GRADALL®

Illustrated Parts Manual

Models
532C-6
534C-6

S/N 0188002

P/N - 9112-4051

Revised July 6, 2007

NQA ISO9001 REGISTERED COMPANY

UKAS QUALITY MANAGEMENT 015

JLG®

SECTION 1 — INTRODUCTION

Table of Contents ..... 1-1 thru 1-6
Alphabetical Index ..... 1-7 thru 1-11
Service Kits 1-12
* Part Number Index ..... 1-13 thru 1-30

SECTION 2 — CHASSIS & ATTACHING PARTS

Frame Shrouding & Trim (Starting S/N 0188002) 2-1
Frame Shrouding & Trim (Starting S/N 0288777) 2-1
Frame Shrouding & Trim (Starting S/N0388043 Turbo) 2-1
Rear Axle & Attaching Parts (Starting S/N 0188002) 2-2
Rear Axle & Attaching Parts (Starting S/N 0188214) 2-2
Front Axle Mounting 2-3
Cab Glass (Starting S/N 0288301) 2-4
Cab Glass (Starting S/N 0288777) 2-4

SECTION 3 — BOOM

First Boom Section 3-1
Second Boom Section 3-2
Third Boom Section 3-3
Extension & Retraction Cables 3-4
Quick Switch 3-5

SECTION 4 — ATTACHMENTS

Carriage Assembly 4-1
Quick Switch Mounted Carriage Assembly (Old Style) 4-2
Quick Switch Mounted Carriage Assembly (New Style) 4-2
Buckets 4-3
Slope Piler Carriage 4-4

SECTION 5 — ENGINE & ATTACHING PARTS

Engine Left Side View (532C-6) 5-1
Engine Right Side View (532C-6) 5-2
Engine Left Side View (534C-6) (Starting S/N 0188002) 5-3
Engine Left Side View (534C-6) (Starting S/N 0188251) 5-3
Engine Left Side View (534C-6 Turbo) (Starting S/N 0388043) 5-3

** Changed the page number for the Page Number Index from 1-31 to 1-30.*

SECTION 5 — ENGINE & ATTACHING PARTS (continued)

Engine Right Side View (534C-6) (Starting S/N 0188002) 5-4
Engine Right Side View (534C-6) (Starting S/N 0188251) 5-4
Engine Right Side View (534C-6 Turbo) (Starting S/N 0388043) 5-4
Fuel Tank & Lines (Starting S/N 0188002) 5-5
Fuel Tank & Lines (Starting S/N 0388012) 5-5
Radiator & Hoses (Starting S/N 0188002) 5-6
Radiator & Hoses (Starting S/N 0388043 Turbo) 5-6
Air Cleaner Piping (Starting S/N 0188002) 5-7
Air Cleaner Piping (Starting S/N 0288777) 5-7
Air Cleaner Piping (Starting S/N 0388043 Turbo) 5-7
Air Cleaner 5-8
Exhaust System (Starting S/N 0188002) 5-9
Exhaust System (Starting S/N 0388043 Turbo) 5-9

SECTION 6 — DRIVE TRAIN

Front Axle Assembly 6-1
Front Axle Housing 6-2
Front Axle Differential Carrier 6-3
Brake Assembly 6-4
Front Axle Shaft & Planetary Wheel End 6-5
Rear Steering Axle Drive Hub (534C-6) (Starting S/N 0188002) 6-6
Rear Steering Axle Drive Hub (534C-6) (Starting S/N 0288568) 6-6
Rear Steering Axle Non-Drive Hub (532) 6-7
Wheels & Tires 6-8

SECTION 7 — CONTROLS

Tilt & Sway 7-1
Lift & Crowd 7-2
Accelerator Linkage(Starting S/N 0188002) 7-3
Accelerator Pedal Assembly (Starting S/N 0288777) 7-3
Steering Column - Reversing Master Switch (Starting S/N 0188002) 7-4
Steering Column - Reversing Master Switch (Starting S/N 0288777) 7-4
Steering Column (Starting S/N 0188002) 7-5
Floorplate Assembly (Starting S/N 0288777) 7-6
Brake & Inching Linkage (Starting S/N 0188002) 7-7
Brake & Inching Linkage (Starting S/N 0288777) 7-7

SECTION 8 — BRAKES

Service Brake Lines. 8-1
Service Brake 8-2
Brake & Inching Linkage (SEE PAGE 7-7) 8-3
Inching & Parking Brake Lines (532C-6) (Starting S/N 0188002) 8-4
Inching & Parking Brake Lines (532C-6) (Starting S/N 0188166) 8-4
Inching & Parking Brake Lines (534C-6) (Starting S/N 0188002) 8-5
Inching & Parking Brake Lines (534C-6) (Starting S/N 0188166) 8-5
Inching & Parking Brake Lines (534C-6) (Starting S/N 0188251) 8-5
Inching & Parking Brake Lines (534C-6) (Starting S/N 0288777) 8-5

SECTION 9 — HYDRAULIC CIRCUITS

Oil Supply & Pressure Lines 9-1
Dump Circuit (534C-6) (Starting S/N 0188002) 9-2
Dump Circuit (534C-6 Turbo) (Starting S/N 0388043) 9-2
Dump Circuit (532C-6) 9-3
Drive Circuit (532C-6) (Starting S/N 0188002) 9-4
Drive Circuit (532C-6) (Starting S/N 0188256) 9-4
Drive Circuit - Front (534C-6) (Starting S/N 0188002) 9-5
Drive Circuit - Front (534C-6) (Starting S/N 0188251) 9-5
Drive Circuit - Rear (534C-6) (Starting S/N 0188002) 9-5
Drive Circuit - Rear (534C-6 (Starting S/N 0188251) 9-5
Drive Circuit - Rear (534C-6 Turbo) (Starting S/N 0388043) 9-5
Lift Cylinder 9-6
Crowd Cylinder 9-7
Tilt & Tilt Compensating Cylinder 9-8
Sway Cylinder (Starting S/N 0188002) 9-9
Swary Cylinder (Starting S/N 0388043 Turbo) 9-9
Steering Cylinder (Starting S/N 0188002) 9-10
Steering Cylinder (Starting S/N 0288032) 9-10
Joystick Circuit (Starting S/N 0188166) 9-11
Joystick Circuit (Staring S/N 0288777) 9-11

SECTION 10 — HYDRAULIC COMPONENTS

Lift Cylinder (Seitz) 10-1
Lift Cylinder (Iowa) 10-1

SECTION 10 — HYDRAULIC COMPONENTS (continued)

Crowd Cylinder (Starting S/N 0188002) 10-2
Crowd Cylinder (Starting S/N 0188153) 10-2
Tilt Cylinder(534C-6) (Seitz) 10-3
Tilt Cylinder (534C-6) (Iowa) 10-3
Tilt Cylinder (532C-6) 10-4
Compensating Cylinder (534C-6) (Seitz) 10-5
Compensating Cylinder (534C-6) (Iowa) 10-5
Compensating Cylinder (532C-6) 10-6
Sway Cylinder (Seitz) 10-7
Sway Cylinder (Iowa) 10-7
Steering Cylinder (Seitz) 10-8
Steering Cylinder (Iowa) 10-8
Main Hydraulic Control Valve (Starting S/N 0188002) 10-9
Main Hydraulic Control Valve (Starting S/N 0188166) 10-9
Main Hydraulic Control Valve (Starting S/N 0288568) 10-9
Rear Drive Motor (534C-6) 10-10
Priority Flow Control Valve 10-11
Flow Divider Valve 10-12
Brake Valve 10-13
Solenoid Valve (Starting S/N 0188002) 10-14
Solenoid Valve (Starting S/N 0288777) 10-14
Dual P.O. Check Valve 10-15
Inching Valve 10-16
Main Hydraulic Pump 10-17
Hydrostatic Transmission Pump (Starting S/N 0188002) 10-18
Hydrostatic Transmission Pump (Starting s/N 0288568) 10-18
Front Drive Motor (532C-6) 10-19
Front Drive Motor (534C-6) 10-20
Manifold Assembly (534C-6) 10-21
Hydraulic Reservoir & Filters 10-22
Steering Orbitrol (Starting S/N 0188002) 10-23
Steering Orbitrol (Starting S/N 0288032) 10-23
Joystick Assembly 10-24
Traction Lock Valve (534C-6) (Starting S/N 0188251) 10-25
Traction Lock Valve (534C-6) (Starting S/N 0288568) 10-25
*Thermal Bypass Valve 10-26

SECTION 11 — ELECTRICAL

Engine Wiring (532C-6) (Starting S/N 0188002) 11-1
Engine Wiring (532C-6) (Starting S/N 0288777) 11-1
Engine Wiring (534C-6) (StartingS/N 0188002) 11-2
Engine Wiring (534C-6) (Starting S/N 0288777) 11-2
Dash Panel (532C-6) (Starting S/N 0188002) 11-3
Dash Panel (532C-6) (Starting S/N 0288777) 11-3
Dash Panel (534C-6) (Starting S/N 0188002) 11-4
Dash Panel (534C-6) (Starting S/N 0288777) 11-4
Battery & Cables (Starting S/N 0188002) 11-5
Battery & Cables (Starting S/N 0288636) 11-5
Gauge Panel Assembly (532C-6) (Starting S/N 0288777) 11-6
Gauge Panel Assembly (534C-6) (Starting S/N 0288777) 11-7
Dash Harness (532C-6) (Starting S/N 0288777) 11-8
Dash Harness (534C-6) (Starting S/N 0288777) 11-9

SECTION 12 — MISCELLANEOUS

Complete Decal List by Model 12-1
Frame Decals (Starting S/N 0188002) 12-2
Frame Decals (Starting S/N 0288777) 12-2
Frame Decals (Starting S/N 0388043 Turbo) 12-2
Boom Decals (Starting S/N 0188002) 12-3
Boom Decals (Starting S/N 0388043 Turbo) 12-3

SECTION 13 — OPTIONAL EQUIPMENT

Ether Starting Kit (9108-5054). 13-1
Ether Starting Kit (9108-5105) 13-1
Ether Starting Kit (9132-5003) 13-1
Left Hand Tilt/Sway Control (9108-5046) 13-2
Glow Plug Installation (9108-5059) 13-3
Glow Plug Installation (9114-5033) 13-3
Vandal Cover (9112-5016) 13-4
Vandal Kit (9108-5102) 13-4
Work Light Package (9112-5018) 13-5
Work Light Package (9114-5021) 13-5
Quick Hook Assembly (9108-5056) 13-6
Auxiliary Hydraulics (9112-5011) 13-7
Auxiliary Hydraulics W/Electrics (9112-5043) 13-7
Cab Enclosure (9108-5050) 13-8
Cab Enclosure (9114-5050) 13-8

* *Moved pages 13-7 & 13-8 to page 1-5 and added pages 13-41 & 13-42 to page 1-6.*

SECTION 13 — OPTIONAL EQUIPMENT (continued)

Slope Piler Carriage (9108-5058) 13-9
Sway Cylinder (9108-3286) 13-10
Dual P.O. Check Valve (9108-3262) 13-11
Six Foot Mast (9045-5035 & 9045-5037) 13-12
Drywall 100 Degree Swing Forks (9055-5013) 13-13
Swing Cylinder (9108-3366) 13-14
100 Degree Swing Forks (9045-5044) 13-15
Deluxe Light Package (9108-5062) 13-16
Deluxe Light Package (9108-5104) 13-16
Beacon Light Package (9112-5021) 13-17
Beacon Light Package (9112-5042) 13-17
Drywall Carriage Assembly (9045-5043) 13-18
Rear Axle Stabilization (9112-5007) 13-19
Stabilizer Cylinder (9104-3303) 13-20
Joystick Installation (9112-5023) 13-21
Joystick Assembly (9112-3078) 13-22
Pintle Hook (9103-5101) 13-23
Tilt on Joystick (9108-5072) 13-24
Tilt on Joystick (9108-5107) 13-24
Winch Installation (9112-5022) 13-25
Block Heater (9104-3353) 13-26
L.H. Sway Control (9112-5044) 13-27
Thermal Bypass (9112-5054)(extreme cold) 13-28
Inline Bypass - 534C6 (9112-5056) 13-29
Inline Bypass - 534C6-Turbo (9132-5011) 13-30
Hydraulic Reservoir Heater (9108-5073) 13-31
42 Foot Boom Option (9112-5072) 13-32
42 Foot Boom Option *(TURBO)* (9132-5019) 13-32
42 Foot Boom Assembly (9112-5058) 13-33
Lift Cylinder - 42 Foot Boom (9112-3141) 13-34
Stabilizer Cylinder - 42 Foot Boom (9116-3045) 13-35
Compensating Cylinder - 42 Foot Boom (9112-3143) 13-36
Stabilizer Valve - 42 Foot Boom (9116-3164) 13-37
Stabilizer Proximity Sensor Assembly 13-38
Auxiliary Hydraulics - 42 Foot Boom (9112-5082) 13-39
Winch Installation-42 Foot Boom(9112-5092) 13-40
Foam Tire Option - 42 Foot Boom (9112-5105) 13-41
Rear Axle Rework Kit (9114-5136) 13-42
Rear Axle Advantage Kit (9133-5026) 13-43
* 5-Button Handle (9103-3387) 13-44

* *Added page 13-44.*

ACCELERATOR CABLE 7-3
ACCELERATOR PEDAL 7-3
AIR CLEANER 5-8
AIR CLEANER ELEMENT 5-8
AIR CLEANER SERVICE INDICATOR 5-7
ALTERNATOR 5-2, 5-4, 11-1, 11-2
ALTERNATOR FAN 5-2, 5-4
ATTACHMENTS 4-1
AUXILIARY HYDRAULICS 13-7
AUXILIARY HYDRAULICS (42' BOOM) 13-39

BATTERY 11-5
BATTERY HOLD DOWN 11-5
BATTERY CABLES 11-5
BEACON LIGHT PACKAGE 13-17
BEARING PADS (Boom Sections) 3-1, 3-2, 3-3
BLOCK HEATER 13-26
BOOM DECALS 12-3
BOOM SECTIONS 3-1, 3-2, 3-3
BOOM, OPTIONAL (42') ..... 13-32 thru 13-38
BRAKE PEDAL 8-3
BRAKE VALVE 10-13
BRAKE WARNING LIGHT 11-3
BREATHER (Filler cap) 10-22
BUCKETS 4-3

CAB ENCLOSURE 13-8
CARRIAGE & FORKS 4-1
CIRCUIT BREAKERS 11-3
COMPENSATING CYLINDER 10-5
COMPENSATING CYLINDER HYDRAULIC CIRCUIT 9-8
COMPENSATING CYLINDER (42' BOOM) 13-36
CONTROL VALVES 10-9, 10-11, 10-12
CROWD CYLINDER 10-2
CROWD CYLINDER HYDRAULIC CIRCUIT 9-7

DASH HARNESS 11-8, 11-9
DECALS 12-1, 12-2, 12-3
DECK 2-1
DELUXE LIGHT PACKAGE 13-16
DRIVE BELT 5-2, 5-4
DRIVE CIRCUIT (532C-6) 9-4
DRIVE CIRCUIT (534C-6) 9-5

** Added additional alphabetical index entries.*

DRYWALL CARRIAGE ASSEMBLY 13-18
DRYWALL SWING FORKS 13-13
DUAL P.O. CHECK VALVE 10-15, 13-11
DUMP CIRCUIT 9-2, 9-3

ELECTRICAL SYSTEMS 1-1, 11-2, 11-3, 11-4
ENGINE LEFT SIDE VIEW 5-1, 5-3
ENGINE MOUNT 5-1, 5-3
ENGINE RIGHT SIDE VIEW 5-2, 5-4
ENGINE THROTTLE CONTROL 7-3
ETHER STARTING KIT 13-1
EXHAUST MANIFOLD 5-9
EXHAUST PIPE 5-9
EXHAUST STACK 5-9
EXHAUST SYSTEM 5-9
EXTENSION & RETRACTION CABLE ASSEMBLY 3-4

FAN BELT 5-2, 5-4
FILTERS 5-1, 5-2, 5-3, 5-4, 5-5, 10-22
FILTER ELEMENT 10-22
FIRST BOOM SECTION 3-1
FIRST BOOM SECTION MOUNTING PIN 3-1
FLOORPLATE ASSEMBLY 7-6
FRAME 2-1
FRAME SHROUDING & TRIM 2-1
FRONT AXLE 6-1
FRONT AXLE MOUNTING 2-3
FRONT AXLE DIFFERENTIAL CARRIER 6-3
FRONT AXLE DRIVE MOTOR 10-19, 10-20
FRONT AXLE HOUSING 6-2
FRONT AXLE SHAFT & PLANETARY WHEEL END 6-5
FRONT DISC WHEEL & RIM 6-8
FUEL GAUGE 11-3, 11-4
FUEL LEVEL SENDER 5-5
FUEL LINES 5-5
FUEL TANK & CAP 5-5

GROUND CABLE 5-2, 5-4

HOOD 2-1
HORN 2-1, 11-1, 11-2
HORN BUTTON 11-3, 11-4

* *Added additional alphabetical index entries.*

HORN WIRING 11-1, 11-2
HOURMETER 11-3, 11-4
HYDRAULIC CIRCUITS ..... 9-1 THRU 9-11

IGNITION SWITCH 11-3, 11-4
INCHING VALVE 8-3, 10-16
INLINE BYPASS 13-29, 13-30
INSTRUMENT PANEL 11-3, 11-4

JOYSTICK 10-24

KITS 1-11

LEFT HAND TILT/SWAY CONTROL 13-2
LIFT CYLINDER 10-1
LIFT CYLINDER HYDRAULIC CIRCUIT 9-6
LIFT CYLINDER (42' BOOM) 13-34

MAIN BOOM SECTIONS 3-1, 3-2, 3-3
MAIN HYDRAULIC PUMP 5-1, 5-3, 10-17
MISCELLANEOUS ELECTRICAL COMPONENTS 11-3, 11-4
MUFFLER 5-9

NEGATIVE BATTERY CABLE 11-5

OIL COOLER 5-6, 9-2, 9-3
OIL FILTER 5-2, 5-4, 10-22
OIL PRESSURE GAUGE 11-3, 11-4
OIL PRESSURE SENDER 5-1, 5-3, 11-1, 11-2
OIL RESERVOIR 10-22
OIL SUPPLY & PRESSURE LINES 9-1

PINTLE HOOK 13-23
POSITIVE BATTERY CABLE 11-5
PRIORITY FLOW CONTROL VALVE 10-11

QUICK SWITCH ASSEMBLY 3-5
QUICK SWITCH MOUNTED CARRIAGE ASSEMBLY 4-2

RADIATOR & HOSES 5-6
REAR AXLE FRAME 2-2
REAR AXLE MOUNTING PIN 2-2
REAR DRIVE MOTOR. 10-10

* *Added additional alphabetical index entries.*

REAR STEERING AXLE 2-2
REAR STEERING AXLE DRIVE HUB 6-6
REAR STEERING AXLE NON DRIVE HUB 6-7
REPAIR KITS 1-11
RESERVOIR FILLER-BREATHER 10-22
RESERVOIR SUPPLY CIRCUIT 9-1
RESERVOIR 10-22
RESERVOIR FILTER 10-22
RESERVOIR HEATER 13-31
RETRACTION CABLE 3-4
REVERSING MASTER SWITCH 7-4

SEAT 2-1
SEAT BELT 2-1
SECOND BOOM SECTION 3-2
SERVICE BRAKE LINES 8-1
SERVICE KITS 1-11
SIX FOOT MAST 13-12
SLOPE PILER CARRIAGE. 13-9
SOLENOID VALVES 10-14
STABILIZER CYLINDER (42' BOOM) 13-35
STABILIZER VALVE (42' BOOM) 13-37
STARTER MOTOR 5-2, 5-4, 11-1, 11-2
STEERING COLUMN 7-5
STEERING CYLINDER 10-8
STEERING CYLINDER HYDRAULIC CIRCUIT 9-10
STEERING KNUCKLES 2-2
STEERING ORBITROL 7-4, 10-23
STEERING WHEEL 7-5
SUPPLY HYDRAULIC CIRCUIT 9-1
SWAY CONTROL HANDLE & LINKAGE 7-1
SWAY CYLINDER 10-7
SWAY CYLINDER HYDRAULIC CIRCUIT 9-9
SWING CYLINDER 13-14
SWING FORKS (100 DEGREE) 13-15

THERMAL BYPASS 13-28
THIRD BOOM SECTION 3-3
TIE ROD ARM 2-2
TILT CONTROL HANDLE & LINKAGE 7-1
TILT CYLINDER 10-3, 10-4
TILT CYLINDER HYDRAULIC CIRCUIT 9-8

* *Added additional alphabetical index entries.*

TILT ON JOYSTICK 13-24
TRACTION LOCK VALVE 10-25
TRAVEL ALARM 11-1, 11-2

WATER TEMPERATURE GAUGE 11-3, 11-4
WATER TEMPERATURE SENDER 5-2, 5-4
WHEELS & TIRES 6-8
WINCH INSTALLATION 13-25
WIRING HARNESS 5-1, 5-3, 11-1, 11-2

** Added additional alphabetical index entries, page 11 has been changed to page 12.*

SECTION	PAGE NO.	DESCRIPTION
5	5-2/5-4	CUMMINS ENGINE FILTER KIT
6	6-4	BRAKE ASSY SPRING KIT
6	6-4	BRAKE ASSY SEAL KIT
6	6-4	BRAKE ASSY LINER KIT
10	10-1	LIFT CYLINDER SEAL KIT
10	10-2	CROWD CYLINDER SEAL KIT
10	10-3	TILT CYLINDER SEAL KIT
10	10-4	TILT CYLINDER SEAL KIT
10	10-5	COMPENSATING CYLINDER SEAL KIT
10	10-6	COMPENSATING CYLINDER SEAL KIT
10	10-7	SWAY CYLINDER SEAL KIT
10	10-8	STEER CYLINDER SEAL KIT
10	10-9	SPOOL SEAL KIT (Main Hydraulic Control Valve)
10	10-9	LOAD CHECK PLUG SEAL KIT (Main Hydraulic Control Valve)
10	10-9	RELIEF SEAL KIT (Main Hydraulic Control Valve)
10	10-9	RELIEF SERVICE KIT (Main Hydraulic Control Valve)
10	10-9	VALVE SECTION SEAL KIT (Main Hydraulic Control Valve)
10	10-9	STUD KIT (Main Hydraulic Control Valve)
10	10-13	BRAKE VALVE REPAIR KIT
10	10-15	DUAL P.O. CHECK VALVE SEAL KIT
10	10-16	INCHING VALVE SEAL KIT
10	10-18	COMPLETE SEAL KIT (Hydrostatic Transmission Pump)
10	10-19/10-20	FRONT AXLE DRIVE MOTOR SEAL KIT
10	10-19/10-20	SWIVEL TIME ORIFICE KIT
10	10-23	STEERING ORBITROL SEAL KIT
12	12-1	532C-6/534C-6 COMMON DECAL KIT

** Changed page number from page 11 to 12 for additional alphabetical index entries.*

INDEX

PART NUMBER	PAGE
0510-1441	4-4, 13-9
1100-2410	13-2
1440-2248	2-1, 13-7, 13-33, 13-39
1440-3190	13-8
1440-3416	11-5
1440-4645	12-2
1440-4646	12-2
2443-1386	13-12
2460-1570	2-2, 13-43
2460-4126	12-2
2464-1328	13-8
2474-1047	5-1, 5-3, 11-1, 11-2
2477-1004	11-4, 11-6, 11-7, 13-3
2486-1120	11-3, 11-4
2486-1167	13-5, 13-16
2486-1170	5-1, 5-2, 5-3, 5-4, 9-4, 11-4, 13-3
2492-1332	5-7
2492-1393	2-1, 11-1, 11-2
2492-1394	2-1
2492-1395	2-1
7149-2134	2-1
7702-3006	12-2
7702-3007	12-2
7702-3009	12-3, 13-32
7710-3138	5-7
7710-4289	6-2
7710-4297	6-3
7710-4343	6-2, 6-5
7713-3052	9-2, 9-3, 9-4, 9-5, 9-7, 9-10, 13-6, 13-33
7713-3053	9-2, 9-3, 9-4, 9-5, 13-6
7713-3073	9-10
7713-3089	5-1, 5-3, 8-1, 8-5, 9-1, 9-4, 9-5
7713-3133	13-28
7713-3134	13-28
7713-3137	9-5, 9-9
7713-3139	9-6, 9-9
7713-3140	9-2, 9-6, 9-9, 13-7, 13-13, 13-15
7713-3141	13-7
7713-3145	13-19, 13-32
7713-3166	9-1
7713-3168	13-7
7713-3177	9-2, 9-6, 9-9, 13-7, 13-13, 13-15
7713-3197	8-4, 8-5, 9-11, 13-21
7713-3201	13-13, 13-15
7713-3209	9-5, 9-7, 9-10, 13-6, 13-33
7713-3248	10-15, 13-11
7713-3270	13-6
7713-3279	9-5, 9-9
7713-3306	9-5
7713-3389	13-28
7713-3390	9-5, 13-28
7713-3430	8-5
7713-3447	5-3, 9-5
7713-3893	9-7, 13-33
7714-3003	2-1, 5-6, 9-11, 11-3, 11-4, 11-5
7714-3004	13-8
7714-3006	2-1, 5-6, 9-11, 11-3, 11-4, 11-5, 13-8, 13-19, 13-32
7714-3015	4-4, 9-2, 11-5, 13-9
7714-3016	13-8
7714-3017	13-8
7716-3102	13-5
7716-3117	13-1
7716-3144	11-3
7721-3031	5-9
7732-3029	9-5
7733-3027	12-2
7734-3018	12-2
7736-3079	13-6
7736-3191	13-5, 13-16
7736-3225	11-8, 11-9, 11-10
7736-3263	11-8, 11-9, 11-10
7736-3264	11-8, 11-9, 11-10
7736-3268	11-3, 11-4, 13-3, 13-5, 13-8, 13-17
7736-4316	10-24
7738-3154	5-7
7738-3202	5-1, 5-2, 5-3, 5-4
7738-3203	5-1, 5-2, 5-3, 5-4
7738-3410	13-5, 13-16
7738-3467	11-7, 13-1, 13-5, 13-16, 13-17
7738-3470	11-6, 11-7, 13-1, 13-3, 13-5, 13-8, 13-16, 13-17
7738-3540	13-8
7738-3567	11-5
7738-3709	11-3, 11-4, 11-6, 11-7
7738-3744	13-8
7738-4267	10-14
7738-6065	5-5
8000-3152	10-2
8000-3337	10-2
8060-3019	12-3
8060-3022	12-2
8060-3026	12-2
8091-4235	10-19, 10-21
8091-4241	10-19, 10-21
8093-4035	10-14
8093-4037	13-24
8093-4052	10-18
8093-4077	10-18
8093-4080	10-19, 10-21
8093-4082	10-18
8093-4084	10-18
8093-4202	10-16
8093-4205	10-25
8093-4226	10-24
8093-4228	10-24
8093-4230	10-24
8093-4231	10-24
8093-4233	10-24
8093-4238	13-22
8093-4240	10-24
8093-4241	13-22
8093-4245	10-24
8093-4246	10-24
8093-4247	10-24
8093-4248	10-24
8093-4249	10-24
8093-4253	10-24
8093-4254	10-24
8093-4256	10-24
8093-4257	10-24
8093-4258	10-24
8093-4259	10-24
8093-4260	10-24
8093-4261	10-24
8093-4262	10-24
8093-4263	10-24
8093-4340	10-18
8093-4416	10-18
8093-4423	10-16
8096-3050	13-5
8096-3055	13-5, 13-16
8096-3056	13-5
8096-3057	7-4, 11-1, 11-2, 11-8, 11-9, 11-10, 13-1
8096-3058	11-1, 11-2, 11-8, 11-9, 13-1, 13-5, 13-8
8096-3059	7-4
8096-3060	11-8, 11-9, 13-16, 13-24
8096-3062	13-5, 13-16, 13-19, 13-38
8096-3065	13-1
8096-3066	7-4, 11-8, 11-9, 11-10, 13-5, 13-16, 13-19, 13-38

* *Complete revision of index.*

INDEX

PART NUMBER	PAGE
8096-3067	13-8, 13-16, 13-24
8096-3068	7-4, 11-8, 11-9, 11-10, 13-1, 13-5, 13-16
8096-3069	11-8, 11-9, 13-1, 13-5, 13-8, 13-16, 13-19, 13-24, 13-38
8097-4021	10-26
8203-3993	13-7, 13-19
8203-3996	11-1, 11-2, 13-5
8307-3699	6-2, 6-3
8307-3828	6-3
8308-1152	6-5
8319-1004	5-2, 5-3, 5-4
8319-1005	5-2, 5-4
8319-1006	5-2, 5-4
8319-1007	5-2, 5-4
8319-1010	5-1, 5-2, 5-3, 5-4
8319-1011	5-2, 5-4
8319-1012	5-3
8319-1013	5-2, 5-4, 5-9
8319-1021	5-2, 5-4, 5-9
8319-1032	5-1, 5-3, 5-4
8319-1035	5-3
8319-1038	13-1
8319-1039	5-3
8319-1041	5-1, 5-3
8319-1057	5-1, 5-3
8319-1059	7-4
8320-1006	2-2
8320-1017	9-7, 13-33
8320-1024	13-13, 13-15
8320-1026	3-4, 13-13, 13-15, 13-33
8320-1031	2-3
8320-1038	9-7, 13-33
8320-1039	9-7, 13-33
8320-1053	13-25, 13-40
8320-1058	6-1
8320-1073	3-4, 13-19
8320-1120	9-4, 9-5, 13-23
8320-1123	3-5, 9-8, 13-7, 13-33, 13-39
8320-1135	5-1, 5-2, 5-3, 5-4, 9-4, 9-5
8320-1140	2-2, 13-43
8320-1144	2-2, 13-43
8320-1155	5-4, 9-5
8325-1287	5-6, 9-2
8348-1285	11-1, 11-2, 11-10
8348-1286	11-1, 11-2, 11-10
8348-1289	11-8, 11-9
8348-3078	13-8
8348-3113	7-4
8348-3114	7-4, 11-3, 11-4
8348-3497	5-5
8348-3584	6-3
8360-1011	12-2
8362-1283	3-3, 9-8, 13-33
8362-3032	5-6, 9-2, 10-22
8363-3002	8-1
8364-1359	13-4
8364-1675	12-2
8365-1133	5-4, 9-2, 9-5
8366-1145	13-8
8366-1260	13-28
8366-1316	4-4, 9-1, 13-9
8366-1336	13-16
8366-2008	9-1
8366-3097	13-5, 13-16
8368-3175	5-4, 5-9
8368-3181	13-8
8368-3254	11-1, 11-2
8368-3291	2-1
8368-3308	5-6
8368-4127	6-5
8381-4054	10-25
8381-4056	10-25
8392-4123	10-19, 10-20, 10-21
8392-4135	10-19, 10-20
8452-1056	5-6
8452-1062	4-4, 13-9
8471-2738	5-1, 5-2, 5-3, 5-4, 9-4, 9-5
8471-2739	9-4, 9-5
8471-2746	5-5
8471-4006	9-4
8471-6029	13-28
8471-6358	8-3, 8-5
8471-6359	13-25, 13-40
8471-6397	13-28
8471-6426	13-19
8471-6434	4-4, 13-9
8471-6726	8-4, 8-5
8471-7341	5-4, 8-4, 8-5, 9-4, 9-5
8471-7453	13-40
8471-7458	8-5, 9-11, 13-21
8471-7519	9-11, 13-21
8471-7524	5-4, 9-5
8471-7537	8-5, 13-24
8471-7571	13-28
8471-7597	5-3, 9-5
8471-7640	13-12
8471-7803	9-1
8471-7810	9-2, 9-3, 9-4, 9-10
8471-7817	8-3, 8-5
8471-7830	9-4, 9-5
8471-7832	9-1, 9-2, 9-4, 9-5
8471-7839	5-4, 9-2, 9-3
8471-7852	5-3, 5-4, 8-3, 8-4, 8-5, 9-4
8471-7853	8-3, 8-4, 8-5
8471-7854	9-10
8471-7858	9-10
8471-7859	9-8
8471-7860	9-6
8471-7861	9-9
8471-7862	9-7, 13-33
8471-7863	9-7, 13-33
8471-7869	8-3, 8-4, 8-5
8471-7872	5-6, 9-2, 9-3, 9-4, 13-29
8471-7887	13-19
8471-7888	13-19
8471-7889	8-3, 8-4, 8-5
8471-7890	8-3, 8-4, 8-5
8471-7892	8-3
8471-7893	8-5
8471-7894	9-8, 13-7
8471-7895	9-8, 13-7
8471-7896	9-8, 13-33
8471-7897	9-4, 9-5
8471-7898	9-5
8471-7899	9-5
8471-7905	5-3, 8-4
8471-7906	9-2, 9-3, 9-4, 13-28, 13-29
8471-7907	5-1, 5-3, 9-1
8471-7908	9-2, 9-3
8471-7911	9-4, 9-5
8471-7913	9-4, 9-5
8471-7930	5-4, 9-2, 9-5
8471-7931	9-1
8471-7983	9-4, 9-5
8471-8021	8-1, 8-5
8471-8040	13-7, 13-39
8471-8041	13-7, 13-39
8471-8042	13-6
8471-8067	13-13, 13-15
8471-8077	8-1
8471-8129	5-3
8471-8145	13-25, 13-40
8471-8147	13-25
8471-8149	13-25
8471-8159	13-25, 13-40
8471-8181	9-5

* *Complete revision of index.*

INDEX

PART NUMBER	PAGE
8471-8182	9-2, 9-5
8471-8183	9-2, 9-5
8471-8202	9-10
8471-8203	9-10
8471-8204	9-10
8471-8207	5-3, 9-5
8471-8208	5-4, 9-5
8471-8221	5-4, 9-5, 13-24
8471-8287	13-19, 13-32
8471-8314	13-25, 13-40
8471-8474	9-4, 9-5
8471-8527	9-4, 9-5
8471-8548	13-25, 13-40
8471-8597	9-5
8471-8643	5-6, 9-2, 13-30
8471-8644	9-2, 13-30
8471-8645	9-9
8471-8658	9-4, 9-5
8471-8756	9-2, 9-5
8471-8757	9-2, 9-5
8471-8758	5-3, 9-1
8471-8854	9-4
8471-8882	9-5
8471-8903	8-1, 8-4, 8-5
8471-8912	9-2, 13-30
8471-8925	13-29, 13-30
8471-8926	13-29
8471-8931	9-4, 9-5
8471-8934	9-5
8471-8946	9-5
8471-8953	13-33, 13-39
8471-8954	13-33, 13-39
8471-8957	9-2
8471-8958	9-2
8471-8989	13-19, 13-32
8471-8999	9-2, 9-3, 9-5
8471-9047	5-3
8471-9096	13-40
8471-9110	9-2, 9-3, 9-4
8505-1384	9-11, 13-21
8507-1128	5-6
8510-1098	2-2
8521-1040	2-1
8540-1340	5-3
8540-3040	13-33
8561-1278	5-6
8564-1094	13-4
8584-1094	5-3
8584-1150	5-4, 9-2
8594-1016	5-2, 5-4, 5-6
8594-1017	5-3, 11-5
8654-1381	5-5
8656-1308	9-7, 13-33
8656-1326	13-5, 13-16
8662-1230	9-4, 13-16, 13-19, 13-32
8664-1158	3-4, 13-33
8668-1572	2-2
8668-3088	13-33
8668-3118	7-3
8668-3122	13-5, 13-16, 13-17
8668-3127	13-16
8668-3136	13-16
8668-3193	13-8
8668-3330	13-3
8668-3381	13-16
8668-3480	5-4, 7-4, 13-5, 13-8, 13-16, 13-17
8688-1227	5-1, 5-3
8688-1273	3-4
8688-1276	3-4
8688-1421	6-4
8688-3071	13-5
8688-3075	5-1, 5-3
8688-3106	5-1, 5-3, 5-4, 5-6
8688-3193	13-8
8688-3260	5-4, 13-5
8688-3327	5-6
8688-3469	9-1
8692-1268	2-2, 13-42, 13-43
8692-1327	5-6, 9-2
8696-1044	13-4
8698-1178	13-5, 13-16
8698-3041	13-5
8698-3188	11-3, 11-4, 13-5, 13-8, 13-16
8698-3190	13-3
8698-3193	13-7, 13-16
8698-3195	13-1
8698-3202	13-1
8698-3649	5-3
8698-4451	6-5
8698-4452	6-5
8820-1001	2-1, 13-8
8820-1002	13-1, 13-16
8820-1003	5-4, 7-3, 9-4, 13-8
8820-1004	13-21
8820-1005	5-1, 5-3, 13-1, 13-6, 13-7, 13-8
8820-1008	7-4, 8-3, 8-4, 8-5, 9-5, 13-13, 13-15
8820-1010	9-2, 9-3, 9-4
8820-1011	13-24
8820-1016	5-6, 13-3
8820-1017	2-1, 13-7
8820-1018	5-2, 5-7, 9-5, 9-11, 13-5, 13-7, 13-21, 13-39
8820-1019	13-7, 13-39
8820-1020	2-1, 5-3, 5-4, 5-6, 5-7, 9-8, 10-22, 13-33
8820-1021	5-6
8820-1022	7-7
8820-1023	9-5, 9-9
8820-1024	7-7, 13-28
8820-1031	5-9
8820-1033	7-4, 7-5
8820-1034	3-4, 5-6, 9-8, 13-6, 13-7, 13-33, 13-39
8820-1035	2-2, 7-4, 7-5, 9-5, 13-5, 13-16, 13-43
8820-1036	9-5, 10-22, 13-7, 13-16, 13-39
8820-1037	5-6, 7-5, 13-12, 13-16, 13-25, 13-40
8820-1040	4-4, 9-9, 13-9
8820-1043	3-4, 10-26, 13-33
8820-1044	13-19, 13-28
8820-1046	3-4
8820-1047	13-19, 13-32
8820-1050	2-1
8820-1064	13-25, 13-40
8820-1065	2-2, 3-3, 3-5, 4-4, 9-6, 9-8, 13-9, 13-25, 13-32, 13-33, 13-35, 13-40
8820-1066	4-1, 5-4, 9-4, 13-32, 13-35
8820-1067	2-1, 5-6
8820-1069	13-25, 13-40
8820-1071	13-25, 13-40
8820-1103	7-7
8820-1104	9-9
8820-1105	4-1, 4-2, 4-4, 13-9, 13-13, 13-15, 13-18
8820-1106	5-1, 5-3
8820-1107	3-1, 3-5
8820-1108	13-5
8820-1112	5-1, 5-3, 5-4
8820-1142	2-1
8820-1510	13-27
8820-1532	3-1, 3-2, 3-3, 3-4, 13-33
8820-1534	3-1, 3-2, 3-3, 13-33
8820-1535	3-1, 3-2, 3-3, 13-33
8820-1536	3-1, 4-4, 13-9, 13-33
8820-1537	4-4, 13-9

* *Complete revision of index.*

INDEX

PART NUMBER	PAGE
8820-1538	3-2, 13-33
8820-1562	3-2, 13-33
8820-1563	13-33
8820-1564	3-1, 3-2, 13-33
8820-1565	3-2, 3-3, 13-33
8820-1566	3-2, 3-3, 13-33
8820-1568	3-1, 13-33
8820-1608	3-1, 13-33
8820-4912	2-1
8821-1030	13-8
8821-1068	5-1, 5-3, 5-4, 10-2
8821-1117	2-2, 13-42
8821-1121	2-2, 13-42, 13-43
8821-1510	13-8
8821-2224	2-1
8821-2228	7-7, 10-16
8821-2321	2-2, 13-42, 13-43
8822-1701	2-2
8824-1053	13-13, 13-18
8825-1018	7-3
8826-1017	9-11
8826-1022	11-4
8826-1024	7-7
8830-1070	13-8
8830-1075	11-6, 11-7
8830-1093	2-1, 13-19, 13-32, 13-38
8830-1099	13-19
8830-1126	13-4
8830-1141	11-3, 11-4, 13-2
8830-1191	13-16
8830-1193	2-1, 3-5, 13-8
8830-1311	7-4, 7-5
8832-1020	13-8
8832-1022	13-5, 13-16
8832-1029	11-4
8832-1030	2-1
8832-1039	10-22, 13-5, 13-8, 13-16
8834-1022	2-1, 4-1, 4-2, 4-4, 12-2, 13-6, 13-9, 13-12, 13-13, 13-15, 13-18
8844-1001	7-7
8850-1004	7-3, 9-2, 9-3, 9-4, 9-11, 13-1, 13-8, 13-16, 13-17, 13-21, 13-24
8850-1005	2-1, 5-2, 5-3, 5-4, 7-7, 9-5, 9-8, 9-11, 13-7, 13-21, 13-33, 13-39
8850-1006	2-2, 3-4, 9-5, 10-22, 11-3, 11-4, 13-5, 13-7, 13-12, 13-13, 13-16, 13-18, 13-19, 13-25, 13-32, 13-39, 13-40, 13-43
8850-1007	2-1
8850-1008	2-1, 7-2, 9-4, 9-8, 13-7, 13-25, 13-33, 13-39, 13-40
8850-1010	3-1, 3-5, 9-9
8850-1012	3-4, 6-1, 9-7, 13-33
8850-1016	4-4, 13-9
8850-1105	7-3
8850-1108	7-2, 9-8, 13-7, 13-33, 13-39
8850-1110	2-2, 7-7, 13-43
8850-1112	3-4, 13-7
8850-1304	13-2, 13-27
8850-1314	3-4, 13-33
8850-1404	7-3, 13-7, 13-39
8850-1405	7-7
8850-1406	7-1, 7-2, 7-7
8850-1408	10-13
8850-1414	3-4
8850-1416	2-2, 13-43
8850-1610	11-6, 11-7
8850-1612	2-1
8850-1613	2-1, 5-1, 5-3, 11-3, 11-4, 13-8, 13-16
8850-1616	5-1, 5-3, 7-4, 7-5
8852-1010	5-1, 5-3
8852-1016	2-3, 4-4, 13-9
8852-1204	2-1
8852-1205	5-6
8852-1206	5-6, 13-19
8852-1208	2-2, 3-4, 13-33, 13-42, 13-43
8852-1304	13-4, 13-7
8852-1305	5-7
8852-1306	2-2, 3-4, 13-33, 13-43
8852-1310	4-1, 4-2, 4-4, 13-9, 13-13, 13-15, 13-18
8852-1312	2-2, 13-43
8852-1604	13-8
8855-1004	13-24
8855-1007	2-1, 13-8, 13-16, 13-19, 13-32, 13-38
8855-1009	5-1, 5-3, 5-4, 7-3, 8-3, 8-4, 8-5, 9-2, 9-3, 9-4, 9-5, 9-11, 13-1, 13-2, 13-8, 13-16, 13-21, 13-27
8855-1010	2-1, 5-2, 5-3, 5-4, 5-6, 7-7, 9-8, 9-11, 11-3, 11-4, 13-2, 13-3, 13-5, 13-7, 13-21, 13-33, 13-39
8855-1011	2-2, 3-4, 4-4, 5-1, 5-3, 5-4, 5-6, 5-9, 7-4, 7-5, 9-5, 9-9, 10-22, 10-26, 13-5, 13-6, 13-7, 13-9, 13-12, 13-13, 13-16, 13-18, 13-19, 13-25, 13-28, 13-32, 13-33, 13-39, 13-40, 13-43
8855-1012	5-1, 5-2, 5-3, 5-4, 9-4, 9-5
8855-1013	2-1, 2-2, 3-3, 3-5, 4-1, 4-4, 5-4, 5-6, 9-4, 9-5, 9-6, 9-8, 13-9, 13-23, 13-25, 13-32, 13-33, 13-35, 13-40
8855-1016	5-1, 5-3, 13-5
8855-1109	2-2, 3-4, 13-42
8855-1153	2-2, 13-42, 13-43
8855-4900	2-1
8855-4917	11-3, 11-4, 13-8
8856-1001	9-5, 13-19, 13-32, 13-38
8856-1002	13-6, 13-13, 13-15
8856-1003	2-1, 5-6, 10-22
8856-1004	10-22, 13-12, 13-16, 13-25, 13-40
8856-1005	10-22
8856-1006	5-6, 11-4
8856-1011	2-1
8856-1013	9-4, 9-5
8856-1017	9-2
8856-1104	11-6, 11-7, 13-8
8856-1105	3-5
8856-1107	2-1, 7-3, 8-3, 8-4, 8-5, 9-2, 9-3, 9-4, 13-1, 13-8
8856-1108	5-1, 5-2, 5-3, 5-4, 5-7, 9-5, 12-3, 13-5
8856-1109	3-1, 3-2, 3-3, 3-4, 4-4, 5-2, 5-3, 5-4, 5-6, 7-3, 9-8, 13-5, 13-7, 13-9, 13-16, 13-33, 13-39
8856-1111	2-1, 3-4, 3-5, 5-2, 5-4, 5-6, 7-3, 9-4, 9-8, 13-32, 13-33, 13-35
8856-1113	7-1, 7-2
8856-1115	13-5
8856-1119	2-2
8858-1009	13-11
8858-1136	13-13, 13-15
8858-1140	13-19
8858-1310	3-4, 13-33

* *Complete revision of index.*

INDEX

PART NUMBER	PAGE
8858-1320	9-7, 9-8, 13-7, 13-33, 13-39
8858-1323	2-2, 13-42, 13-43
8859-1005	13-8
8859-1009	10-15
8859-1015	9-10
8859-1019	2-2, 13-43
8859-1020	9-5
8859-1032	2-2, 13-42, 13-43
8859-1036	10-2
8859-1104	2-2, 13-43
8859-1200	2-1
8859-1202	8-3, 8-4, 8-5, 9-4, 9-5, 9-9, 9-10
8859-1204	5-2, 5-4, 6-1, 8-1, 8-3, 8-4, 8-5, 9-2, 9-4, 9-5, 9-10, 9-11, 13-13, 13-15, 13-21, 13-24
8859-1205	5-3, 5-4, 6-1, 8-4, 8-5, 9-4, 9-5, 9-7, 9-8, 9-10, 10-2, 10-11, 10-21, 13-13, 13-15, 13-19, 13-32, 13-33
8859-1206	5-3, 6-1, 8-3, 8-4, 8-5, 9-1, 9-2, 9-3, 9-5, 9-6, 9-7, 9-8, 9-9, 9-10, 10-11, 13-7, 13-19, 13-32, 13-39
8859-1207	5-4, 8-3, 8-4, 8-5, 9-1, 9-2, 9-3, 9-4, 9-5, 9-8, 13-29, 13-30, 13-33
8859-1209	5-1, 5-3, 5-4, 9-1, 9-5, 10-26, 13-28
8859-1210	5-1, 5-3, 5-4, 9-1, 10-22
8859-1212	5-4
8859-1506	5-3
8859-1508	9-5
8859-1509	9-4
8863-1301	7-1, 7-2, 7-3
8863-1302	13-7, 13-39
8863-1310	7-3
8863-1337	13-33
8863-1338	7-1
8863-1343	13-6
8863-1449	13-13, 13-15
8863-1509	3-5
8863-3001	7-3, 13-7, 13-39
8866-1009	9-5
8866-1010	4-4, 9-3, 9-4, 10-22, 13-9
8866-1011	13-25, 13-40
8866-1013	13-12, 13-13, 13-15, 13-25, 13-40
8866-1016	13-12
8866-1064	13-25, 13-40
8866-1065	13-7, 13-39
8866-1109	8-3, 8-4, 8-5, 9-2, 9-5
8866-1110	13-6
8866-1180	13-12
8866-1204	13-24
8866-1305	8-1, 8-3, 8-4, 8-5
8866-1341	9-9
8866-1345	5-6, 9-2, 9-3, 9-4
8866-1348	13-7, 13-39
8866-1362	9-2, 9-3
8866-1364	8-3, 8-5, 9-3
8866-1384	9-4
8866-1406	9-9
8866-1407	13-7, 13-39
8866-1408	5-6, 9-2, 9-3, 9-4
8866-2003	8-3, 8-4, 8-5, 9-4, 9-5, 9-10
8866-2005	5-4, 6-1, 8-1, 8-4, 8-5, 9-2, 9-5, 9-11, 13-21, 13-24
8866-2006	6-1, 9-10
8866-2007	9-6, 9-7
8866-2008	5-4, 9-1, 9-2, 9-3, 9-4, 9-5
8866-2010	5-1, 5-3, 9-1
8866-2011	5-1, 5-3, 5-4, 9-1
8866-2017	8-3, 8-4, 8-5, 9-4, 9-5
8866-2018	5-3, 5-4, 8-4, 8-5, 9-4, 9-5, 9-10, 13-13, 13-15
8866-2019	9-8, 9-10, 13-19, 13-32
8866-2025	13-28
8866-2026	9-10
8866-2027	9-2
8866-2059	9-9
8866-2061	9-1, 13-28
8866-2062	9-4, 9-5, 9-10
8866-2064	5-2, 5-4, 8-3, 8-4, 8-5, 9-2, 9-4, 9-5, 9-10, 13-24
8866-2065	9-8, 9-10, 13-19, 13-32
8866-2067	9-1
8866-2069	10-26
8866-2082	9-9
8866-2084	13-13, 13-15, 13-24
8866-2085	13-19, 13-32
8866-2087	9-5, 13-29, 13-30
8866-2090	5-3, 9-1
8866-2103	8-5, 9-5
8866-2105	4-4, 5-4, 8-1, 8-3, 8-4, 8-5, 9-4, 9-5, 9-8, 13-9, 13-13, 13-15, 13-25, 13-33, 13-40
8866-2106	6-1, 9-1, 13-13, 13-15, 13-25, 13-40
8866-2108	9-2, 9-3, 9-4, 13-28, 13-29, 13-30
8866-2110	13-29, 13-30
8866-2119	5-4, 9-4, 9-5
8866-2120	13-25, 13-40
8866-2122	13-28
8866-2139	8-3, 8-4, 8-5
8866-2142	9-5
8866-2152	13-13, 13-15
8866-2174	13-24
8866-2175	10-21
8866-2193	10-2
8866-2194	6-1
8866-2195	10-18
8866-2224	5-4, 6-1, 9-5, 13-25, 13-40
8866-2227	5-6, 9-2, 9-3, 9-4
8866-2237	9-5
8866-2239	5-3, 5-4, 8-3, 8-4, 8-5, 9-1, 9-2, 9-3, 9-4, 9-5, 13-21, 13-24
8866-2240	9-2, 9-3, 9-5, 9-10
8866-2242	5-4, 9-2, 9-4, 9-5, 13-28, 13-29, 13-30
8866-2244	9-2, 13-19, 13-29, 13-30, 13-32
8866-2306	9-5
8866-2330	5-3
8866-2421	5-4, 9-5
8866-2425	9-5
8866-2440	5-3
8867-1001	2-2, 13-6, 13-33, 13-43
8867-1002	3-4, 13-33
8867-1008	3-5, 13-13, 13-15, 13-19
8867-1022	2-2, 4-4, 13-9, 13-13, 13-15, 13-43
8867-1033	2-2, 10-1, 10-3, 10-4, 10-5, 10-6, 10-7, 10-8, 13-10, 13-14
8869-1387	13-8
8870-1002	13-3
8870-1004	13-25
8870-1023	5-7
8870-1070	13-8

* *Complete revision of index.*

INDEX

PART NUMBER	PAGE
8871-1210	5-7
8871-1213	13-8
8871-1281	6-2
8871-1283	5-5
8871-1284	5-2, 5-4
8871-1380	13-5, 13-16
8871-1383	13-8
8871-1384	5-2, 5-4
8871-1385	5-4, 5-5
8871-2011	3-4, 5-5, 13-33
8871-2013	5-5
8871-2014	5-5
8871-2034	13-8
8871-2232	13-5, 13-16
8871-2305	13-7, 13-39
8874-1805	5-5
8882-1002	13-7, 13-39
8882-1004	7-1, 7-7
8903-1196	7-4
9002-0247	2-2
9002-1552	5-1, 5-3, 7-1, 7-2, 7-3
9002-1705	13-19, 13-32, 13-38
9002-3155	9-5
9002-6491	12-3
9002-6803	11-1, 11-2
9002-7179	9-8, 13-7, 13-33, 13-39
9002-7180	13-25, 13-40
9002-7187	5-1, 5-2, 5-3, 5-4, 9-5, 9-11, 13-1, 13-7, 13-19, 13-21, 13-25, 13-32, 13-38, 13-39, 13-40
9002-7214	13-5, 13-8, 13-16, 13-17
9002-7239	11-5
9002-7319	13-5, 13-8, 13-17
9002-7331	5-5
9002-7470	9-5
9002-7471	3-1, 3-2, 3-3, 3-4, 5-1, 5-3, 9-5, 9-8, 13-7, 13-25, 13-33, 13-39, 13-40
9002-7473	3-1, 3-4, 5-4, 6-1, 9-7, 13-33
9002-7475	13-25, 13-40
9002-7906	5-4, 9-4, 9-5
9002-7908	5-1, 5-3
9002-7987	7-1, 7-7
9002-8482	9-1
9002-8660	5-2, 5-4, 9-4
9002-8662	7-1, 7-2, 13-7, 13-39
9002-8695	5-1, 5-3, 5-4, 9-1
9002-8935	9-9
9002-8946	7-3
9002-8955	13-7
9002-8956	13-7
9002-8958	13-7
9002-8968	13-7
9002-8977	5-1, 5-3, 7-3
9002-8978	13-7
9002-8990	13-25, 13-40
9002-9955	13-5, 13-8, 13-16
9002-9999	13-6
9003-0271	5-1, 5-3, 5-4, 5-6
9015-3001	4-1, 4-2, 4-4, 13-6, 13-9, 13-12, 13-13, 13-15, 13-18
9020-0003	4-1, 4-2, 4-4, 13-9, 13-13, 13-15, 13-18
9020-0170	13-17
9020-0266	7-5
9020-0284	7-7
9020-0299	13-7, 13-39
9020-0381	13-8
9020-0382	11-5
9020-0406	7-2
9020-0434	11-3, 11-4
9020-0440	6-3
9020-0445	12-3
9020-0506	13-17
9020-0602	13-23
9020-0638	7-1, 7-2
9020-0680	13-8
9020-0685	13-17
9020-0688	12-3
9020-0755	2-1, 5-6, 13-8
9020-0807	5-8
9020-0999	13-16
9020-1348	7-5
9020-1414	5-8
9020-1443	13-6, 13-25, 13-40
9020-1918	2-2, 13-43
9020-2230	7-4, 7-5
9020-2500	6-7
9020-2501	6-7
9020-2926	9-10
9020-3040	9-8, 13-7, 13-33, 13-39
9020-3376	13-5, 13-16
9020-3502	7-2
9020-3543	6-5
9020-3680	13-8
9020-3840	13-8
9020-4007	4-4, 13-9
9020-4096	8-4, 8-5, 9-11, 13-21
9020-4097	13-13, 13-15
9020-4244	4-4, 13-6, 13-7, 13-9, 13-12, 13-13, 13-15, 13-25, 13-39, 13-40
9020-4245	4-4, 13-6, 13-7, 13-9, 13-13, 13-15, 13-25, 13-39, 13-40
9020-5205	5-2, 5-4, 11-1, 11-2
9020-5663	5-8
9020-5686	11-3, 11-4, 11-6, 11-7
9020-5687	11-3, 11-4, 11-6, 11-7
9020-5688	11-3, 11-4
9020-5792	5-1, 5-2, 5-3, 5-4, 9-4, 9-5
9020-5870	3-1, 3-2, 3-3, 4-4, 13-9, 13-33
9020-5891	2-3
9020-5918	5-6
9020-6023	13-8
9020-6089	13-25, 13-40
9020-6124	5-2, 5-4, 11-1, 11-2
9020-6134	13-8
9020-6169	13-8
9020-6170	13-8
9020-6194	2-1, 9-11, 13-4, 13-7, 13-21, 13-33, 13-39
9020-6198	7-6
9020-6199	13-7, 13-33, 13-39
9020-6262	5-2, 5-3, 5-4, 5-8
9020-6548	10-11
9020-6549	10-11
9020-6550	10-11
9020-6552	10-11
9020-6553	10-11
9020-6554	10-11
9020-6555	10-11
9020-6556	10-11
9020-6557	10-11
9020-6558	10-11
9020-6559	10-11
9020-6560	10-11
9020-6561	10-11
9020-6564	10-11
9020-6567	10-23
9020-6606	5-8
9020-6739	10-14, 11-1, 11-2
9020-6846	2-2
9020-7046	3-5, 4-1
9020-7204	6-3
9020-7220	13-5

** Complete revision of index.*

INDEX

PART NUMBER	PAGE
9020-7352	9-9
9020-7458	2-1
9020-7463	9-8, 13-7, 13-25, 13-33, 13-39, 13-40
9020-7464	13-7, 13-39
9020-7661	13-7
9020-7719	11-1, 11-2, 13-24
9020-7801	7-3
9020-7856	8-1, 8-5
9020-7882	13-25, 13-40
9020-7902	3-5
9020-8066	10-14
9020-8067	10-14
9020-8071	10-14
9020-8072	10-14
9021-6562	10-11
9040-0543	7-2
9040-0654	5-5, 11-1, 11-2
9040-2427	5-2, 5-4, 11-1, 11-2
9040-2477	4-1, 4-2, 13-9
9040-2478	4-2
9040-3396	13-7
9045-1020	13-13, 13-18
9045-1039	13-12
9045-3002	4-1
9045-3006	13-12
9045-3007	13-12
9045-3013	13-13, 13-18
9045-5007	4-2
9045-5008	4-2
9045-5035	13-12
9045-5037	13-12
9045-5043	13-18
9045-5044	13-15
9045-5049	4-3
9045-5051	4-2
9045-5052	4-2
9045-6002	13-12
9045-6004	13-18
9045-6009	4-2
9045-6010	4-2
9055-1013	13-15
9055-3012	13-13, 13-18
9055-3013	13-13, 13-18
9055-5013	13-13
9055-5020	4-3
9055-6004	13-13
9060-0267	7-5
9060-0273	7-4, 7-5
9060-0274	7-4, 7-5
9060-0390	4-1
9080-1314	4-2
9080-1315	4-2
9100-3016	12-3, 13-32
9100-3018	12-3, 13-32
9100-3020	12-3, 13-32
9100-3030	12-2
9100-3031	12-3
9100-3044	12-2
9100-3052	12-2
9100-3053	13-8
9100-3055	13-5, 13-16
9100-3056	13-17
9100-3065	11-4
9101-1009	13-5, 13-16
9101-3026	13-16
9102-1094	13-25, 13-40
9102-4051	8-2
9102-4052	8-2
9102-4053	8-2
9102-4054	8-2
9102-4055	8-2
9102-4056	8-2
9102-4057	8-2
9102-4058	8-2
9102-4059	8-2
9102-4060	8-2
9102-4061	8-2
9102-4062	8-2
9103-1009	2-2
9103-1014	2-3
9103-1087	7-3
9103-1088	7-3
9103-1136	3-5
9103-1236	3-1, 3-2, 3-3, 4-4, 13-9, 13-33
9103-1268	12-2
9103-1278	13-3
9103-1490	13-8
9103-1494	13-8
9103-1495	13-3
9103-1521	13-8
9103-3011	12-2
9103-3018	12-1, 12-3
9103-3023	12-3
9103-3028	5-7
9103-3029	2-1
9103-3032	13-5, 13-16
9103-3038	3-5, 13-13, 13-15
9103-3039	13-13, 13-15
9103-3084	11-3, 11-4
9103-3089	12-2
9103-3096	10-16
9103-3102	2-1, 12-2
9103-3104	6-8
9103-3111	11-3, 11-4
9103-3137	5-6
9103-3161	13-25, 13-40
9103-3185	3-1, 13-33
9103-3186	3-1, 3-2, 3-3, 4-4, 13-9, 13-33
9103-3187	3-4
9103-3196	13-25, 13-40
9103-3218	12-3
9103-3230	13-19, 13-25, 13-32, 13-40
9103-3240	10-11
9103-3246	5-1, 5-3, 11-1, 11-2
9103-3247	11-3, 11-4, 11-6, 11-7
9103-3251	13-3
9103-3252	13-3
9103-3277	11-6, 11-7
9103-3281	7-3
9103-3317	11-3, 11-4
9103-3320	2-1, 12-2
9103-3360	13-5, 13-16
9103-3366	13-14
9103-3387	13-7
9103-3391	13-7
9103-3394	13-7
9103-3400	13-12
9103-3417	13-7, 13-39
9103-3430	10-1, 10-3, 10-4
9103-3438	13-13
9103-3445	3-4, 13-33
9103-3462	13-16
9103-3464	13-8
9103-3465	13-8
9103-3485	2-1
9103-4001	12-2
9103-4018	10-16
9103-4139	10-5, 13-36
9103-4153	10-1, 10-5, 13-36
9103-4156	10-7, 13-10
9103-4276	10-1, 10-2, 13-34
9103-4278	10-4
9103-4280	10-1, 10-4, 10-5, 10-6
9103-4281	10-4
9103-4282	10-4, 10-5
9103-4286	10-3
9103-4291	10-3
9103-4297	10-3
9103-4299	10-3

* *Complete revision of index.*

INDEX

PART NUMBER	PAGE
9103-4301	13-14
9103-4302	13-14
9103-4303	13-14
9103-4304	13-14
9103-4305	13-14
9103-4306	13-14
9103-4308	10-2
9103-4337	10-3
9103-4339	10-5, 13-36
9103-4372	13-12
9103-4373	13-12
9103-4374	13-12
9103-4375	13-12
9103-4376	13-12
9103-4377	13-12
9103-4390	6-7
9103-5101	13-23
9103-5240	2-2
9103-5247	13-41
9103-5248	13-41
9104-1016	5-9
9104-1227	13-19
9104-1243	13-25, 13-40
9104-1261	13-25, 13-40
9104-1322	13-13, 13-15
9104-1323	13-13, 13-15
9104-1324	13-13, 13-15
9104-1325	13-13, 13-15
9104-1326	13-13, 13-15
9104-1327	13-13, 13-15
9104-1356	13-13, 13-15
9104-1361	13-13, 13-15
9104-1362	13-13, 13-15
9104-1365	3-5
9104-1438	2-2
9104-1439	2-2, 13-43
9104-1449	2-2, 13-43
9104-1450	2-2, 13-43
9104-1451	2-2, 3-4, 13-33, 13-43
9104-1459	2-2, 13-43
9104-1481	2-2, 13-43
9104-1596	2-2, 13-43
9104-1598	2-2, 13-43
9104-1732	2-2, 13-43
9104-1733	2-2
9104-3063	13-21
9104-3121	13-25, 13-40
9104-3123	13-19
9104-3125	4-4, 13-6, 13-7, 13-9, 13-13, 13-15, 13-25, 13-39, 13-40
9104-3126	4-4, 13-6, 13-7, 13-9, 13-12, 13-13, 13-15, 13-25, 13-39, 13-40
9104-3134	12-3, 13-32
9104-3135	12-3, 13-32
9104-3136	12-3, 13-32
9104-3146	6-8
9104-3163	8-1, 8-5, 9-4, 9-5
9104-3165	13-25, 13-40
9104-3168	13-13
9104-3186	13-15
9104-3199	13-19, 13-32, 13-38
9104-3209	12-2, 13-13, 13-15
9104-3210	12-2
9104-3211	12-2
9104-3214	7-7
9104-3215	12-2
9104-3221	13-13, 13-15
9104-3222	2-2
9104-3237	2-1
9104-3246	10-8
9104-3247	2-2, 13-43
9104-3286	7-7
9104-3298	6-8
9104-3353	13-26
9104-3429	13-8
9104-3446	10-14
9104-4002	10-15, 13-11
9104-4033	13-35
9104-4044	6-2
9104-4099	6-7
9104-4100	6-7
9104-4101	6-7
9104-4103	6-7
9104-4104	6-7
9104-4105	6-6, 6-7
9104-4106	6-7
9104-4107	6-7
9104-4109	6-7
9104-4111	6-7
9104-4112	6-7
9104-4113	6-7
9104-4274	10-3
9104-4278	6-7
9104-4282	6-7
9104-4311	6-6, 6-7
9104-4360	6-7
9104-4361	6-7
9104-4462	6-6, 6-7
9104-4463	13-14
9104-4464	13-14
9104-4465	13-14
9104-4466	13-14
9104-4467	13-14
9104-4468	13-14
9104-4469	13-14
9104-4470	13-14
9104-4475	13-19
9104-4524	10-2
9104-5034	13-19
9104-5095	3-5
9104-5152	2-2
9104-6056	9-11, 13-21
9104-6061	13-15
9104-6062	13-13, 13-15
9104-6074	3-5
9104-6114	13-19
9105-3020	5-1, 5-3, 5-4, 9-4, 9-5
9105-3419	11-6, 11-7, 13-5, 13-8, 13-16, 13-17, 13-19, 13-38
9105-3426	8-3, 8-4, 8-5, 9-1, 9-2, 9-3, 9-4, 9-5, 9-8, 13-33
9105-3450	9-8, 13-33
9105-3559	13-8
9106-3047	12-2
9106-4005	6-7
9106-4006	6-7
9106-4007	6-7
9106-4016	10-3, 10-7, 13-10
9106-4017	10-3, 13-35
9106-6020	7-2
9106-6021	7-2
9108-1087	3-4, 13-33
9108-1148	3-1
9108-1158	5-1, 5-3
9108-1171	3-1, 13-33
9108-1172	3-1, 3-2, 13-33
9108-1176	2-3
9108-1177	2-2
9108-1181	5-6
9108-1201	9-5
9108-1202	2-1
9108-1210	2-1
9108-1243	5-1, 5-3
9108-1258	2-1
9108-1259	2-1
9108-1264	7-4
9108-1285	5-4
9108-1313	4-4, 9-6, 9-8, 13-9
9108-1324	3-5

* *Complete revision of index.*

INDEX

PART NUMBER	PAGE
9108-1326	9-8, 13-7, 13-33, 13-39
9108-1327	5-7
9108-1330	11-5
9108-1332	7-7
9108-1354	7-1
9108-1368	4-1
9108-1369	4-1
9108-1371	11-3, 11-4
9108-1384	2-2
9108-1388	5-1, 5-3
9108-1396	9-9
9108-1415	2-2, 13-43
9108-1432	9-6, 9-8
9108-1433	9-6, 9-8
9108-1445	10-13
9108-1447	3-2, 3-3, 13-33
9108-1461	2-2
9108-1462	11-1, 11-2
9108-1475	2-1
9108-1480	11-3, 11-4
9108-1491	10-21
9108-1499	13-8
9108-1517	13-1
9108-1522	2-2, 9-5, 13-43
9108-1523	2-2, 9-5, 13-43
9108-1541	5-6
9108-1545	13-8
9108-1554	4-4, 13-9
9108-1564	5-6
9108-1573	13-6
9108-1574	13-6
9108-1577	4-4, 13-9
9108-1582	13-3
9108-1594	4-4, 13-9
9108-1601	13-1
9108-1602	13-4
9108-1603	13-4
9108-1606	13-16
9108-1607	13-16
9108-1608	13-16
9108-1609	13-16
9108-1612	13-16
9108-1613	13-16
9108-1614	13-16
9108-1622	4-4, 13-9
9108-1640	11-5, 13-1
9108-1654	5-6
9108-1660	13-16
9108-1661	13-16
9108-1664	7-3
9108-1665	13-16
9108-1671	13-8
9108-1675	13-8
9108-1676	13-3
9108-1679	10-22
9108-1680	13-8
9108-1681	2-1
9108-1686	13-16
9108-1687	13-16
9108-1688	13-16
9108-1689	13-16
9108-1691	2-2
9108-1693	2-2, 13-42, 13-43
9108-1695	2-2, 13-43
9108-1709	2-1
9108-3012	5-1, 5-3
9108-3013	10-18
9108-3019	5-4
9108-3040	9-5
9108-3044	10-20
9108-3048	11-1, 11-2
9108-3050	9-6
9108-3053	10-23
9108-3056	10-9
9108-3059	9-2
9108-3063	3-1, 3-2, 13-33
9108-3065	5-6
9108-3066	5-6
9108-3069	10-22
9108-3070	10-22
9108-3072	5-3
9108-3077	10-22
9108-3081	7-4
9108-3084	11-4
9108-3085	5-6
9108-3094	5-6
9108-3095	5-4, 9-4, 9-5
9108-3104	5-3, 9-4
9108-3106	5-1, 5-2, 5-3, 5-4, 9-4, 9-5
9108-3107	13-2
9108-3110	11-1, 11-2, 11-3, 11-4
9108-3113	5-4
9108-3114	5-4
9108-3115	5-4
9108-3118	9-1
9108-3122	5-2
9108-3126	5-7
9108-3127	5-7
9108-3128	5-7
9108-3129	5-7
9108-3136	7-1, 7-2, 7-7, 13-7, 13-39
9108-3143	5-1, 5-3
9108-3144	5-1, 5-3, 9-1
9108-3145	9-1
9108-3155	13-8
9108-3159	2-1
9108-3161	2-1
9108-3173	2-1
9108-3200	10-22
9108-3212	8-5, 13-24
9108-3213	8-3, 8-4, 8-5, 9-5
9108-3216	13-7, 13-25, 13-40
9108-3217	13-25, 13-40
9108-3218	5-2, 5-3, 5-4, 5-5
9108-3221	11-3
9108-3222	5-4, 8-4, 8-5, 9-4, 9-5
9108-3232	9-1
9108-3233	5-1, 5-3, 9-1
9108-3235	7-4
9108-3240	9-2
9108-3241	9-2, 10-22
9108-3242	9-2, 10-22
9108-3245	9-1
9108-3246	5-1, 5-3, 5-4, 9-1
9108-3248	4-4, 13-9
9108-3249	13-13, 13-15
9108-3250	5-9
9108-3253	5-9
9108-3259	11-3, 11-4
9108-3260	11-3, 11-4, 13-8
9108-3262	10-15, 13-11
9108-3263	13-8
9108-3266	5-4, 9-5
9108-3267	6-1
9108-3268	12-2
9108-3269	5-6, 12-2
9108-3270	12-2
9108-3281	10-8
9108-3285	10-5
9108-3286	10-7, 13-10
9108-3292	10-12
9108-3293	9-1
9108-3294	10-13
9108-3296	10-17
9108-3297	3-2, 3-3, 13-33
9108-3298	3-1, 13-33
9108-3301	10-22
9108-3302	8-1
9108-3303	8-1
9108-3304	10-1

** Complete revision of index.*

INDEX

PART NUMBER	PAGE
9108-3306	5-3, 8-3, 8-4, 8-5, 9-1, 9-2, 9-3, 9-5
9108-3310	8-3, 8-4, 8-5, 13-7, 13-39
9108-3311	7-7, 11-2
9108-3312	7-7
9108-3314	12-2, 13-4
9108-3317	12-2
9108-3318	12-2
9108-3320	12-1
9108-3321	12-1
9108-3323	5-5
9108-3324	12-2
9108-3335	9-10
9108-3336	7-7
9108-3338	5-1, 5-3
9108-3339	9-4, 9-5
9108-3341	13-2
9108-3342	9-4, 9-5
9108-3343	13-7, 13-39
9108-3345	10-21
9108-3348	13-8
9108-3361	13-1
9108-3363	13-1
9108-3364	5-6
9108-3365	13-4
9108-3366	13-4
9108-3367	13-6
9108-3368	13-6
9108-3371	13-3
9108-3372	13-3
9108-3374	13-3
9108-3375	13-3
9108-3376	13-8
9108-3378	13-8
9108-3379	10-3
9108-3380	13-3
9108-3381	13-6
9108-3382	13-6
9108-3385	6-8
9108-3392	13-8
9108-3393	13-2, 13-27
9108-3397	13-16
9108-3398	13-16
9108-3399	13-16
9108-3400	13-16
9108-3401	10-10
9108-3404	5-1, 5-3, 7-3
9108-3406	11-1, 11-2
9108-3418	5-4, 9-5
9108-3419	5-1, 5-3, 9-4, 9-5
9108-3420	10-9
9108-3424	10-25
9108-3425	13-24
9108-3426	9-2, 9-4, 13-24
9108-3428	7-4, 12-2
9108-3429	13-31
9108-3430	13-31
9108-3434	13-8
9108-3440	11-1, 11-2
9108-3441	10-25
9108-3442	10-25
9108-3449	9-5
9108-3450	13-8
9108-3456	5-2, 5-4
9108-3459	10-25
9108-3461	10-18
9108-3462	6-7
9108-3463	9-5
9108-3464	9-5
9108-3465	9-5
9108-3466	9-5
9108-3467	10-8
9108-3470	10-5
9108-3471	10-7, 13-10
9108-3472	10-3
9108-3473	10-3
9108-3475	5-1, 5-3, 9-4, 9-5
9108-3480	2-3
9108-3489	13-1
9108-3491	5-5, 7-4
9108-3492	12-2
9108-3493	5-1, 5-3
9108-3494	12-2
9108-3497	12-2
9108-3499	10-18
9108-3501	5-5
9108-3503	5-2, 5-4
9108-3504	5-2, 5-4
9108-3509	12-2
9108-3510	12-2
9108-3513	10-3, 13-33
9108-3516	9-2, 10-22
9108-3517	10-22
9108-3518	10-22
9108-3519	9-2, 10-22
9108-3521	10-12
9108-3532	10-8
9108-3533	2-1
9108-3535	13-25, 13-40
9108-3539	12-2
9108-3573	5-6
9108-4001	5-2, 5-3, 5-4
9108-4002	5-4, 11-1, 11-2
9108-4003	5-4, 11-1, 11-2
9108-4004	10-9
9108-4005	10-9
9108-4006	10-9
9108-4007	10-9
9108-4008	10-9
9108-4009	10-9
9108-4010	10-9
9108-4011	10-9
9108-4012	10-9
9108-4013	10-9
9108-4014	10-9
9108-4015	10-9
9108-4016	10-9
9108-4017	10-9
9108-4018	10-9
9108-4021	10-22
9108-4022	10-22
9108-4023	10-18
9108-4024	10-18
9108-4029	10-18
9108-4031	10-18
9108-4032	10-18
9108-4033	10-18
9108-4034	10-18
9108-4035	10-18
9108-4036	10-18
9108-4038	10-18, 11-1, 11-2
9108-4039	10-18
9108-4042	10-13
9108-4043	10-13
9108-4045	6-2
9108-4046	6-2
9108-4047	6-2
9108-4048	6-2
9108-4049	6-2
9108-4050	6-2
9108-4051	6-2
9108-4052	6-2
9108-4053	6-3
9108-4054	6-3
9108-4055	6-4
9108-4056	6-3
9108-4057	6-3
9108-4058	6-3
9108-4059	6-3
9108-4060	6-3
9108-4061	6-3
9108-4062	6-3

* *Complete revision of index.*

INDEX

PART NUMBER	PAGE
9108-4063	6-3
9108-4064	6-3
9108-4065	6-3
9108-4066	6-3
9108-4067	6-3
9108-4068	6-3
9108-4069	6-3
9108-4070	6-3
9108-4071	6-3
9108-4072	6-3
9108-4073	6-3
9108-4074	6-3
9108-4075	6-3
9108-4076	6-3
9108-4077	6-3
9108-4078	6-3
9108-4079	6-3
9108-4080	6-3
9108-4081	6-3
9108-4082	6-3
9108-4083	6-3
9108-4084	6-3
9108-4085	6-3
9108-4086	6-3
9108-4087	6-3
9108-4088	6-3
9108-4089	6-3
9108-4090	6-3
9108-4091	6-3
9108-4092	6-3
9108-4093	6-3
9108-4094	6-3
9108-4095	6-3
9108-4097	6-3
9108-4098	6-3
9108-4099	6-3
9108-4100	6-3
9108-4101	6-3
9108-4102	6-3
9108-4103	6-3
9108-4104	6-3
9108-4105	6-5
9108-4106	6-5
9108-4107	6-5
9108-4108	6-5
9108-4109	6-5
9108-4110	6-5
9108-4111	6-5
9108-4112	6-5
9108-4113	6-5
9108-4114	6-5

PART NUMBER	PAGE
9108-4115	6-5
9108-4116	6-5
9108-4117	6-5
9108-4118	6-5
9108-4119	6-5
9108-4120	6-5
9108-4121	6-5
9108-4122	6-5
9108-4123	6-5
9108-4124	6-5
9108-4125	6-5
9108-4126	6-5
9108-4127	6-5
9108-4128	6-5
9108-4129	6-5
9108-4130	6-5
9108-4131	6-5
9108-4132	10-18
9108-4134	10-18
9108-4135	10-17
9108-4136	10-17
9108-4137	10-17
9108-4138	10-17
9108-4139	10-17
9108-4140	10-17
9108-4141	10-17
9108-4142	10-17
9108-4143	10-17
9108-4144	10-17
9108-4145	10-17
9108-4146	10-17
9108-4147	10-17
9108-4151	8-2
9108-4152	8-2
9108-4153	8-2
9108-4154	8-2
9108-4155	10-12
9108-4156	10-12
9108-4157	10-12
9108-4158	10-12
9108-4159	10-12
9108-4160	10-12
9108-4161	10-12
9108-4162	5-2, 5-4
9108-4163	6-3
9108-4164	6-5
9108-4165	10-5
9108-4166	10-5
9108-4167	10-1, 10-5, 10-6
9108-4168	10-5
9108-4169	10-5

PART NUMBER	PAGE
9108-4176	10-3, 10-4, 10-7
9108-4177	10-8
9108-4178	10-8
9108-4179	10-8
9108-4180	10-8
9108-4181	10-8
9108-4182	10-8
9108-4183	10-8
9108-4184	10-7, 13-10
9108-4185	10-7, 13-10
9108-4186	10-7, 13-10
9108-4187	10-7, 13-10
9108-4188	10-7, 13-10
9108-4189	10-7, 13-10
9108-4194	10-8, 13-14
9108-4198	5-6
9108-4199	10-9
9108-4200	10-9
9108-4201	10-9
9108-4202	10-9
9108-4203	10-9
9108-4204	10-9
9108-4205	10-9
9108-4206	10-9
9108-4207	10-9
9108-4210	12-2
9108-4211	6-4
9108-4212	6-4
9108-4213	6-4
9108-4214	10-10
9108-4215	10-10
9108-4216	10-3
9108-4217	10-3
9108-4218	10-17
9108-4219	10-7, 13-10
9108-4220	10-7, 13-10
9108-4221	10-7, 13-10
9108-4222	10-7, 13-10
9108-4223	10-7, 13-10
9108-4224	10-7, 13-10
9108-4225	10-7, 13-10
9108-4226	10-7, 13-10
9108-4227	10-15, 13-11
9108-4228	10-15, 13-11
9108-4229	10-9
9108-4230	10-9
9108-4231	10-9
9108-4232	10-9
9108-4233	10-9
9108-4234	10-9
9108-4235	10-9

* *Complete revision of index.*

INDEX

PART NUMBER	PAGE
9108-4236	10-9
9108-4237	10-9
9108-4238	10-9
9108-4239	10-9
9108-4240	7-4
9108-4268	7-4
9108-4269	10-18
9108-4270	10-18
9108-4271	10-18
9108-4272	10-18
9108-4274	10-18
9108-4276	10-18
9108-4277	10-9
9108-4278	10-9
9108-4279	10-9
9108-4280	10-9
9108-4281	10-9
9108-4282	13-2
9108-4283	12-1, 12-2, 12-3
9108-4284	10-25
9108-4285	10-25
9108-4286	10-25
9108-4287	10-25
9108-4288	10-25
9108-4289	10-25
9108-4290	S10-25
9108-4291	10-25
9108-4292	10-25
9108-4293	10-25
9108-4294	10-25
9108-4295	10-25
9108-4296	10-25
9108-4297	10-25
9108-4298	10-25
9108-4299	10-25
9108-4300	10-25
9108-4301	10-25
9108-4302	10-7, 10-25
9108-4303	10-25
9108-4305	10-8
9108-4308	10-7, 13-10
9108-4311	5-1, 5-3, 5-4
9108-4312	5-1, 5-3, 5-4
9108-4314	10-19, 10-20
9108-4315	10-19, 10-20
9108-4316	10-18
9108-4317	10-18
9108-4318	10-18
9108-4319	10-18
9108-4320	10-18
9108-4321	10-18
9108-4322	10-18
9108-4323	10-18
9108-4324	10-18
9108-4325	10-18
9108-4326	10-18
9108-4327	10-18
9108-4328	10-18
9108-4329	10-18
9108-4330	10-18
9108-4331	10-18
9108-4332	10-18
9108-4345	7-4
9108-4353	6-3
9108-4354	6-3
9108-4355	6-3
9108-4356	6-3
9108-4357	6-3
9108-5013	5-6
9108-5015	10-22
9108-5016	5-5
9108-5025	7-4, 11-1, 11-2
9108-5033	4-1
9108-5034	11-4
9108-5035	11-3
9108-5045	7-7, 11-2
9108-5046	13-2
9108-5049	3-5
9108-5050	13-8
9108-5051	10-21
9108-5053	5-2, 5-3, 5-4
9108-5054	13-1
9108-5056	13-6
9108-5057	13-8
9108-5058	13-9
9108-5059	13-3
9108-5062	13-16
9108-5064	9-5
9108-5071	13-24
9108-5072	13-24
9108-5073	13-31
9108-5084	7-3
9108-5091	3-5
9108-5102	13-4
9108-5104	13-16
9108-5105	13-1
9108-5107	13-24
9108-5110	6-1
9108-5111	7-6
9108-5139	5-6
9108-6031	7-2
9108-6034	5-1, 5-3
9108-6040	2-1
9108-6041	5-6
9108-6055	5-2, 5-4, 5-9
9108-6060	2-1
9108-6063	7-2
9108-6064	7-2
9108-6073	3-5
9108-6081	7-1
9108-6088	2-1
9108-6089	13-2
9108-6090	7-7
9108-6111	7-1
9108-6112	7-1
9108-6113	7-2
9108-6115	13-8
9108-6116	4-1
9108-6119	13-6
9108-6121	13-9
9108-6122	4-4, 13-9
9108-6130	5-2, 5-4
9108-6131	5-2, 5-4
9108-6143	13-25, 13-40
9108-6144	13-25, 13-40
9108-6146	7-3
9108-6151	3-5
9108-6152	3-5
9108-6162	2-1
9108-6174	5-6
9108-6175	2-1
9109-1001	5-2
9109-3001	5-4, 9-4
9109-3002	10-19
9109-3004	12-1
9109-3006	6-7
9109-3016	10-19
9109-3017	5-2, 9-4
9109-4001	6-7
9109-4003	6-7
9109-4004	6-7
9109-4008	6-7
9109-4013	6-7
9109-4015	6-7
9109-4020	10-20
9109-4021	10-19
9109-4025	10-19, 10-21
9109-4026	10-19, 10-21
9109-4027	10-19, 10-21
9109-4028	10-19, 10-21
9109-4029	10-19, 10-21
9109-4030	10-19, 10-21
9109-4031	10-19, 10-21

** Complete revision of index.*

INDEX

PART NUMBER	PAGE
9109-4032	10-19, 10-21
9109-4033	10-19, 10-21
9109-4034	10-19, 10-21
9109-4035	10-19, 10-21
9109-4036	10-19
9109-4037	10-19, 10-21
9109-4038	10-19, 10-21
9109-4039	10-19, 10-21
9109-4040	10-19, 10-21
9109-5020	6-1
9109-5022	7-6
9109-5023	6-1
9109-5024	7-6
9111-1001	13-19
9111-1002	13-19
9111-3003	13-19
9112-0003	2-2, 13-43
9112-0004	2-2, 13-43
9112-1013	13-19
9112-1017	13-19
9112-1018	13-19
9112-1022	3-1, 13-33
9112-1023	9-7, 13-33
9112-1024	9-7, 13-33
9112-1041	9-7, 13-33
9112-1045	3-4
9112-1056	3-4, 13-33
9112-1066	9-7, 13-33
9112-1079	3-4, 13-33
9112-1080	3-4, 13-33
9112-1081	3-2, 3-3, 13-33
9112-1082	3-2, 13-33
9112-1083	3-2, 13-33
9112-1089	2-1
9112-1091	2-2, 13-43
9112-1098	13-19
9112-1102	2-1
9112-1122	3-4
9112-1124	4-1
9112-1125	9-8, 13-7, 13-33, 13-39
9112-1134	9-8, 13-7, 13-33, 13-39
9112-1139	13-7
9112-1145	13-5
9112-1146	13-5, 13-16
9112-1148	13-5
9112-1149	13-5
9112-1150	13-5, 13-16
9112-1151	13-5, 13-16, 13-17
9112-1152	13-5, 13-16
9112-1153	13-17
9112-1154	13-5, 13-16
9112-1157	9-7, 13-33
9112-1158	13-25, 13-40
9112-1159	13-25, 13-40
9112-1160	13-25, 13-40
9112-1161	13-25, 13-40
9112-1162	13-25, 13-40
9112-1163	13-25, 13-40
9112-1171	10-2
9112-1176	10-2
9112-1178	10-2
9112-1179	10-2
9112-1180	10-2
9112-1181	13-5
9112-1186	13-5, 13-16
9112-1187	13-5, 13-16
9112-1188	13-5, 13-16
9112-1189	13-5, 13-16
9112-1190	13-5, 13-16
9112-1191	13-5, 13-16
9112-1192	13-5
9112-1193	13-5, 13-16
9112-1194	13-25, 13-40
9112-1196	3-4
9112-1197	3-4, 13-33
9112-1209	2-1
9112-1210	7-3
9112-1215	13-17
9112-1216	13-16, 13-17
9112-1219	2-1
9112-1221	13-28
9112-1236	10-2
9112-1239	2-2, 13-43
9112-1240	2-2, 13-43
9112-1273	13-32
9112-1274	13-32
9112-1290	13-32
9112-1308	3-5
9112-1309	3-5
9112-1310	3-5
9112-3003	9-6
9112-3004	9-6
9112-3005	9-7
9112-3006	9-8
9112-3008	9-7
9112-3009	10-2
9112-3010	10-1
9112-3012	3-4
9112-3013	3-4
9112-3016	9-8, 13-7, 13-33, 13-39
9112-3018	3-4, 13-33
9112-3019	3-2, 3-3, 13-33
9112-3021	3-2, 13-33
9112-3022	9-7, 13-25, 13-33, 13-40
9112-3024	6-6
9112-3025	5-7
9112-3026	8-5
9112-3027	2-2, 13-42, 13-43
9112-3028	2-2, 13-42, 13-43
9112-3029	2-2, 13-42, 13-43
9112-3030	2-2, 13-42, 13-43
9112-3031	2-2, 13-43
9112-3032	5-2, 11-5
9112-3033	5-2, 11-5
9112-3035	12-1, 12-3
9112-3036	12-3
9112-3037	12-3, 13-32
9112-3038	12-3, 13-32
9112-3039	12-2, 13-4
9112-3041	12-2
9112-3042	12-3, 13-32
9112-3043	12-3, 13-32
9112-3044	12-3, 13-32
9112-3045	12-3, 13-32
9112-3049	10-6
9112-3050	13-7, 13-39
9112-3051	13-7
9112-3054	9-8, 13-7, 13-33, 13-39
9112-3055	13-7
9112-3056	13-7
9112-3057	13-7
9112-3061	13-7, 13-39
9112-3062	13-2, 13-7, 13-27, 13-39
9112-3064	13-5, 13-16
9112-3065	13-5, 13-16
9112-3066	13-5
9112-3067	10-4
9112-3073	13-25, 13-40
9112-3075	10-9, 13-21
9112-3077	4-4, 13-9
9112-3078	13-22
9112-3080	10-2
9112-3081	10-2
9112-3082	10-2
9112-3083	10-2
9112-3084	10-2
9112-3085	10-2
9112-3086	10-2
9112-3087	9-8
9112-3089	10-1, 10-2, 13-34
9112-3090	5-9
9112-3092	9-5
9112-3102	3-4

* *Complete revision of index.*

INDEX

PART NUMBER	PAGE
9112-3105	13-27
9112-3110	12-2
9112-3111	10-1
9112-3117	12-1, 12-2
9112-3119	6-2
9112-3124	2-1
9112-3125	13-8
9112-3126	7-4, 10-24
9112-3127	6-1
9112-3130	6-1
9112-3131	10-13
9112-3133	10-7
9112-3134	13-15
9112-3136	3-4
9112-3137	10-2
9112-3141	13-34
9112-3143	13-36
9112-3145	6-7
9112-3146	13-33
9112-3147	13-33
9112-3153	2-1, 12-2
9112-3160	13-41
9112-3166	11-2
9112-3169	13-32
9112-3170	13-32
9112-3171	13-32
9112-3173	13-32
9112-3176	13-1, 13-3
9112-3177	13-17
9112-3178	13-41
9112-3183	13-34
9112-4001	6-6, 6-7
9112-4002	6-6, 6-7
9112-4003	6-6, 6-7
9112-4004	6-6, 6-7
9112-4005	6-6, 6-7
9112-4006	6-6, 6-7
9112-4007	6-6, 6-7
9112-4008	6-6, 6-7
9112-4009	6-6, 6-7
9112-4010	6-6, 6-7
9112-4011	6-6, 6-7
9112-4012	6-6
9112-4013	6-6
9112-4014	6-6, 6-7
9112-4015	6-6
9112-4016	6-6, 6-7
9112-4017	6-6
9112-4018	6-6
9112-4019	6-6
9112-4020	6-6

PART NUMBER	PAGE
9112-4021	6-6
9112-4023	6-6
9112-4024	6-6, 6-7
9112-4025	6-6, 6-7
9112-4026	6-6
9112-4027	6-6, 6-7
9112-4028	6-6, 6-7
9112-4032	10-1
9112-4033	10-1
9112-4034	10-1
9112-4035	10-1
9112-4036	10-1
9112-4037	10-2
9112-4038	10-2
9112-4039	10-2
9112-4040	10-2
9112-4041	10-2
9112-4042	10-2
9112-4043	10-2
9112-4044	10-2
9112-4045	10-6
9112-4046	10-6
9112-4047	10-6
9112-4048	10-6
9112-4049	10-6
9112-4050	10-6
9112-4051	12-2
9112-4053	10-4
9112-4054	10-4
9112-4055	13-22
9112-4056	13-22
9112-4057	13-22
9112-4058	13-22
9112-4059	13-22
9112-4060	13-22
9112-4061	13-22
9112-4063	13-22
9112-4064	13-22
9112-4065	13-22
9112-4066	13-22
9112-4067	13-22
9112-4069	13-22
9112-4070	13-22
9112-4071	10-1
9112-4072	10-1
9112-4073	10-1
9112-4074	10-1
9112-4075	10-1
9112-4076	10-3
9112-4077	10-3
9112-4078	10-3

PART NUMBER	PAGE
9112-4079	10-5
9112-4081	10-5, 13-36
9112-4082	10-5, 13-36
9112-4083	10-7, 13-10
9112-4084	10-7, 13-10
9112-4085	10-7, 13-10
9112-4086	10-7, 13-10
9112-4087	10-8
9112-4088	10-8
9112-4089	10-8
9112-4090	10-8
9112-4091	10-8
9112-4092	10-24
9112-4093	10-24
9112-4094	6-4
9112-4095	10-7
9112-4096	10-7, 10-8, 13-34, 13-35, 13-36
9112-4097	10-7
9112-4098	10-7
9112-4099	10-7
9112-4100	10-7
9112-4101	10-7
9112-4102	10-7
9112-4103	10-7, 13-35
9112-4104	10-7
9112-4105	13-34
9112-4106	13-34
9112-4107	2-1
9112-4108	10-8
9112-4109	7-7
9112-4110	6-4
9112-4111	6-4
9112-4112	6-4
9112-4113	6-7
9112-4114	6-7
9112-5002	6-8
9112-5003	6-8
9112-5007	13-19
9112-5011	13-7
9112-5014	12-2
9112-5016	13-4
9112-5018	13-5
9112-5021	13-17
9112-5022	13-25
9112-5023	13-21
9112-5024	10-2
9112-5026	5-3, 5-4
9112-5027	5-9
9112-5030	3-4
9112-5031	3-4, 13-33

** Complete revision of index.*

INDEX

PART NUMBER	PAGE
9112-5032	3-4
9112-5040	7-6
9112-5042	13-17
9112-5043	13-7
9112-5044	13-27
9112-5047	6-1
9112-5049	5-3, 5-4
9112-5053	7-6
9112-5054	13-28
9112-5056	13-29
9112-5058	13-33
9112-5059	13-33
9112-5061	13-33
9112-5072	13-32
9112-5082	13-39
9112-5089	13-19
9112-5092	13-40
9112-5097	13-19
9112-5099	5-4
9112-5100	12-2
9112-5101	13-3
9112-5103	13-17
9112-5104	5-5
9112-5105	13-41
9112-5109	5-6
9112-6001	2-1
9112-6008	9-8, 13-7, 13-33, 13-39
9112-6009	3-4
9112-6010	9-7, 13-33
9112-6011	3-1
9112-6012	3-2
9112-6013	3-3
9112-6015	3-4
9112-6022	2-1
9112-6023	13-7, 13-39
9112-6024	13-7
9112-6025	13-7, 13-39
9112-6026	13-7, 13-39
9112-6027	13-7, 13-39
9112-6029	13-7
9112-6030	13-33
9112-6031	13-7
9112-6032	13-7
9112-6035	9-11, 13-21
9112-6036	10-2
9112-6037	10-2
9112-6040	13-27
9112-6048	2-1, 13-19
9112-6050	7-6, 7-7
9112-6051	7-6, 7-7
9112-6055	13-33
9112-6056	13-33
9112-6057	13-33
9112-6068	13-19
9112-6071	9-8
9112-6079	13-32
9112-6080	13-7, 13-39
9112-6081	13-19
9113-3001	12-1, 12-3
9113-3002	12-3
9113-3003	12-2
9113-3005	12-2
9113-3006	12-2
9113-5004	12-2
9113-5007	5-1, 5-2
9114-0001	2-1
9114-1104	5-6
9114-1182	13-5
9114-1183	13-5
9114-1193	11-3, 11-4
9114-1197	13-5, 13-16
9114-1198	2-1
9114-1218	2-1
9114-1231	5-6
9114-1253	2-1
9114-1256	13-5, 13-16
9114-1257	13-5, 13-16
9114-1258	13-5
9114-1259	13-5, 13-17
9114-1260	13-19, 13-32
9114-1265	13-5, 13-16
9114-1266	13-5
9114-1278	11-6, 11-7
9114-1307	9-11
9114-1316	9-9
9114-1317	5-3
9114-1322	5-6
9114-1329	2-1
9114-1332	13-8
9114-1350	13-13, 13-15
9114-1364	13-5
9114-1374	13-8
9114-1424	2-2, 13-42, 13-43
9114-1429	11-5
9114-1459	13-8
9114-1480	11-4
9114-1511	6-2
9114-1513	11-4
9114-3022	7-5
9114-3028	5-6
9114-3029	5-6
9114-3043	5-3
9114-3045	5-6
9114-3051	2-1
9114-3055	5-1, 5-3, 9-4, 9-5
9114-3087	5-1, 5-3, 5-4, 9-1
9114-3090	13-8
9114-3099	5-4, 11-5
9114-3108	11-8, 11-9, 11-10, 13-3, 13-5, 13-8, 13-17
9114-3112	5-3
9114-3114	11-6, 11-7
9114-3117	13-5, 13-16
9114-3118	7-3
9114-3120	12-2
9114-3122	5-4
9114-3124	5-4, 11-5
9114-3127	11-6, 11-7
9114-3128	11-6, 11-7
9114-3129	11-6, 11-7
9114-3130	11-6, 11-7
9114-3133	10-22
9114-3134	7-4
9114-3136	13-3
9114-3137	11-6, 11-7
9114-3138	11-6, 11-7
9114-3140	10-16
9114-3141	7-7
9114-3144	10-22
9114-3148	2-1
9114-3155	13-19, 13-38
9114-3156	13-5
9114-3160	10-22
9114-3163	13-1, 13-3
9114-3164	13-3
9114-3172	6-1, 9-1
9114-3174	5-3
9114-3182	12-2
9114-3190	13-8
9114-3192	5-1, 5-3, 11-1, 11-2
9114-3193	11-3, 11-4, 11-8, 11-9
9114-3201	10-13
9114-3202	13-1
9114-3210	13-5
9114-3220	13-8
9114-3270	13-5
9114-3280	12-2
9114-3281	12-2
9114-3282	12-2
9114-3283	12-2
9114-3284	12-2
9114-3285	12-2
9114-3286	12-2

* *Complete revision of index.*

INDEX

PART NUMBER	PAGE
9114-3287	12-2
9114-3288	12-2
9114-3290	12-3
9114-3292	12-2
9114-3302	5-3
9114-3314	5-4
9114-3315	5-3
9114-3316	5-5
9114-3329	5-3
9114-3331	11-7
9114-3338	10-26, 13-28
9114-3342	7-3
9114-3344	5-3
9114-3345	5-3
9114-3346	2-1
9114-3348	2-1
9114-3349	11-10
9114-3357	2-1
9114-3361	13-8
9114-3362	13-1
9114-4005	13-35
9114-4008	5-6
9114-4009	10-25
9114-4010	10-25
9114-4011	10-25
9114-4012	10-25
9114-4013	10-25
9114-4014	10-25
9114-4015	10-25
9114-4017	10-1, 10-5, 10-7, 10-8, 13-10
9114-4034	13-35
9114-4080	10-5, 13-36
9114-4093	10-18
9114-4094	10-18
9114-4095	10-18
9114-4098	10-18
9114-4099	10-18
9114-4128	10-1, 10-3, 10-5, 10-7, 10-8, 13-10, 13-34, 13-35, 13-36
9114-4149	10-19, 10-20
9114-4150	10-19, 10-20
9114-4151	10-19, 10-20
9114-4152	10-19, 10-20
9114-4153	10-19, 10-20
9114-4157	10-19, 10-20
9114-4158	10-14, 13-37
9114-4159	10-14
9114-4175	6-7
9114-4178	6-7
9114-4179	6-7
9114-4180	6-7
9114-4181	6-7
9114-4182	6-7
9114-4183	6-7
9114-4184	6-7
9114-4185	6-7
9114-4186	6-7
9114-4187	6-7
9114-4188	6-7
9114-4189	6-7
9114-4190	7-4
9114-4191	7-4, 7-5
9114-4192	7-4, 7-5
9114-4196	7-3
9114-4197	7-3
9114-4198	7-3
9114-4248	10-19, 10-20, 10-21
9114-4326	6-2
9114-4327	6-2
9114-4328	6-2
9114-4329	6-2
9114-4330	6-2
9114-4331	6-2
9114-4332	6-2
9114-4333	6-5
9114-4334	6-5
9114-4335	6-5
9114-4336	6-5
9114-4337	6-5
9114-4338	6-5
9114-4339	6-5
9114-4340	6-5
9114-4341	6-5
9114-4342	6-5
9114-4343	6-5
9114-4344	6-5
9114-4345	6-5
9114-4346	6-5
9114-4347	6-5
9114-4348	6-5
9114-4349	6-5
9114-4350	6-5
9114-4351	6-5
9114-4352	6-5
9114-4353	6-5
9114-4354	6-5
9114-4355	6-5
9114-4356	6-5
9114-4357	6-5
9114-4358	6-5
9114-4359	6-5
9114-4360	6-5
9114-4361	6-5
9114-4362	6-5
9114-4363	6-5
9114-4364	6-5
9114-4365	6-5
9114-4366	6-5
9114-4367	6-5
9114-4368	6-5
9114-4369	6-4
9114-4370	6-4
9114-4371	6-4
9114-4372	6-4
9114-4373	6-4
9114-4374	6-4
9114-4376	6-4
9114-4377	6-4
9114-4378	6-4
9114-4379	6-4
9114-4380	6-4
9114-4381	6-4
9114-4382	6-3
9114-4383	6-3
9114-4384	6-3
9114-4385	6-3
9114-4386	6-3
9114-4387	6-3
9114-4388	6-3
9114-4389	6-3
9114-4390	6-3
9114-4391	6-3
9114-4392	6-3
9114-4393	6-3
9114-4394	6-3
9114-4395	6-3
9114-4396	6-3
9114-4397	6-3
9114-4398	6-3
9114-4399	6-3
9114-4400	6-3
9114-4401	6-3
9114-4402	6-3
9114-4403	6-3
9114-4404	6-3
9114-4405	6-3
9114-4406	6-3
9114-4407	6-3
9114-4408	6-3
9114-4442	6-4
9114-4447	7-4

** Complete revision of index.*

INDEX

PART NUMBER	PAGE
9114-4448	7-4
9114-5021	13-5
9114-5030	7-4
9114-5031	11-6, 11-7
9114-5033	13-3
9114-5034	13-3
9114-5035	13-3
9114-5050	13-8
9114-5096	13-8
9114-5098	13-5
9114-5130	6-2
9114-5134	13-42
9114-5135	13-42
9114-5136	13-42
9114-6012	2-1
9114-6037	5-4
9114-6047	9-11
9114-6052	3-3, 9-8, 13-33
9114-6053	13-13, 13-15
9114-6054	13-13, 13-15
9114-6058	5-4
9114-6059	7-7
9114-6071	2-1
9114-6072	2-1
9114-6101	5-3
9114-6111	13-42
9114-6112	13-42
9115-1002	5-7
9115-3031	5-5
9115-5016	5-5
9116-1066	2-2
9116-1067	2-2
9116-1068	2-2
9116-1083	13-19
9116-1185	13-38
9116-1269	13-32, 13-35
9116-1310	5-3
9116-1313	5-3
9116-1379	13-19
9116-3012	7-4
9116-3028	12-2
9116-3044	10-21
9116-3045	13-35
9116-3049	13-19, 13-32
9116-3077	13-32
9116-3078	13-32
9116-3093	7-7
9116-3121	13-29, 13-30
9116-3122	5-3, 9-5
9116-3129	5-7
9116-3130	12-2
9116-3137	5-7
9116-3164	13-37
9116-3191	13-29, 13-30
9116-3201	5-4, 9-5
9116-3256	12-2
9116-3260	5-3
9116-4017	10-21
9116-4028	13-35
9116-4029	13-35
9116-4030	13-35
9116-4031	13-35
9116-4053	13-37
9116-4054	13-37
9116-4055	13-37
9116-4056	13-37
9116-4057	13-37
9116-4058	13-37
9116-4059	13-37
9116-4060	13-37
9116-4063	13-37
9116-5006	13-38
9116-6012	2-2, 13-43
9116-6013	13-19, 13-32
9116-6062	3-5, 9-8, 13-32, 13-35
9116-6063	2-2, 13-43
9120-4460	10-8
9120-4465	10-7
9120-4466	10-7
9123-3012	2-1, 11-1, 11-2
9130-102 1	3-24
9130-1020	13-24, 13-27
9130-1064	13-24
9130-1065	13-24
9130-1083	4-4
9130-1086	5-6
9130-3019	13-27
9130-3021	2-1
9130-3037	10-24
9130-3038	13-24
9130-3041	13-24
9130-3047	12-2
9130-3049	9-5
9130-3056	5-1, 5-3
9130-3057	5-6
9130-3058	9-2, 10-22
9130-3059	9-2, 9-3
9130-3067	13-8
9130-3076	13-24
9130-4021	10-24
9130-4022	10-24
9130-4024	10-24
9130-5016	4-4
9130-6030	4-4
9132-1001	5-6
9132-1002	5-6
9132-1013	5-3
9132-1014	5-3
9132-1017	13-1
9132-3001	12-1, 12-2
9132-3002	12-1, 12-3, 13-32
9132-3003	12-1, 12-3, 13-32
9132-3004	12-3, 13-32
9132-3005	12-3, 13-32
9132-3006	5-3
9132-3007	5-6, 9-2
9132-3008	5-3
9132-3010	5-6
9132-3011	9-2
9132-3020	12-2
9132-3022	5-3, 9-1
9132-3023	5-3, 9-1
9132-5001	5-3, 5-4
9132-5003	13-1
9132-5004	5-6
9132-5006	7-6
9132-5007	5-3, 5-4
9132-5008	7-6
9132-5011	13-30
9132-5012	10-26
9132-5019	13-32
9132-5030	13-19
9132-5031	5-3, 5-4
9132-5033	12-2
9132-5034	13-1
9132-5035	13-19
9132-6001	2-1
9132-6003	2-1
9132-6004	2-1
9132-6005	2-1
9132-6006	5-3
9132-6017	13-32
9132-6019	2-1
9132-6024	2-1
9132-6025	2-1
9132-6026	13-19
9133-5026	13-43
9134-3010	12-2
9136-3009	13-5
9136-3025	7-4
9136-4004	11-7
9136-4005	11-7
9136-4006	11-7

* *Complete revision of index.*

INDEX

PART NUMBER	PAGE	PART NUMBER	PAGE	PART NUMBER	PAGE
9136-4007	11-7				
9136-4008	11-7				
9137-5002	5-3, 5-4				

* *Complete revision of index.*

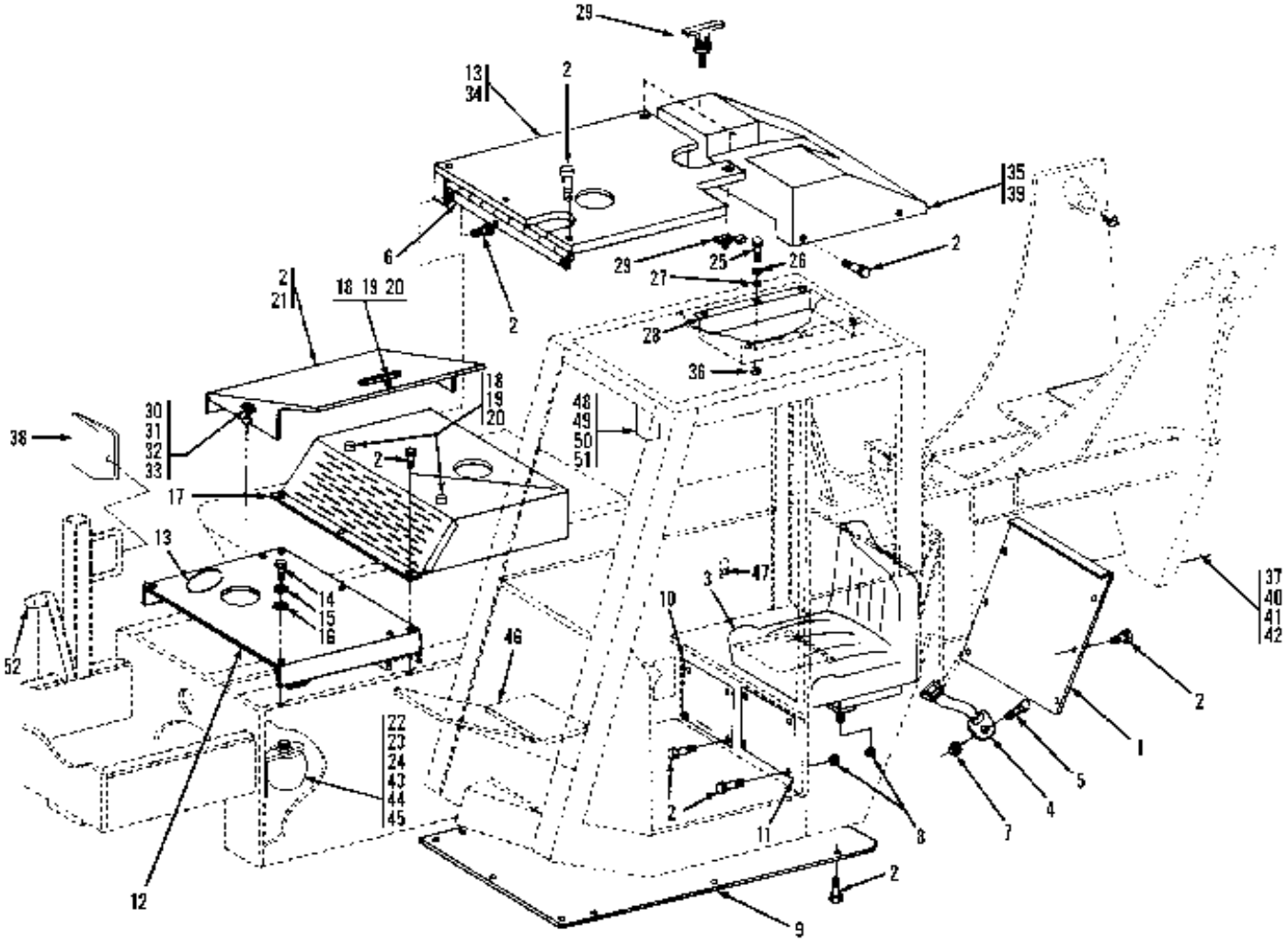

* *Added item 52.*

CHASSIS & ATTACHING PARTS
Frame Shrouding & Trim
Starting Serial No. 0188002
Original Issue 1-90
Revised 2-10-97

Item	Part No.	Qty.	Description Of Part
	9112-6001	Ref	FRAME WELDMENT (532C-6)
	9112-6048	Ref	FRAME WELDMENT (534C-6)
	9108-6040	Ref	CAB WELDMENT
1	9108-1259	1	REAR CAB COVER
2	7714-3003	37	WHIZ-LOK SCREW, 5/16-18X5/8
3	9103-3485	1	SEAT (standard)
	9112-4107	1	SLIDE ADJ. KIT (use with std. seat)
	9104-3237	1	GRAMMER SEAT (optional)
	8820-1020	4	HEX HD CAPSCREW, 5/16-18X1, GR5 (use with optional seat)
4	9103-3029	1	SEAT BELT
5	8820-1050	2	HEX HD CAPSCREW, 7/16-14X1, GR5
6	9112-1102	1	HINGE
7	8850-1007	2	HEX NUT, 7/16-14
8	7714-3006	8	WHIZ-LOCK NUT
9	9108-1258	1	BELLY PAN
10	9108-1210	1	VALVE ACCESS COVER
11	9108-1475	1	HEATER COVER PLATE
12	9108-1681	1	MAINTENANCE DECK
13	9020-6194	25"	TRIM-LOK
	1440-2248	AR	3M ADHESIVE
14	8820-1017	4	HEX HD CAPSCREW, 5/16-18X5/8, GR5
15	8855-1010	4	LOCKWASHER, 5/16
16	8856-1003	4	FLAT WASHER, 5/16
17	9108-6060	1	FRONT ENGINE COVER
18	9108-3173	3	RUBBER HD SCREW BUMPER
19	8855-1007	3	LOCKWASHER, #10
20	8850-1612	3	HEX NUT, #10-24
21	9108-6088	1	TANK COVER WELDMENT
22	2492-1393	1	HORN
23	2492-1394	1	HORN BRACKET
24	8820-1017	1	HEX HD CAPSCREW, 5/16-18X5/8, GR5

Item	Part No.	Qty.	Description Of Part
25	8830-1093	4	ROUND HD MACHINE SCREW, #10-24X3/4
26	8855-4900	4	INTERNAL TOOTH WASHER
27	8859-1200	4	O-RING
28	9103-3102	1	MANUAL HOLDER
29	9130-3021	2	"T" HANDLE
30	9020-7458	2	DRAW LATCH
31	8830-1193	8	ROUND HD MACHINE SCREW, #10-32X1/2
32	8855-1007	8	LOCKWASHER, #10
33	8850-1613	4	HEX NUT, #10-32
34	9112-1089	1	REAR ENGINE COVER
35	9112-6022	1	REAR COVER WELDMENT
36	8850-1612	4	HEX NUT, #10-24
37	9114-0001	1	COUNTERWEIGHT
38	8368-3291	1	MIRROR (starting S/N 0288572. For earlier models use service kit 9108-5099)
39	9020-0755	1	WEATHERSTRIP (24" long)
40	9112-1209	1	COUNTERWEIGHT PLATE
41	8820-1142	2	HEX HD CAPSCREW, 1-8X4-1/2, GR5
42	8856-1011	4	WASHER, 1"
43	8855-1010	1	LOCKWASHER, 5/16
44	8856-1003	1	FLAT WASHER, 5/16
45	2492-1395	1	NUT
46	9108-1202	1	FORMED FENDER
47	8521-1040	1	PLUG BUTTON
48	9103-3320	1	TILT GAGE
49	8820-4912	1	HEX HD CAPSCREW, 1/4-20X1, GR5
50	8856-1107	1	FLAT WASHER, 1/4
51	8852-1204	1	LOCKNUT, 1/4-20
*52	9114-3051	1	BUSHING

** Added item 52.*

CHASSIS & ATTACHING PARTS
Frame Weldment/Shrouding & Trim
Starting Serial No. 0288777
Original Issue 10-95
Revised 5-6-97

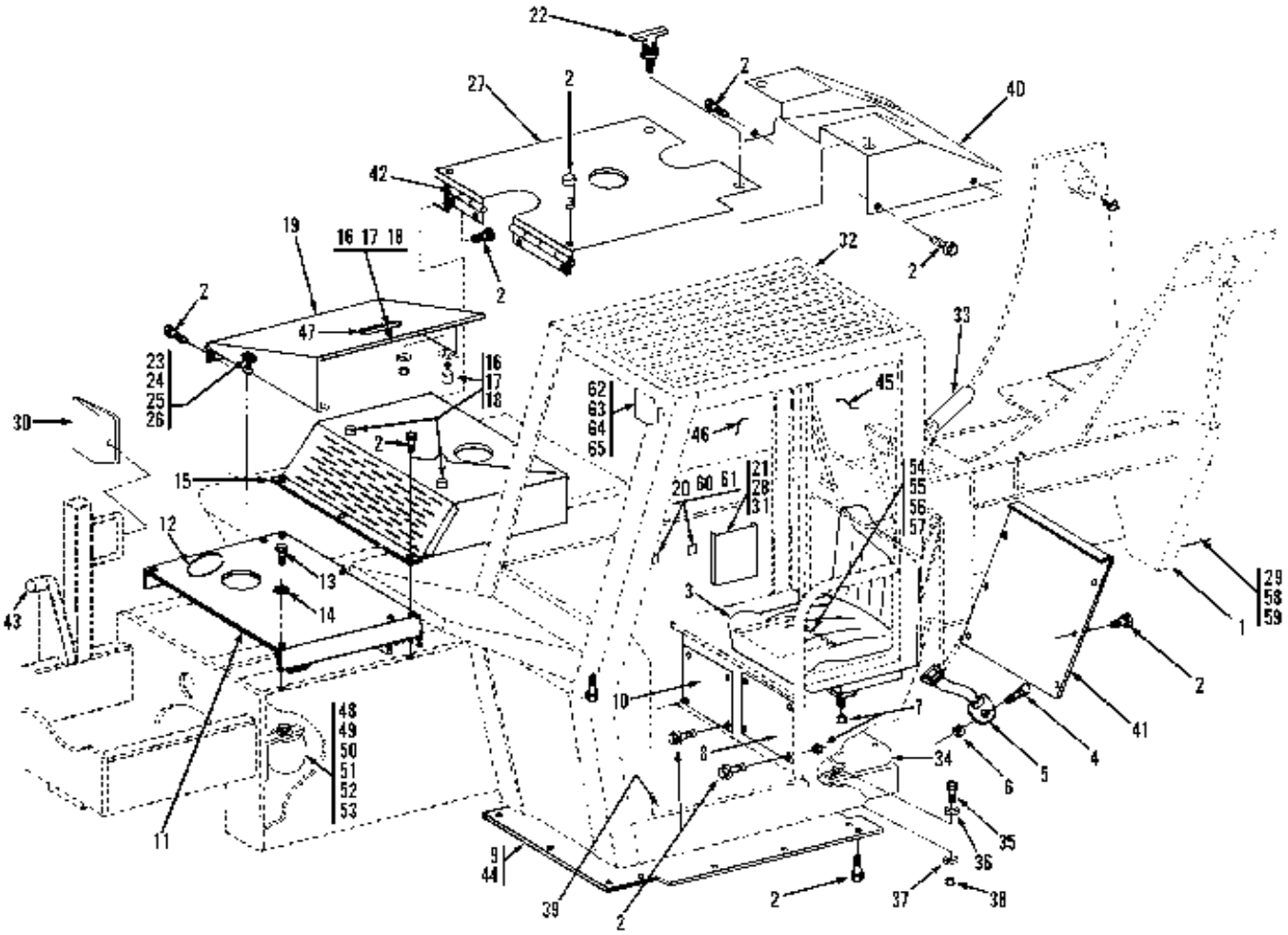

** Added items 62 thru 65.*

CHASSIS & ATTACHING PARTS
Frame Weldment/Shrouding & Trim
Starting Serial No. 0288777
Original Issue 10-95
Revised 5-6-97

Item	Part No.	Qty.	Description Of Part
1	9112-6048	1	FRAME WELDMENT (534C-6)
	9112-6001	1	FRAME WELDMENT (532C-6)
2	7714-3003	42	WHIZ-LOK SCREW
3	9103-3485	1	SEAT (w/armrest)
	9112-4107	1	SLIDE ADJ. KIT
4	8820-1050	2	HEX HD CAPSCREW, 7/16-14 x 1
5	9103-3029	1	SEAT BELT
6	8850-1007	2	HEX NUT, 7/16-14
7	7714-3006	8	WHIZ-LOK NUT
8	9108-1475	1	HEATER COVER PLATE
9	9108-1709	1	BELLY PAN
10	9114-1329	1	VALVE ACCESS COVER
11	9108-1681	1	DECK COVER
12	9020-6194	AR	TRIM-LOK
13	9112-3124	4	WHIZ-LOC SCREW, 5/16-18 x 5/8
14	8856-1003	4	FLAT WASHER, 5/16
15	9108-6060	1	FRONT ENGINE COVER
16	9108-3173	5	RUBBER HD SCREW BUMPER
17	8855-1007	5	LOCKWASHER, #10
18	8850-1612	5	HEX NUT, #10-24
19	9108-6162	1	TANK COVER WELD
20	9114-6071	1	COVER WELDMENT (route dip stick through cab wall)
21	9103-3102	1	MANUAL HOLDER
22	9130-3021	1	T-HANDLE
23	9020-7458	2	DRAW LATCH
24	8830-1193	12	ROUND HD MACHINE SCREW, #10-32 x 1/2
25	8855-1007	15	LOCKWASHER, #10
26	8850-1613	6	HEX NUT, #10
27	9112-1089	1	REAR ENGINE COVER
28	8832-1030	4	SELF-TAP SCREW
29	9114-0001	1	COUNTERWEIGHT
30	8368-3291	1	MIRROR
31	8855-4900	4	INTERNAL TOOTH WASHER
32	9114-6012	1	CAB WELDMENT
33	7149-2134	AR	SPLIT LOOM, 3/4
34	9112-1219	1	VALVE SUPPORT
35	8820-1020	4	HEX HD CAPSCREW, 5/16-18 x 1, GR5

Item	Part No.	Qty.	Description Of Part
36	8856-1003	4	FLAT WASHER, 5/16
37	8855-1010	4	LOCKWASHER, 5/16
38	8850-1005	4	HEX NUT, 5/16-18
39		Ref	FLOOR PLATE ASSY (see page 7-6 for details)
40	9112-6022	1	REAR COVER WELDMENT
41	9114-1198	1	REAR CAB COVER
42	9112-1102	1	HINGE
43	9114-3051	1	BUSHING
44	9108-3533	10	FENDER WASHER
45	9108-3159	1	WEATHERSTRIP (not shown, rear window)
46	9108-3161	1	WEATHERSTRIP (not shown, right side window)
47	1440-2248	AR	3-M ADHESIVE
48	2492-1393	1	HORN
49	2492-1394	1	HORN BRACKET
50	2492-1395	1	NUT
51	8856-1003	1	FLAT WASHER, 5/16
52	8855-1010	1	LOCKWASHER, 5/16
53	8820-1017	1	HEX HD CAPSCREW, 5/16-18X5/8, GR5
54	8850-1008	2	HEX NUT (items 54 through 57 are used on seat mount plate)
55	8855-1013	1	LOCKWASHER, 1/2
56	8856-1111	2	WASHER
57	8820-1067	1	HEX HD CAPSCREW, 1/2-13X1-1/2, GR5
58	8856-1011	4	PUNCHED WASHER
59	8820-1142	4	HEX HD CAPSCREW, 1-8X4-1/2, GR5
60	9114-6072	1	COVER WELDMENT
61	8820-1001	4	HEX HD CAPSCREW, 1/4-20X1/2, GR5
*62	9103-3320	1	TILT GAGE
*63	8820-4912	1	HEX HD CAPSCREW, 1/4-20X1, GR5
*64	8856-1107	1	FLAT WASHER, 1/4
*65	8852-1204	1	LOCKNUT, 1/4-20

** Added items 62 thru 65.*

CHASSIS & ATTACHING PARTS
Frame Weldment/Shrouding & Trim
Starting Serial No. 0488238
Original Issue 8-97

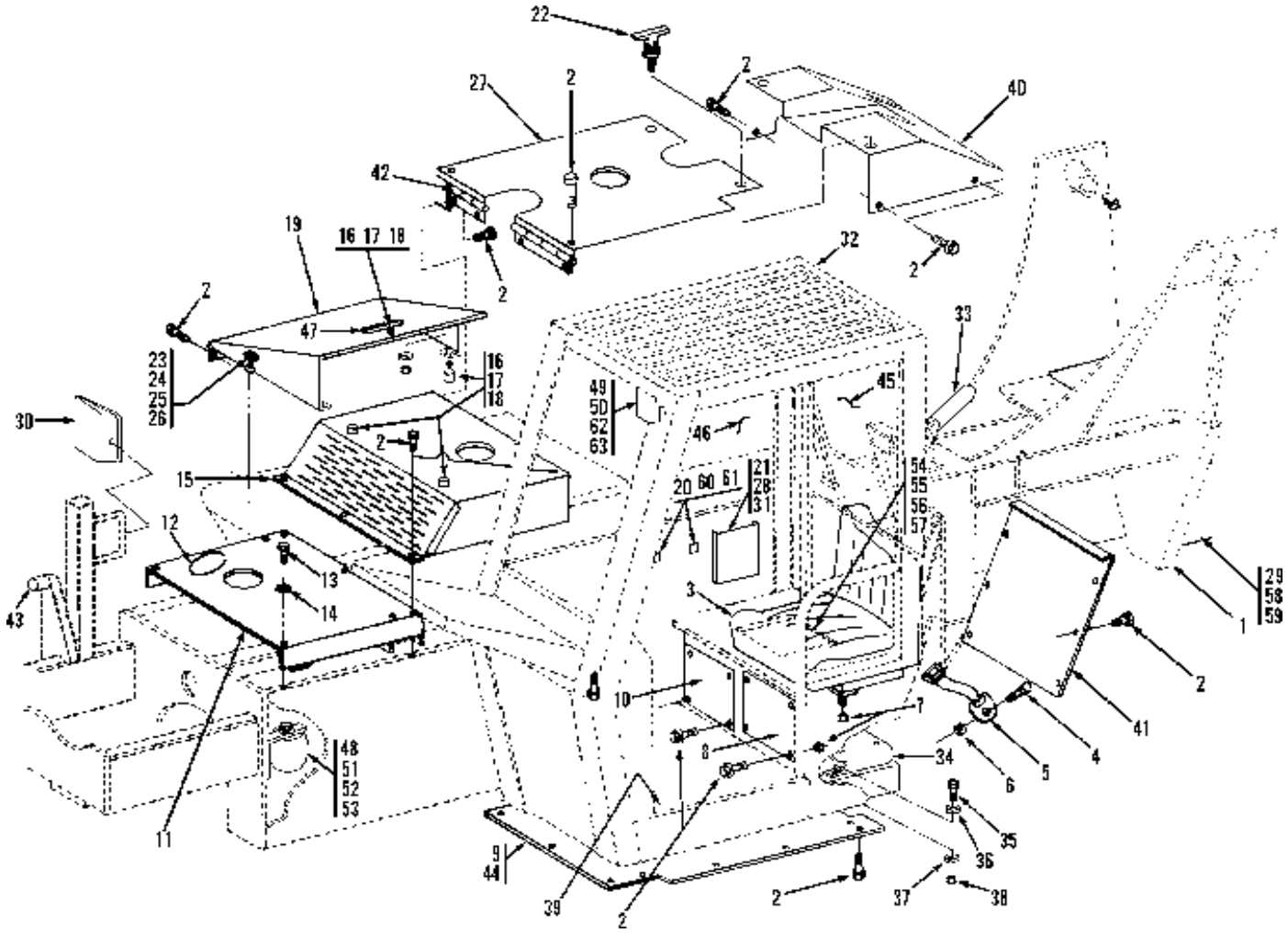

CHASSIS & ATTACHING PARTS
Frame Weldment/Shrouding & Trim
Starting Serial No. 0488238
Original Issue 8-97

Item	Part No.	Qty.	Description Of Part
1	9112-6048	1	FRAME WELDMENT (534C-6)
2	7714-3003	42	WHIZ-LOK SCREW
3	9103-3485	1	SEAT (w/armrest)
	9112-4107	1	SLIDE ADJ. KIT
4	8820-1050	2	HEX HD CAPSCREW, 7/16-14 x 1
5	9103-3029	1	SEAT BELT
6	8850-1007	2	HEX NUT, 7/16-14
7	7714-3006	8	WHIZ-LOK NUT
8	9108-1475	1	HEATER COVER PLATE
9	9108-1709	1	BELLY PAN
10	9114-1329	1	VALVE ACCESS COVER
11	9108-1681	1	DECK COVER
12	9020-6194	AR	TRIM-LOK
13	9112-3124	4	WHIZ-LOC SCREW, 5/16-18 x 5/8
14	8856-1003	4	FLAT WASHER, 5/16
15	9108-6060	1	FRONT ENGINE COVER
16	9108-3173	6	RUBBER HD SCREW BUMPER
17	8855-1007	5	LOCKWASHER, #10
18	8850-1612	6	HEX NUT, #10-24
19	9108-6175	1	TANK COVER WELD
20	9114-6071	1	COVER WELDMENT (route dip stick through cab wall)
21	9103-3102	1	MANUAL HOLDER
22	9130-3021	2	T-HANDLE
23	9020-7458	2	DRAW LATCH
24	8830-1193	12	ROUND HD MACHINE SCREW, #10-32 x 1/2
25	8855-1007	15	LOCKWASHER, #10
26	8850-1613	6	HEX NUT, #10
27	9112-1089	1	REAR ENGINE COVER
28	8832-1030	4	SELF-TAP SCREW
29	9114-0001	1	COUNTERWEIGHT
30	8368-3291	1	MIRROR
31	8855-4900	4	INTERNAL TOOTH WASHER
32	9114-6012	1	CAB WELDMENT
33	7149-2134	AR	SPLIT LOOM, 3/4
34	9112-1219	1	VALVE SUPPORT

Item	Part No.	Qty.	Description Of Part
35	8820-1020	4	HEX HD CAPSCREW, 5/16-18X1, GR5
36	8856-1003	4	FLAT WASHER, 5/16
37	8855-1010	4	LOCKWASHER, 5/16
38	8850-1005	4	HEX NUT, 5/16-18
39		Ref	FLOOR PLATE ASSY (see page 7-6 for details)
40	9112-6022	1	REAR COVER WELDMENT
41	9114-1198	1	REAR CAB COVER
42	9112-1102	1	HINGE
43	9114-3051	1	BUSHING
44	9108-3533	10	FENDER WASHER
45	9108-3159	1	WEATHERSTRIP (not shown, rear window)
46	9108-3161	1	WEATHERSTRIP (not shown, right side window)
47	1440-2248	AR	3-M ADHESIVE
48	9114-3357	1	HORN
49	8856-1107	1	FLAT WASHER, 1/4
50	8852-1204	1	LOCKNUT, 1/4-20
51	8856-1003	1	FLAT WASHER, 5/16
52	8855-1010	1	LOCKWASHER, 5/16
53	8820-1017	1	HEX HD CAPSCREW, 5/16-18X5/8, GR5
54	8850-1008	2	HEX NUT (items 54 through 57 are used on seat mount plate)
55	8855-1013	1	LOCKWASHER, 1/2
56	8856-1111	2	WASHER
57	8820-1067	1	HEX HD CAPSCREW, 1/2-13X1-1/2, GR5
58	8856-1011	4	PUNCHED WASHER
59	8820-1142	4	HEX HD CAPSCREW, 1-8X4-1/2, GR5
60	9114-6072	1	COVER WELDMENT
61	8820-1001	4	HEX HD CAPSCREW, 1/4-20X1/2, GR5
62	9103-3320	1	TILT GAGE
63	8820-4912	1	HEX HD CAPSCREW, 1/4-20X1, GR5

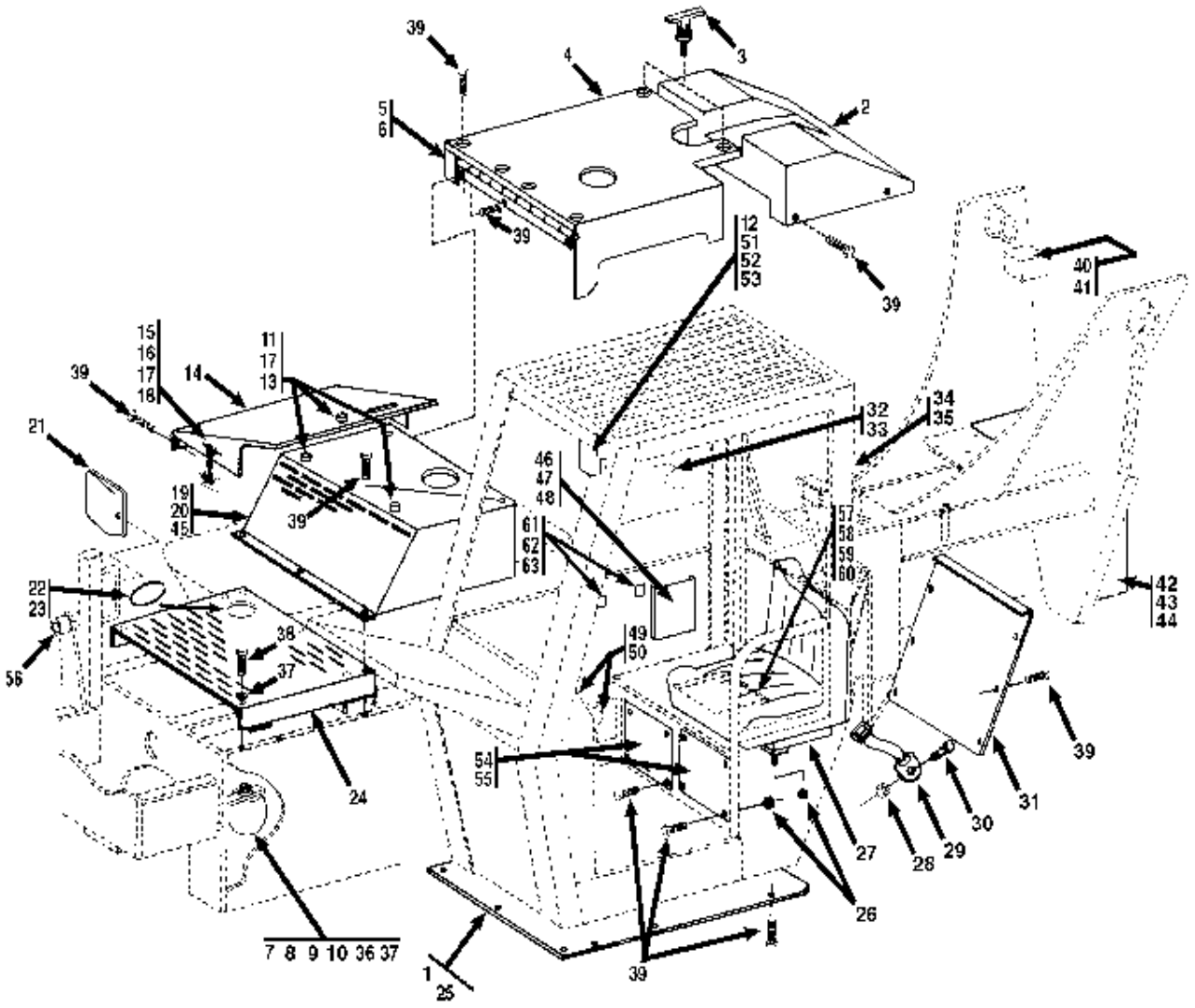

** Changed part numbers on items 1, 25 & 49, added items 57 thru 63.*

CHASSIS & ATTACHING PARTS
Frame Shrouding & Trim (534C-6 TURBO)

Starting Serial No. 0388043
Original Issue 7-95
Revised 3-31-97

Item	Part No.	Qty.	Description Of Part
	9132-6001	Ref	FRAME WELDMENT
	9114-6012	Ref	CAB WELDMENT
* 1	9108-3533	10	FENDER WASHER
2	9132-6004	1	REAR COVER WELDMENT
3	9130-3021	2	T-HANDLE
4	9132-6003	1	REAR ENGINE COVER
5	9114-1218	1	HINGE
6	9114-1253	1	SPACER BAR
7	2492-1393	1	HORN
8	2492-1394	1	HORN BRACKET
9	2492-1395	1	NUT
10	8820-1017	1	HEX HD CAPSCREW, 5/16-18X5/8, GR5
11	9108-3173	5	RUBBER HD. SCREW BUMPER
12	9103-3320	1	TILT GAGE
13	8850-1612	5	HEX NUT, #10-24
14	9108-6162	1	TANK COVER WELDMENT
15	9020-7458	2	DRAW LATCH
16	8830-1193	8	RD.HD. MACHINE SCREW, #10-32X1/2
17	8855-1007	13	LOCK WASHER, #10
18	8850-1613	4	HEX NUT, #10-32
19	9132-6005	1	FRONT ENGINE COVER
20	9114-3148	1	RUBBER AIR DAM
21	8368-3291	1	MIRROR
22	9020-6194	41”	TRIM-LOK
23	1440-2248	AR	ADHESIVE
24	9108-1681	1	DECK COVER
* 25	9108-1709	1	BELLY PAN
26	7714-3006	8	WHIZ-LOC NUT, 5/16-18
27	9103-3485	1	SEAT W/ARMREST (STD)
	9112-4107	1	SLIDE ADJ. KIT (use with std. seat)
	9104-3237	1	GRAMMER SEAT (OPTIONAL)
28	8850-1007	2	HEX NUT, 7/16-14
29	9103-3029	1	SEAT BELT (not used with optional seat)
30	8820-1050	2	HEX HD CAPSCREW, 7/16-14X1, GR5
	8820-1020	4	HEX HD CAPSCREW, 5/16-18X1, GR5 (use with optional seat only)
31	9114-1198	1	REAR CAB COVER

Item	Part No.	Qty.	Description Of Part
32		Ref	RIGHT SIDE WINDOW (see page 2-4 for details)
33	9108-3161	1	WEATHER STRIPPING
34		Ref	REAR WINDOW (see page 2-4 for details)
35	9108-3159	1	WEATHER STRIPPING
36	8855-1010	1	LOCKWASHER, 5/16
37	8856-1003	4	FLAT WASHER, 5/16
38	9112-3124	4	WHIZ-LOC SCREW, 5/16-18X1/2
39	7714-3003	52	WHIZ-LOC SCREW, 5/16-18X5/8
40	9123-3012	1	BACKUP ALARM
41	8821-2224	2	SOCKET HD CAPSCREW, 5/16-18X5/8
42	9114-0001	1	COUNTERWEIGHT
43	8820-1142	4	HEX HD CAPSCREW, 1-8X4-1/2, (hand torque to 545-595 ft.lb.)
44	8856-1011	4	WASHER, 1”
45	9020-0755	24"	WEATHER STRIPPING
46	9103-3102	1	MANUAL HOLDER
47	8832-1030	4	SELF TAPPING SCREW
48	8855-4900	4	INTERNAL TOOTH WASHER
*49	9112-3153	1	SERIAL NUMBER & ATTACH PLATE
50	8834-1022	4	DRIVE SCREW
51	8820-4912	1	HEX HD CAPSCREW, 1/4-20X1, GR5
52	8856-1107	1	FLAT WASHER
53	8852-1204	1	LOCK NUT, 1/4-20
54	9108-1475	1	HEATER COVER PLATE
55	9114-1329	1	VALVE ACCESS COVER
56	9114-3051	1	BUSHING
*57	8850-1008	2	HEX NUT, 1/2 (items 57 thru 60 are used on seat mount plate)
58	8855-1013	1	LOCKWASHER, 1/2
59	8856-1111	2	WASHER, 1/2
60	8820-1067	1	HEX HD CAPSCREW, 1/2-13X1-1/2, GR5
61	9114-6071	1	COVER WELDMENT (route dipstick through cab wall)
62	9114-6072	1	COVER WELDMENT
63	8820-1001	4	HEX HD CAPSCREW, 1/4-20X1/2, GR5

** Changed part numbers on items 1, 25 & 49, added items 57 thru 63.*

CHASSIS & ATTACHING PARTS
Frame Shrouding & Trim (534C-6 TURBO)

Starting Serial No. 0488238
Original Issue 10-97
Revised 2-17-98

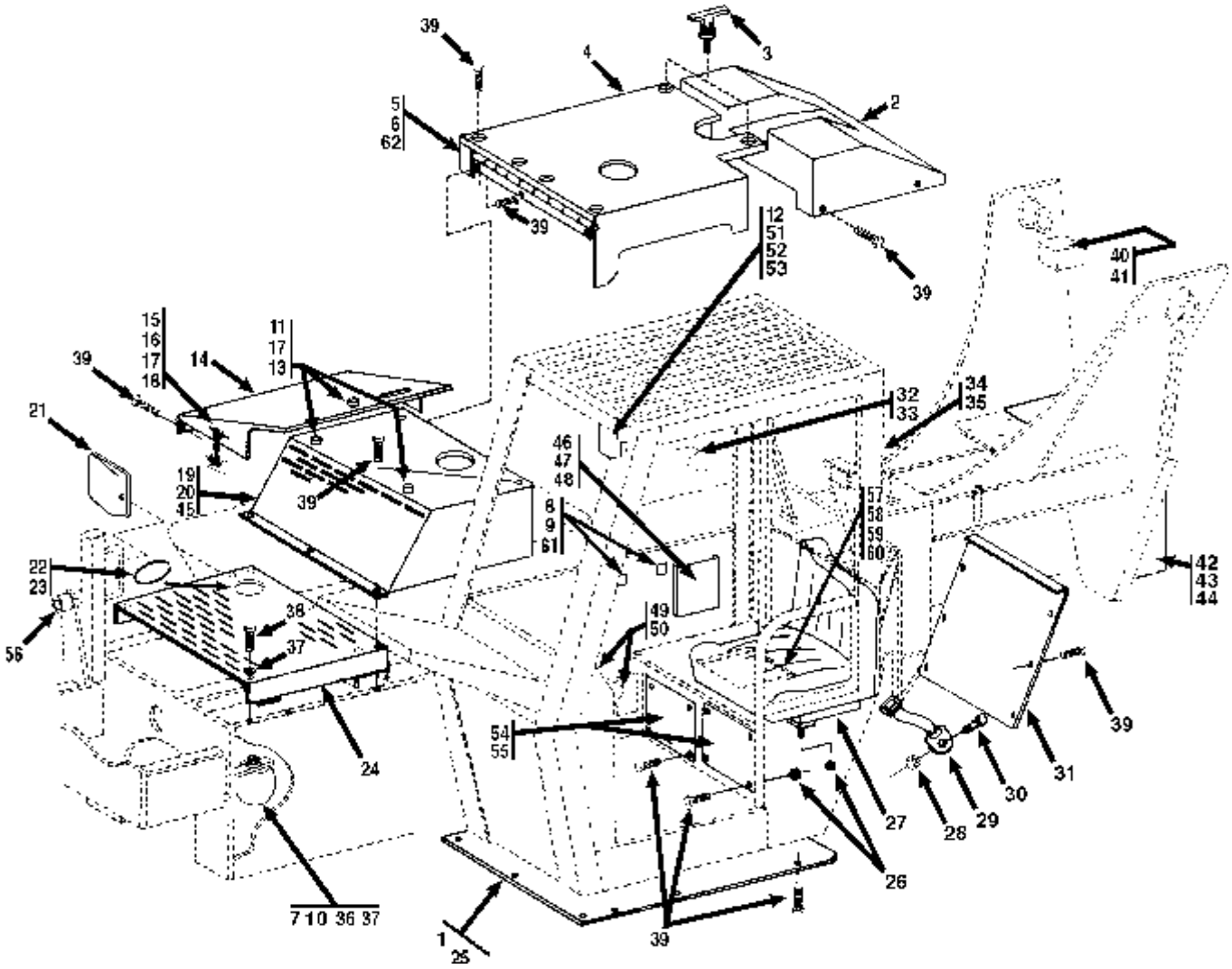

Changed part number on item 20, Qty. on item 39 and added item 62.

CHASSIS & ATTACHING PARTS
Frame Shrouding & Trim (534C-6 TURBO)
Starting Serial No. 0488238
Original Issue 10-97
Revised 2-17-98

Item	Part No.	Qty.	Description Of Part
	9132-6001	Ref	FRAME WELDMENT
	9114-6012	Ref	CAB WELDMENT
1	9108-3533	10	FENDER WASHER
2	9132-6019	1	REAR COVER WELDMENT
3	9130-3021	2	T-HANDLE
4	9132-6025	1	REAR ENGINE COVER
5	9114-1218	1	HINGE
6	9114-1253	1	SPACER BAR
7	9114-3357	1	HORN
8	9114-6072	1	COVER WELDMENT
9	8820-1001	4	HEX HD CAPSCREW, 1/4-20X1/2, GR5
10	8820-1017	1	HEX HD CAPSCREW, 5/16-18X5/8, GR5
11	9108-3173	6	RUBBER HD. SCREW BUMPER
12	9103-3320	1	TILT GAGE
13	8850-1612	6	HEX NUT, #10-24
14	9108-6175	1	TANK COVER WELDMENT
15	9020-7458	2	DRAW LATCH
16	8830-1193	8	RD.HD.MACHINE SCREW, #10-32X1/2
17	8855-1007	14	LOCK WASHER, #10
18	8850-1613	4	HEX NUT, #10-32
19	9132-6024	1	FRONT ENGINE COVER
* 20	9114-3346	1	RUBBER AIR DAM
21	8368-3291	1	MIRROR
22	9020-6194	67”	TRIM-LOK
23	1440-2248	AR	ADHESIVE
24	9108-1681	1	DECK COVER
25	9108-1709	1	BELLY PAN
26	7714-3006	8	WHIZ-LOC NUT, 5/16-18
27	9103-3485	1	SEAT W/ARMREST (STD)
	9112-4107	1	SLIDE ADJ. KIT (use with std. seat)
	9104-3237	1	GRAMMER SEAT (OPTIONAL)
28	8850-1007	2	HEX NUT, 7/16-14
29	9103-3029	1	SEAT BELT (not used with optional seat)
30	8820-1050	2	HEX HD CAPSCREW, 7/16-14X1, GR5
	8820-1020	4	HEX HD CAPSCREW, 5/16-18X1, GR5 (use with optional seat only)

Item	Part No.	Qty.	Description Of Part
31	9114-1198	1	REAR CAB COVER
32		Ref	RIGHT SIDE WINDOW (see page 2-4 for details)
33	9108-3161	1	WEATHER STRIPPING
34		Ref	REAR WINDOW (see page 2-4 for details)
35	9108-3159	1	WEATHER STRIPPING
36	8855-1010	1	LOCKWASHER, 5/16
37	8856-1003	4	FLAT WASHER, 5/16
38	9112-3124	4	WHIZ-LOC SCREW, 5/16-18X1/2
* 39	7714-3003	53	WHIZ-LOC SCREW, 5/16-18X5/8
40	9123-3012	1	BACKUP ALARM
41	8821-2224	2	SOCKET HD CAPSCREW, 5/16-18X5/8
42	9114-0001	1	COUNTERWEIGHT
43	8820-1142	4	HEX HD CAPSCREW, 1-8X4-1/2, (hand torque to 545-595 ft.lb.)
44	8856-1011	4	WASHER, 1”
45	9020-0755	24"	WEATHER STRIPPING
46	9103-3102	1	MANUAL HOLDER
47	8832-1030	4	SELF TAPPING SCREW
48	8855-4900	4	INTERNAL TOOTH WASHER
49	9112-3153	1	SERIAL NUMBER & ATTACH PLATE
50	8834-1022	4	DRIVE SCREW
51	8820-4912	1	HEX HD CAPSCREW, 1/4-20X1, GR5
52	8856-1107	1	FLAT WASHER
53	8852-1204	1	LOCK NUT, 1/4-20
54	9108-1475	1	HEATER COVER PLATE
55	9114-1329	1	VALVE ACCESS COVER
56	9114-3051	1	BUSHING
57	8850-1008	2	HEX NUT, 1/2 (items 57 thru 60 are used on seat mount plate)
58	8855-1013	1	LOCKWASHER, 1/2
59	8856-1111	2	WASHER, 1/2
60	8820-1067	1	HEX HD CAPSCREW, 1/2-13X1-1/2, GR5
61	9114-6071	1	COVER WELDMENT (route dipstick through cab wall)
* 62	9114-3348	2	CLAMP BAR

**Changed part number on item 20, Qty. on item 39 and added item 62.*

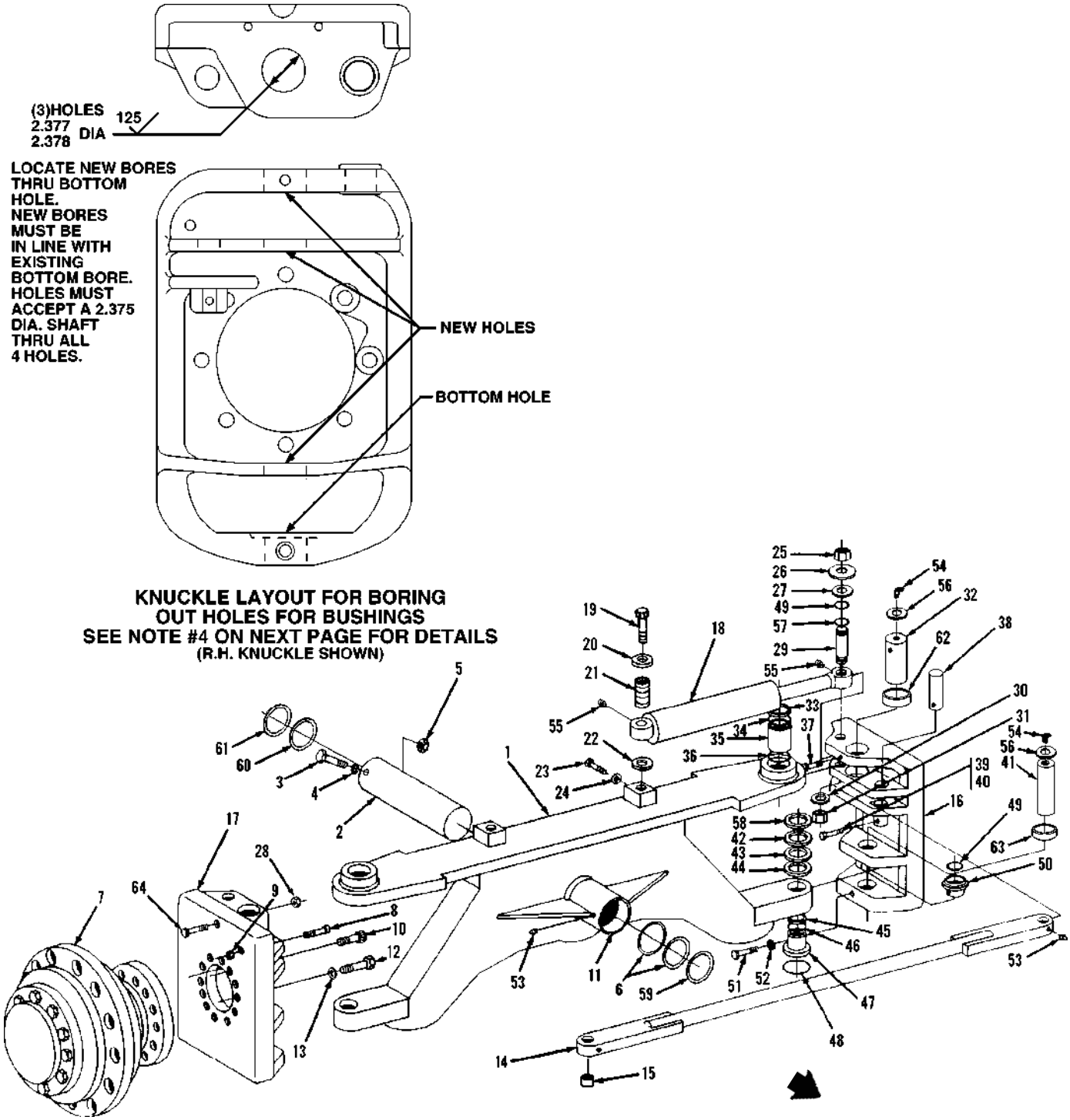

FRONT OF MACHINE

NOTE #1: When 9108-1384 Pivot Pin breaks, order part number 9108-5077 Steer Cylinder Pivot Block Kit for the replacement parts needed to accommodate new pivot pins.

NOTE #2: Cylinder base end must be free to rotate. Shim steer cylinder base end as required to maintain a total max. gap of 1/16".

NOTE #3: Shim bottom knuckles as required to maintain no more than 1/32" movement. Shim top knuckles as required to maintain no more than 1/16" gap. Must have a minimum of one shim.

NOTE #4: All machines need to bore Steering Knuckles to use items 62 & 63. See diagram on previous page. Unless you have purchased new Steering Knuckles part number, 9112-0003 & 9112-0004.

NOTE #5: You may have to use item 37 in place of items 28 & 64 unless you have purchased new Steering Knuckles part number, 9112-0003 & 9112-0004. See engineering print that comes with the Steering Knuckle Kit for details.

NOTE #6: See option section for details on the Rear Axle Rework Kit and the Rear Axle Advantage Kit.

Item	Part No.	Qty.	Description Of Part
	9103-5240	Ref	STEERING KNUCKLE KIT, (includes items 26 thru 28; 32 thru 37; 41 thru 44; 47 thru 52; four of item 54; 56 thru 58, 62, 63, & 64 - one kit does both sides)
	9104-5152	Ref	STEERING CYLINDER PIN KIT, (includes one each of items 25, 26, 27, 29, 30, 31, 49, & 57 - one kit needed for each side)
1	9116-6012	1	REAR AXLE, (includes items 11, 35, & 47)
2	9108-1177	1	REAR AXLE PIN
3	9002-0247	1	HEX HD CAPSCREW, 1-1/4-7X6
4	8856-1119	1	FLAT WASHER, 1-1/4
5	8510-1098	1	HEX NUT, 1-1/4-7
6	2460-1570	2	LIP SEAL
7		2	DRIVE HUB, 534 ONLY, (see page 6-6 for details)
		2	NON DRIVING HUB, 532 ONLY, (See page 6-7 for details)
8	8821-2321	2	SOCKET HEAD CAPSCREW, 5/8-11X3-3/4, GR8
9	8850-1110	2	HEX NUT, 5/8-11
10	9104-3222	4	12 PT. SCREW, 3/4-10X2, (torque to 270-290 ft. lbs.)
11	9112-3031	2	BUSHING
12	8320-1006	12	HEX HD CAPSCREW, 3/4-10X2, (torque to 270-290 ft. lbs.)
13	8668-1572	12	HARDENED WASHER, 3/4
14	9116-6063	1	TIE ROD, (includes item 15)
15	9104-3247	2	SELF ALIGNING BUSHING
16	9112-0003	1	L.H. STEERING KNUCKLE, (see note #4)
17	9112-0004	1	R.H. STEERING KNUCKLE, (see note #4)
18		2	STEERING CYLINDER ASSY, (see page 10-8 for details)
19	8820-1065	2	HEX HD CAPSCREW, 1/2-13X1, GR5
20	9108-1461	2	WASHER, 3/16"
21	9108-1384	2	STEERING CYLINDER PIVOT PIN, (see note # 1)
22	9020-1918	2	SHIM, (10 gauge, see note #2)
23	8822-1701	2	SET SCREW, 3/8-16X1/2"
24	8855-1013	2	LOCKWASHER, 1/2
25	8852-1312	2	HEX LOCKNUT, 3/4-10, (torque to 160-175 ft. lbs.)
26	9108-1415	2	DIRT SHIELD
27	9104-1732	2	SPACER
28	8852-1208	2	HEX LOCKNUT, 1/2-13, (see note #5)
29	9104-1481	2	STEERING CYLINDER PIN
30	9104-1459	2	WASHER
31	8850-1416	2	HEX JAM NUT, 1-14, (torque to 225-250 ft.lbs.)
32	9108-1693	2	UPPER KING PIN
33	9112-3030	2	BACK-UP RING
34	8859-1032	2	O-RING
35	9112-3028	2	BUSHING
36	8692-1268	2	LIP SEAL
37	8821-1117	2	SOCKET HD CAPSCREW, 1/2-13X4-1/2, GR8
	8855-1109	2	LOCKWASHER, 1/2, (see note #5)
38	9104-1439	2	TIE ROD PIN
39	8320-1140	2	HEX HD CAPSCREW, 3/8-16X2-3/4, GR8
40	8852-1306	2	LOCKNUT, 3/8-16
41	9114-1424	2	LOWER KING PIN
42	9104-1449	2	SHIM, (.060 thick, see note #2)
43	9104-1450	2	SHIM, (.0478 thick, see note #2)
44	9104-1451	6	SHIM, (.106 thick, see note #2)
45	9112-3030	2	BACK-UP RING
46	8859-1032	2	O-RING
47	9112-3027	2	BUSHING
48	9112-3029	2	O-RING
49	8859-1104	4	O-RING
50	9112-1091	2	THRUST BUSHING
51	8821-2321	2	SOCKET HD CAPSCREW, 5/8-11X3-3/4, GR8
52	8855-1153	2	LOCKWASHER, 5/8
53	8867-1001	4	LUBE FITTING, STRAIGHT, 1/8
54	8867-1022	6	LUBE FITTING, 30 DEGREES, 1/8
55	8867-1033	4	LUBE FITTING, STRAIGHT, 1/4-28
56	8858-1323	4	RETAINING RING
57	8859-1019	2	O-RING
58	9104-1596	4	SHIM, (20 gauge, see note #2)
59	9103-1009	1	SHIM, (.0500 thick)
60	9108-1691	1	SHIM, (.1046 thick)
61	9020-6846	1	SHIM, (.1345 thick)
62	9112-1239	2	BUSHING, (see note #4)
63	9112-1240	4	BUSHING, (see note #4)
64	8821-1121	2	SOCKET HD CAPSCREW, 1/2-13X6-1/2, (see note #5)

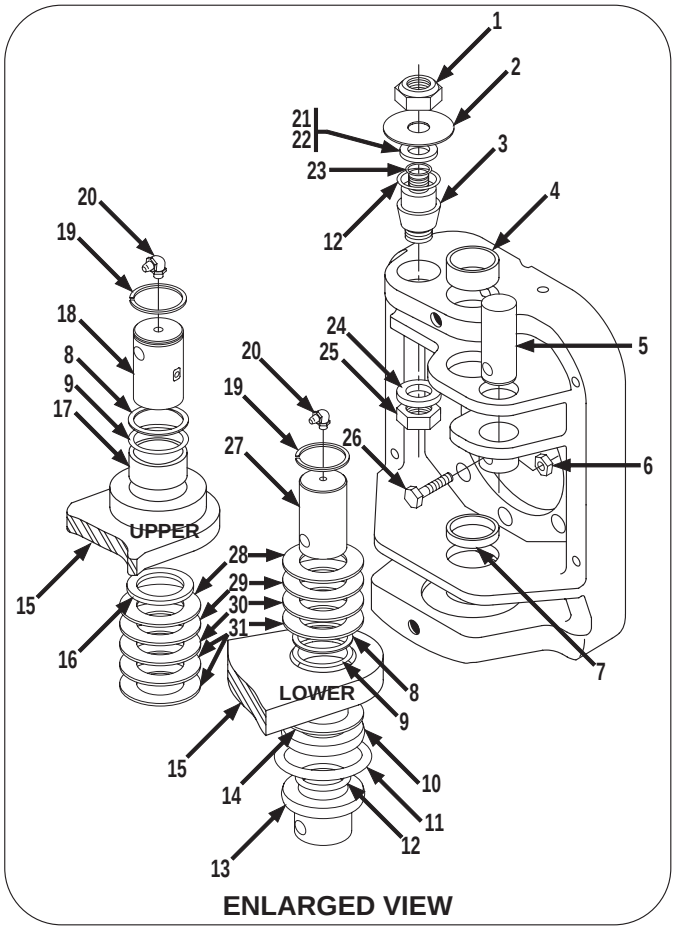

ENLARGED VIEW

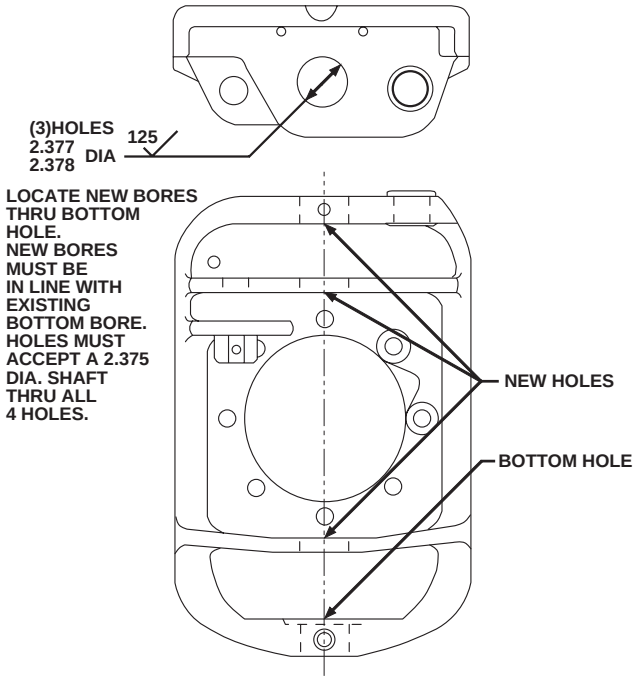

KNUCKLE LAYOUT FOR BORING OUT HOLES FOR BUSHINGS
SEE NOTE #4 ON NEXT PAGE FOR DETAILS
(R.H. KNUCKLE SHOWN)

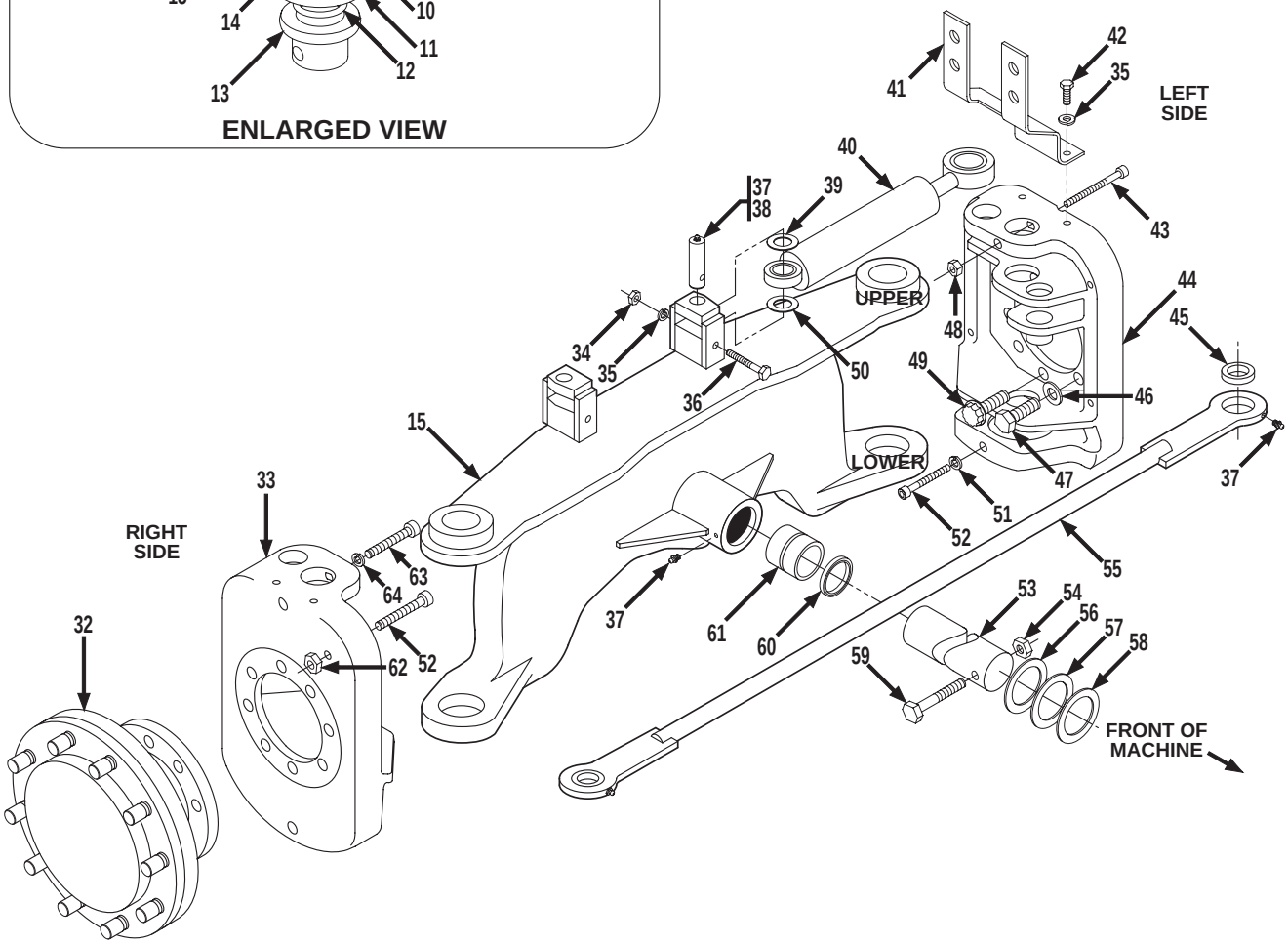

NOTE #1: Cylinder base end must be free to rotate. Shim steer cylinder base end as required to maintain a total max. gap of 1/16".

NOTE #2: Shim bottom knuckles as required to maintain no more than 1/32" movement. Shim top knuckles as required to maintain no more than 1/16" gap. Must have a minimum of one shim.

NOTE #3: All machines need to bore Steering Knuckles to use items 4 & 7. See diagram on previous page. Unless you have purchased new Steering Knuckles part number, 9112-0003 & 9112-0004.

NOTE #4: You may have to use items 63 & 64 in place of items 43 & 48, unless you have purchased new Steering Knuckles part number, 9112-0003 & 9112-0004. See engineering print that comes with the Steering Knuckle Kit for details.

NOTE #5: See option section for details on the Rear Axle Rework Kit and the Rear Axle Advantage Kit.

Item	Part No.	Qty.	Description Of Part
	9103-5240	1	STEERING KNUCKLE KIT, (includes items 2, 4, 7 thru 14, 16 thru 23, 27 thru 31, 43, 48, 51, two of item 52, 63, & 64, one kit does both sides)
	9104-5152	AR	STEERING CYLINDER PIN KIT, (includes one each of items 1, 2, 3, 12, 21 thru 25, one kit needed for each side)
1	8852-1312	2	HEX LOCK NUT, 3/4-10, (torque to 160-175 ft. lbs.)
2	9108-1415	2	DIRT SHIELD
3	9104-1481	2	STEERING CYLINDER PIN
4	9112-1239	2	BUSHING
5	9104-1439	2	TIE ROD PIN
6	8852-1306	2	LOCK NUT, 3/8-16
7	9112-1240	4	BUSHING
8	9112-3030	4	BACK-UP RING
9	8859-1032	4	O-RING
10	9112-3027	2	BUSHING
11	9112-3029	2	O-RING
12	8859-1104	4	O-RING
13	9112-1091	2	THRUST BUSHING
14	9104-1733	AR	SHIM, (.032 thick)
15	9116-6012	1	REAR AXLE WELDMENT, (includes items 10, 17, & 61)
16	8692-1268	2	LIP SEAL
17	9112-3028	2	BUSHING
18	9108-1693	2	UPPER KING PIN
19	8858-1323	4	RETAINING RING
20	8867-1022	4	LUBE FITTING, 90 DEGREES, 1/8
21	9104-1732	2	SPACER
22	9104-1438	AR	SPACER
23	8859-1019	2	O-RING
24	9104-1459	2	WASHER
25	8850-1416	2	HEX JAM NUT, 1-14, (torque to 225-250 ft. lbs.)
26	8320-1140	2	HEX HD CAPSCREW, 3/8-16X2-3/4, GR8
27	9114-1424	2	LOWER KING PIN
28	9104-1449	AR	SHIM, (.060 thick, see note #2)
29	9104-1450	AR	SHIM, (.0478 thick, see note #2)
30	9104-1451	AR	SHIM, (.106 thick, see note #2)
31	9104-1596	AR	SHIM, (.0359 thick, see note #2)
32		Ref	DRIVE HUB, (see page 6-6 for details)
33	9112-0004	1	R.H. STEERING KNUCKLE, (see note #4)
34	8850-1006	2	HEX NUT, 3/8-16
35	8855-1011	6	LOCK WASHER, 3/8
36	8320-1144	2	HEX HD CAPSCREW, 3/8-16X5-3/4, GR8
37	8867-1001	6	LUBE FITTING, STRAIGHT, 1/8
38	9108-1695	2	STEERING CYLINDER PIVOT PIN
39	9140-3066	AR	SHIM, (.060 thick, see note #1)
40		Ref	STEERING CYLINDER ASSY, (see page 10-8 for details)
41	9108-1523	1	L.H. TUBE SUPPORT
	9108-1522	1	R.H. TUBE SUPPORT
42	8820-1035	4	HEX HD CAPSCREW, 3/8-16X1, GR5
43	8821-1121	2	SOCKET HD CAPSCREW, 1/2-13X6-1/2, GR8, (see note #5)
44	9112-0003	1	L.H. STEERING KNUCKLE, (see note #4)
45	9104-3247	2	SELF-ALIGNING BUSHING
46	8668-1572	12	HARDENED WASHER, 3/4
47	8320-1006	12	HEX HD CAPSCREW, 3/4-10X2, GR8, (torque to 270-290 ft. lbs.)
48	8852-1208	2	HEX LOCKNUT, 1/2-13, (see note #5)
49	9104-3222	4	CAPSCREW 12PT, 3/410X2, GR8 (torque to 270-290 ft. lbs.)
50	9140-3065	AR	SHIM, (10 gauge, see note #1)
51	8855-1153	2	LOCK WASHER, 5/8
52	8821-2321	4	SOCKET HD CAPSCREW, 5/8-11X3-3/4, GR8
53	9108-1177	1	REAR AXLE MOUNTING PIN
54	8510-1098	1	HEX NUT, 1-1/4-7
55	9116-6063	1	TIE ROD, (includes item 45)
56	9116-1066	AR	SHIM, (.0598 thick)
57	9116-1067	AR	SHIM, (.1046 thick)
58	9116-1068	AR	SHIM, (.1345 thick)
59	9002-0247	1	HEX HD CAPSCREW, 1-1/4-7X6, GR5
60	2460-1570	2	LIP SEAL
61	9112-3031	2	BUSHING
62	8850-1110	2	HEX NUT, 5/8-11
63	8821-1117	2	SOCKET HD CAPSCREW, 1/2-13X4-1/2, GR8, (see note #5)
64	8855-1109	2	LOCKWASHER, (hi coller), 1/2, (see note #5)

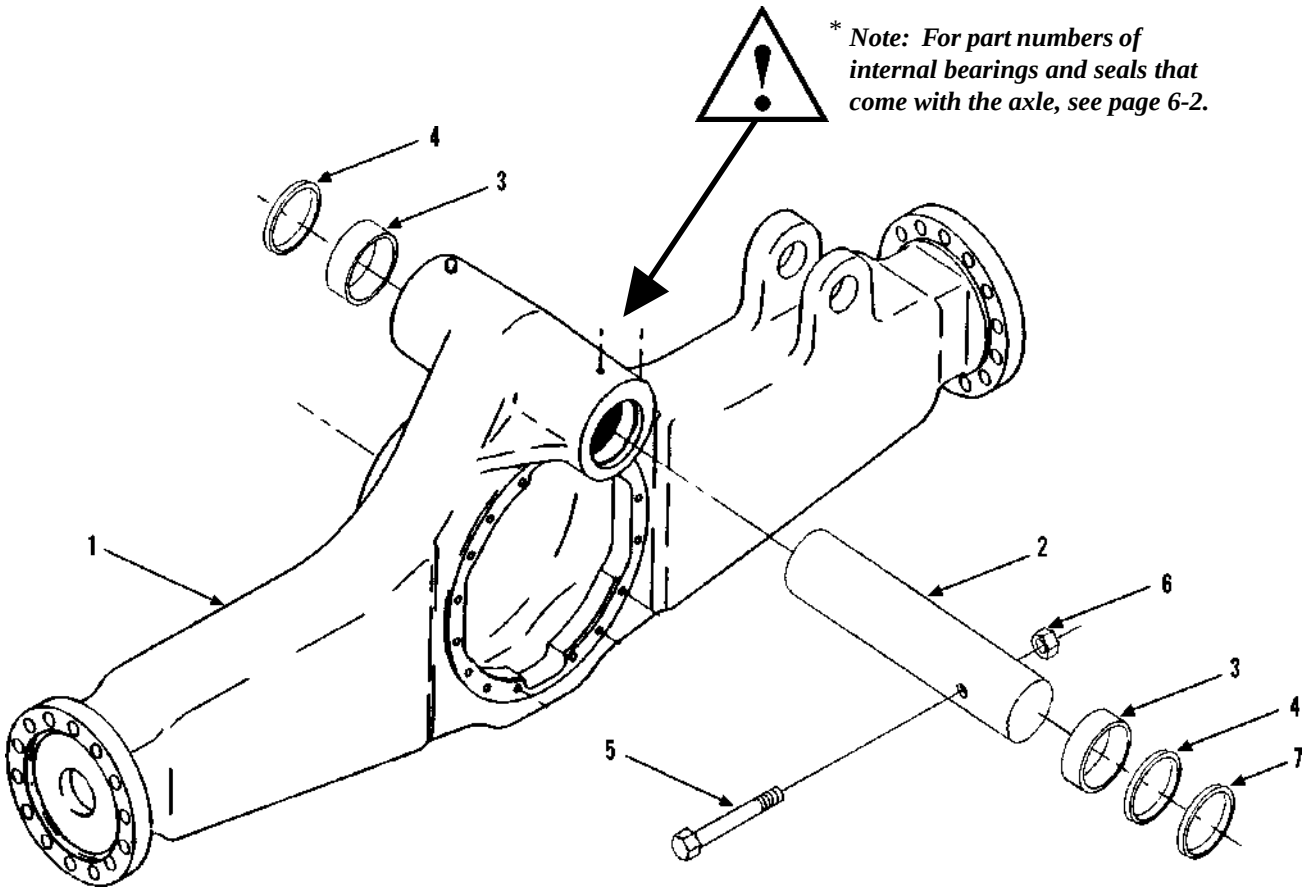

Item	Part No.	Qty.	Description Of Part
1		1	FRONT AXLE HOUSING ASSEMBLY (see page 6-2 for details)
2	9108-1176	1	FRONT SWAY PIN
3	9020-5891	2	SPACER
4	9103-1014	2	SHIM WASHER
5	8320-1031	1	HEX HD CAPSCREW, 1"-8X5"
6	8852-1016	1	HEX LOCKNUT, 1"-8"
7	9108-3480	1	SHIM WASHER

** Added note to see page 6-2 for internal components*

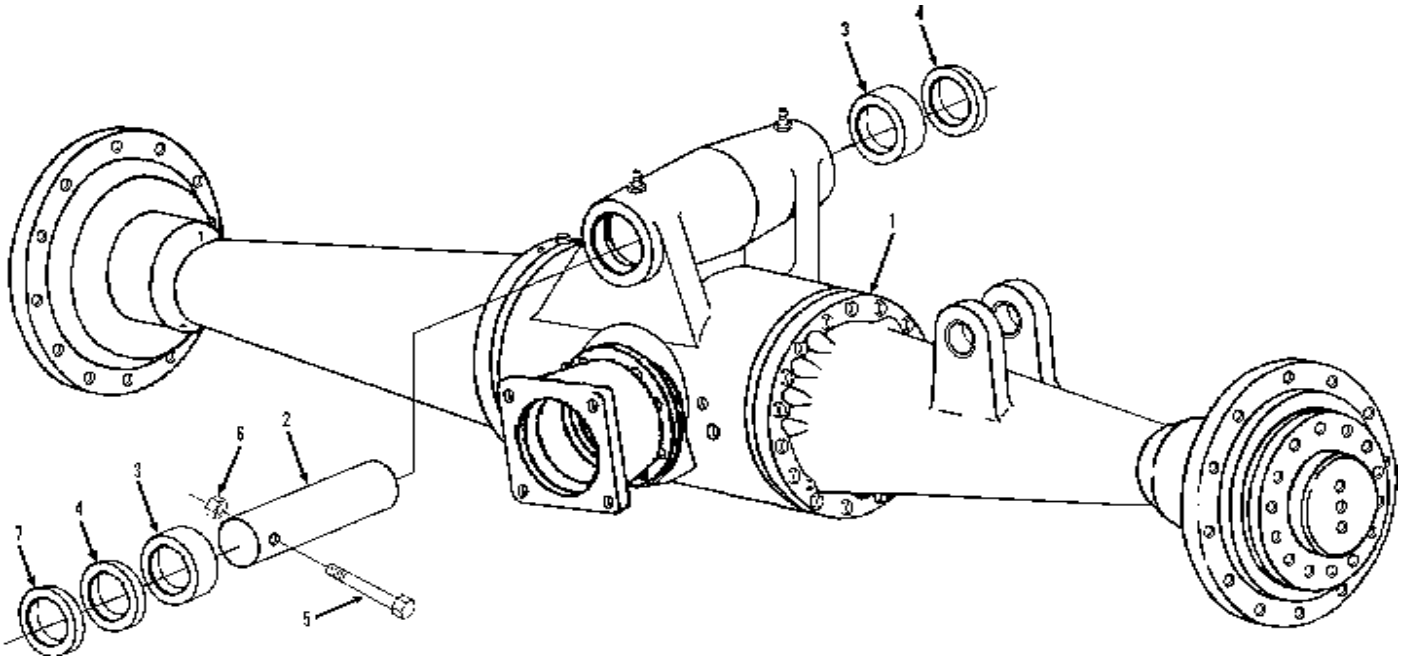

Item	Part No.	Qty.	Description Of Part
1		Ref	FRONT AXLE (see page 6-2 for details)
2	9108-1176	1	FRONT SWAY PIN
3	9020-5891	2	SPACER
4	9103-1014	2	SHIM WASHER
5	8320-1031	1	HEX HD CAPSCREW, 1"-8X5"
6	8852-1016	1	HEX LOCKNUT, 1"-8"
7	9108-3480	1	SHIM WASHER

STANDARD

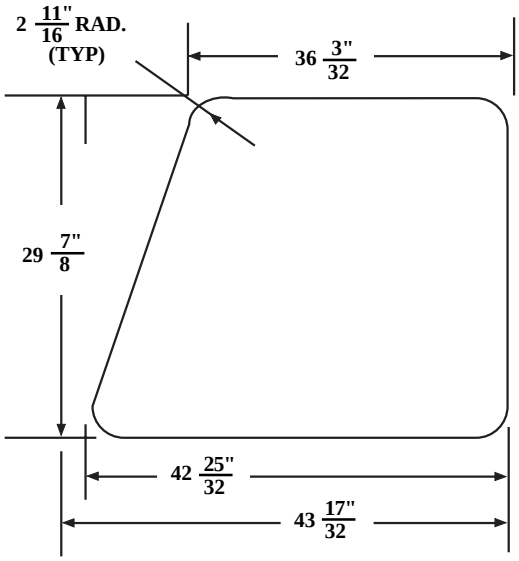

RIGHT SIDE WINDOW

REAR WINDOW

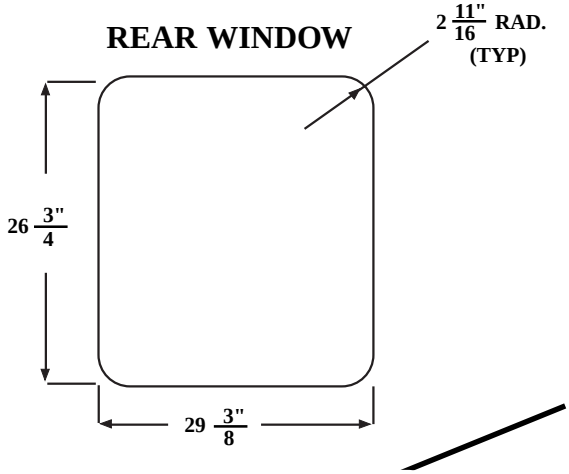

NOTE: ALL LAMINATED SAFETY GLASS, EXCEPT TOP WINDOW. TINTED FOR 73% LIGHT TRANSMISSION SEAMED EDGES, 7/32" THICK.

CAB GLASS CAN ONLY BE SHIPPED WITH THE COMPLETE CAB ENCLOSURE OPTION. IF GLASS BREAKAGE OCCURS IN THE FIELD IT MUST BE REPLACED LOCALLY USING THE DIMENSIONS GIVEN. WITH THE EXCEPTION OF THE DOOR SLIDING WINDOW ASSY WHICH MAY BE PURCHASED THROUGH THE PARTS DEPARTMENT.

OPTIONAL

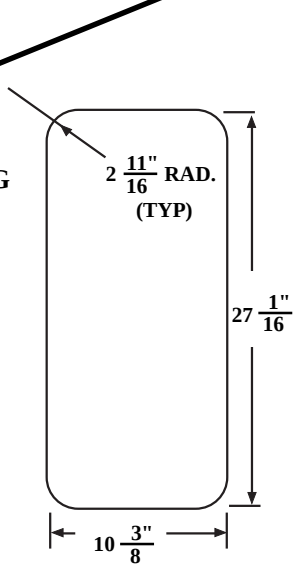

LEFT SIDE WINDOW

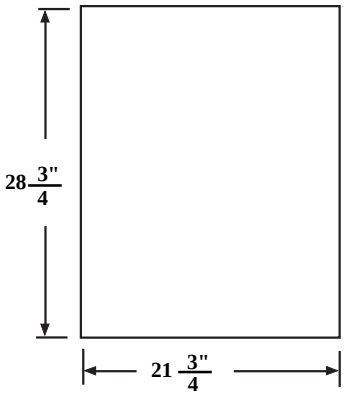

TOP WINDOW
(Clear Lexan, 1/4" thick)

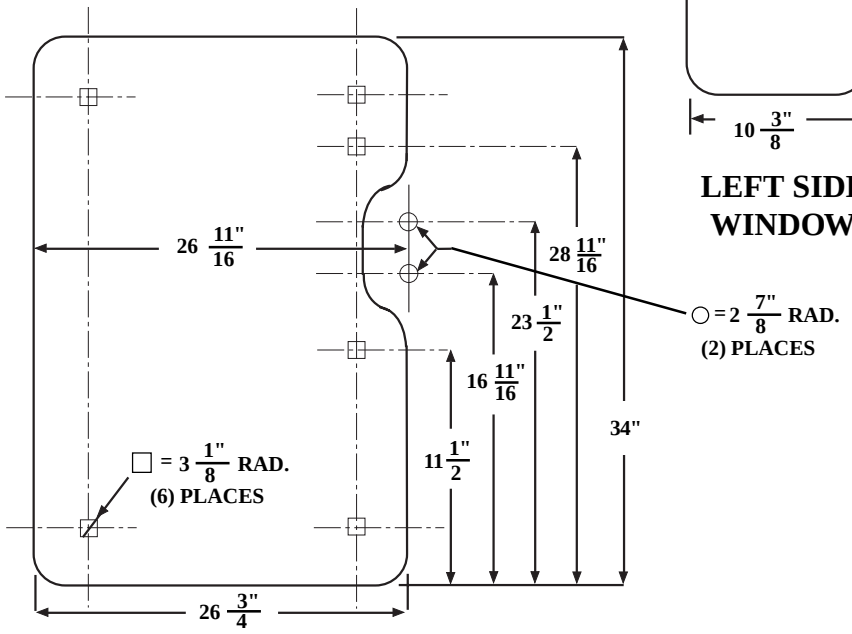

FRONT WINDOW

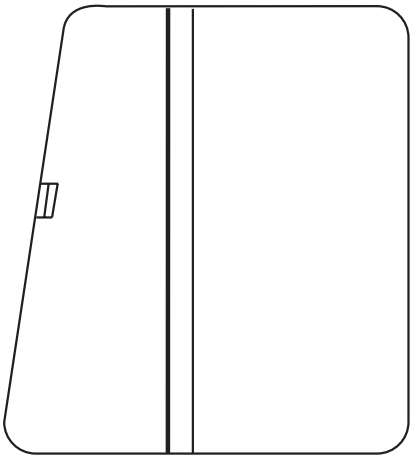

DOOR SLIDING WINDOW
(9130-3067)

** Changed logo in upper left corner to identify machine more clearly.*

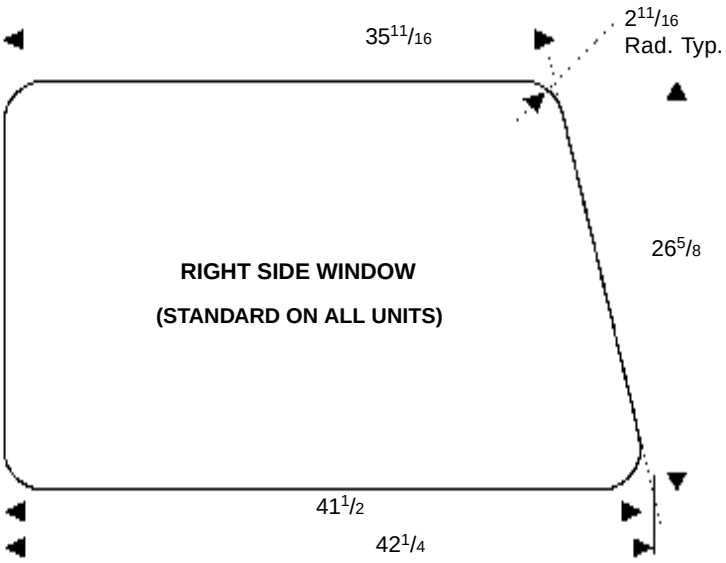

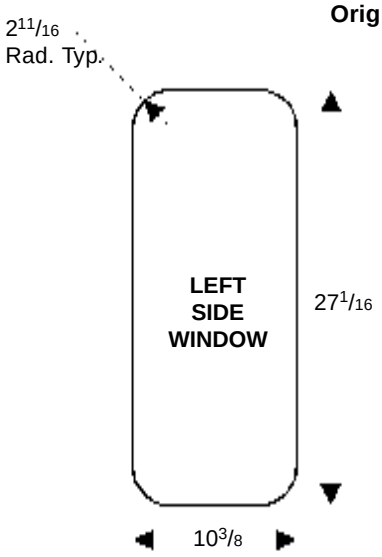

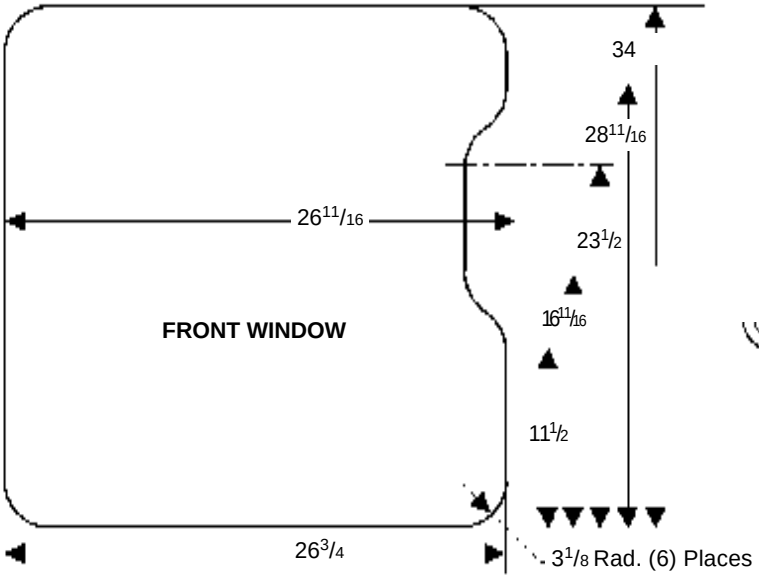

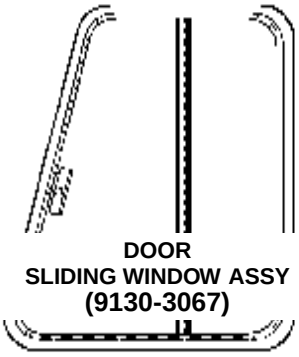

NOTE 1: CAB GLASS CAN ONLY BE SHIPPED WITH THE COMPLETE CAB ENCLOSURE OPTION. IF GLASS BREAKAGE OCCURS IN THE FIELD, IT MUST BE REPLACED LOCALLY USING THE DIMENSIONS GIVEN. WITH THE EXCEPTION OF THE SLIDING DOOR WINDOW ASSY WHICH MAY BE PURCHASED THROUGH THE PARTS DEPARTMENT.

NOTE 2: ALL LAMINATED SAFETY GLASS (EXCEPT FOR TOP WINDOW). TINTED FOR 73% LIGHT TRANSMISSION. SEAMED EDGES. 7/32 THICK.

NOTE 3: TOP WINDOW IS LEXAN MR50T4-112. 1/4 THICK.

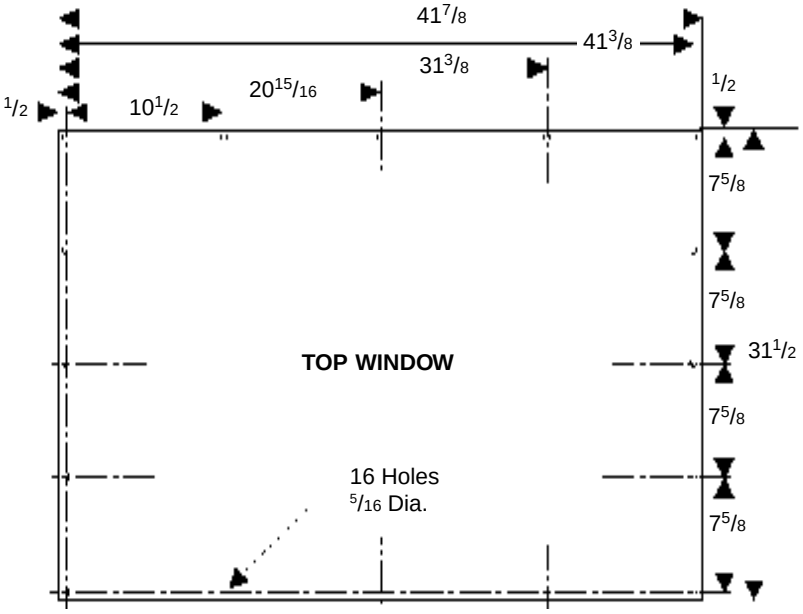

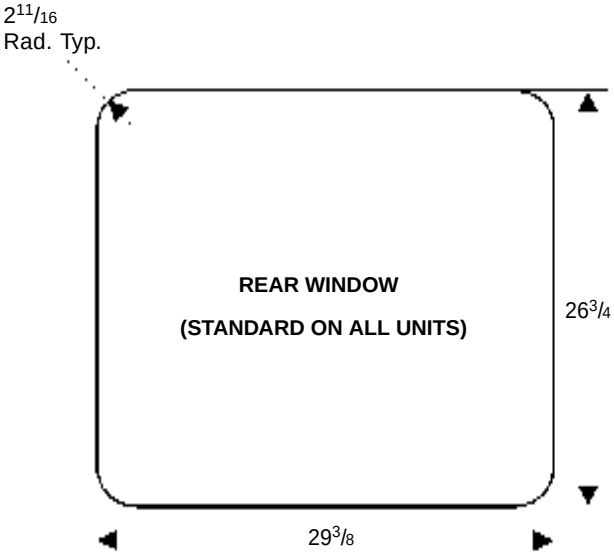

BOOM
First Boom Section
Starting Serial No.0188002
Original Issue 1-90
Revised 9-12-95

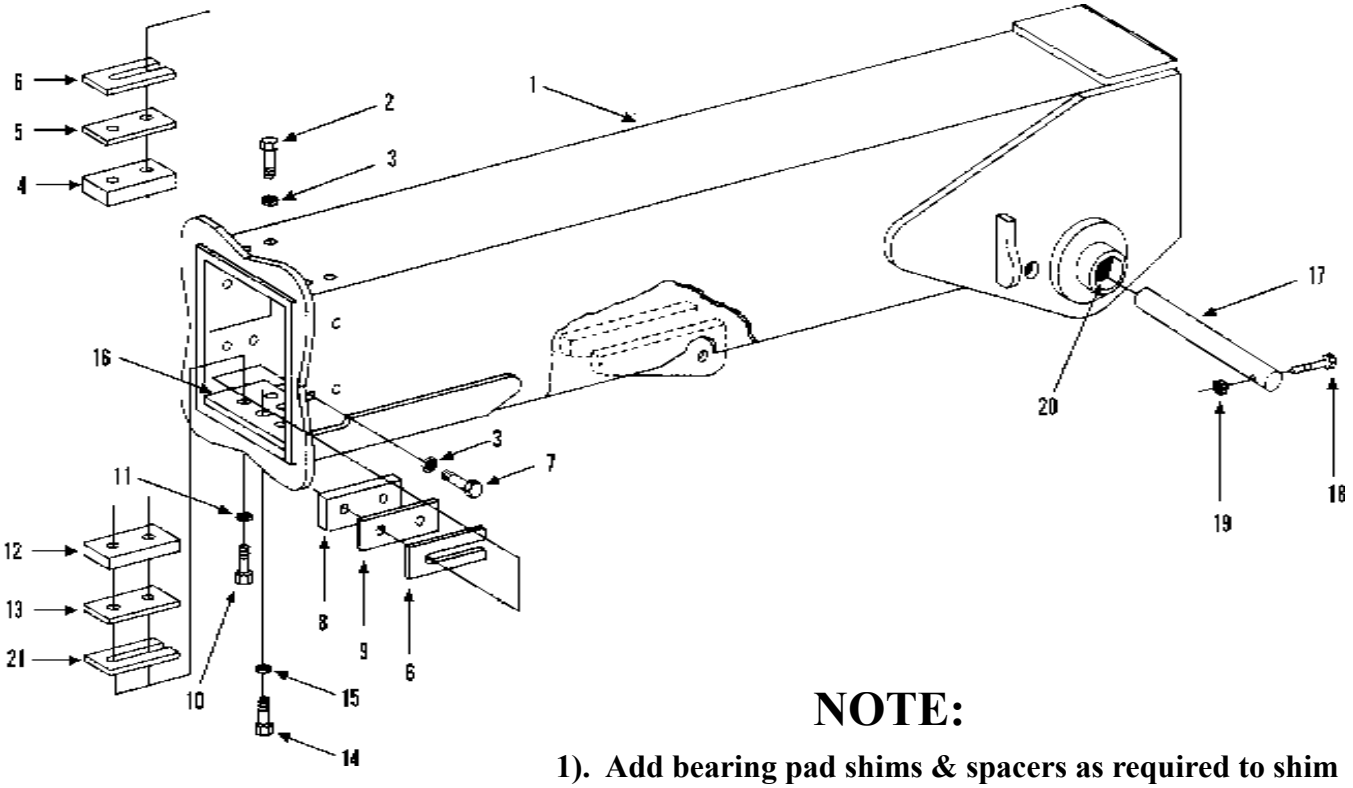

NOTE:

1). Add bearing pad shims & spacers as required to shim boom to within 1/16" of a tight fit. Amounts of shims can vary at each shim point. When a shim is used with a pad, a spacer must be inserted between pad & shim. No pads shall sit directly on slotted surface of shims.

2). The length of pad bolts depend on the amount of shims used. Bolt cannot extend past chamfer on bearing.

Item	Part No.	Qty.	Description Of Part
1	9112-6011	1	BOOM, FIRST SECTION
* 2	8820-1535	4	HEX HD CAPSCREW, 3/8-24X1-1/4, GR5 (torque to 32-37 ft.lbs.)
*	8820-1536	AR	HEX HD CAPSCREW, 3/8-24X1-1/2, GR5 (torque to 32-37 ft.lbs.)
3	8856-1109	8	FLAT WASHER, 3/8
* 4	9103-3185	2	BEARING PAD
5	9103-1236	2	SPACER
6	9020-5870	AR	SHIM
* 7	8820-1532	8	HEX HD CAPSCREW, 3/8-24X3/4, GR5 (torque to 32-37 ft.lbs.)
*	8820-1534	AR	HEX HD CAPSCREW, 3/8-24X1, GR5 (torque to 32-37 ft.lbs.)
* 8	9103-3186	4	BEARING PAD
9	9103-1236	4	SPACER

Item	Part No.	Qty.	Description Of Part
* 10	8820-1568	4	HEX HD CAPSCREW, 1/2-20X2, GR5 (torque to 68-78 ft.lbs.)
*	8820-1564	AR	HEX HD CAPSCREW, 1/2-20X1, GR5 (torque to 68-78 ft.lbs.)
11	9002-7471	4	HARDENED FLATWASHER, 1/2
12	9108-3063	2	BEARING PAD
13	9108-1172	2	SPACER
14	8820-1608	2	HEX HD CAPSCREW 3/4-16X1-1/2, GR5
15	9002-7473	2	HARDENED WASHER, 3/4
16	9112-1022	1	BEARING PLATE
17	9108-1148	1	BOOM BASE PIN
18	8820-1107	1	HEX HD CAPSCREW, 5/8-11X5, GR5
19	8850-1010	1	HEX NUT, 5/8-11
20	9108-3298	2	BUSHING
* 21	9108-1171	2	SHIM

** Changed logo in upper left, added torque notes to items 2, 7 & 10, changed part numbers on items 4 & 8, and added item 21. Added note.*

BOOM
Second Boom Section
Starting Serial No. 0188002
Original Issue 1-90
Revised 9-12-95

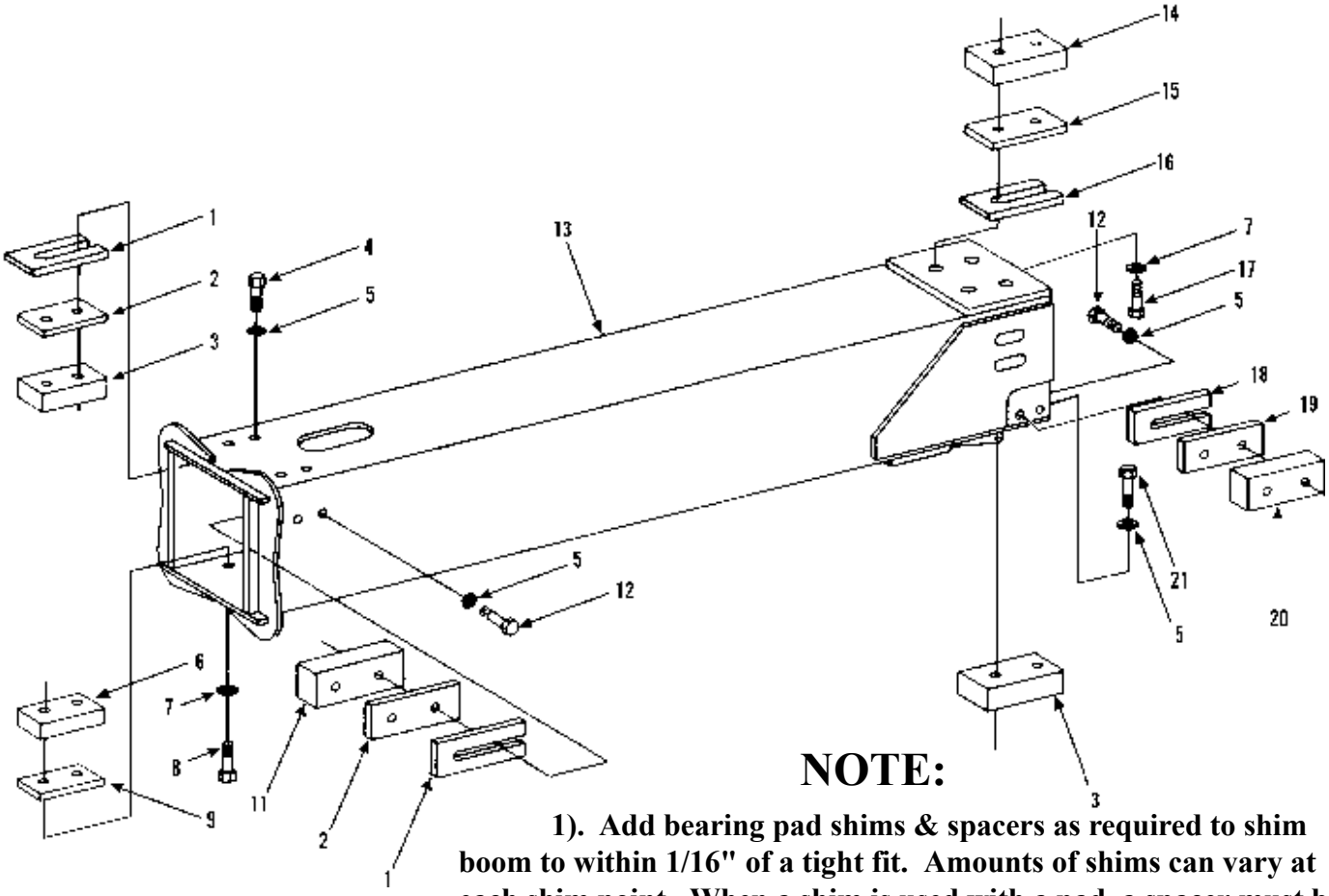

NOTE:

1). Add bearing pad shims & spacers as required to shim boom to within 1/16" of a tight fit. Amounts of shims can vary at each shim point. When a shim is used with a pad, a spacer must be inserted between pad & shim. No pads shall sit directly on slotted surface of shims.

2). The length of pad bolts depend on the amount of shims used. Bolt cannot extend past chamfer on bearing.

Item	Part No.	Qty.	Description Of Part
1	9112-1082	8	SHIM (.06 thick)
2	9112-1083	4	SPACER (.06 thick)
3	9112-3019	4	BEARING PAD
4	8820-1534	4	HEX HD CAPSCREW, 3/8-24X1, GR5 (torque to 32-37 ft. lbs.)
	8820-1535	AR	HEX HD CAPSCREW, 3/8-24X1-1/4 GR5 (torque to 32-37 ft. lbs.)
5	8856-1109	16	FLAT WASHER, 3/8
6	9108-3063	2	BEARING PAD
* 7	9002-7471	6	HARDENED WASHER, 1/2
* 8	8820-1562	6	HEX HD CAPSCREW, 1/2-20X3/4, GR5 (torque to 68-78 ft. lbs.)
	8820-1564	AR	HEX HD CAPSCREW, 1/2-20X1, GR5 (torque to 68-78 ft. lbs.)
9	9108-1172	2	SPACER (.132 thick)
11	9112-3021	2	BEARING PAD

Item	Part No.	Qty.	Description Of Part
12	8820-1532	8	HEX HD CAPSCREW, 3/8-24X3/4, GR5 (torque to 32-37 ft. lbs.)
	8820-1534	AR	HEX HD CAPSCREW, 3/8-24X1 GR5 (torque to 32-37 ft. lbs.)
13	9112-6012	1	BOOM, SECOND SECTION
14	9108-3297	2	BEARING PAD
15	9108-1447	2	SPACING (.132 thick)
16	9112-1081	2	SHIM (.06 thick)
17	8820-1565	4	HEX HD CAPSCREW, 1/2-20X1-1/4, GR5, (torque to 68-78 ft. lbs.)
	8820-1566	AR	HEX HD CAPSCREW, 1/2-20X1-1/2, GR5, (torque to 68-78 ft. lbs.)
18	9020-5870	4	SHIM (.06 thick)
19	9103-1236	2	SPACER (.06 thick)
*20	9103-3186	2	BEARING PAD
21	8820-1538	4	HEX HD CAPSCREW, 3/8-24X2, GR5 (torque to 32-37 ft. lbs.)

** Changed logo in upper left, changed part numbers on items 8 & 20, changed qty. on items 7 & 8. Removed item 10. Added note.*

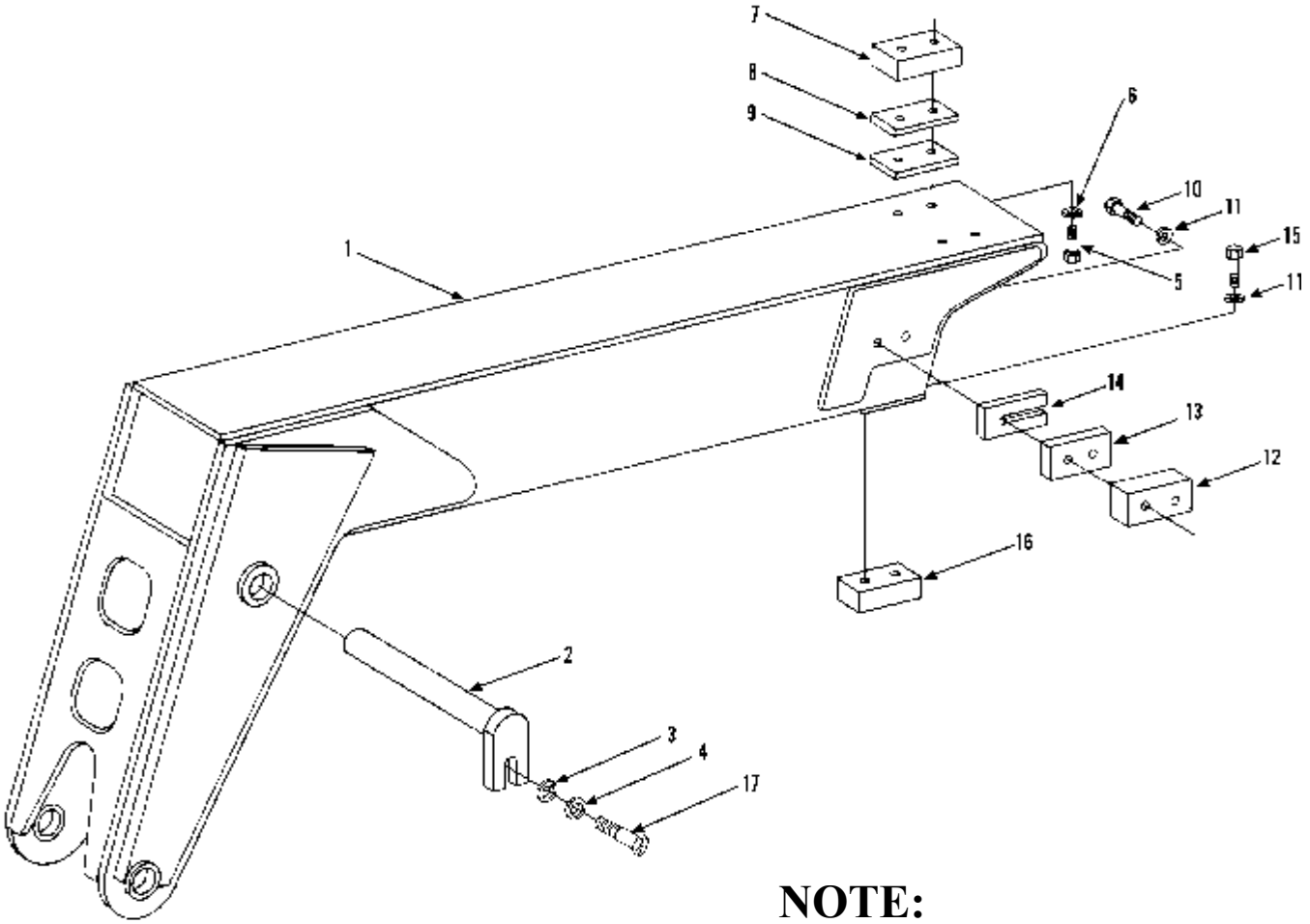

NOTE:

1). Add bearing pad shims & spacers as required to shim boom to within 1/16" of a tight fit. Amounts of shims can vary at each shim point. When a shim is used with a pad, a spacer must be inserted between pad & shim. No pads shall sit directly on slotted surface of shims.

2). The length of pad bolts depend on the amount of shims used. Bolt cannot extend past chamfer on bearing.

Item	Part No.	Qty.	Description Of Part
1	9112-6013	1	BOOM, THIRD SECTION
* 2	9114-6052	1	PIN WELDMENT
* 3	8855-1013	1	LOCKWASHER, 1/2"
* 4	8362-1283	1	WASHER
* 5	8820-1565	4	HEX HD CAPSCREW, 1/2-20X1-1/4, GR5 (torque to 68-78 ft.lbs.)
*	8820-1566	AR	HEX HD CAPSCREW, 1/2-20X1-1/2, GR5 (torque to 68-78 ft.lbs.)
6	9002-7471	4	HARDENED FLATWASHER, 1/2
7	9108-3297	2	BEARING PAD
8	9108-1447	2	SPACER
9	9112-1081	AR	SHIM

Item	Part No.	Qty.	Description Of Part
*10	8820-1532	4	HEX HD CAPSCREW, 3/8-24X3/4, GR5 (torque to 32-37 ft.lbs.)
*	8820-1534	AR	HEX HD CAPSCREW, 3/8-24X1, GR5 (torque to 32-37 ft.lbs.)
11	8856-1109	8	FLATWASHER, 3/8
*12	9103-3186	2	BEARING PAD
13	9103-1236	2	SPACER
14	9020-5870	AR	SHIM
*15	8820-1535	4	HEX HD CAPSCREW, 3/8-24X1-1/4, GR5 (torque to 32-37 ft.lbs.)
*16	9112-3019	2	BEARING PAD
17	8820-1065	1	HEX HD CAPSCREW, 1/2-13X1, GR5

** Changed logo in upper left, added torque notes to items 5, 10 & 15, changed part numbers on items 2, 3, 4 & 12, added item 17 & added note*

BOOM
Extension & Retraction Cables

Starting Serial No. 0188002
Original Issue 1-90
Revised 3-31-97

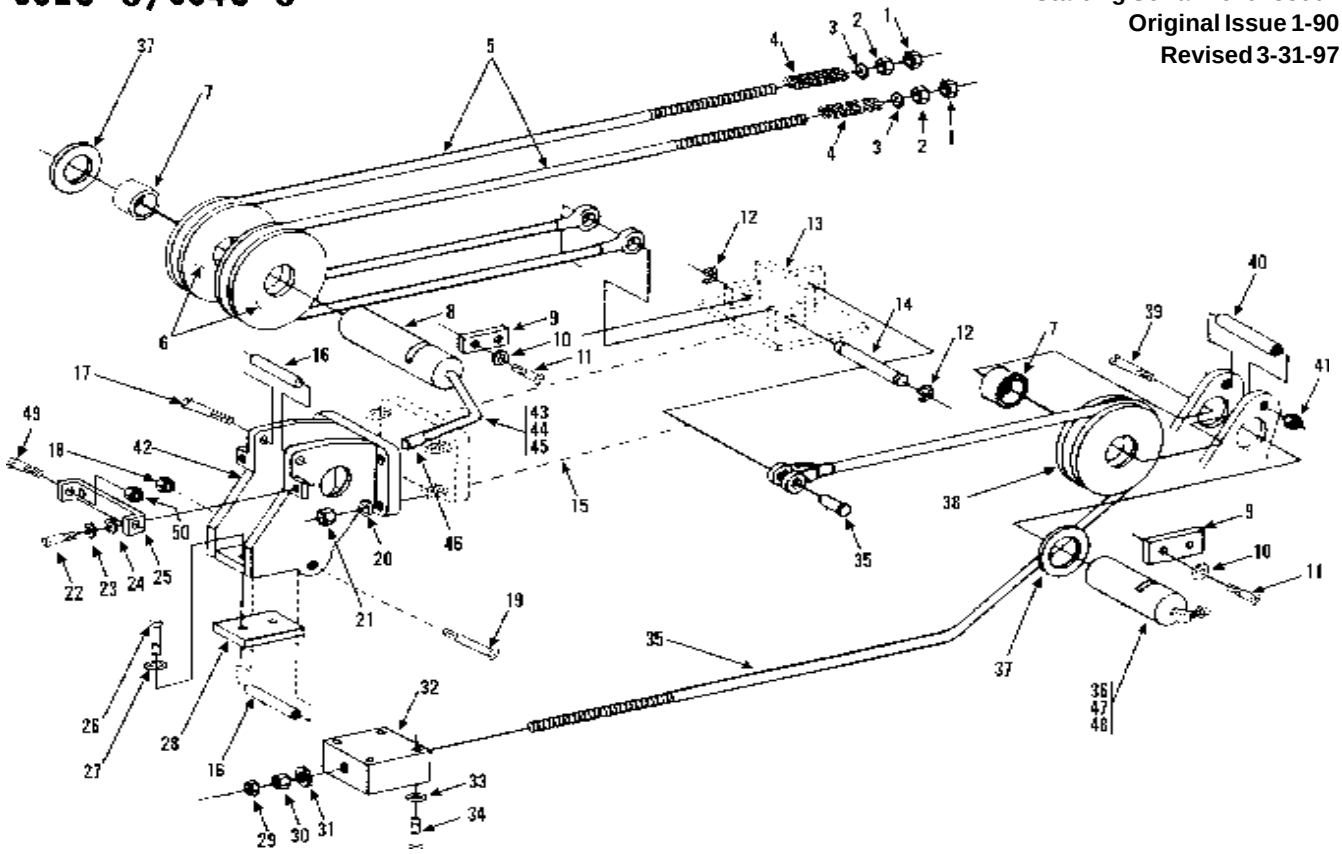

Item	Part No.	Qty.	Description Of Part
	9112-5032	Ref	BUSHING KIT (includes items 7, 8, 36, 43 thru 48, and two of P/N 9112-1200 tapped block)
1	8850-1414	2	HEX JAM NUT, 7/8-14 (torque to 175-215 ft.lbs.)
2	8850-1314	2	HEX NUT, 7/8-14 (torque to 15 ft.lbs.)
3	9112-1079	2	SPECIAL WASHER
4	9112-3018	2	SPRING
5	9112-3012	2	EXTENSION CABLE
6	9112-5030	2	EXTEND SHEAVE ASSY (includes item 7)
7	9112-3102	3	BUSHING
8	9112-1196	1	EXTENSION CABLE PIN
9	8664-1158	2	PIN KEEPER
10	8855-1011	4	LOCKWASHER, 3/8
11	8820-1034	4	HEX HD CAPSCREW, 3/8-16X7/8, GR5
12	8858-1310	2	RETAINING RING, EXTERNAL
13	9112-6015	1	CABLE ANCHOR WELDMENT
14	9112-1080	1	EXTENSION CABLE PIN
15		Ref	CROWD CYLINDER ASSY (see page 10-2 for details)
16	9112-1045	2	RETAINER ROLLER
17	8820-1046	1	HEX HD CAPSCREW, 3/8-16X3-3/4, GR5
18	8852-1306	1	THIN LOCKNUT, 3/8-16
19	8320-1073	1	HEX HD CAPSCREW, 3/8-16X4-1/2, GR5
20	8856-1111	4	WASHER, 1/2"
21	8852-1208	4	HEX LOCKNUT, 1/2"-13
22	8820-1034	2	HEX HD CAPSCREW, 3/8-16X7/8, GR5
23	8855-1011	2	LOCKWASHER, 3/8
24	8855-1109	2	FLAT WASHER, 3/8
25	9112-1122	1	GUIDE BAR

Item	Part No.	Qty.	Description Of Part
26	8820-1532	2	HEX HD CAPSCREW, 3/8-24X3/4, GR5 (torque to 32-37 ft.lbs.)
27	8856-1109	2	FLAT WASHER, 3/8
28	9103-3187	1	BEARING PAD
29	8850-1112	1	HEAVY HEX JAM NUT, 3/4-10
30	8850-1012	1	HEX NUT, 3/4-10
31	9002-7473	1	HARDENED WASHER
32	9108-1087	1	CABLE ADJUSTMENT BLOCK
33	9002-7471	4	WASHER
34	8320-1026	4	HEX HD CAPSCREW, 1/2-13X1-1/8, GR8
35	9112-3013	1	RETRACTION CABLE (includes pin)
36	9112-1197	1	RETRACTION SHEAVE PIN
37	9104-1451	5	THRUST WASHER
38	9112-5031	1	RETRACTION SHEAVE ASSY (includes item 7)
39	8820-1043	2	HEX HD CAPSCREW, 3/8-16X3,GR5
40	9112-1056	2	RETAINER ROLLER
41	8852-1306	2	HEX LOCKNUT, 3/8-18 (nylok)
42	9112-6009	1	EXTEND CABLE BRACKET
43	8688-1276	2	TUBE FITTING, 90 DEGREES
44	8688-1273	2	STRAIGHT TUBE FITTING
45		20"	NYLON TUBING, 1/4"
46	8867-1002	2	LUBE FITTING, STRAIGHT, 1/8
47	9103-3445	1	LUBE FITTING, STRAIGHT, 1/8
48	8871-2011	1	STREET ELBOW, 90 DEGREES, 1/8
* 49	9112-3136	2	BRASS HEX HD CAPSCREW, 3/8-16X1
* 50	8850-1006	2	HEX NUT, 3/8-16
			NOTE: ONLY ITEMS WITH PART NUMBERS ARE AVAILABLE FOR SERVICE

** Added items 49 & 50.*

BOOM
(9108-5049) Quick Switch Option
Starting Serial No. 0188002 thru 0288482
Original Issue 1-90
Revised 2-4-98

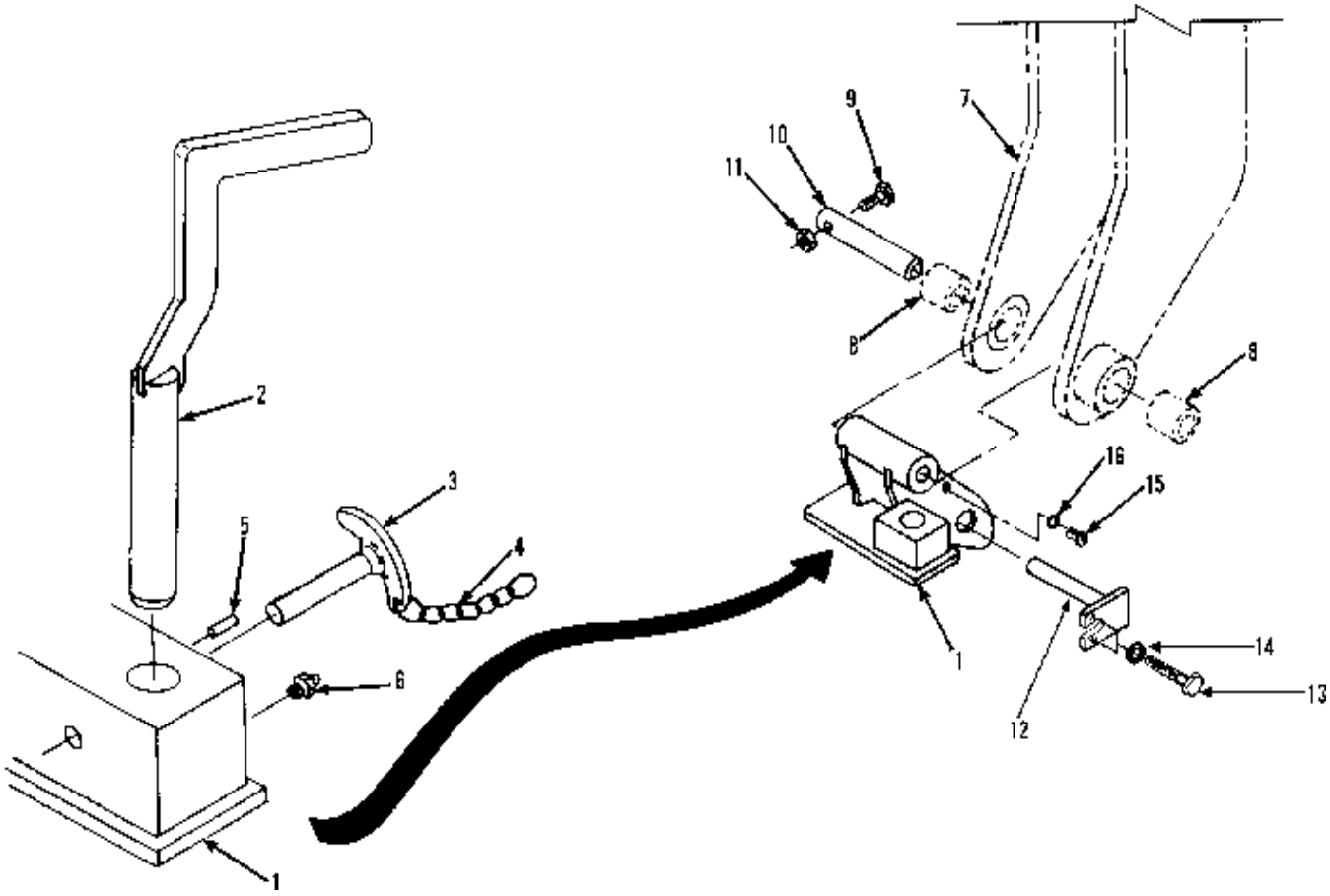

Item	Part No.	Qty.	Description Of Part
	9108-5049	Ref	QUICK SWITCH OPTION (includes 9104-5095 plus items 9,10, &11)
	9104-5095	1	QUICK SWITCH ASSY (includes items 1 thru 6, 15 & 16)
1	9104-6074	1	QUICK SWITCH WELDMENT
2	9108-6073	1	PLUNGER WELDMENT
3	9020-7902	1	QUICK RELEASE PIN
4	9103-3038	1	JACK CHAIN, 8" LONG, SIZE 12
5	8863-1509	1	ROLL PIN, 1/4"X2
6	8867-1008	1	LUBE FITTING, STRAIGHT, 1/4-28
* 7		Ref	THIRD BOOM SECTION (see page 3-3)
* 8	9103-1136	2	BUSHING
9	8820-1107	1	HEX HD CAPSCREW, 5/8-11X5, GR5
10	9108-1324	1	PIN
11	8850-1010	1	HEX NUT, 5/8-11
12	9020-7046	1	TILT CYLINDER PIN
13	8820-1065	2	HEX HD CAPSCREW, 1/2-13X1, GR5
14	8855-1013	2	LOCKWASHER, 1/2
15	8830-1193	1	ROUND HD MACHINE SCREW, #10-32X1/2
16	8856-1105	1	FLAT WASHER, #10

**Added new page for service, updated parts are not interchangeable. Referenced item 7 and changed the Qty. on item 8.*

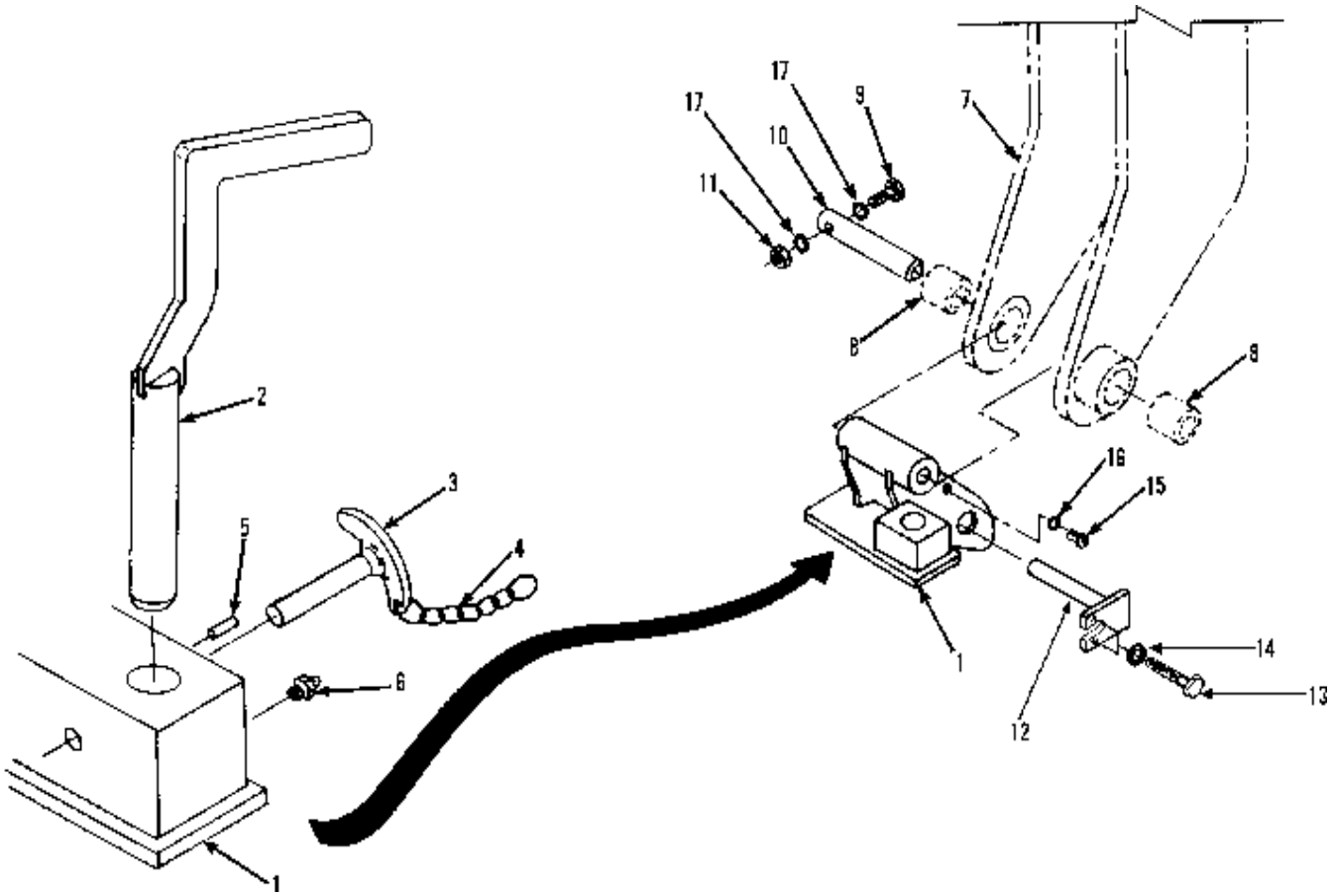

Item	Part No.	Qty.	Description Of Part
	9108-5049	Ref	QUICK SWITCH OPTION (includes 9108-5091 plus items 9,10, &11)
	9108-5091	1	QUICK SWITCH ASSY (includes items 1 thru 6, 15 & 16)
1	9108-6152	1	QUICK SWITCH WELDMENT
2	9108-6151	1	PLUNGER WELDMENT
3	9020-7902	1	QUICK RELEASE PIN
4	9103-3038	1	JACK CHAIN, 5" LONG, SIZE 12
5	8863-1509	1	ROLL PIN, 1/4"X2
6	8867-1008	1	LUBE FITTING, STRAIGHT, 1/4-28
7		Ref	THIRD BOOM SECTION (see page 3-3)
8	9103-1136	2	BUSHING
9	9112-1308	1	HEX HD CAPSCREW, 5/8-11X5, GR5
10	9104-1365	1	PIN
11	9112-1309	1	HEX NUT, 5/8-11 (torque to 185-200 ft. lbs.)
12	9116-6062	1	TILT CYLINDER PIN
13	8320-1123	2	HEX HD CAPSCREW, 1/2-13X1, GR8
14	8856-1111	2	WASHER, 1/2
15	8830-1193	1	ROUND HD MACHINE SCREW, #10-32X1/2
16	8856-1105	1	FLAT WASHER, #10
17	9112-1310	2	WASHER, 5/8

ATTACHMENTS
(9108-5033) Carriage Assembly
Starting Serial No. 0188002
Original Issue 1-90
Revised 11-29-00

NOTE: MANY DIFFERENT FORK ASSEMBLIES ARE AVAILABLE FOR THE CARRIAGE ASSEMBLIES USED ON 532C-6/534C-6. PLEASE SEE FORK INFORMATION PAGE, (4-7) FOR LIST OF FORKS.

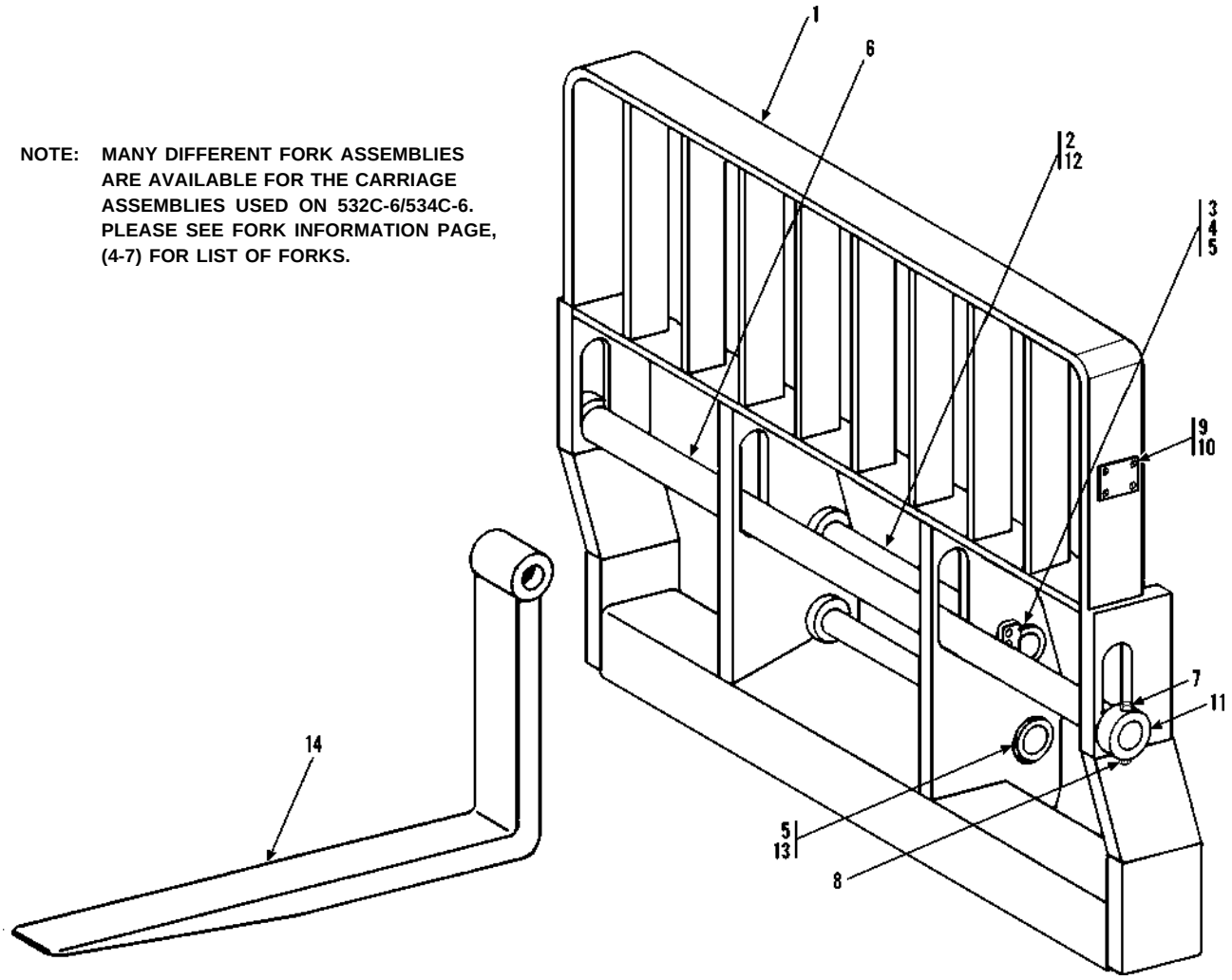

Item	Part No.	Qty.	Description Of Part Item
*	9108-5033	Ref	48" CARRIAGE ASSY, (includes items 1 thru 13)
* 1	9108-6116	1	48" CARRIAGE WELDMENT
2	9108-1369	1	HEAD PIN
3	9108-1368	1	RETAINER BAR
4	8820-1066	2	HEX HD CAPSCREW, 1/2-13X1-1/4, GR5
5	8855-1013	2	LOCKWASHER, 1/2
* 6	9045-1058	1	FORK PIN
* 7	8820-1105	2	HEX HD CAPSCREW, 5/8-11X4, GR5
* 8	8852-1310	2	HEX LOCKNUT, 5/8-11
9	9015-3001	1	SERIAL NUMBER PLATE
10	8834-1022	4	DRIVE SCREW, #10X3/8
11	9020-0003	2	COLLAR
12	9112-1124	1	SLEEVE
13	9020-7046	Ref	TILT PIN
*14	9045-3002	2	FORK
	9060-0390		CUBING FORK

** Revised fork note, illustration, description on 9108-5033, item 1, 7, & 14, Qty on item 7 & 8, & part number on item 6.*

ATTACHMENTS
(9045-5007) & (9045-5008) Q.S. CARRIAGE ASSEMBLIES

Starting Serial No. 0188002
Original Issue 3-90
Revised 11-22-00

OLD STYLE
(USE FOR SERVICE ONLY)

NOTE: MANY DIFFERENT FORK ASSEMBLIES ARE AVAILABLE FOR THE CARRIAGE ASSEMBLIES USED ON 532C-6/534C-6. PLEASE SEE FORK INFORMATION PAGE, (4-7) FOR LIST OF FORKS.

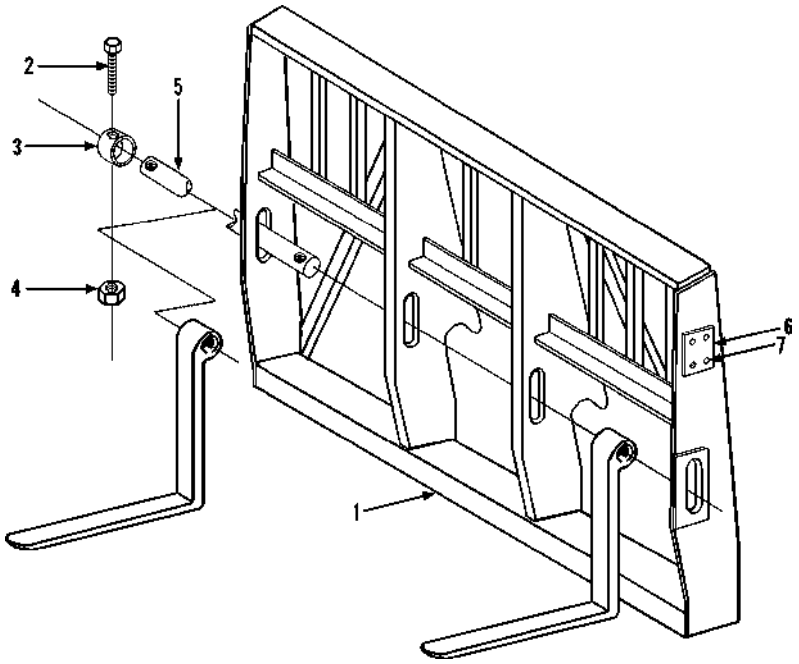

Item	Part No.	Qty.	Description Of Part
	9045-5007	1	48" CARRIAGE ASSY, (Includes all items)
1	9080-1315	1	48" CARRIAGE WELDMENT
2	8820-1105	2	HEX HD CAPSCREW, 5/8-11X4, GR5
3	9020-0003	2	COLLAR
4	8852-1310	2	HEX LOCKNUT, 5/8-11
5	9040-2477	1	FORK PIN
6	9015-3001	1	SERIAL NUMBER PLATE
7	8834-1022	4	DRIVE SCREW, #10X3/8

Item	Part No.	Qty.	Description Of Part
	9045-5008	1	66" CARRIAGE ASSY, (includes all items)
1	9080-1314	1	66" CARRIAGE WELDMENT
2	8820-1105	2	HEX HD CAPSCREW, 5/8-11X4, GR5
3	9020-0003	2	COLLAR
4	8852-1310	2	HEX LOCKNUT, 5/8-11
5	9040-2478	1	FORK PIN
6	9015-3001	1	SERIAL NUMBER PLATE
7	8834-1022	4	DRIVE SCREW, #10X3/8

** Added fork note.*

ATTACHMENTS
(9045-5051) & (9045-5052) Q.S. CARRIAGE ASSEMBLIES

Starting Serial No. 0188002
Original Issue 9-15-95
Revised 11-29-00

NEW STYLE

NOTE: MANY DIFFERENT FORK ASSEMBLIES ARE AVAILABLE FOR THE CARRIAGE ASSEMBLIES USED ON 532C-6/534C-6. PLEASE SEE FORK INFORMATION PAGE, (4-7) FOR LIST OF FORKS.

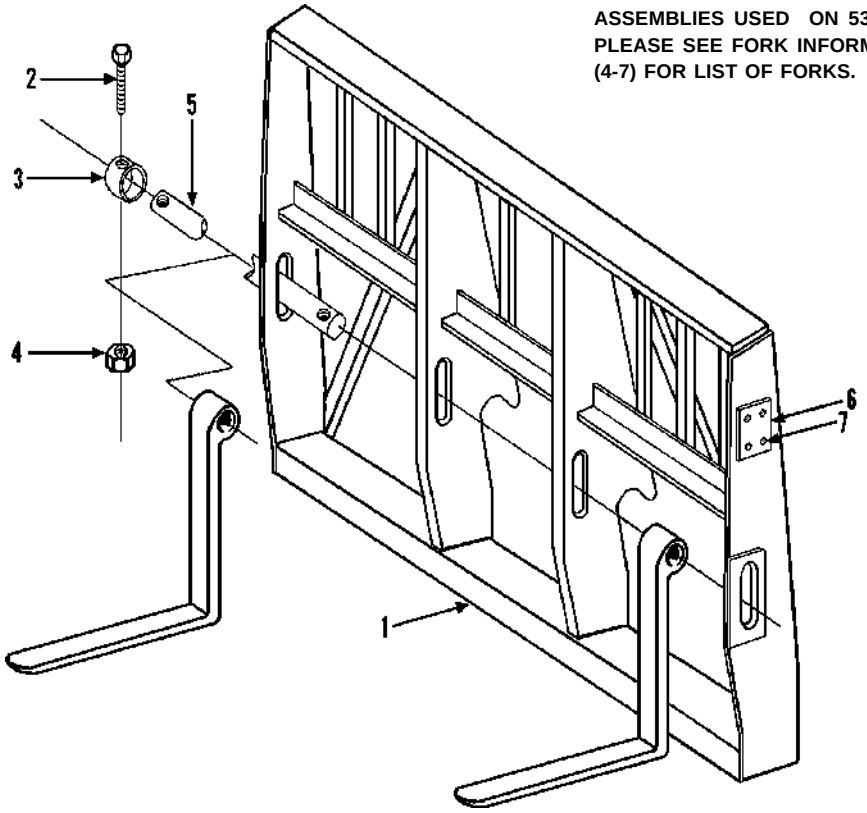

Item	Part No.	Qty.	Description Of Part
	9045-5051	1	48" CARRIAGE ASSY, (Includes all items)
1	9045-6009	1	48" CARRIAGE WELDMENT
2	8820-1105	2	HEX HD CAPSCREW, 5/8-11X4, GR5
3	9020-0003	2	COLLAR
4	8852-1310	2	HEX LOCKNUT, 5/8-11
* 5	9045-1058	1	FORK PIN
6	9015-3001	1	SERIAL NUMBER PLATE
7	8834-1022	4	DRIVE SCREW, #10X3/8

Item	Part No.	Qty.	Description Of Part
	9045-5052	1	66" CARRIAGE ASSY, (includes all items)
1	9045-6010	1	66" CARRIAGE WELDMENT
2	8820-1105	2	HEX HD CAPSCREW, 5/8-11X4, GR5
3	9020-0003	2	COLLAR
4	8852-1310	2	HEX LOCKNUT, 5/8-11
5	9040-2478	1	FORK PIN
6	9015-3001	1	SERIAL NUMBER PLATE
7	8834-1022	4	DRIVE SCREW, #10X3/8

** Added fork note; revised part number on item 5 of 9045-5051.*

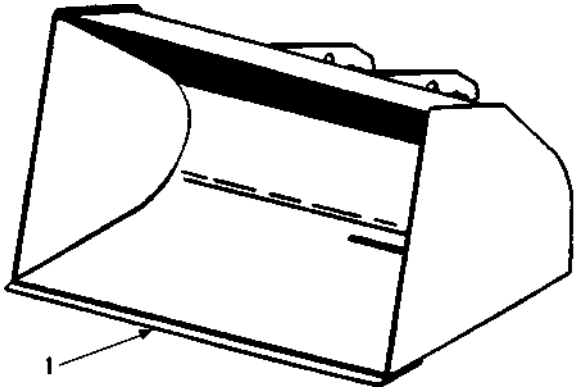

Item	Part No.	Qty.	Description Of Part
1	9045-5049	1	60" BUCKET (3/4 yard capacity)

Item	Part No.	Qty.	Description Of Part
1	9055-5020	1	74" BUCKET (1-1/4 yard capacity)

* *Changed upper left corner to designate model more clearly.*

ATTACHMENTS
(9130-5016) 66" Slope Piler Carriage
Starting Serial No. 0188002
Original Issue 9-15-95
Revised 6-16-06

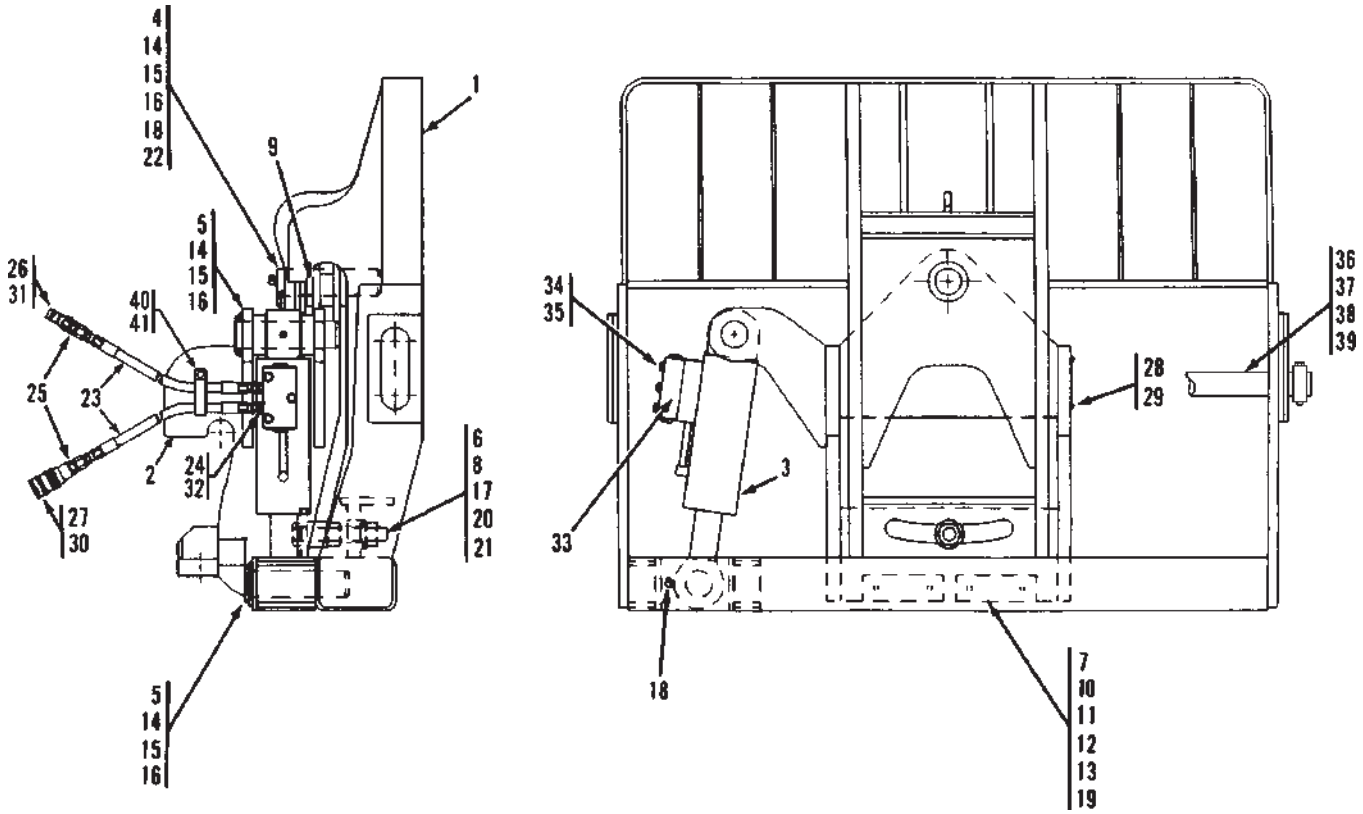

Item	Part No.	Qty.	Description Of Part
	9130-5016	Ref	66" SLOPE PILER CARRIAGE, (includes all items)
	9112-3077	1	CAPACITY DECAL, (not shown)
1	9130-6030	1	CARRIAGE WELDMENT
2	9108-6122	1	ADAPTER WELDMENT
3		Ref	SWAY CYLINDER, (see page 13-10 for details)
* 4	9108-3248	1	BUSHING
5	3423263	2	PIN
6	9020-4007	1	TUBE
7	9103-3186	2	BEARING PAD
8	9108-1577	1	TAP BOLT
* 9	9108-1594	1	THRUST WASHER
10	9020-5870	AR	SHIM
*11	9103-1236	2	SPACER
12	8820-1535	4	HEX HD CAPSCREW, 3/8-24X1-1/4, GR5
* 13	8820-1534	4	HEX HD CAPSCREW, 3/8-24X1, GR5
14	9108-1313	3	KEEPER PLATE
15	8820-1065	6	HEX HD CAPSCREW, 1/2-13X1, GR5
16	8855-1013	6	LOCKWASHER, 1/2
*17	8852-1016	1	HEX LOCKNUT, 1-8
18	8867-1022	2	LUBE FITTING, 90 DEGREES, 1/8
19	8856-1109	4	FLAT WASHER, 3/8
20	8850-1016	1	HEX NUT, 1-8
21	0510-1441	1	WASHER, 1-1/16
22	9108-1622	1	PIN
23	8471-6434	2	HOSE ASSY
24	8366-1316	2	CONNECTOR

Item	Part No.	Qty.	Description Of Part
*25	8866-1010		CONNECTOR, **(Before S/N 2005283-01)**
	8866-2018	2	CONNECTOR, **(S/N 2005283-01 & After)**
*26	9116-3138	1	MALE QUICK DISCONNECT, **(Before S/N 2005283-01)**
	9140-3414	1	MALE QUICK DISCONNECT, **(S/N 2005283-01 & After)**
*27	9116-3139	1	FEMALE QUICK DISCONNECT, **(Before S/N 2005283-01)**
	9140-3413	1	FEMALE QUICK DISCONNECT, **(S/N 2005283-01 & After)**
28	8834-1022	4	DRIVE SCREW, #10X3/8
29	9015-3001	1	SERIAL NUMBER PLATE
30	9104-3125	1	DUST PLUG
31	9104-3126	1	DUST CAP
32	8866-2105	2	ELBOW, 90 DEGREES, (swivel nut)
33		Ref	DUAL P.O. CHECK VALVE, (see page 13-11 for details)
34	8820-1040	3	HEX HD CAPSCREW, 3/8-16X2-1/4, GR5
35	8855-1011	3	LOCKWASHER, 3/8
36	9130-1083	1	FORK PIN
37	9020-0003	2	COLLAR
38	8820-1105	2	HEX HD CAPSCREW, 5/8-11X4, GR5
39	8852-1310	2	LOCKNUT, 5/8-11
*40	8452-1062	1	SUPPORT CLAMP
*41	7714-3015	1	WHIZ LOCKNUT

** Revised illustration & parts list.*

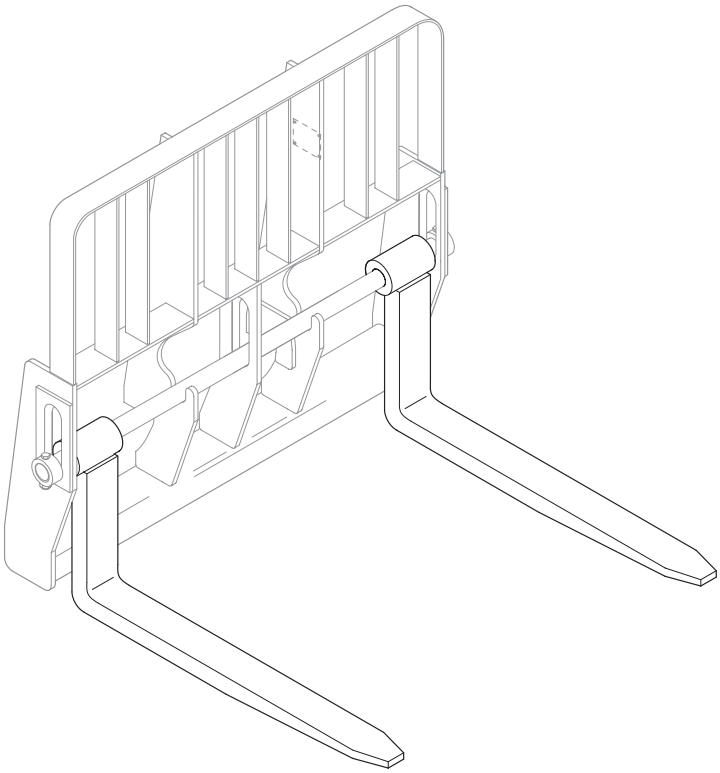

NOTE: FORKS RATED LESS THAN THE ATTACHMENT OR MACHINE'S CAPACITY DECREASE CAPACITY OF THE ATTACHMENT OR MACHINE TO THAT OF THE FORKS. FORKS RATED MORE THAN THE ATTACHMENT OR MACHINE'S CAPACITY DO NOT INCREASE ATTACHMENT OR MACHINE'S CAPACITY.

NOTE: PLEASE CONSULT THE GRADALL PARTS DEPARTMENT TO DETERMINE THE CORRECT FORKS APPLICABLE TO YOUR SPECIFIC CARRIAGE ASSEMBLY AND APPLICATION.

Item	Part No.	Qty.	Description Of Part
	9060-0390	2	48" CUBING FORK, 2X2, 3000 lbs., (B, C & D series)
	9060-1819	2	48" PALLET FORK, 1-3/4X6, 9000 lbs., (B, C & D series)
	9045-3002	2	48" PALLET FORK, 2X4, 8000 lbs., (B, C & D series)
	9055-3005	2	48" PALLET FORK, 2X6, 10,000 lbs., (B, C & D series)
	9055-3008	2	48" PALLET FORK, 1-3/4X4, 5000 lbs., (used on 6' swing mast only, P/N 9045-5047)
	9060-1015	2	60" PALLET FORK, 2X6, 10,000 lbs., (B, C & D series)
	9116-3269	2	60" PALLET FORK, 2X6, 11,300 lbs., (B, C & D series)
	9045-3045	2	60" PALLET FORK, 2X6, 11,300 lbs., (used on 6' swing mast only, P/N 9045-5054)

Item	Part No.	Qty.	Description Of Part
	9055-3018	2	72" PALLET FORK, 2X6, 10,000 lbs., (B, C & D series)
	9112-3132	2	72" PALLET FORK, 2X6, 10,000 lbs., (B, C & D series)
	9060-0832	2	48" PALLET FORK, 2-1/4X8, 16,000 lbs., (used on the 542, 552, & 554)
	9060-1873	2	48" PALLET FORK, 2-1/4X7, 15,000 lbs., (used on the 542, 552, & 554)
	9060-0833	2	60" PALLET FORK, 2-1/4X8, 16,000 lbs., (used on the 542, 552 & 554)
	9060-1219	2	60" PALLET FORK, 2-1/2X8, 16,000 lbs., (used on the 542, 552 & 554)
	9060-1874	2	60" PALLET FORK, 2-1/4X7, 15,000 lbs., (used on the 542, 552 & 554)
	H045-3002	2	96" PALLET FORK, 2X6, 7500 lbs. loaded center, (B, C & D series)
	9055-3018	2	72" PALLET FORK, 2X6, 10,000 lbs., (B, C & D series)

ENGINE & ATTACHING PARTS

Engine Left Side View (532C-6)

Starting Serial No. 0188002
Original Issue 1-90
Revised 6-01-05

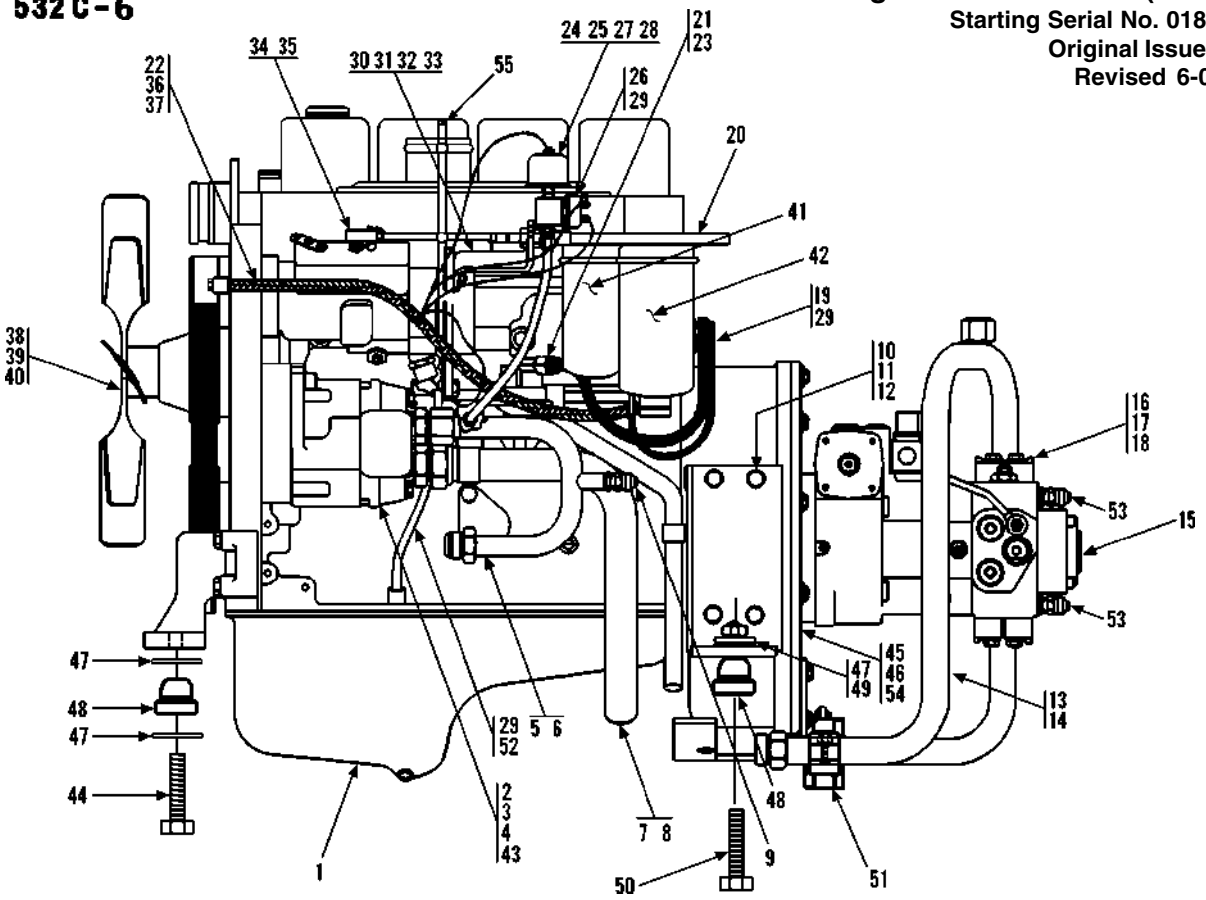

Item	Part No.	Qty.	Description Of Part
1	9108-3012	1	CUMMINS ENGINE
2		Ref	MAIN HYDRAULIC PUMP, (see page 10-17 for details)
3	9108-3143	2	HEX HD CAPSCREW, M12X1.75X75
4	8319-1010	2	LOCKWASHER, M12
5	9108-3233	1	TUBE ASSY
6	8866-2010	1	CONNECTOR, (includes o-ring)
	8859-1209	1	O-RING
7	9108-3144	1	SUCTION TUBE
8	8866-2011	1	CONNECTOR, (includes o-ring)
	8859-1210	1	O-RING
9	7713-3089	1	TEST FITTING
10	9108-6034	2	REAR ENGINE MOUNT
11	8319-1032	8	HEX HD CAPSCREW, M12X1.75X35, (torque to 58-68 ft.lbs.)
12	8319-1010	8	LOCKWASHER, M12
13	9108-3419	1	TUBE ASSY
14	9108-3106	1	O-RING
15		Ref	HYDROSTATIC TRANS. PUMP, (see page 10-18 for details)
16	8471-2738	2	SPLIT FLANGE CLAMP
17	8320-1135	4	HEX HD CAPSCREW, 7/16-14X1-1/2, GR8
18	8855-1012	4	LOCKWASHER, 7/16
19		52"	FUEL LINE HOSE, 7/32" I.D.
20	9108-3404	1	THROTTLE CABLE
21		56"	FUEL LINE HOSE, 5/16" I.D.
22	2486-1170	1	SUPPORT CLAMP
23	9003-0271	1	HOSE NIPPLE
24	2474-1047	1	OIL PRESSURE SWITCH
25	9108-1388	1	TAPPED BAR
26	9103-3246	1	OIL PRESSURE SENDER

Item	Part No.	Qty.	Description Of Part
27	8688-3075	2	TUBE FITTING
28		18"	3/8 NYLON TUBE
29	9002-7187	5	TY-RAP
30	9108-1243	1	THROTTLE CABLE BRACKET
31	8820-1005	2	HEX HD CAPSCREW, 1/4-20X1, GR5
32	8855-1009	2	LOCKWASHER, 1/4
33	8850-1616	2	HEX NUT, 1/4-20
34	9002-7908	1	BALL JOINT
35	8850-1613	1	HEX NUT, #10-32
36		Ref	ENGINE WIRING HARNESS, (see page 11-1 for details)
37	9002-7187	1	TY-RAP
38	9130-3056	1	FAN ASSY
39	8319-1041	4	HEX HD CAPSCREW, M8X1.25X70
40	8856-1108	4	FLAT WASHER, 5/16
41	7738-3202	1	PRIMARY FUEL FILTER ELEMENT
42	7738-3203	1	SECONDARY FUEL FILTER ELEMENT
43	9002-7471	2	WASHER
44	9108-3338	1	HEX HD CAPSCREW, M16X2X120
*45	9134-4048	1	PUMP MOUNTING PLATE
*46	9108-4312	1	COUPLING ASSY, (bolts included)
47	9108-1158	4	SPECIAL WASHER
48	8688-1227	3	LORD MOUNT
49	8852-1010	2	LOCKNUT, 5/8-11
50	8820-1106	2	HEX HD CAPSCREW, 5/8-11X4-1/2, GR5
51	9020-5792	1	CUSHION CLAMP
52	9108-3493	10"	SPLIT LOOM, 1/2" I.D.
53	9108-3475	2	STAUFF TEST COUPLING
54	9108-3019	1	PUMP MOUNT & FLY WHEEL COUPLING, (includes items 45 & 46)
55	9112-4125	1	DIPSTICK

**Changed part number on item 45; description on items 45 & 46.*

ENGINE & ATTACHING PARTS
(9113-5007) Engine Left Side View (532)
Starting Serial No. 0388256
Original Issue 5-96
Revised 6-01-05

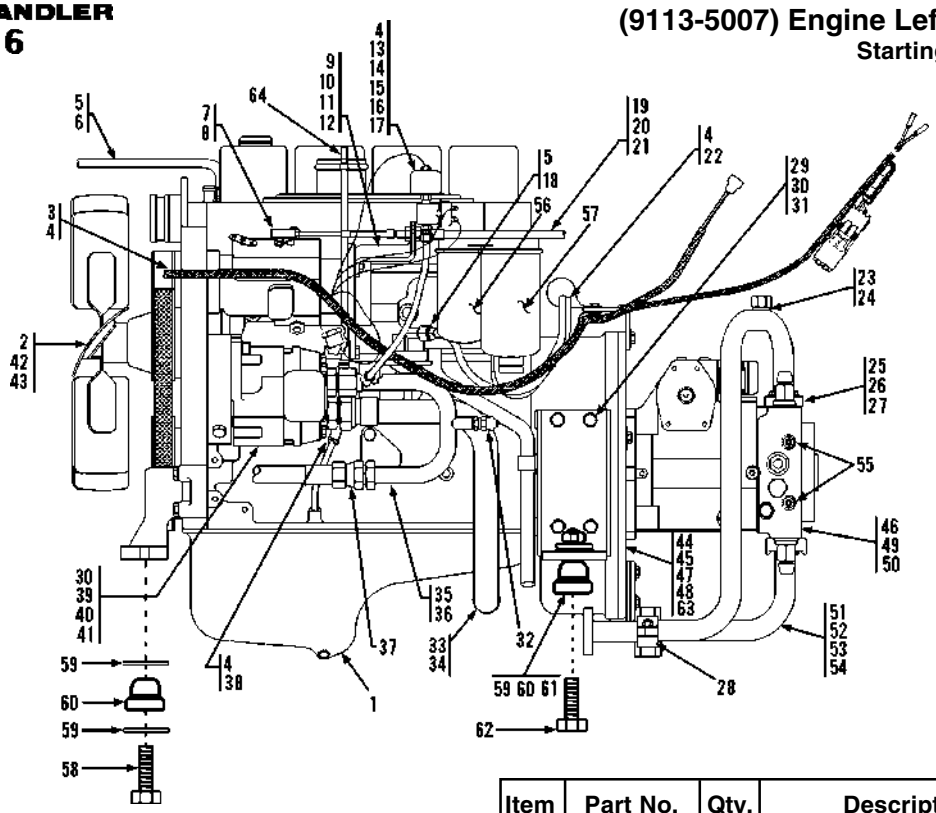

Item	Part No.	Qty.	Description Of Part
	9113-5007	Ref	ENGINE ASSY, (includes items on pages 5-1 and 5-2)
1	9108-3012	1	CUMMINS ENGINE
2	9130-3056	1	FAN ASSY
3	9114-3192	1	WIRING HARNESS, (engine)
4	9002-7187	6	TY-RAP
5		78"	FUEL LINE HOSE, 5/16
6	8688-3106	2	HOSE CLAMP
7	9002-7908	1	BALL JOINT
8	8850-1613	1	HEX NUT, #10-32
9	9108-1243	1	THROTTLE CABLE BRACKET
10	8820-1005	2	HEX HD CAPSCREW, 1/4-20X1
11	8855-1009	2	LOCKWASHER, 1/4
12	8850-1616	2	HEX NUT 1/4-20
13	2474-1047	1	PRESSURE SWITCH
14	9103-3246	1	OIL PRESSURE SENDER
15	9108-1388	1	TAPPED BAR
16	8688-3075	2	TUBE FITTING
17		18"	NYLON TUBE, 3/8
18	9003-0271	1	HOSE NIPPLE
19	9108-3404	1	THROTTLE CABLE
20	9002-8977	1	YOKE END
21	9002-1552	1	CLEVIS PIN
22		56"	FUEL LINE HOSE, 7/32
23	9114-3055	1	TUBE ASSY
24	9108-3106	1	O-RING
25	8471-2738	2	SPLIT FLANGE CLAMP
26	8320-1135	4	HEX HD CAPSCREW, 7/16-14X1-1/2
27	8855-1012	4	LOCKWASHER, 7/16
28	9020-5792	1	CUSHION CLAMP
29	9108-6034	2	REAR ENGINE MOUNTING BRACKET
30	8319-1010	10	LOCKWASHER, M12
31	8319-1032	8	HEX HD CAPSCREW, M12X1.75X35
32	7713-3089	1	TEST FITTING
33	9108-3144	1	SUCTION TUBE
34	8866-2011	1	CONNECTOR, (includes o-ring)
	8859-1210	1	O-RING

Item	Part No.	Qty.	Description Of Part
35	9108-3233	1	TUBE ASSY
36	8866-2010	1	CONNECTOR, (includes o-ring)
	8859-1209	1	O-RING
37	8471-7907	1	HOSE ASSY
38	9108-3493	10"	SPLIT FLEX LOOM, 1/2 ID
39		Ref	MAIN PUMP, (see page 10-17 for details)
40	8319-1057	2	HEX SOCKET HD CAPSCREW, M12X1.75X80
41	9002-7471	2	HARDENED WASHER
42	8319-1041	4	HEX HD CAPSCREW, M8X1.25X70
43	8856-1108	4	WASHER, 5/16
*44	9134-4048	1	PUMP MOUNT PLATE
*45	9108-4312	1	COUPLING ASSY, (bolts included)
46		Ref	HYDROSTATIC TRANSMISSION, (see page 10-18 for details)
47	8821-1068	8	SOCKET HD CAPSREW, 3/8-16X5/8, (torque to 40-45 ft.lbs.)
48	8855-1011	8	LOCKWASHER, 3/8
49	8820-1112	2	HEX HD CAPSCREW, 3/4-10X2-1/4, (torque to 240-265 ft.lbs.)
50	8855-1016	2	LOCKWASHER, 3/4
51	8866-2011	1	CONNECTOR, (includes o-ring)
	8859-1210	1	O-RING
52	9108-3246	1	HOSE
53	9002-8695	2	BAND CLAMP
54	9114-3087	1	INTAKE TUBE
55	9105-3020	2	TEST COUPLING
56	7738-3202	1	PRIMARY FUEL FILTER ELEMENT
57	7738-3203	1	SECONDARY FUEL FILTER ELEMENT
58	9108-3338	1	HEX HD CAPSCREW, M16X2X120
59	9108-1158	4	SPECIAL WASHER
60	8688-1227	3	LORD MOUNT
61	8852-1010	2	LOCKNUT, 5/8-11
62	8820-1106	2	HEX HD CAPSCREW, 5/8-11X4-1/2
63	9108-3019	1	PUMP MOUNT & FLY WHEEL COUPLING, (includes items 44 & 45)
64	9112-4125	1	DIPSTICK
			NOTE: ONLY ITEMS WITH PART NUMBERS ARE AVAILABLE FOR SERVICE.

Changed part number on item 44; description on items 44 & 45.

ENGINE & ATTACHING PARTS
Engine Right Side View (532C-6)

Starting Serial No.0188002
Original Issue 1-90
Revised 9-19-95

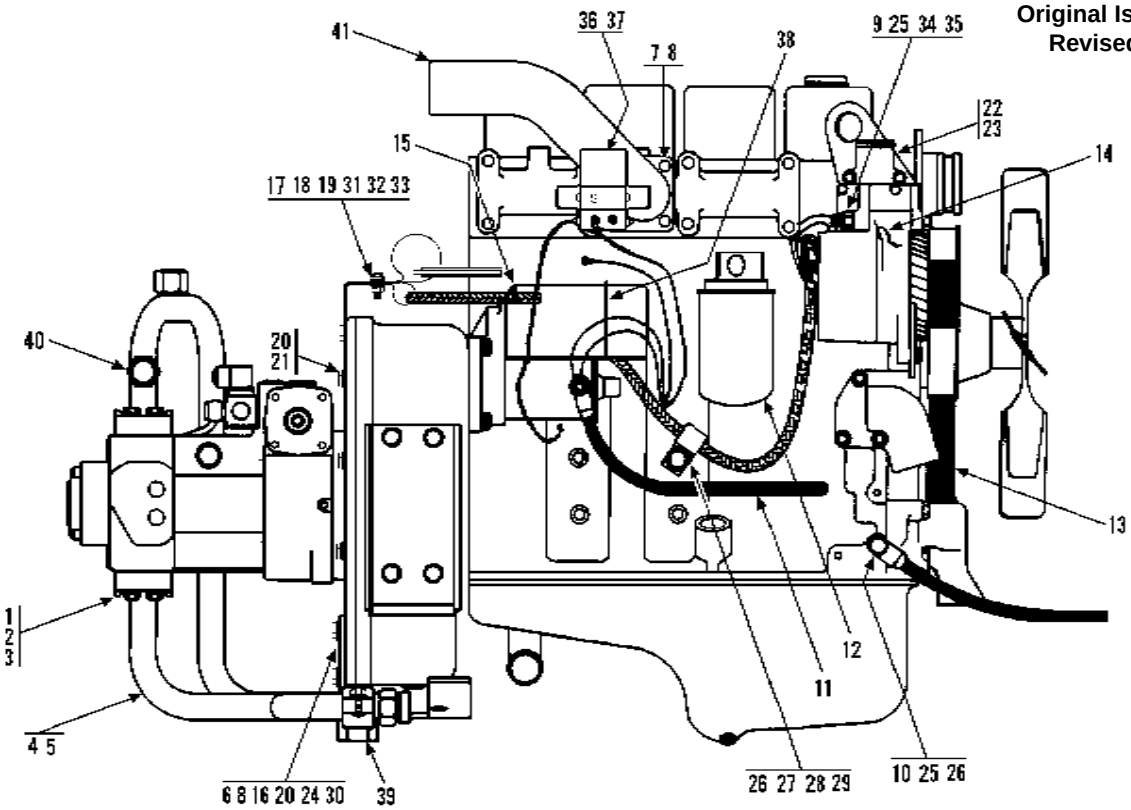

Item	Part No.	Qty.	Description Of Part
	9108-5053	1	CUMMIINS ENGINE FILTER KIT, (includes all items)
	9108-4001	1	OIL FILTER
	7738-3202	1	PRIMARY FUEL, FILTER ELEMENT
	7738-3203	1	SECONDARY FUEL, FILTER ELEMENT
	9108-3218	1	FUEL FILTER
	9020-6262	1	AIR FILTER ELEMENT

Item	Part No.	Qty.	Description Of Part-
1	8471-2738	2	SPLIT FLANGE CLAMP
2	8320-1135	4	HEX HD CAPSCREW, 7/16-14X1-1/2, GR8
3	8855-1012	4	LOCKWASHER, 7/16
* 4	9109-3008	1	TUBE ASSY
5	9108-3106	1	O-RING
* 6	9108-6130	1	TUBE SUPPORT (shown)
	9108-6131	1	TUBE SUPPORT (not shown)
7	8319-1021	4	HEX HD CAPSCREW, M10X1.5X30
* 8	8319-1013	8	LOCKWASHER M10
* 9	8856-1108	1	WASHER, 5/16
*10	9112-3032	1	NEG. BATTERY CABLE
*11	9112-3033	1	POS. BATTERY CABLE
12	9108-4001	1	OIL FILTER ELEMENT
13	9108-4162	1	FAN/ALT. BELT
*14	9108-3503	1	ALTERNATOR
	9108-3504	1	REGULATOR (supplied with alternator)
*15	9108-3456	1	STARTER
*16	8319-1006	1	HEX HD CAPSCREW, M10X1.5X40
*17	9109-1001	1	CLAMP SUPPORT
*18	8820-1018	2	HEX HD CAPSCREW, 5/16-18X3/4, GR5

Item	Part No.	Qty.	Description Of Part
*19	2486-1170	2	SUPPORT CLAMP
*20	8319-1021	9	HEX HD CAPSCREW, M10X1.5X30
21	8319-1013	8	LOCKWASHER, M10
22	9020-6124	1	WATER TEMP. SENDER
23	8871-1384	1	REDUCING BUSHING, 1/2X1/4
*24	8856-1109	3	FLAT WASHER, 3/8
*25	8319-1011	1	LOCKWASHER, M8
*26	8319-1004	2	HEX HD CAPSCREW, M12X1.75X30
*27	8319-1010	2	LOCKWASHER, M12
28	8856-1111	1	FLAT WASHER, 1/2
29	8584-1150	1	SUPPORT CLAMP
*30	8319-1005	2	HEX HD CAPSCREW, M10X1.5X45
*31	8850-1005	2	HEX NUT, 5/16-18
*32	9002-8660	2	INSULATED HOSE CLIP
*33	8855-1010	2	LOCKWASHER, 5/16
*34	8319-1007	1	HEX HD CAPSCREW, M8X1.25X16
*35	8594-1016	1	SUPPORT CLAMP
*36	9020-5205	1	JUMPER WIRE
*37	9040-2427	1	STARTER SOLENOID
*38	9002-7187	1	TIE WRAP
*39	9020-5792	1	CUSHION CLAMP
*40	8471-4006	2	ORS CAP
*41	9108-6055	1	EXHAUST TUBING

** Changed part numbers on items 4, 6, 9, 10, 11, 14, 15, 17, 18, 19 & 25. Changed quantities on items 8, 16, 20, 24, 26 & 27. Added items 30 thru 41.*

ENGINE & ATTACHING PARTS
(9113-5007) Engine Right Side View (532)

Starting Serial No.0388256
Original Issue 5-96
Revised 11-29-00

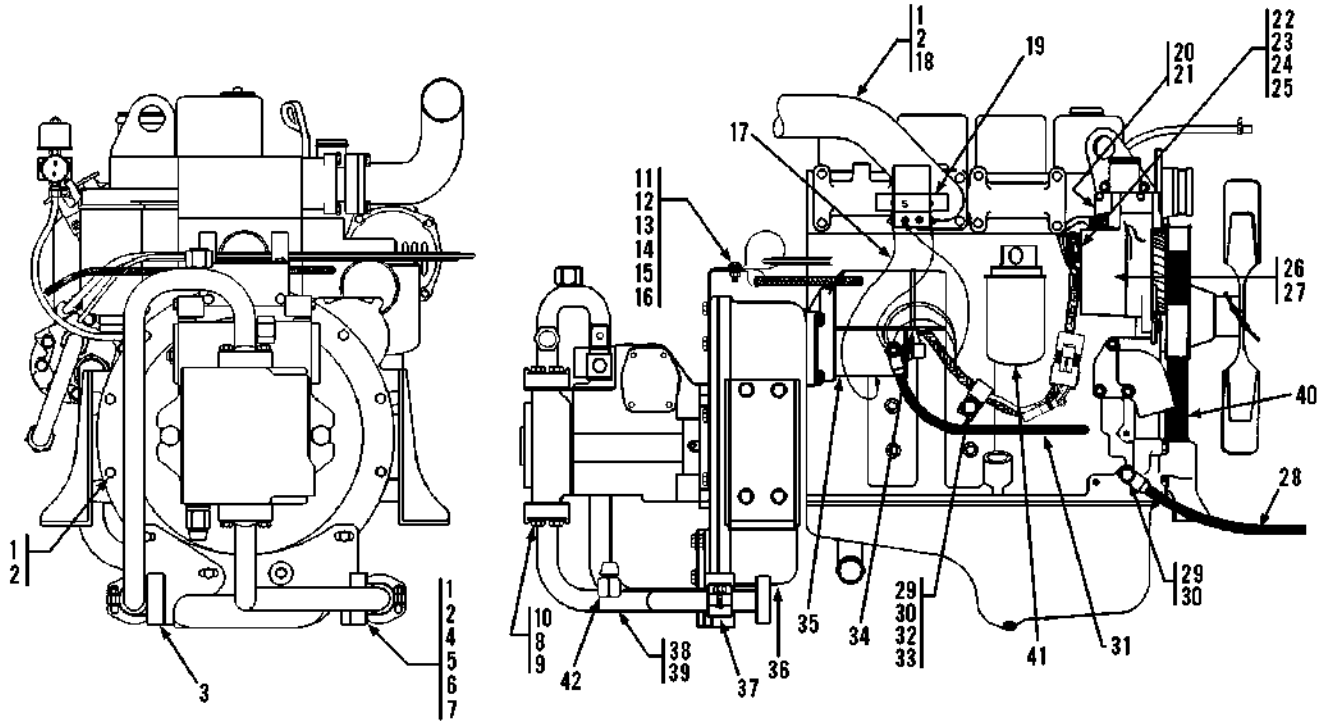

Item	Part No.	Qty.	Description Of Part
	9108-5053	1	CUMMINS ENGINE FILTER KIT, (includes all items)
	9108-4001	1	OIL FILTER ELEMENT
	7738-3202	1	PRIMARY FUEL, FILTER ELEMENT
	7738-3203	1	SECONDARY FUEL, FILTER ELEMENT
	9108-3218	1	FUEL FILTER
	9020-6262	1	AIR FILTER ELEMENT

Item	Part No.	Qty.	Description Of Part-
	9113-5007	Ref	ENGINE ASSY, (includes all items on pages 5-1 and 5-2)
1	8319-1021	13	HEX HD CAPSCREW, M10X1.5X30
2	8319-1013	16	LOCKWASHER, M10
3	9108-6131	1	TUBE SUPPORT
4	9108-6130	1	TUBE SUPPORT
* 5	8856-1109	3	FLAT WASHER, 3/8
6	8319-1006	1	HEX HD CAPSCREW, M10 x 1.5X40
7	8319-1005	2	HEX HD CAPSCREW, M10 x 1.5X45
8	8471-2738	2	SPLIT FLANGE CLAMP
9	8320-1135	4	HEX HD CAPSCREW, 7/16-14X1-1/2
10	8855-1012	4	LOCKWASHER, 7/16
11	8855-1010	2	LOCKWASHER, 5/16
12	9002-8660	2	INSULATED HOSE CLIP
13	8850-1005	2	HEX NUT, 5/16-18
14	2486-1170	2	SUPPORT CLAMP
*15	8820-1018	2	HEX HD CAPSCREW, 5/16-18X3/4, GR5
16	9109-1001	1	CLAMP SUPPORT
17	9020-5205	1	JUMPER WIRE
18	9108-6055	1	EXHAUST TUBING
19	9040-2427	1	STARTER RELAY
20	9020-6124	1	WATER TEMPERATURE SENDER
21	8871-1384	1	REDUCER BUSHING

Item	Part No.	Qty.	Description Of Part
*22	8856-1108	1	FLAT WASHER, 5/16
23	8319-1011	1	LOCKWASHER, M8
24	8319-1007	1	HEX HD CAPSCREW, M8X1.25X16
25	8594-1016	1	SUPPORT CLAMP
26	9108-3503	1	ALTERNATOR, (includes item 27)
27	9108-3504	1	REGULATOR
28	9112-3032	1	NEGATIVE BATTERY CABLE
29	8319-1004	2	HEX HD CAPSCREW, M12X1.75X30
30	8319-1010	2	LCKWASHER, M12
31	9112-3033	1	POSITIVE BATTERY CABLE
*32	8856-1111	1	FLAT WASHER, 1/2
*33	9114-3122	1	SUPPORT CLAMP
34	9002-7187	1	TIE WRAP
35	9108-3456	1	STARTER
*36	8871-1284	1	HEX SOCKET PIPE PLUG, 3/4
37	9020-5792	1	CUSHION CLAMP
38	9109-3017	1	TUBE ASSY
39	9108-3106	1	O-RING
40	9108-4162	1	FAN/ALTERNATOR BELT
41	9108-4001	1	OIL FILTER ELEMENT
*42	8866-2064	1	ELBOW - 90 DEGREES, (includes o-ring)
	8859-1204	1	O-RING

** Revised description of items 5, 15, 22, 32, 36, & 42, part number on item 33.*

ENGINE & ATTACHING PARTS
Engine Left Side View (534C-6)

Starting Serial No. 0188002
Original Issue 1-90
Revised 6-01-05

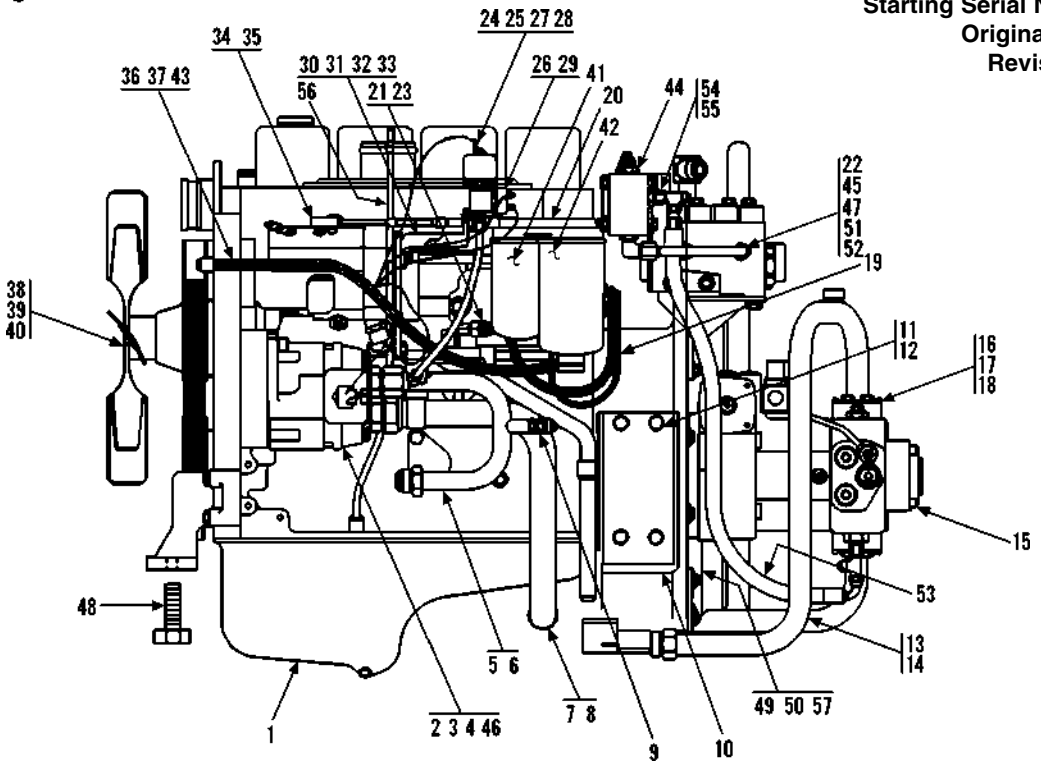

Item	Part No.	Qty.	Description Of Part
1	9108-3012	1	CUMMINS ENGINE
2		Ref	MAIN HYDRAULIC PUMP, (see page 10-17 for details)
3	9108-3143	2	HEX HD CAPSCREW, M12X1.75X75
4	8319-1010	2	LOCKWASHER, M12
5	9108-3233	1	TUBE ASSY
6	8866-2010	1	CONNECTOR, (includes o-ring)
	8859-1209	1	O-RING
7	9108-3144	1	SUCTION TUBE
8	8866-2011	1	CONNECTOR, (includes o-ring)
	8859-1210	1	O-RING
9	7713-3089	1	TEST FITTING
10	9108-6034	2	REAR ENGINE MOUNT
11	8319-1004	8	HEX HD CAPSCREW, M12X1.75X30
12	8319-1010	8	LOCKWASHER, M12
13	9108-3104	1	TUBE ASSY
14	9108-3106	1	O-RING
15		Ref	HYDROSTATIC TRANS. PUMP, (see page 10-18 for details)
16	8471-2738	2	SPLIT FLANGE CLAMP
17	8320-1135	4	HEX HD CAPSCREW, 7/16-14X1-1/2, GR8
18	8855-1012	4	LOCKWASHER, 7/16
19		52"	FUEL LINE HOSE, 7/32" I.D.
20	9108-3404	1	THROTTLE CABLE
21		56"	FUEL LINE HOSE, 5/16" I.D.
22	8471-8129	1	HOSE ASSY
23	9003-0271	1	HOSE NIPPLE
24	2474-1047	1	OIL PRESSURE SWITCH
25	9108-1388	1	TAPPED BAR
26	9103-3246	1	OIL PRESSURE SENDER
27	8688-3075	2	TUBE FITTING
28		18"	3/8 NYLON TUBE
29	9002-7187	1	TY-RAP
30	9108-1243	1	THROTTLE CABLE BRACKET

Item	Part No.	Qty.	Description Of Part
31	8820-1005	2	HEX HD CAPSCREW, 1/4-20X1, GR5
32	8855-1009	2	LOCKWASHER, 1/4
33	8850-1616	2	HEX NUT, 1/4-20
34	9002-7908	1	BALL JOINT
35	8850-1613	1	HEX NUT, #10-32
36		Ref	ENGINE WIRING HARNESS, (see page 11-2 for details)
37	9002-7187	1	TY-RAP
38	9108-3072	1	FAN ASSY
39	8319-1041	4	HEX HD CAPSCREW, M8X1.25X70
40	8856-1108	4	FLAT WASHER, 5/16
41	7738-3202	1	PRIMARY FUEL FILTER ELEMENT
42	7738-3203	1	SECONDARY FUEL FILTER ELEMENT
43	2486-1170	1	SUPPORT CLAMP
44		Ref	MANIFOLD ASSY, (see page 10-21 for details)
45	8471-8129	2	HOSE ASSY
46	8540-1340	2	WASHER
47	8859-1506	4	O-RING
48	9108-3338	1	HEX HD CAPSCREW, M16X2X120
*49	9134-4048	1	PUMP MOUNT PLATE
*50	9108-4312	1	COUPLING ASSY, (bolts included)
51	8866-2440	2	STRAIGHT THREAD CONNECTOR, (includes o-ring)
	8859-1506	2	O-RING
52	8866-2330	2	ELBOW, 90 DEGREES, (includes o-ring)
	8859-1506	2	O-RING
53	8471-7597	1	HOSE ASSY
54	8866-2018	1	STRAIGHT THREAD CONNECTOR, (includes o-ring)
	8859-1205	1	O-RING
55	8866-2239	1	SWIVEL NUT RUN TEE, 3/8 TUBE
56	9112-4125	1	DIPSTICK
57	9108-3019	1	PUMP MOUNT AND FLYWHEEL COUPLING, (includes items 49 & 50)

**Changed part number on item 49; description on items 49 & 50.*

ENGINE & ATTACHING PARTS
(9112-5026) Engine Left Side View (534C-6)

Starting Serial No. 0188251
Original Issue 7-93
Revised 6-01-05

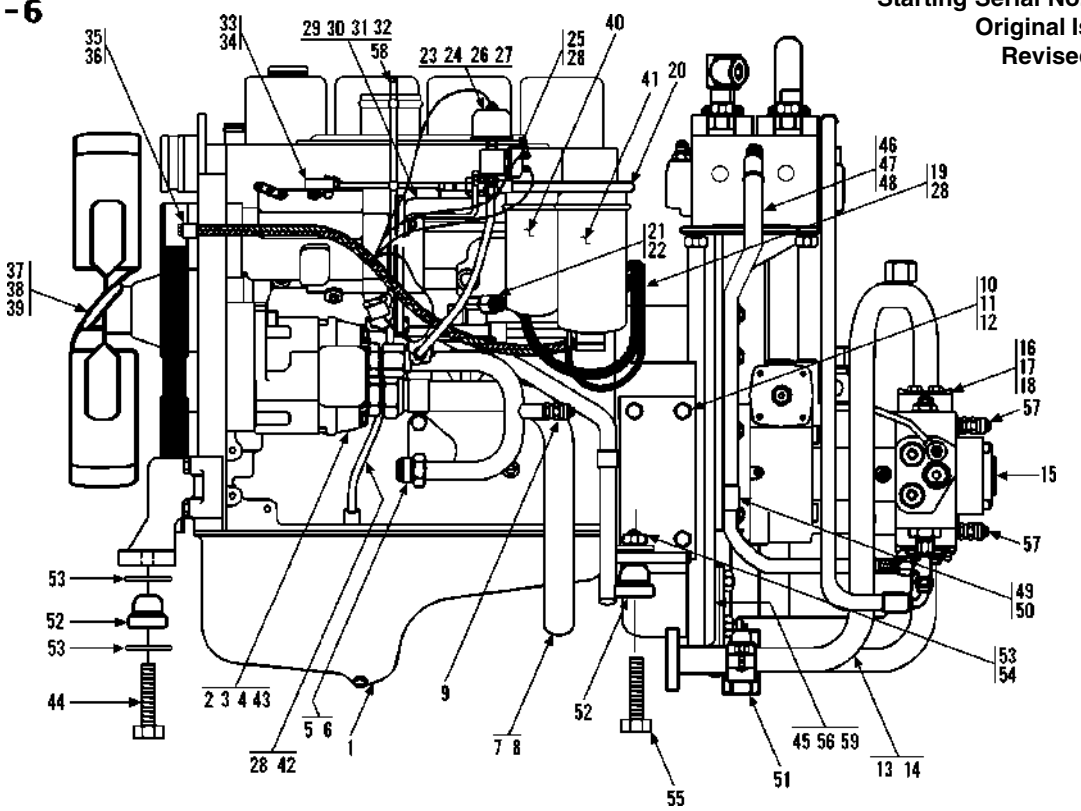

Item	Part No.	Qty.	Description Of Part
	9112-5026	Ref	ENGINE ASSY, (includes all items on pages 5-3 & 5-4)
1	9108-3012	1	CUMMINS ENGINE
2		Ref	MAIN HYDRAULIC PUMP, (see page 10-17 for details)
3	8319-1057	2	HEX SOCKET HD CAPSCREW, M12X1.75X80
4	8319-1010	2	LOCKWASHER, M12
5	9108-3233	1	TUBE ASSY
6	8866-2010	1	CONNECTOR, (includes o-ring)
	8859-1209	1	O-RING
7	9108-3144	1	SUCTION TUBE
8	8866-2011	1	CONNECTOR, (includes o-ring)
	8859-1210	1	O-RING
9	7713-3089	1	TEST FITTING
10	9108-6034	2	REAR ENGINE MOUNT
11	8319-1032	8	HEX HD CAPSCREW, M12X1.75X35
12	8319-1010	8	LOCKWASHER, M12
13	9108-3419	1	TUBE ASSY
14	9108-3106	1	O-RING
15		Ref	HYDROSTATIC TRANS. PUMP, (see page 10-18 for details)
16	8471-2738	2	SPLIT FLANGE CLAMP
17	8320-1135	4	HEX HD CAPSCREW, 7/16-14X1-1/2, GR8
18	8855-1012	4	LOCKWASHER, 7/16
19		56"	FUEL LINE HOSE, 7/32" I.D.
20	9108-3404	1	THROTTLE CABLE
21		60"	FUEL LINE HOSE, 5/16" I.D.
22	9003-0271	1	HOSE NIPPLE
23	2474-1047	1	OIL PRESSURE SWITCH
24	9108-1388	1	TAPPED BAR
25	9103-3246	1	OIL PRESSURE SENDER
26	8688-3075	2	TUBE FITTING

Item	Part No.	Qty.	Description Of Part
27		18"	3/8 NYLON TUBE
28	9002-7187	5	TY-RAP
29	9108-1243	1	THROTTLE CABLE BRACKET
30	8820-1005	2	HEX HD CAPSCREW, 1/4-20X1, GR5
31	8855-1009	2	LOCKWASHER, 1/4
32	8850-1616	2	HEX NUT, 1/4-20
33	9002-7908	1	BALL JOINT
34	8850-1613	1	HEX NUT, #10-32
35		Ref	ENGINE WIRING HARNESS, (see page 11-2 for details)
36	9002-7187	1	TY-RAP
37	9130-3056	1	FAN ASSY
38	8319-1041	4	HEX HD CAPSCREW, M8X1.25X70
39	8856-1108	4	FLAT WASHER, 5/16
40	7738-3202	1	PRIMARY FUEL FILTER ELEMENT
41	7738-3203	1	SECONDARY FUEL FILTER ELEMENT
42	9108-3493	10"	FLEX LOOM, 1/2" I.D.
43	9002-7471	2	WASHER
44	9108-3338	1	HEX HD CAPSCREW, M16X2X120
*45	9134-4048	1	PUMP MOUNT PLATE
46	8471-8207	1	HOSE ASSY
47	9108-3306	1	STRAIGHT THREAD CONNECTOR
48	8859-1206	1	O-RING
49	8594-1017	1	SUPPORT CLAMP
50	8856-1109	1	WASHER, 3/8
51	9020-5792	1	CUSHION CLAMP
52	8688-1227	3	SHOCK MOUNT
53	9108-1158	4	SPECIAL WASHER
54	8852-1010	2	LOCKNUT
55	8820-1106	2	HEX HD CAPSCREW, 5/8-11X4-1/2, GR5
*56	9108-4312	1	COUPLING ASSY, (bolts included)
57	9108-3475	2	TEST COUPLING
58	9112-4125	1	DIPSTICK
59	9108-3019	1	PUMP MOUNT & COUPLING, (includes items 45 & 56)

**Changed part number on item 45; description on items 45 & 56.*

ENGINE & ATTACHING PARTS
(9112-5049) Engine Left Side View (534C-6)

Starting Serial No. 0388256
Original Issue 5-96
Revised 6-01-05

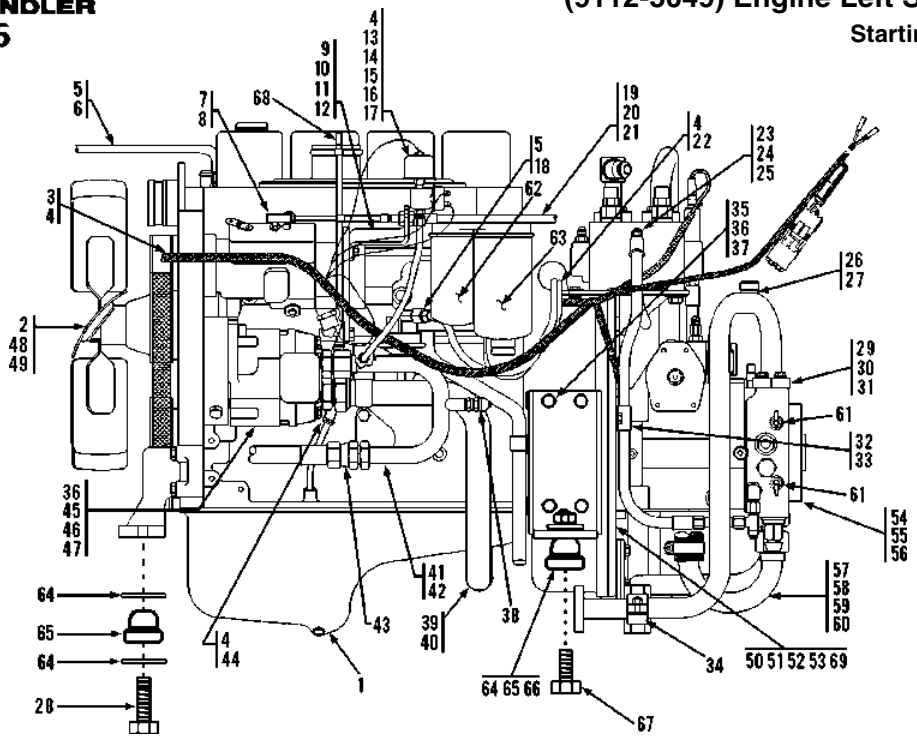

Item	Part No.	Qty.	Description Of Part
	9112-5049	Ref	ENGINE ASSY, (includes items on pages 5-3 and 5-4)
1	9108-3012	1	CUMMINS ENGINE
2	9130-3056	1	FAN ASSY
3	9114-3192	1	WIRING HARNESS, (engine)
4	9002-7187	6	TY-RAP
5		78"	FUEL LINE HOSE, 5/16
6	8688-3106	2	HOSE CLAMP
7	9002-7908	1	BALL JOINT
8	8850-1613	1	HEX NUT, #10-32
9	9108-1243	1	THROTTLE CABLE BRACKET
10	8820-1005	2	HEX HD CAPSCREW, 1/4-20X1,GR5
11	8855-1009	2	LOCKWASHER, 1/4
12	8850-1616	2	HEX NUT, 1/4-20
13	2474-1047	1	PRESSURE SWITCH
14	9103-3246	1	OIL PRESSURE SENDER
15	9108-1388	1	TAPPED BAR
16	8688-3075	2	TUBE FITTING
17		18"	NYLON TUBE, 3/8
18	9003-0271	1	HOSE NIPPLE
19	9108-3404	1	THROTTLE CABLE
20	9002-8977	1	YOKE END
21	9002-1552	1	CLEVIS PIN
22		56"	FUEL LINE HOSE, 7/32
23	9108-3306	1	CONNECTOR
24	7713-3447	1	HOSE ASSY
25	8859-1206	1	O-RING
26	9114-3055	1	TUBE ASSY
27	9108-3106	1	O-RING
28	9108-3338	1	HEX HD CAPSCREW, M16X2X120
29	8471-2738	2	SPLIT FLANGE CLAMP
30	8320-1135	4	HEX HD CAPSCREW, 7/16-14X1-1/2
31	8855-1012	4	LOCKWASHER, 7/16
32	8594-1017	1	SUPPORT CLAMP
33	8856-1109	1	WASHER, 3/8
34	9020-5792	1	CUSHION CLAMP
35	9108-6034	2	REAR ENGINE MOUNTING BRACKET
36	8319-1010	10	LOCKWASHER, M12
37	8319-1032	8	HEX HD CAPSCREW, M12X1.75X35
38	7713-3089	1	TEST FITTING
39	9108-3144	1	SUCTION TUBE
40	8866-2011	1	CONNECTOR, (includes o-ring)
	8859-1210	1	O-RING

Item	Part No.	Qty.	Description Of Part
41	9108-3233	1	TUBE ASSY
42	8866-2010	1	CONNECTOR, (includes o-ring)
	8859-1210	1	O-RING
43	8471-7907	1	HOSE ASSY
44	9108-3493	10"	SPLIT FLEX LOOM, 1/2 ID
45		Ref	MAIN PUMP, (see page 10-17 for details)
46	8319-1057	2	SOCKET HD CAPSCREW, M12X1.75X80
47	9002-7471	2	HARDENED WASHER
48	8319-1041	4	HEX HD CAPSCREW, M8X1.25X70
49	8856-1108	4	WASHER, 5/16
*50	9134-4048	1	PUMP MOUNT PLATE
*51	9108-4312	1	COUPLING ASSY, (bolts included)
52	8821-1068	8	SOCKET HD CAPSCREW, 3/8-16X5/8, (torque to 40-45 ft.lbs.)
53	8855-1011	8	LOCKWASHER, 3/8
54		Ref	HYDROSTATIC TRANSMISSION, (see page 10-18 for details)
55	8820-1112	2	HEX HD CAPSCREW, 3/4-10X2-1/4, (torque to 240-265 ft.lbs.)
56	8855-1016	2	LOCKWASHER, 3/4
57	8866-2011	1	CONNECTOR, (includes o-ring)
	8859-1210	1	O-RING
58	9114-3087	1	INTAKE TUBE
59	9108-3246	1	HOSE
60	9002-8695	2	BAND CLAMP
61	9105-3020	2	TEST COUPLING
62	7738-3202	1	PRIMARY FUEL FILTER
63	7738-3203	1	SECONDARY FUEL FILTER
64	9108-1158	4	SPECIAL WASHER
65	8688-1227	3	LORD MOUNT
66	8852-1010	2	LOCKNUT, 5/8-11
67	8820-1106	2	HEX HD CAPSCREW, 5/8-11X4-1/2, GR5
68	9112-4125	1	DIPSTICK
69	9108-3019	1	PUMP MOUNT & FLYWHEEL COUPLING, (includes items 50 & 51)
			NOTE: ONLY ITEMS WITH PART NUMBERS ARE AVAILABLE FOR SERVICE.

Changed part number on item 50; description on items 50 & 51.

ENGINE & ATTACHING PARTS
(9112-5099) Engine Left Side View
Starting Serial No. 0488238
Original Issue 8-97
Revised 6-01-05

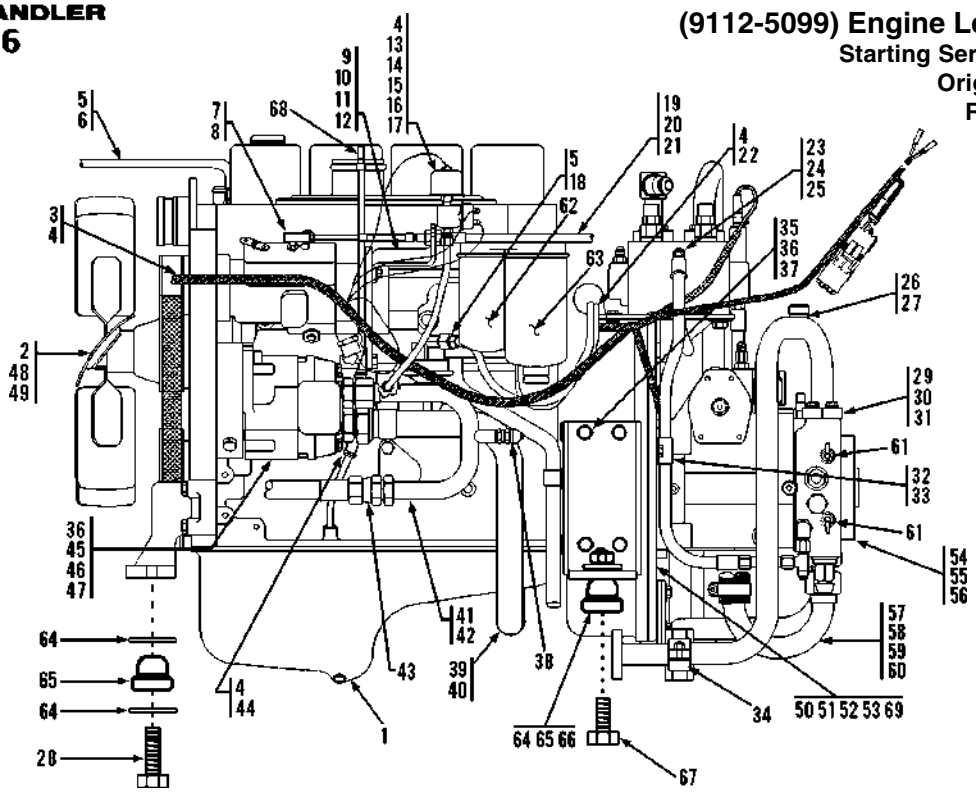

Item	Part No.	Qty.	Description Of Part
	9112-5099	Ref	ENGINE ASSY, (includes items on pages 5-3 and 5-4)
1	9108-3012	1	CUMMINS ENGINE
2	9130-3056	1	FAN ASSY
3	9112-3166	1	WIRING HARNESS, (engine)
4	9002-7187	6	TY-RAP
5		78"	FUEL LINE HOSE, 5/16
6	8688-3106	2	HOSE CLAMP
7	9002-7908	1	BALL JOINT
8	8850-1613	1	HEX NUT, #10-32
9	9108-1243	1	THROTTLE CABLE BRACKET
10	8820-1005	2	HEX HD CAPSCREW, 1/4-20X1,GR5
11	8855-1009	2	LOCKWASHER, 1/4
12	8850-1616	2	HEX NUT, 1/4-20
13	2474-1047	1	PRESSURE SWITCH
14	9114-3315	1	OIL PRESSURE SENDER
15	9108-1388	1	TAPPED BAR
16	8688-3075	2	TUBE FITTING
17		18"	NYLON TUBE, 3/8
18	9003-0271	1	HOSE NIPPLE
19	9108-3404	1	THROTTLE CABLE
20	9002-8977	1	YOKE END
21	9002-1552	1	CLEVIS PIN
22		56"	FUEL LINE HOSE, 7/32
23	9108-3306	1	CONNECTOR
24	7713-3447	1	HOSE ASSY
25	8859-1206	1	O-RING
26	9114-3055	1	TUBE ASSY
27	9108-3106	1	O-RING
28	9108-3338	1	HEX HD CAPSCREW, M16X2X120
29	8471-2738	2	SPLIT FLANGE CLAMP
30	8320-1135	4	HEX HD CAPSCREW, 7/16-14X1-1/2
31	8855-1012	4	LOCKWASHER, 7/16
32	8594-1017	1	SUPPORT CLAMP
33	8856-1109	1	WASHER, 3/8
34	9020-5792	1	CUSHION CLAMP
35	9108-6034	2	REAR ENGINE MOUNTING BRACKET
36	8319-1010	10	LOCKWASHER, M12
37	8319-1032	8	HEX HD CAPSCREW, M12X1.75X35
38	7713-3089	1	TEST FITTING
39	9108-3144	1	SUCTION TUBE
40	8866-2011	1	CONNECTOR, (includes o-ring)
	8859-1210	1	O-RING

Item	Part No.	Qty.	Description Of Part
41	9108-3233	1	TUBE ASSY
42	8866-2010	1	CONNECTOR, (includes o-ring)
	8859-1210	1	O-RING
43	8471-7907	1	HOSE ASSY
44	9108-3493	10"	SPLIT FLEX LOOM, 1/2 ID
45		Ref	MAIN PUMP, (see page 10-17 for details
46	8319-1057	2	SOCKET HD CAPSCREW, M12x1.75x80
47	9002-7471	2	HARDENED WASHER
48	8319-1041	4	HEX HD CAPSCREW, M8 x 1.25 x 70
49	8856-1108	4	WASHER, 5/16
*50	9134-4048	1	PUMP MOUNT PLATE
*51	9108-4312	1	COUPLING ASSY, (bolts included)
52	8821-1068	8	SOCKET HD CAPSCREW, 3/8-16X5/8, (torque to 40-45 ft.lbs.)
53	8855-1011	8	LOCKWASHER, 3/8
54		Ref	HYDROSTATIC TRANSMISSION, (see page 10-18 for details)
55	8820-1112	2	HEX HD CAPSCREW, 3/4-10X2-1/4, (torque to 240-265 ft.lbs.)
56	8855-1016	2	LOCKWASHER, 3/4
57	8866-2011	1	CONNECTOR, (includes o-ring)
	8859-1210	1	O-RING
58	9114-3087	1	INTAKE TUBE
59	9108-3246	1	HOSE
60	9002-8695	2	BAND CLAMP
61	9105-3020	2	TEST COUPLING
62	7738-3202	1	PRIMARY FUEL FILTER
63	7738-3203	1	SECONDARY FUEL FILTER
64	9108-1158	4	SPECIAL WASHER
65	8688-1227	3	LORD MOUNT
66	8852-1010	2	LOCKNUT, 5/8-11
67	8820-1106	2	HEX HD CAPSCREW, 5/8-11X4-1/2, GR5
68	9112-4125	1	DIPSTICK
69	9108-3019	1	PUMP MOUNT & FLYWHEEL COUPLING, (includes items 50 & 51)

NOTE: ONLY ITEMS WITH PART NUMBERS ARE AVAILABLE FOR SERVICE.

Changed part number on item 50; description on items 50 & 51.

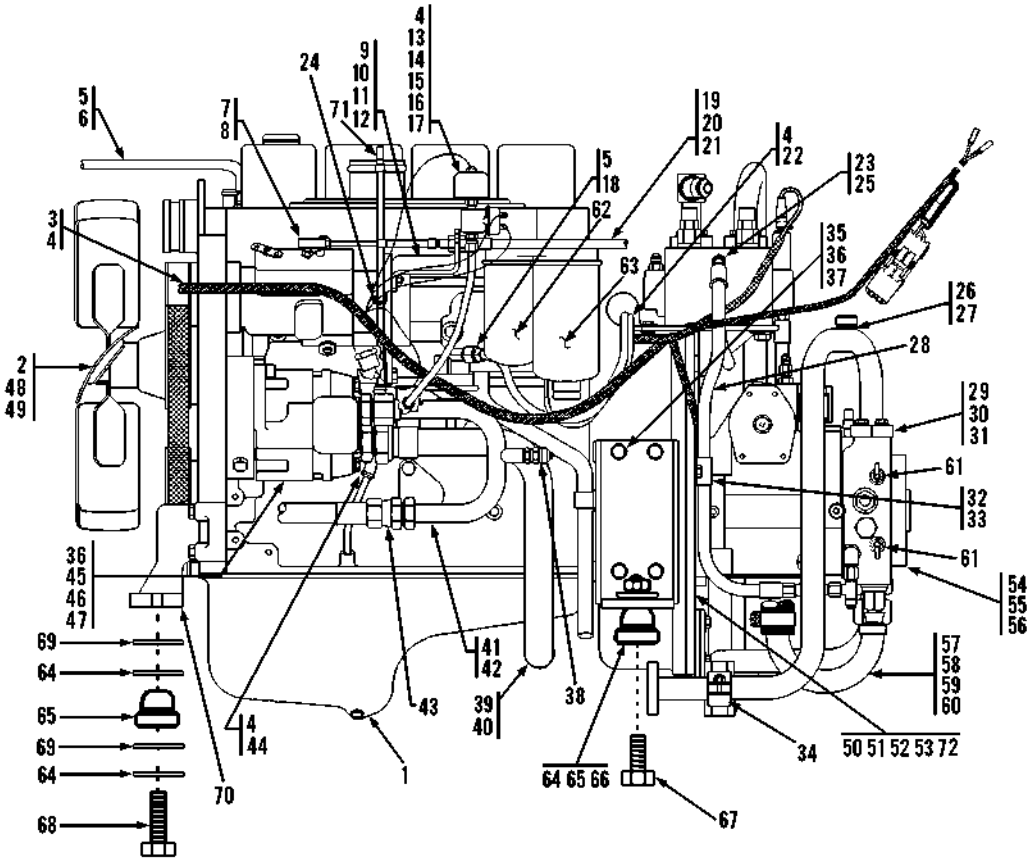

Item	Part No.	Qty.	Description Of Part
	9108-5053	1	CUMMINS ENGINE FILTER KIT, (includes all items)
	9108-4001	1	OIL FILTER ELEMENT
	7738-3202	1	PRIMARY FUEL, FILTER ELEMENT
	7738-3203	1	SECONDARY FUEL, FILTER ELEMENT
	9108-3218	1	FUEL FILTER
	9020-6262	1	AIR FILTER ELEMENT

** Added items 71 & 72.*

ENGINE & ATTACHING PARTS
(9132-5007) Engine Left Side View (534C-6 TURBO)

Starting Serial No. 0388256
Original Issue 5-96
Revised 9-29-99

Item	Part No.	Qty.	Description Of Part
	9132-5007	Ref	ENGINE ASSY(includes items on pages 5-3 and 5-4)
1	9132-3008	1	CUMMINS ENGINE
2	9114-3043	1	FAN ASSY
3	9114-3192	1	WIRING HARNESS(engine)
4	9002-7187	6	TY-RAP
5		78"	FUEL LINE HOSE, 5/16
6	8688-3106	2	HOSE CLAMP
7	9002-7908	1	BALL JOINT
8	8850-1613	1	HEX NUT, #10-32
9	9114-1317	1	THROTTLE CABLE BRACKET
10	8820-1005	2	HEX HD CAPSCREW, 1/4-20 x 1
11	8855-1009	2	LOCKWASHER, 1/4
12	8850-1616	2	HEX NUT 1/4-20
13	2474-1047	1	PRESSURE SWITCH
14	9103-3246	1	OIL PRESSURE SENDER
15	9108-1388	1	TAPPED BAR
16	8688-3075	2	TUBE FITTING
17		18"	NYLON TUBE, 3/8
18	9003-0271	1	HOSE NIPPLE
19	9114-3112	1	THROTTLE CABLE
20	9002-8977	1	YOKE END
21	9002-1552	1	CLEVIS PIN
22		56"	FUEL LINE HOSE, 7/32
23	9108-3306	1	CONNECTOR
24	8584-1094	1	SUPPORT CLAMP
25	8859-1206	1	O-RING
26	9116-3122	1	TUBE ASSY
27	9108-3106	1	O-RING
28	7713-3447	1	HOSE ASSY
29	8471-2738	2	SPLIT FLANGE CLAMP
30	8320-1135	4	HEX HD CAPSCREW, 7/16-14 x 1-1/2, GR5
31	8855-1012	4	LOCKWASHER, 7/16
32	8594-1017	1	SUPPORT CLAMP
33	8856-1109	1	WASHER, 3/8
34	9020-5792	1	CUSHION CLAMP
35	9108-6034	1	REAR ENGINE MOUNTING BRACKET
	9132-6006	1	R.H. REAR ENGINE MOUNTING BRACKET
36	8319-1010	10	LOCKWASHER, M12
37	8319-1032	8	HEX HD CAPSCREW M12 x 1.75 x 35
38	7713-3089	1	TEST FITTING
39	9108-3144	1	SUCTION TUBE
40	8866-2011	1	CONNECTOR (includes o-ring)
	8859-1210	1	O-RING
41	9108-3233	1	TUBE ASSY
42	8866-2010	1	CONNECTOR (includes o-ring)
	8859-1210	1	O-RING
43	8471-8758	1	HOSE ASSY
44	9108-3493	10"	SPLIT FLEX LOOM, 1/2 ID
45		Ref	MAIN PUMP (see page 10-17 for details
46	8319-1057	2	SOCKET HD CAPSCREW, M12x1.75x80
47	9002-7471	2	HARDENED WASHER
48	8319-1039	4	HEX HD CAPSCREW, M8 x 1.25 x 80
49	8856-1108	4	WASHER, 5/16
50	9108-4311	1	FLEX PLATE
51	9108-4312	1	COUPLER (bolts included)
52	8821-1068	8	SOCKET HD CAPSCREW, 3/8-16X5/8 (torque to 40-45 ft.lbs.)
53	8855-1011	8	LOCKWASHER, 3/8
54		Ref	HYDROSTATIC TRANSMISSION (see page 10-18 for details)
55	8820-1112	2	HEX HD CAPSCREW, 3/4-10X2-1/4, (torque to 240-265 ft.lbs.)
56	8855-1016	2	LOCKWASHER, 3/4
57	8866-2011	1	CONNECTOR (includes o-ring)
	8859-1210	1	O-RING
58	9114-3087	1	INTAKE TUBE
59	9108-3246	1	HOSE
60	9002-8695	2	BAND CLAMP
61	9105-3020	2	TEST COUPLING
62	7738-3202	1	PRIMARY FUEL FILTER
63	7738-3203	1	SECONDARY FUEL FILTER
64	9108-1158	4	SPECIAL WASHER
65	8688-1227	3	LORD MOUNT
66	8852-1010	2	LOCKNUT, 5/8-11
67	8820-1106	2	HEX HD CAPSCREW, 5/8-11X4-1/2
68	9132-3006	1	HEX HD CAPSCREW, M12X120
69	9132-1014	2	REBOUND WASHER
70	9132-1013	1	SPACER
*71	9112-4125	1	DIPSTICK
*72	9108-3019	1	PUMP MOUNT & FLYWHEEL COUPLING (includes items 50 & 51)

NOTE: ONLY ITEMS WITH PART NUMBERS ARE AVAILABLE FOR SERVICE.

** Added items 71 & 72.*

ENGINE & ATTACHING PARTS
(9112-5099) Engine Left Side View

Starting Serial No. 0488238
Original Issue 8-97
Revised 9-29-99

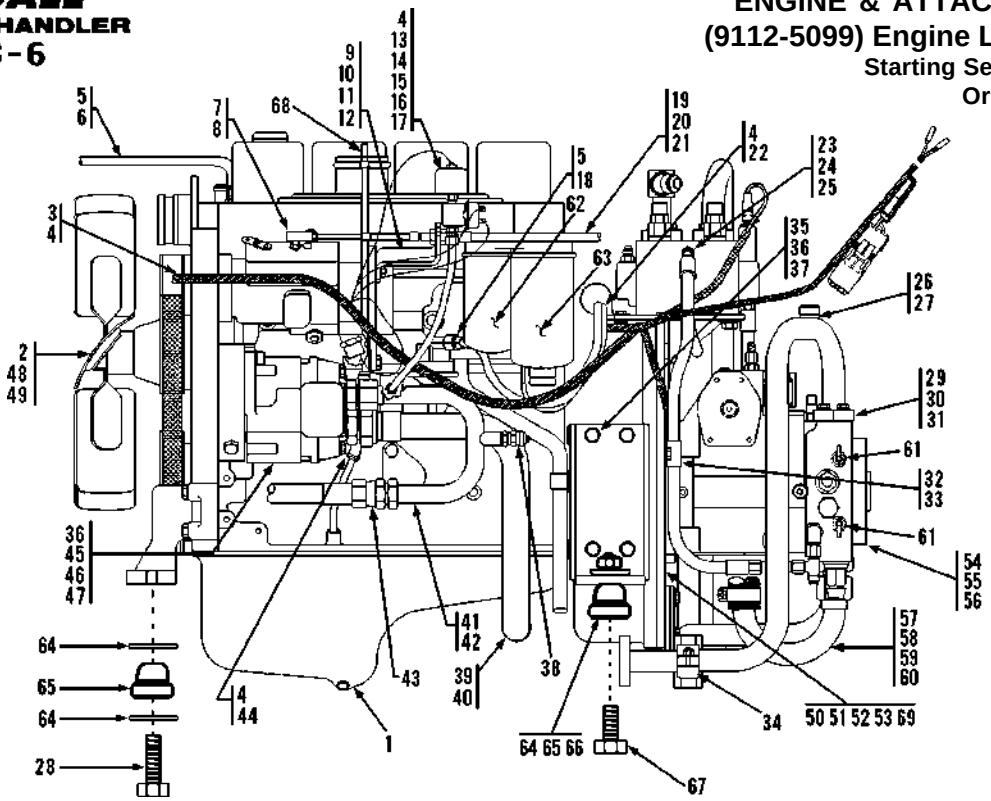

Item	Part No.	Qty.	Description Of Part
	9112-5099	Ref	ENGINE ASSY(includes items on pages 5-3 and 5-4)
1	9108-3012	1	CUMMINS ENGINE
2	9130-3056	1	FAN ASSY
3	9112-3166	1	WIRING HARNESS(engine)
4	9002-7187	6	TY-RAP
5		78"	FUEL LINE HOSE, 5/16
6	8688-3106	2	HOSE CLAMP
7	9002-7908	1	BALL JOINT
8	8850-1613	1	HEX NUT, #10-32
9	9108-1243	1	THROTTLE CABLE BRACKET
10	8820-1005	2	HEX HD CAPSCREW, 1/4-20X1,GR5
11	8855-1009	2	LOCKWASHER, 1/4
12	8850-1616	2	HEX NUT 1/4-20
13	2474-1047	1	PRESSURE SWITCH
14	9114-3315	1	OIL PRESSURE SENDER
15	9108-1388	1	TAPPED BAR
16	8688-3075	2	TUBE FITTING
17		18"	NYLON TUBE, 3/8
18	9003-0271	1	HOSE NIPPLE
19	9108-3404	1	THROTTLE CABLE
20	9002-8977	1	YOKE END
21	9002-1552	1	CLEVIS PIN
22		56"	FUEL LINE HOSE, 7/32
23	9108-3306	1	CONNECTOR
24	7713-3447	1	HOSE ASSY
25	8859-1206	1	O-RING
26	9114-3055	1	TUBE ASSY
27	9108-3106	1	O-RING
28	9108-3338	1	HEX HD CAPSCREW, M16X2X120
29	8471-2738	2	SPLIT FLANGE CLAMP
30	8320-1135	4	HEX HD CAPSCREW, 7/16-14X1-1/2
31	8855-1012	4	LOCKWASHER, 7/16
32	8594-1017	1	SUPPORT CLAMP
33	8856-1109	1	WASHER, 3/8
34	9020-5792	1	CUSHION CLAMP
35	9108-6034	2	REAR ENGINE MOUNTING BRACKET
36	8319-1010	10	LOCKWASHER, M12
37	8319-1032	8	HEX HD CAPSCREW M12X1.75X35
38	7713-3089	1	TEST FITTING
39	9108-3144	1	SUCTION TUBE
40	8866-2011	1	CONNECTOR (includes o-ring)
	8859-1210	1	O-RING

Item	Part No.	Qty.	Description Of Part
41	9108-3233	1	TUBE ASSY
42	8866-2010	1	CONNECTOR (includes o-ring)
	8859-1210	1	O-RING
43	8471-7907	1	HOSE ASSY
44	9108-3493	10"	SPLIT FLEX LOOM, 1/2 ID
45		Ref	MAIN PUMP (see page 10-17 for details
46	8319-1057	2	SOCKET HD CAPSCREW, M12x1.75x80
47	9002-7471	2	HARDENED WASHER
48	8319-1041	4	HEX HD CAPSCREW, M8 x 1.25 x 70
49	8856-1108	4	WASHER, 5/16
50	9108-4311	1	FLEX PLATE
51	9108-4312	1	COUPLER (bolts included)
52	8821-1068	8	SOCKET HD CAPSCREW, 3/8-16X5/8 (torque to 40-45 ft.lbs.)
53	8855-1011	8	LOCKWASHER, 3/8
54		Ref	HYDROSTATIC TRANSMISSION (see page 10-18 for details)
55	8820-1112	2	HEX HD CAPSCREW, 3/4-10X2-1/4, (torque to 240-265 ft.lbs.)
56	8855-1016	2	LOCKWASHER, 3/4
57	8866-2011	1	CONNECTOR (includes o-ring)
	8859-1210	1	O-RING
58	9114-3087	1	INTAKE TUBE
59	9108-3246	1	HOSE
60	9002-8695	2	BAND CLAMP
61	9105-3020	2	TEST COUPLING
62	7738-3202	1	PRIMARY FUEL FILTER
63	7738-3203	1	SECONDARY FUEL FILTER
64	9108-1158	4	SPECIAL WASHER
65	8688-1227	3	LORD MOUNT
66	8852-1010	2	LOCKNUT, 5/8-11
67	8820-1106	2	HEX HD CAPSCREW, 5/8-11X4-1/2, GR5
*68	9112-4125	1	DIPSTICK
*69	9108-3019	1	PUMP MOUNT & FLYWHEEL COUPLING (includes items 50 & 51)

NOTE: ONLY ITEMS WITH PART NUMBERS ARE AVAILABLE FOR SERVICE.

** Added items 68 & 69.*

(9132-5031) Engine Left Side View (534C-6 TURBO)

Starting Serial No. 0488238
Original Issue 10-97
Revised 9-29-99

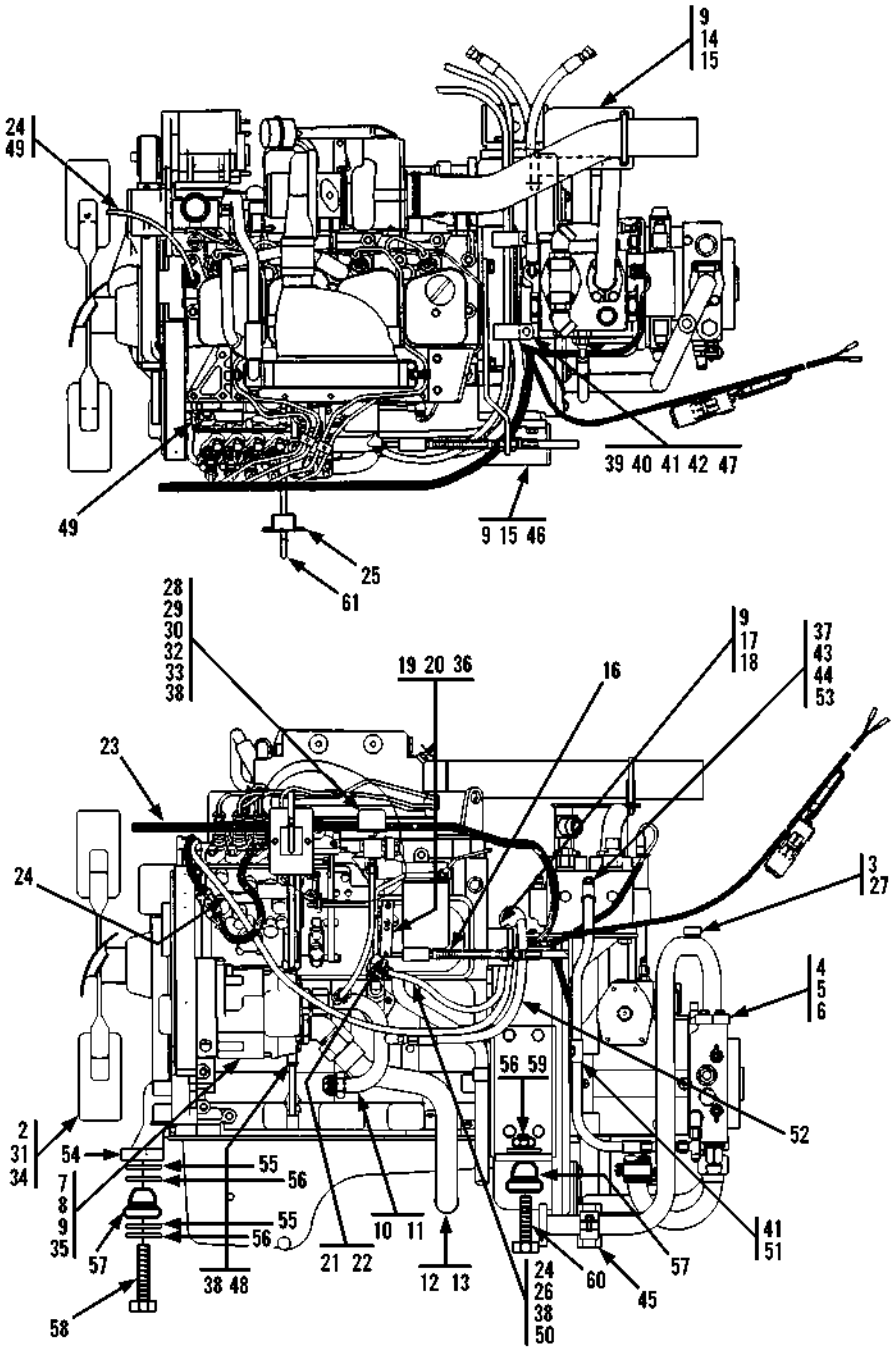

Item	Part No.	Qty.	Description Of Part
	9137-5002	1	CUMMINS ENGINE FILTER KIT, (includes all items)
	9108-4001	1	OIL FILTER
*	7738-3303	1	FUEL FILTER
	9108-3218	1	FUEL FILTER
	9020-6262	1	AIR FILTER ELEMENT

** Corrected part number on 7738-3303 fuel filter and added item 61 .*

ENGINE & ATTACHING PARTS
(9132-5031) Engine Left Side View (534C-6 TURBO)

Starting Serial No. 0488238
Original Issue 10-97
Revised 9-29-99

Item	Part No.	Qty.	Description Of Part
	9132-5031	Ref	ENGINE ASSY(includes items on pages 5-3 and 5-4)
1		1	CUMMINS B3.9 C-110-EPA ENGINE
2	9114-3329	1	FAN ASSY
3	9116-3122	1	TUBE ASSY
4	8471-2738	2	SPLIT FLANGE CLAMP
5	8320-1135	4	HEX HD CAPSCREW, 7/16-14X1-1/2
6	8855-1012	4	LOCKWASHER, 7/16
7		Ref	MAIN PUMP (see page 10-17 for details)
8	8319-1057	2	HEX HD CAPSCREW, M12X1.75X80
9	8319-1010	12	LOCKWASHER, M12
10	9132-3023	1	TUBE ASSY
11	8866-2010	1	CONNECTOR (includes o-ring)
	8859-1209	1	O-RING
12	9132-3022	1	SUCTION TUBE
13	8866-2090	1	ELBOW, 45 DEGREES (includes o-ring)
	8859-1210	1	O-RING
14	9132-6006	1	R.H. ENGINE MOUNT
15	8319-1032	8	HEX HD CAPSCREW, M12X1.75X35
16	9116-3260	1	ACCELERATOR CABLE
17	9116-1313	1	THROTTLE CABLE BRACKET
18	8319-1004	2	HEX HD CAPSCREW, M12-1.75X30
19	8319-1012	2	LOCKWASHER, M12
20	8319-1035	2	SOCKET HD CAPSCREW, M6X1.00X16
21	9114-3345	1	BALL SOCKET
22	9114-3344	1	OVER TRAVEL
23	9114-3302	1	WIRING HARNESS
24		157"	FUEL LINE HOSE, 5/16
25	9114-6101	1	DIPSTICK WELDMENT
26	9003-0271	1	HOSE NIPPLE
27	9108-3106	1	O-RING
28	2474-1047	1	PRESSURE SWITCH
29	9114-3315	1	OIL PRESSURE SENDER
30	9108-1388	1	TAPPED BAR
31	8319-1041	4	HEX HD CAPSCREW, M8X1.25X70
32	8688-3075	2	TUBE FITTING
33		28"	NYLON TUBE, 3/8
34	8856-1108	4	WASHER, 5/16
35	9002-7471	2	HARDENED WASHER
36	9116-1310	1	THROTTLE BAR
37	8859-1206	1	O-RING
38	9002-7187	5	TY-RAP
39	8820-1020	2	HEX HD CAPSCREW, 5/16-18X1, GR5
40	2486-1170	2	SUPPORT CLAMP
41	8594-1017	3	SUPPORT CLAMP
42	8850-1005	2	HEX NUT, 5/16-18
43	7713-3447	1	HOSE ASSY
44	9108-3306	1	CONNECTOR (includes item 37)
45	9020-5792	1	CUSHION CLAMP
46	9108-6034	1	L.H. ENGINE MOUNT
47	8855-1010	2	LOCKWASHER, 5/16
48		10"	SPLIT FLEX LOOM, 1/2 I.D.
49	8688-3106	3	HOSE CLAMP
50	8698-3649	1	ELBOW, 90 DEGREES, 1/4 PIPE
51	8856-1109	1	STANDARD WASHER
52	8471-9047	1	HOSE ASSY
53	8866-2239	1	SWIVEL NUT RUN TEE, 3/8 TUBE
54	9132-1013	1	SPACER
55	9132-1014	2	REBOUND WASHER
56	9108-1158	4	SPECIAL WASHER
57	8688-1227	3	SHOCK MOUNT
58	9132-3006	1	HEX HD CAPSCREW, M12X120
59	8852-1010	2	LOCKNUT, 5/8-11
60	8820-1106	2	HEX HD CAPSCREW, 5/8-11X4-1/2, GR5
*61	9112-4125	1	DIPSTICK
			NOTE: ONLY ITEMS WITH PART NUMBERS ARE AVAILABLE FOR SERVICE.

** Corrected part number on 7738-3303 fuel filter and added item 61.*

ENGINE & ATTACHING PARTS
Engine Right Side View (534C-6)

Starting Serial No. 0188002
Original Issue 1-90
Revised 9-19-95

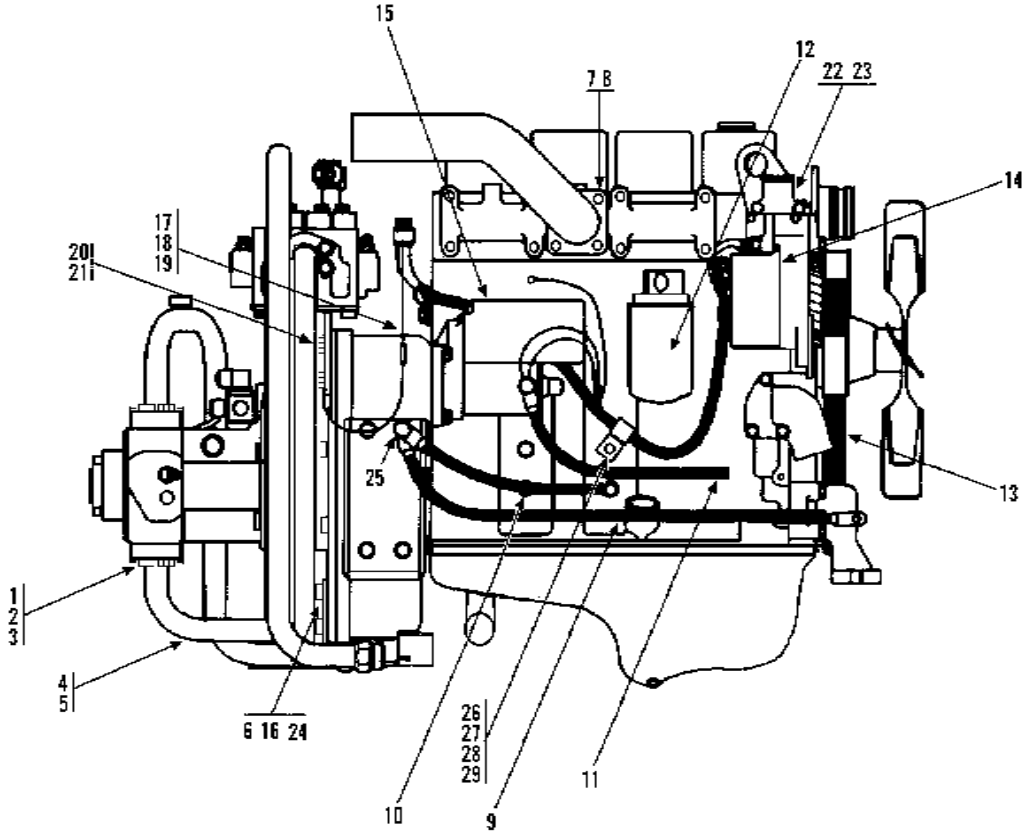

Item	Part No.	Qty.	Description Of Part
	9108-5053	1	CUMMINS ENGINE FILTER KIT, (includes all items)
	9108-4001	1	OIL FILTER
	7738-3202	1	PRIMARY FUEL, FILTER ELEMENT
	7738-3203	1	SECONDARY FUEL, FILTER ELEMENT
	9108-3218	1	FUEL FILTER
	9020-6262	1	AIR FILTER ELEMENT

Item	Part No.	Qty.	Description Of Part
1	8471-2738	2	SPLIT FLANGE CLAMP
2	8320-1135	4	HEX HD CAPSCREW, 7/16-14X1-1/2, GR8
3	8855-1012	4	LOCKWASHER, 7/16
4	9109-3001	1	TUBE ASSY
5	9108-3106	1	O-RING
6	9108-1285	1	TUBE SUPPORT
7	8319-1021	4	HEX HD CAPSCREW, M10X1.5X30
8	8319-1013	4	LOCKWASHER M10
9	9108-3115	1	NEG. GROUND CABLE
10	9108-3113	1	NEG. BATTERY CABLE
11	9108-3114	1	POS. BATTERY CABLE
12	9108-4001	1	OIL FILTER ELEMENT
13	9108-4162	1	FAN/ALT. BELT
14	9108-4002	1	ALTERNATOR

Item	Part No.	Qty.	Description Of Part
15	9108-4003	1	STARTER
16	8319-1006	4	HEX HD CAPSCREW, M10X1.5X40
17	8668-3480	1	BUTT CONNECTOR
18	8688-3260	1	3/8 EYELET
19			WIRE, #16 RED
20	8319-1021	8	HEX HD CAPSCREW, M10X1.5X30
21	8319-1013	8	LOCKWASHER, M10
22	9020-6124	1	WATER TEMP, SENDER
23	8871-1384	1	REDUCING BUSHING, 1/2X1/4
24	8856-1109	4	FLAT WASHER, 3/8
25	8319-1032	1	HEX HD CAPSCREW, M12X1.75X35
26	8319-1004	1	HEX HD CAPSCREW, M12X1.75X30
27	8319-1010	1	LOCKWASHER, M12
28	8856-1111	1	FLAT WASHER, 1/2
29	8584-1150	1	SUPPORT CLAMP

** Changed upper left corner to designate model more clearly.*

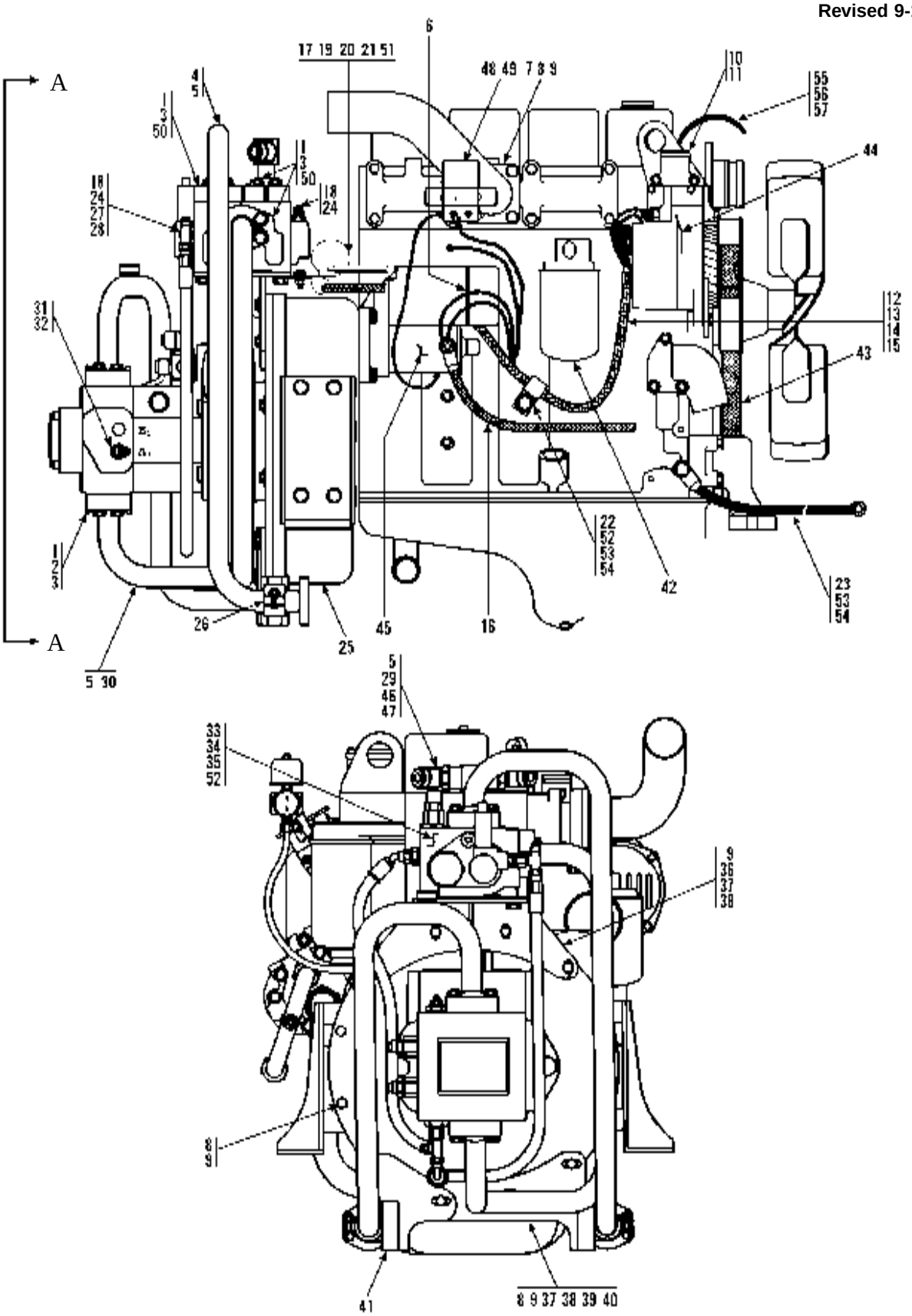

VIEW A - A

PCN 950279
950338
950428-KG

** Starting Serial Number 0288251 is incorrect - should be 0188251. Changed part numbers on items 19, 20, 21, 36 & 44, changed qty on items 2 & 5. Added items 50 thru 57.*

ENGINE & ATTACHING PARTS
(9112-5026) Engine Right Side View (534C-6)

Starting Serial No. 0188251
Original Issue 7-93
Revised 9-19-95

Item	Part No.	Qty.	Description Of Part
	9108-5053	Ref	CUMMINS ENGINE FILTER KIT, (includes all items)
	9108-4001	1	OIL FILTER
	7738-3202	1	PRIMARY FUEL FILTER ELEMENT
	7738-3203	1	SECONDARY FUEL FILTER ELEMENT
	9108-3218	1	FUEL FILTER
	9020-6262	1	AIR FILTER ELEMENT

Item	Part No.	Qty.	Description Of Part
	9112-5026	Ref	ENGINE ASSY (includes all items on pages 5-3 & 5-4)
1	8471-2738	8	SPLIT FLANGE CLAMP
* 2	8320-1135	4	HEX HD CAPSCREW, 7/16-14X1-1/2, GR8
3	8855-1012	16	LOCKWASHER, 7/16
4	9108-3418	1	TUBE ASSY
* 5	9108-3106	4	O-RING
6	9002-7187	1	TY-RAP
7	9108-6055	1	EXHAUST TUBING
8	8319-1021	9	HEX HD CAPSCREW, M10X1.5X30
9	8319-1013	16	LOCKWASHER, M10
10	9020-6124	1	WATER TEMPERATURE SENDER
11	8871-1384	1	REDUCING BUSHING, 1/2X1/4
12	8319-1007	1	HEX HD CAPSCREW, M8X1.25X16
13	8594-1016	1	SUPPORT CLAMP
14	8856-1108	1	FLAT WASHER, 5/16
15	8319-1011	1	LOCKWASHER, M8
16	9114-3099	1	POSITIVE BATTERY CABLE
17	9002-8660	2	SUPPORT CLAMP
18	8866-2005	2	CONNECTOR (includes item 24)
*19	8820-1020	2	HEX HD CAPSCREW, 5/16-18x1, GR5
*20	8855-1010	2	LOCKWASHER, 5/16
*21	8850-1005	2	HEX NUT, 5/16-18
22	8584-1150	1	SUPPORT CLAMP, 1-1/16
23	9114-3124	1	NEGATIVE BATTERY CABLE
24	8859-1204	2	O-RING
25	8871-1284	1	PIPE PLUG, 3/4
26	9020-5792	1	CUSHION CLAMP
27	8866-2224	1	SWIVEL NUT BRANCH TEE
28	8471-8221	1	HOSE ASSY
29	9108-3266	1	TUBE ASSY

Item	Part No.	Qty.	Description Of Part
30	9108-3095	1	TUBE ASSY
31	8866-2018	1	STRAIGHT THREAD CONNECTOR
32	8866-2119	1	ELBOW, 45 DEGREES (swivel nut)
33		Ref	TRACTION LOCK VALVE (see page 10-25, S/N 0288568 for details)
34	8820-1066	2	HEX HD CAPSCREW, 1/2-13X1-1/4, GR5
35	8855-1013	2	LOCKWASHER, 1/2
*36	9114-6058	1	FLOW DIVIDER BRACKET
37	8319-1006	5	HEX HD CAPSCREW, M10X1.50X40
38	8856-1109	7	FLAT WASHER, 3/8
39	9108-6130	1	TUBE SUPPORT
40	8319-1005	2	HEX HD CAPSCREW, M10X1.5X45
41	9108-6131	1	TUBE SUPPORT
42	9108-4001	1	OIL FILTER
43	9108-4162	1	FAN/ALTERNATOR BELT
*44	9108-3503	1	ALTERNATOR
	9108-3504	1	REGULATOR (supplied with alternator)
45	9108-3456	1	STARTER
46	8866-2421	2	ELBOW, 45 DEGREES (includes item 47)
47	8859-1207	2	O-RING
48	9040-2427	1	STARTER SOLENOID
49	9020-5205	1	JUMPER WIRE
*50	8320-1155	12	HEX HD CAPSCREW, 7/16-14X1-3/4, GR5
*51	2486-1170	2	SUPPORT CLAMP
*52	8856-1111	3	WASHER, 1/2
*53	8319-1004	2	HEX HD CAPSCREW, M12X1.75X30
*54	8319-1010	2	LOCKWASHER, M12
*55		18"	DEAERATION HOSE, 5/16"
*56	9003-0271	1	HOSE BARB
*57	8688-3106	2	HOSE CLAMP

PCN 950279
950338
950428-KG

** Starting Serial Number 0288251 is incorrect - should be 0188251. Changed part numbers on items 19, 20, 21, 36 & 44, changed qty on items 2 & 5. Added items 50 thru 57.*

ENGINE & ATTACHING PARTS
(9112-5049) Engine Right Side View
Starting Serial No. 0388256
Original Issue 5-96

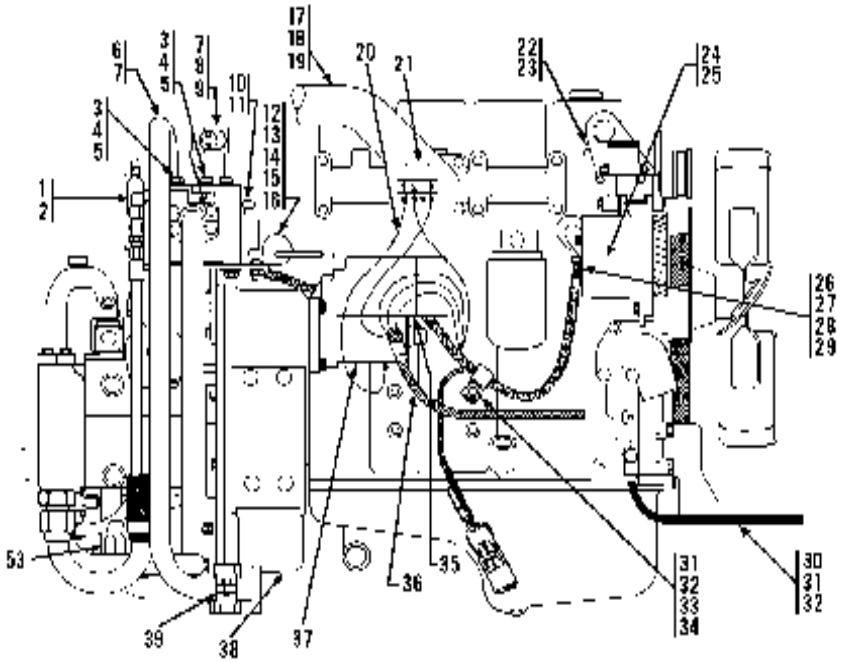

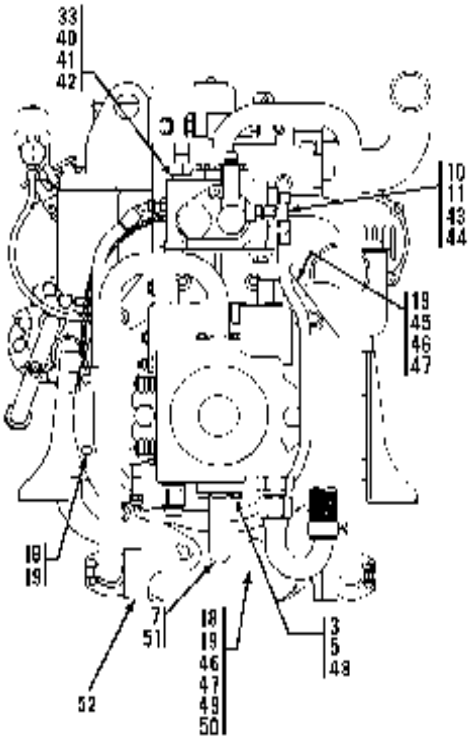

Item	Part No.	Qty.	Description Of Part
	9108-5053	1	CUMMINS ENGINE FILTER KIT, (includes all items)
	9108-4001	1	OIL FILTER ELEMENT
	7738-3202	1	PRIMARY FUEL, FILTER ELEMENT
	7738-3203	1	SECONDARY FUEL, FILTER ELEMENT
	9108-3218	1	FUEL FILTER
	9020-6262	1	AIR FILTER ELEMENT

ENGINE & ATTACHING PARTS
(9112-5049) Engine Right Side View
Starting Serial No. 0388256
Original Issue 5-96

Item	Part No.	Qty.	Description Of Part
	9112-5049	Ref	ENGINE ASSY(includes items on pages 5-3 and 5-4)
1	8866-2105	1	ELBOW, 90 DEGREES(swivel nut)
2	8471-8208	1	HOSE ASSY
3	8471-2738	8	SPLIT FLANGE CLAMP
4	8320-1155	12	HEX HD CAPSCREW, 7/16-14 x 1-3/4
5	8855-1012	16	LOCKWASHER, 7/16
6	9108-3418	1	TUBE ASSY
7	9108-3106	4	O-RING
8	9108-3266	1	TUBE ASSY
9	8866-2421	2	CONNECTOR , 45 DEGREES (includes o-ring)
	8859-1207	2	O-RING
10	8866-2005	2	CONNECTOR (includes item 11)
11	8859-1204	2	O-RING
12	9002-8660	2	SUPPORT CLAMP
13	8850-1005	2	HEX NUT, 5/16-18
14	2486-1170	2	SUPPORT CLAMP
15	8820-1020	2	HEX HD CAPSCREW, 5/16-18 x 1
16	8855-1010	2	LOCKWASHER, 5/16
17	9108-6055	1	EXHAUST TUBING
18	8319-1021	9	HEX HD CAPSCREW, M10 x 1.5 x 30
19	8319-1013	16	LOCKWASHER, M10
20	9020-5205	1	JUMPER WIRE
21	9040-2427	1	STARTER SOLENOID
22	9020-6124	1	WATER TEMP SENDER
23	8871-1384	1	REDUCER BUSHING
24	9108-3503	1	ALTERNATOR (includes item 25)
25	9108-3504	1	REGULATOR
26	8594-1016	1	SUPPORT CLAMP

Item	Part No.	Qty.	Description Of Part
27	8319-1007	1	HEX HD CAPSCREW, M8 x 1.25 x 16
28	8856-1108	1	WASHER, 5/16
29	8319-1011	1	LOCKWASHER, M8
30	9114-3124	1	NEGATIVE BATTERY CABLE
31	8319-1004	2	HEX HD CAPSCREW, M12 x 1.75 x 30
32	8319-1010	2	LOCKWASHER, M12
33	8856-1111	3	WASHER, 1/2
34	9114-3122	1	SUPPORT CLAMP, 5/8
35	9002-7187	1	TY-RAP
36	9114-3099	1	POSITIVE BATTERY CABLE
37	9108-3456	1	STARTER
38	8871-1284	1	PIPE PLUG, 3/4
39	9020-5792	1	CUSHION CLAMP
40		Ref	TRACTION LOCK VALVE (see page 10-25 for details)
41	8820-1066	2	HEX HD CAPSCREW, 1/2-13 x 1-1/4
42	8855-1013	2	LOCKWASHER, 1/2
43	8866-2224	1	SWIVEL NUT BRANCH TEE
44	8471-8221	1	HOSE ASSY
45	9114-6058	1	FLOW DIVIDER BRACKET
46	8319-1006	5	HEX HD CAPSCREW, M10 x 1.5 x 40
47	8856-1109	7	WASHER, 3/8
48	8320-1135	4	HEX HD CAPSCREW, 7/16-14 x 1-1/2
49	9108-6130	1	TUBE SUPPORT
50	8319-1005	2	HEX HD CAPSCREW, M10 x 1.5 x 45
51	9116-3201	1	TUBE ASSY
52	9108-6131	1	TUBE SUPPORT
53	8866-2064	1	ELBOW, 90 DEGREES (includes o-ring)
	8859-1209	1	O-RING

ENGINE & ATTACHING PARTS
(9112-5099) Engine Right Side View
Starting Serial No. 0488238
Original Issue 8-97

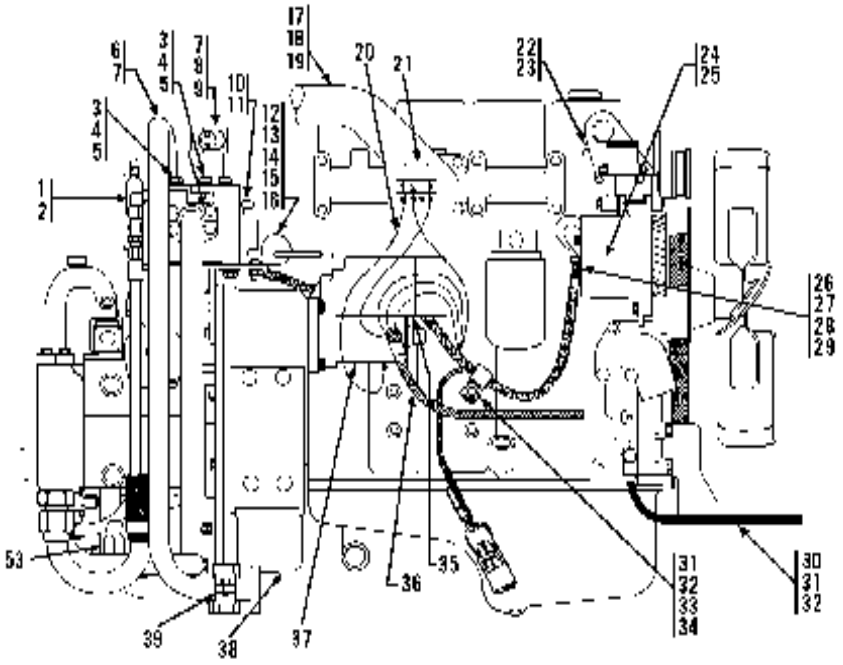

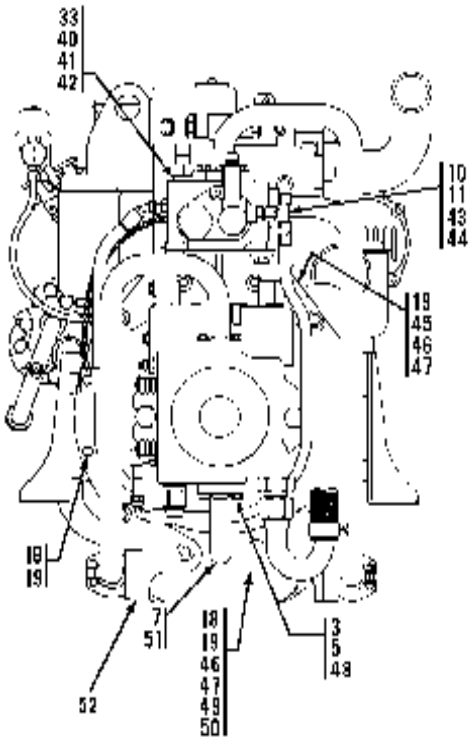

Item	Part No.	Qty.	Description Of Part
	9108-5053	1	CUMMINS ENGINE FILTER KIT, (includes all items)
	9108-4001	1	OIL FILTER ELEMENT
	7738-3202	1	PRIMARY FUEL, FILTER ELEMENT
	7738-3203	1	SECONDARY FUEL, FILTER ELEMENT
	9108-3218	1	FUEL FILTER
	9020-6262	1	AIR FILTER ELEMENT

ENGINE & ATTACHING PARTS
(9112-5099) Engine Right Side View
Starting Serial No. 0488238
Original Issue 8-97

Item	Part No.	Qty.	Description Of Part
	9112-5099	Ref	ENGINE ASSY (includes items on pages 5-3 and 5-4)
1	8866-2105	1	ELBOW, 90 DEGREES (swivel nut)
2	8471-8208	1	HOSE ASSY
3	8471-2738	8	SPLIT FLANGE CLAMP
4	8320-1155	12	HEX HD CAPSCREW, 7/16-14 X1-3/4
5	8855-1012	16	LOCKWASHER, 7/16
6	9108-3418	1	TUBE ASSY
7	9108-3106	4	O-RING
8	9108-3266	1	TUBE ASSY
9	8866-2421	2	CONNECTOR , 45 DEGREES (includes o-ring)
	8859-1207	2	O-RING
10	8866-2005	2	CONNECTOR (includes item 11)
11	8859-1204	2	O-RING
12	9002-8660	2	SUPPORT CLAMP
13	8850-1005	2	HEX NUT, 5/16-18
14	2486-1170	2	SUPPORT CLAMP
15	8820-1020	2	HEX HD CAPSCREW, 5/16-18X1
16	8855-1010	2	LOCKWASHER, 5/16
17	9108-6055	1	EXHAUST TUBING
18	8319-1021	9	HEX HD CAPSCREW, M10X1.5X30
19	8319-1013	16	LOCKWASHER, M10
20	9020-5205	1	JUMPER WIRE
21	9040-2427	1	STARTER SOLENOID
22	9114-3314	1	WATER TEMP SENDER
23	8871-1384	1	REDUCER BUSHING
24	9108-3503	1	ALTERNATOR (includes item 25)
25	9108-3504	1	REGULATOR
26	8594-1016	1	SUPPORT CLAMP

Item	Part No.	Qty.	Description Of Part
27	8319-1007	1	HEX HD CAPSCREW, M8X1.25X16
28	8856-1108	1	WASHER, 5/16
29	8319-1011	1	LOCKWASHER, M8
30	9114-3124	1	NEGATIVE BATTERY CABLE
31	8319-1004	2	HEX HD CAPSCREW, M12X1.75X30
32	8319-1010	2	LOCKWASHER, M12
33	8856-1111	3	WASHER, 1/2
34	9114-3122	1	SUPPORT CLAMP, 5/8
35	9002-7187	1	TY-RAP
36	9114-3099	1	POSITIVE BATTERY CABLE
37	9108-3456	1	STARTER
38	8871-1284	1	PIPE PLUG, 3/4
39	9020-5792	1	CUSHION CLAMP
40		Ref	TRACTION LOCK VALVE (see page 10-25 for details)
41	8820-1066	2	HEX HD CAPSCREW, 1/2-13X1-1/4
42	8855-1013	2	LOCKWASHER, 1/2
43	8866-2224	1	SWIVEL NUT BRANCH TEE
44	8471-8221	1	HOSE ASSY
45	9114-6058	1	FLOW DIVIDER BRACKET
46	8319-1006	5	HEX HD CAPSCREW, M10X1.5X40
47	8856-1109	7	WASHER, 3/8
48	8320-1135	4	HEX HD CAPSCREW, 7/16-14X1-1/2
49	9108-6130	1	TUBE SUPPORT
50	8319-1005	2	HEX HD CAPSCREW, M10X1.5X45
51	9116-3201	1	TUBE ASSY
52	9108-6131	1	TUBE SUPPORT
53	8866-2064	1	ELBOW, 90 DEGREES (includes o-ring)
	8859-1209	1	O-RING

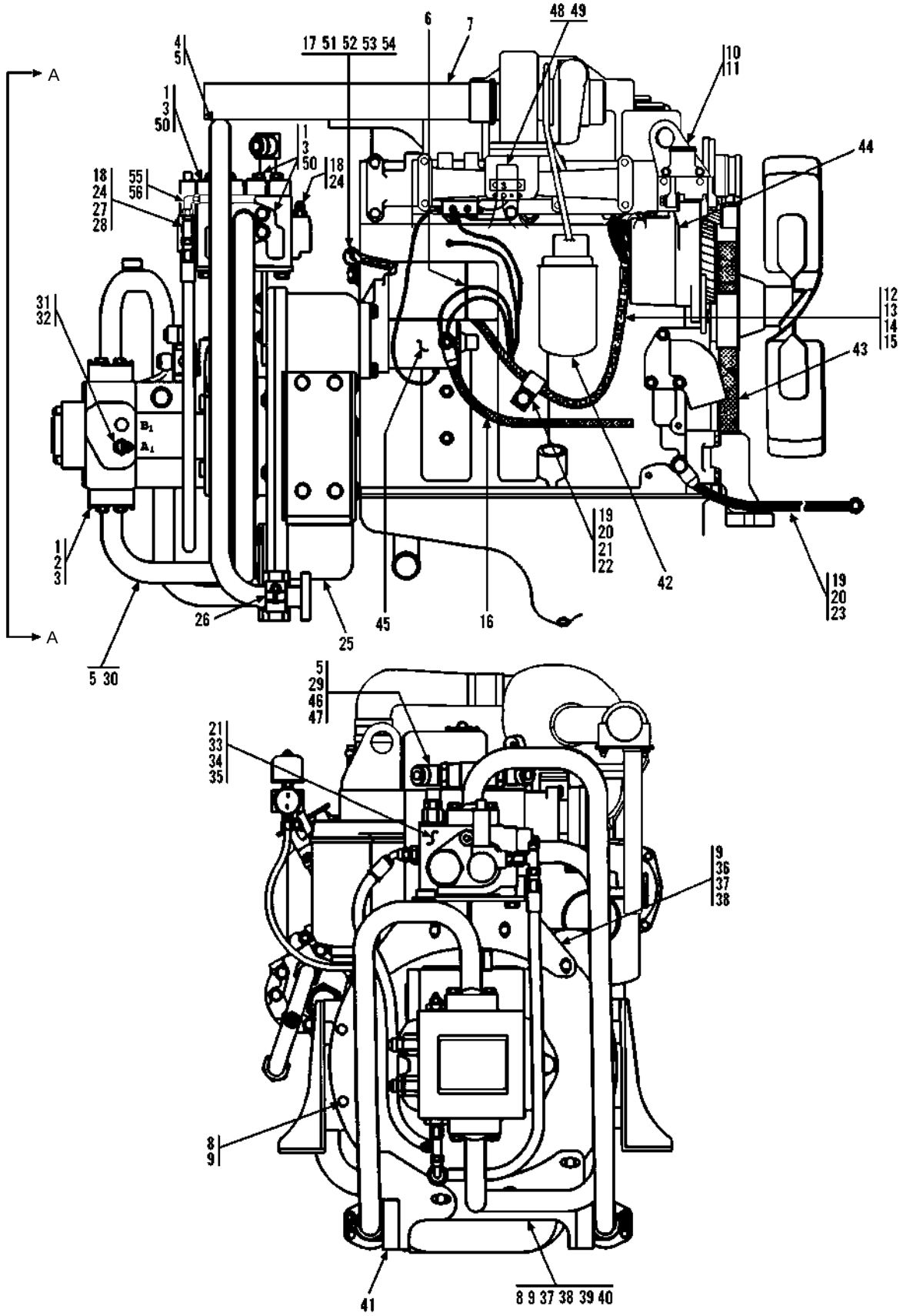

VIEW A - A

MPC-1463 KG

* *Added items 55 & 56.*

ENGINE & ATTACHING PARTS
(9132-5001) Engine Right Side View (534C-6 TURBO)

Starting Serial No. 0388043
Original Issue 7-95
Revised 10-6-95

Item	Part No.	Qty.	Description Of Part
	9108-5053	Ref	CUMMINS ENGINE FILTER KIT, (includes all items)
	9108-4001	1	OIL FILTER
	7738-3202	1	PRIMARY FUEL FILTER ELEMENT
	7738-3203	1	SECONDARY FUEL FILTER ELEMENT
	9108-3218	1	FUEL FILTER
	9020-6262	1	AIR FILTER ELEMENT

Item	Part No.	Qty.	Description Of Part
	9132-5001	Ref	ENGINE ASSY (includes all items except 44, 52 thru 55, 58 & 59, on page 5-3, plus all items on 5-4)
1	8471-2738	8	SPLIT FLANGE CLAMP
2	8320-1135	4	HEX HD CAPSCREW, 7/16-14X1-1/2, GR8
3	8855-1012	16	LOCKWASHER, 7/16
4	9108-3418	1	TUBE ASSY
5	9108-3106	4	O-RING
6	9002-7187	1	TY-RAP
7	9114-6037	1	EXHAUST TUBING
8	8319-1021	5	HEX HD CAPSCREW, M10X1.5X30
9	8319-1013	12	LOCKWASHER, M10
10	9020-6124	1	WATER TEMPERATURE SENDER
11	8871-1384	1	REDUCING BUSHING, 1/2X1/4
12	8319-1007	1	HEX HD CAPSCREW, M8X1.25X16
13	8594-1016	1	SUPPORT CLAMP
14	8856-1108	1	FLAT WASHER, 5/16
15	8319-1011	1	LOCKWASHER, M8
16	9114-3099	1	POSITIVE BATTERY CABLE
17	9002-8660	2	SUPPORT CLAMP
18	8866-2005	2	CONNECTOR (includes item 24)
19	8319-1004	2	HEX HD CAPSCREW, M12X1.75X30
20	8319-1010	2	LOCKWASHER, M12
21	8856-1111	3	FLAT WASHER, 1/2
22	8584-1150	1	SUPPORT CLAMP, 1-1/16
23	9114-3124	1	NEGATIVE BATTERY CABLE
24	8859-1204	2	O-RING
25	8871-1284	1	PIPE PLUG, 3/4
26	9020-5792	1	CUSHION CLAMP
27	8866-2224	1	SWIVEL NUT BRANCH TEE
28	8471-8221	1	HOSE ASSY

Item	Part No.	Qty.	Description Of Part
29	9108-3266	1	TUBE ASSY
30	9108-3095	1	TUBE ASSY
31	8866-2018	1	STRAIGHT THREAD CONNECTOR
32	8866-2119	1	ELBOW, 45 DEGREES (swivel nut)
33		Ref	TRACTION LOCK VALVE (see page 10-25 for details)
34	8820-1066	2	HEX HD CAPSCREW, 1/2-13X1-1/4, GR5
35	8855-1013	2	LOCKWASHER, 1/2
36	9114-6058	1	FLOW DIVIDER BRACKET
37	8319-1006	5	HEX HD CAPSCREW, M10X1.50X40
38	8856-1109	7	FLAT WASHER, 3/8
39	9108-6130	1	TUBE SUPPORT
40	8319-1005	2	HEX HD CAPSCREW, M10X1.5X45
41	9108-6131	1	TUBE SUPPORT
42	9108-4001	1	OIL FILTER
43	9108-4162	1	FAN/ALTERNATOR BELT
44	9108-3503	1	ALTERNATOR
	9108-3504	1	REGULATOR (supplied with alternator)
45	9108-3456	1	STARTER
46	8866-2421	2	ELBOW, 45 DEGREES (includes item 47)
47	8859-1207	2	O-RING
48	9040-2427	1	STARTER SOLENOID
49	9020-5205	1	JUMPER WIRE
50	8320-1155	12	HEX HD CAPSCREW, 7/16-14X1-3/4, GR8
51	2486-1170	2	SUPPORT CLAMP
52	8820-1020	2	HEX HD CAPSCREW, 5/16-18X1"
53	8855-1010	2	LOCKWASHER, 5/16
54	8850-1005	2	HEX NUT, 5/16-18
*55	8866-2105	1	ELBOW, 90 DEGREES (swivel nut)
*56	8471-8208	1	HOSE ASSY

** Added items 55 & 56.*

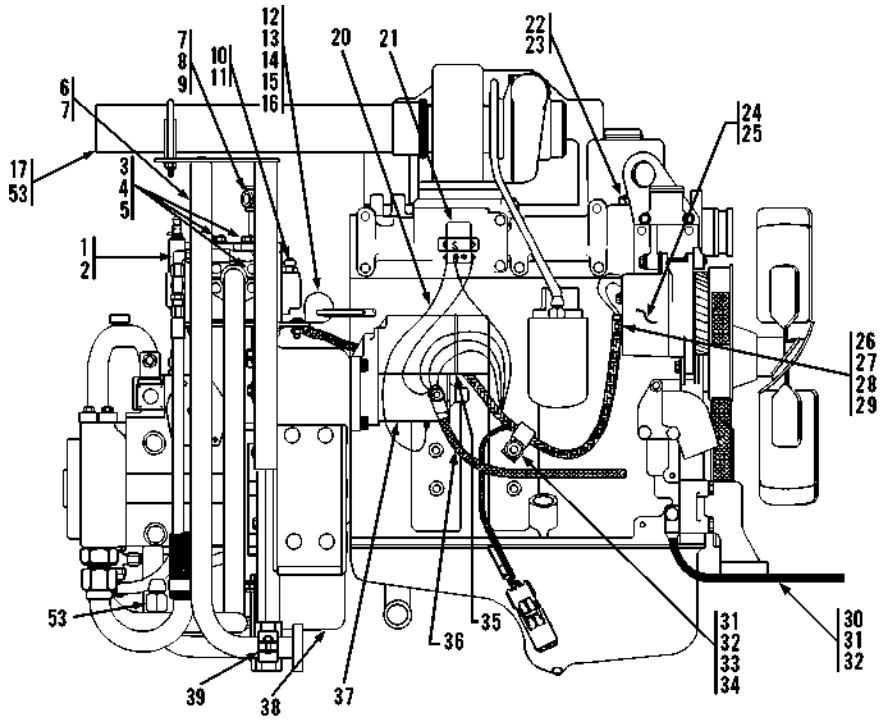

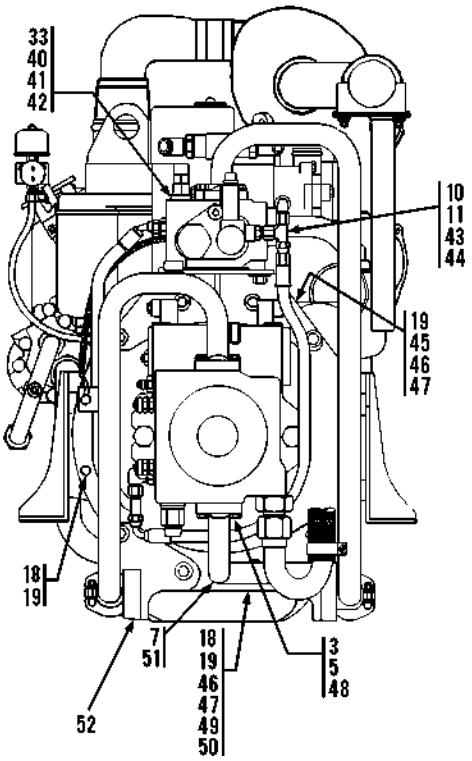

Item	Part No.	Qty.	Description Of Part
	9108-5053	Ref	CUMMINS ENGINE FILTER KIT, (includes all items)
	9108-4001	1	OIL FILTER
	7738-3202	1	PRIMARY FUEL FILTER ELEMENT
	7738-3203	1	SECONDARY FUEL FILTER ELEMENT
	9108-3218	1	FUEL FILTER
	9020-6262	1	AIR FILTER ELEMENT

** Changed part number on item 51.*

Item	Part No.	Qty.	Description Of Part
	9108-5053	Ref	CUMMINS ENGINE FILTER KIT, (includes all items)
	9108-4001	1	OIL FILTER
	7738-3202	1	PRIMARY FUEL FILTER ELEMENT
	7738-3203	1	SECONDARY FUEL FILTER ELEMENT
	9108-3218	1	FUEL FILTER
	9020-6262	1	AIR FILTER ELEMENT

Item	Part No.	Qty.	Description Of Part
	9132-5007	Ref	ENGINE ASSY(includes items on pages 5-3 and 5-4)
1	8866-2105	1	ELBOW, 90 DEGREES(swivel nut)
2	8471-8208	1	HOSE ASSY
3	8471-2738	8	SPLIT FLANGE CLAMP
4	8320-1155	12	HEX HD CAPSCREW, 7/16-14 x 1-3/4
5	8855-1012	16	LOCKWASHER, 7/16
6	9108-3418	1	TUBE ASSY
7	9108-3106	4	O-RING
8	9108-3266	1	TUBE ASSY
9	8866-2421	2	CONNECTOR , 45 DEGREES (includes o-ring)
	8859-1207	2	O-RING
10	8866-2005	2	CONNECTOR (includes item 11)
11	8859-1204	2	O-RING
12	9002-8660	2	SUPPORT CLAMP
13	8850-1005	2	HEX NUT, 5/16-18
14	2486-1170	2	SUPPORT CLAMP
15	8820-1020	2	HEX HD CAPSCREW, 5/16-18 x 1
16	8855-1010	2	LOCKWASHER, 5/16
17	9114-6037	1	EXHAUST TUBING
18	8319-1021	5	HEX HD CAPSCREW, M10 x 1.5 x 30
19	8319-1013	12	LOCKWASHER, M10
20	9020-5205	1	JUMPER WIRE
21	9040-2427	1	STARTER SOLENOID
22	9020-6124	1	WATER TEMP SENDER
23	8871-1384	1	REDUCER BUSHING
24	9108-3503	1	ALTERNATOR (includes item 25)
25	9108-3504	1	REGULATOR

Item	Part No.	Qty.	Description Of Part
26	8594-1016	1	SUPPORT CLAMP
27	8319-1007	1	HEX HD CAPSCREW, M8 x 1.25 x 16
28	8856-1108	1	WASHER, 5/16
29	8319-1011	1	LOCKWASHER, M8
30	9114-3124	1	NEGATIVE BATTERY CABLE
31	8319-1004	2	HEX HD CAPSCREW, M12 x 1.75 x 30
32	8319-1010	2	LOCKWASHER, M12
33	8856-1111	3	WASHER, 1/2
34	9114-3122	1	SUPPORT CLAMP, 5/8
35	9002-7187	1	TY-RAP
36	9114-3099	1	POSITIVE BATTERY CABLE
37	9108-3456	1	STARTER
38	8871-1284	1	PIPE PLUG, 3/4
39	9020-5792	1	CUSHION CLAMP
40		Ref	TRACTION LOCK VALVE (see page 10-25 for details)
41	8820-1066	2	HEX HD CAPSCREW, 1/2-13 x 1-1/4
42	8855-1013	2	LOCKWASHER, 1/2
43	8866-2224	1	SWIVEL NUT BRANCH TEE
44	8471-8221	1	HOSE ASSY
45	9114-6058	1	FLOW DIVIDER BRACKET
46	8319-1006	5	HEX HD CAPSCREW, M10 x 1.5 x 40
47	8856-1109	7	WASHER, 3/8
48	8320-1135	4	HEX HD CAPSCREW, 7/16-14 x 1-1/2
49	9108-6130	1	TUBE SUPPORT
50	8319-1005	2	HEX HD CAPSCREW, M10 x 1.5 x 45
*51	9116-3201	1	TUBE ASSY
52	9108-6131	1	TUBE SUPPORT
53	8368-3175	1	MUFFLER CLAMP

** Changed part number on item 51.*

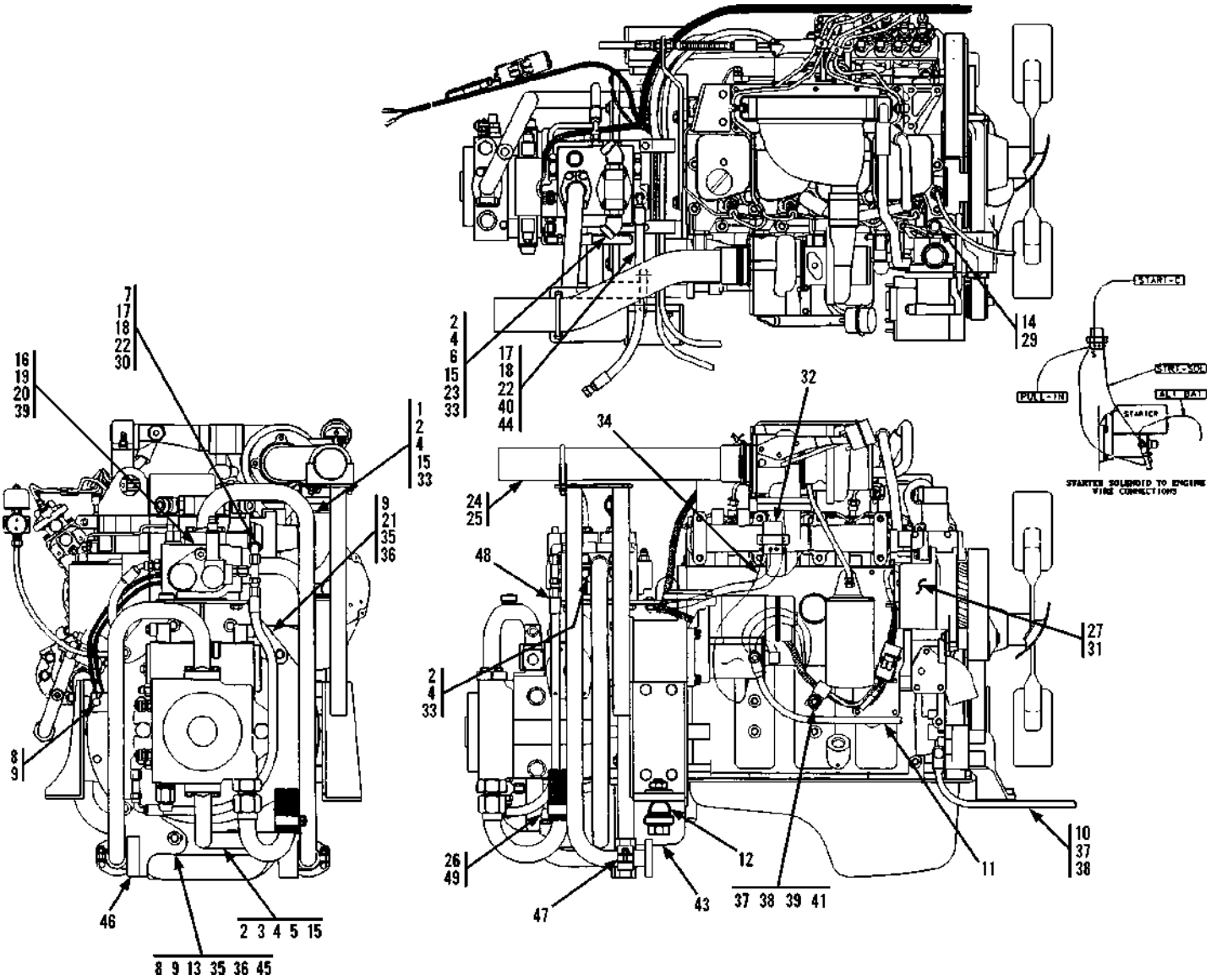

Item	Part No.	Qty.	Description Of Part
	9137-5002	1	CUMMINS ENGINE FILTER KIT, (includes all items)
	9108-4001	1	OIL FILTER
	7738-3203	1	FUEL FILTER
	9108-3218	1	FUEL FILTER
	9020-6262	1	AIR FILTER ELEMENT

Revised position of arrows on items 66 & 67 in art.

ENGINE & ATTACHING PARTS
(9132-5031) Engine Right Side View (534C-6 TURBO)

Starting Serial No. 0488238
Original Issue 10-97
Revised 6-29-99

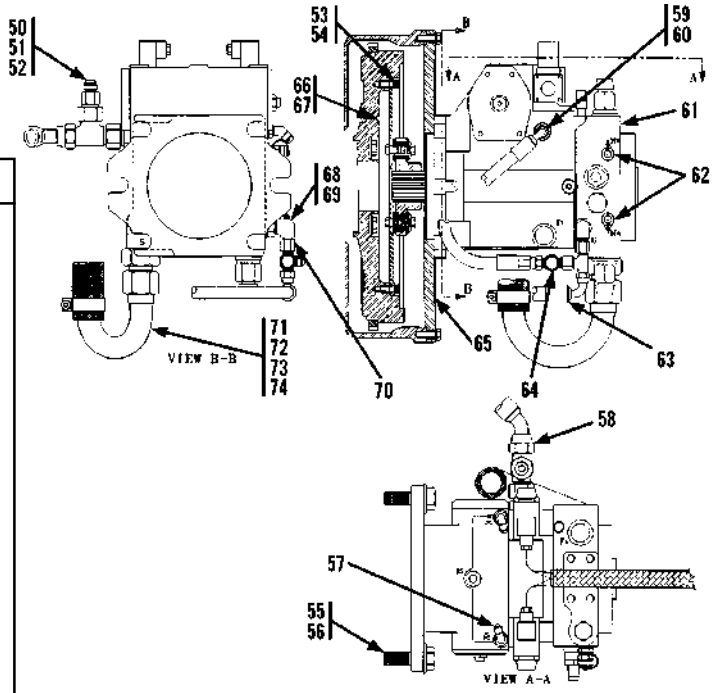

Item	Part No.	Qty.	Description Of Part
	9132-5031	Ref	ENGINE ASSY(includes items on pages 5-3 and 5-4)
1	9108-3418	1	TUBE ASSY
2	8471-2738	8	SPLIT FLANGE CLAMP
3	8320-1135	4	HEX HD CAPSCREW, 7/16-14X1-1/2
4	8855-1012	16	LOCKWASHER, 7/16
5	9116-3201	1	TUBE ASSY
6	9108-3266	1	TUBE ASSY
7	8866-2105	1	ELBOW, 90 DEGREES (swivel nut)
8	8319-1021	5	HEX HD CAPSCREW, M10X1.5X30
9	8319-1013	12	LOCKWASHER, M10
10	9114-3124	1	NEGATIVE BATTERY CABLE
11	9114-3099	1	POSITIVE BATTERY CABLE
12		Ref	ENGINE MOUNT (see page 5-3 for details)
13	9108-6130	1	TUBE SUPPORT
14	9114-3314	1	WATER TEMPERATURE SENDER
15	9108-3106	4	O-RING
16		Ref	TRACTION LOCK VALVE (see page 10-25 for details)
17	8866-2224	2	SWIVEL NUT BRANCH TEE, 3/8 TUBE
18	8866-2005	2	CONNECTOR (includes item 22)
19	8820-1066	2	HEX HD CAPSCREW, 1/2-13X1-1/4, GR5
20	8855-1013	2	LOCKWASHER, 1/2
21	9114-6058	1	FLOW DIVIDER BRACKET
22	8859-1204	2	O-RING
23	8866-2421	2	ELBOW, 45 DEGREES (includes o-ring)
	8859-1212	2	O-RING
24	9114-6037	1	EXHAUST TUBE
25	8368-3175	1	MUFFLER CLAMP
26	8859-1204	1	O-RING
27	9108-3503	1	ALTERNATOR
28	9108-3456	1	STARTER
29	8871-1385	1	REDUCER BUSHING
30	8471-8208	1	HOSE ASSY
31	9108-3504	1	REGULATOR
32	9040-2427	1	STARTER SOLENOID (relay), (mounts on frame)
	8855-1009	2	LOCKWASHER, 1/4
	8820-1003	2	HEX HD CAPSCREW, 1/4-20X3/4, GR5
33	8320-1155	12	HEX HD CAPSCREW, 7/16-14X1-3/4
34	9020-5205	1	JUMPER WIRE
35	8856-1109	7	WASHER, 3/8
36	8319-1006	5	HEX HD CAPSCREW, M10X1.5X40
37	8319-1004	2	HEX HD CAPSCREW, M12X1.75X30
38	8319-1010	2	LOCKWASHER, M12
39	8856-1111	3	WASHER, 1/2
40	8471-7930	2	HOSE ASSY
41	9114-3122	1	SUPPORT CLAMP, 5/8
42	9002-7187	1	TY-RAP
43	8871-1284	1	PIPE PLUG, 3/4
44	8859-1204	1	O-RING
45	8319-1005	2	HEX HD CAPSCREW, M10X1.5X45
46	9108-6131	1	TUBE SUPPORT

Item	Part No.	Qty.	Description Of Part
47	9020-5792	1	CUSHION CLAMP
48	8471-8221	1	HOSE ASSY
49	8866-2064	1	ELBOW, 90 DEGREES (includes item 26)
50	8866-2242	1	SWIVEL NUT RUN TEE, 3/4 TUBE
51	8365-1133	1	REDUCER W/ADAPTER
52	8866-2008	1	CONNECTOR (includes o-ring)
	8859-1207	1	O-RING
53	8821-1068	8	SOCKET HD CAPSCREW, 3/8-16XX5/8
54	8855-1011	4	LOCKWASHER, 3/8
55	8820-1112	2	HEX HD CAPSCREW, 3/4-10X2-1/4, GR5
56	9002-7473	2	HARDENED WASHER, 3/4
57	9002-7906	2	ELBOW, 90 DEGREES
58	8471-7839	1	HOSE ASSY
59	8866-2018	1	CONNECTOR (includes o-ring)
	8859-1205	1	O-RING
60	8471-7341	1	HOSE ASSY
61		Ref	HYDROSTATIC TRANS. PUMP (see page 10-18 for details)
62	9105-3020	2	TEST COUPLING
63	8471-7524	1	HOSE ASSY
64	8471-7852	1	HOSE ASSY
65	9108-3019	1	PUMP MOUNT & FLYWHEEL COUPLING (includes item 66 & 67)
66	9108-4311	1	FLEX PLATE
67	9108-4312	1	COUPLER (bolts included)
68	9108-3222	1	STRAIGHT THREAD REDUCING CONNECTOR (includes item 69)
69	8859-1207	1	O-RING
70	8866-2239	2	SWIVEL NUT RUN TEE, 3/8 TUBE
71	8866-2011	1	CONNECTOR (includes o-ring)
	8859-1210	1	O-RING
72	9114-3087	1	INTAKE TUBE
73	9108-3246	1	HOSE ASSY
74	9002-8695	2	BAND CLAMP

**Revised position of arrows on items 66 & 67 in art.*

ENGINE & ATTACHING PARTS

Fuel Tank& Lines

Starting Serial No. 0188002
Original Issue 1-90
Revised 9-19-95

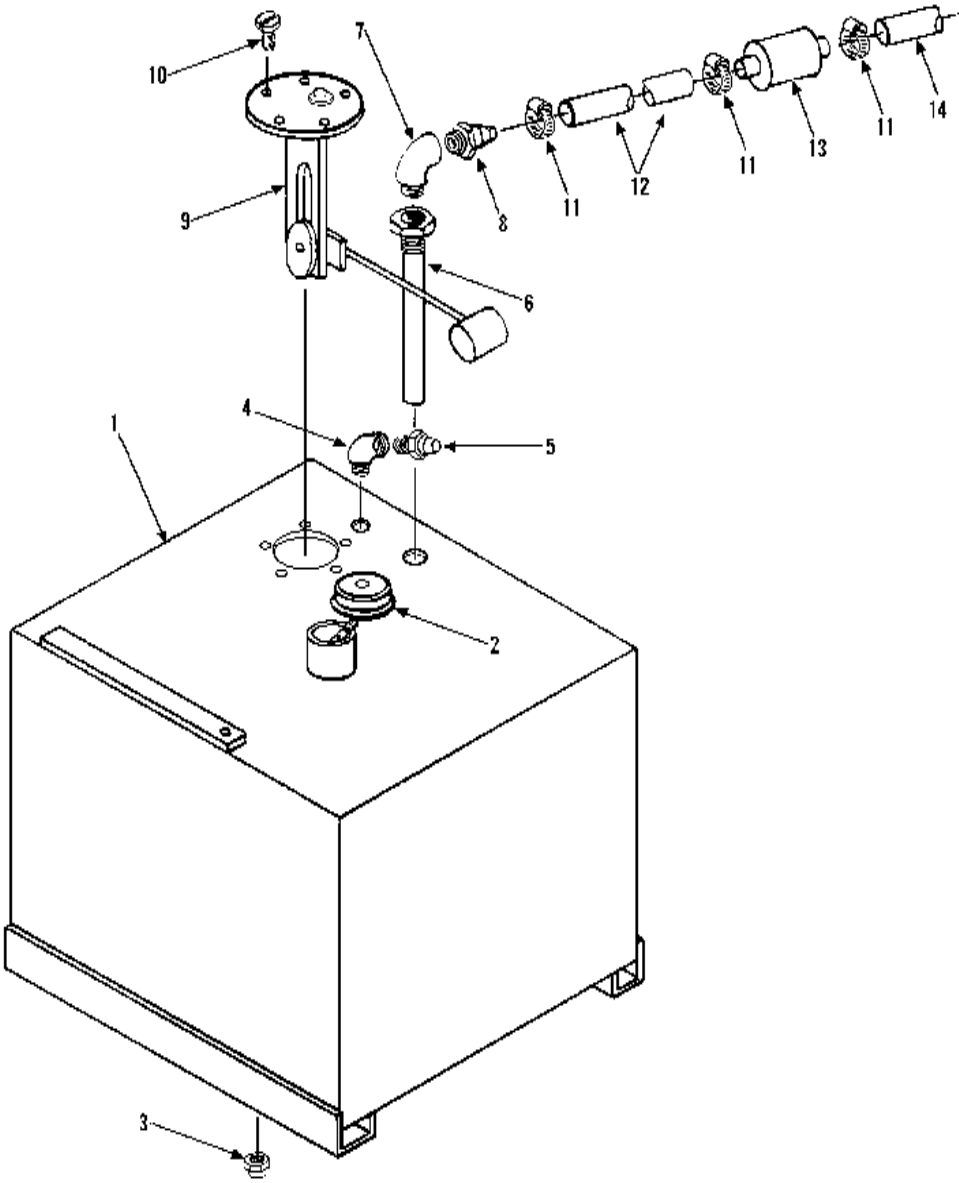

Item	Part No.	Qty.	Description Of Part
1	9108-3323	1	FUEL TANK (includes items 2 & 3)
2	8654-1381	1	FUEL TANK CAP, (w/chain)
3	8871-1283	1	HEX SOCKET PIPE PLUG, 1/2
4	8871-2011	1	STREET ELBOW, 90 DEGREES, 1/8
5	8874-1805	1	HOSE NIPPLE
6	7738-6065	1	PICK-UP TUBE
7	8871-2013	1	STREET ELBOW, 90 DEGREES, 3/8
8	9002-7331	1	HOSE NIPPLE
9	9040-0654	1	FUEL SENDER (includes item 10)
10		5	SCREW
11	8348-3497	3	HOSE CLAMP
12		11"	FUEL LINE HOSE, 5/16" I.D.
13	9108-3218	1	FUEL FILTER
14		56"	FUEL LINE HOSE, 5/16" I.D.

** Changed upper left corner to designate model more clearly.*

ENGINE & ATTACHING PARTS
(9108-5016) Fuel Tank & Lines

Starting Serial No. 0388012
Original Issue 7-95
Revised 6-22-01

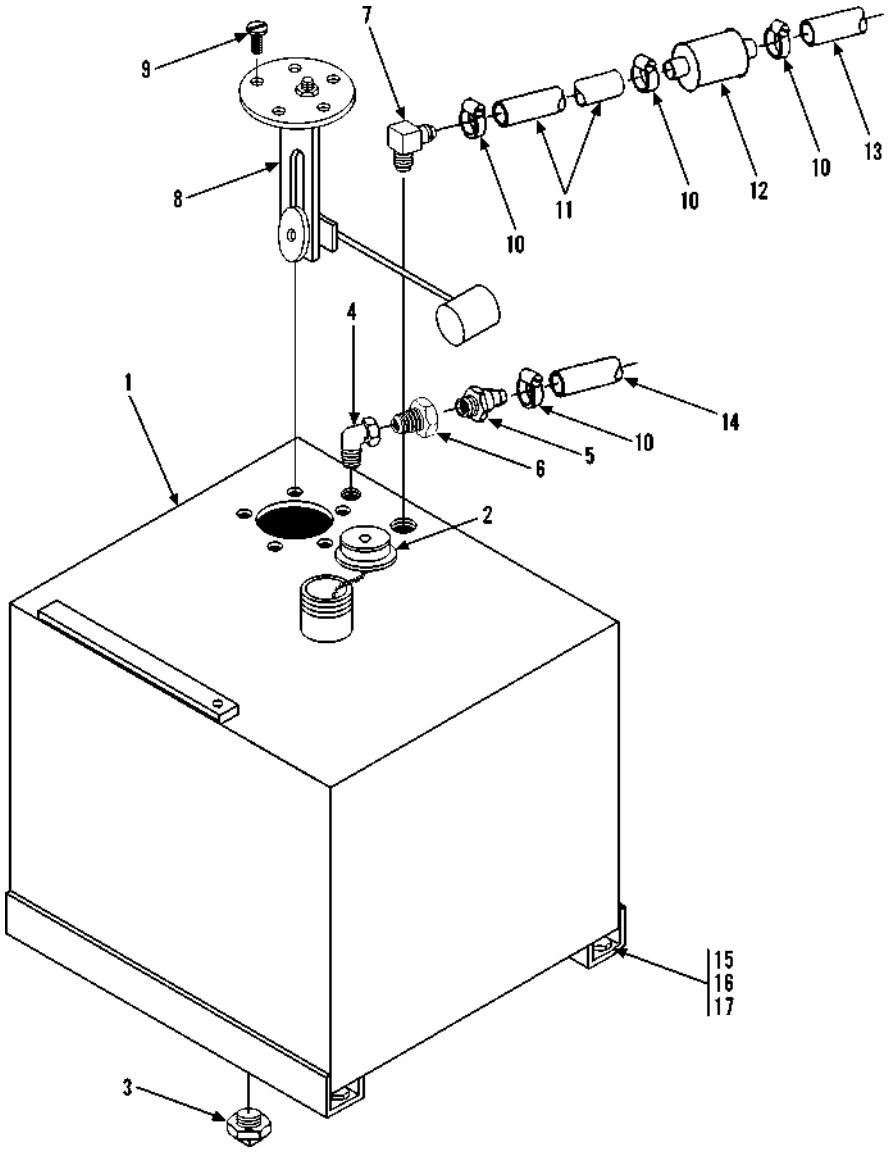

Item	Part No.	Qty.	Description Of Part
	9108-5016	Ref	FUEL TANK ASSY, (includes items 1 thru 9)
1	9108-3501	1	FUEL TANK, (includes items 2 & 3)
2	8654-1381	1	FUEL TANK CAP, (w/chain)
3	8871-1283	1	HEX SOCKET PIPE PLUG, 1/2
* 4	8871-2011	1	STREET ELBOW, 90 DEGREES, 1/8
5	8874-1805	1	HOSE NIPPLE
6	8871-1385	1	REDUCING BUSHING, 1/2X1/8
7	8471-2746	1	HOSE NIPPLE, 90 DEGREES, 1/2X3/8
8	9040-0654	1	FUEL SENDER, (includes item 9)
9		5	SCREW
10	8348-3497	4	HOSE CLAMP

Item	Part No.	Qty.	Description Of Part
11		11"	FUEL LINE HOSE, 5/16" I.D.
12	9108-3218	1	FUEL FILTER
13		56"	FUEL LINE HOSE, 5/16" I.D.
14		56"	FUEL LINE HOSE, 3/16" I.D.
* 15	8820-1095	4	HEX HD CAPSCREW, 5/8-11X1-1/2, GR5
* 16	8856-1008	4	WASHER, 5/8
* 17	8855-1015	4	LOCKWASHER, 5/8
			NOTE: ONLY ITEMS WITH PART NUMBERS ARE AVAILABLE FOR SERVICE

** Revised illustration and item 4; added items 15, 16 & 17.*

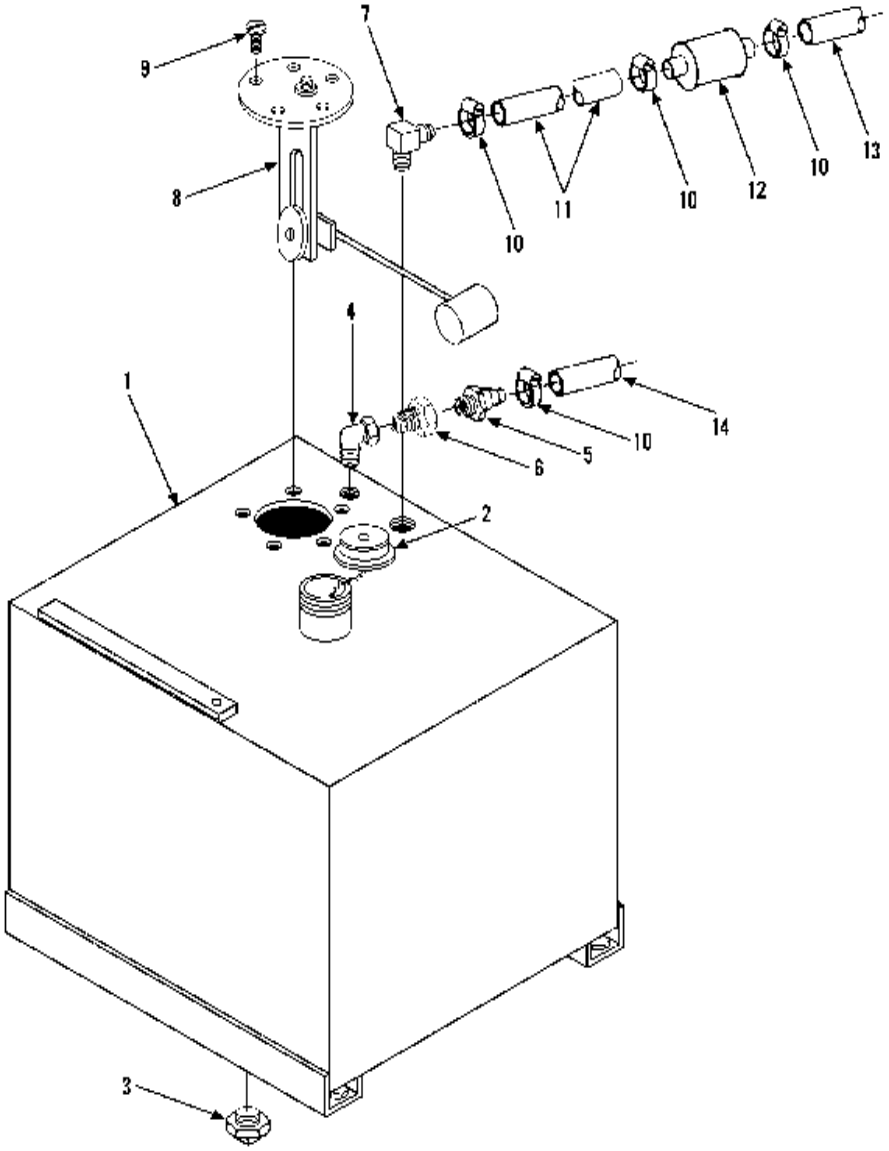

Item	Part No.	Qty.	Description Of Part
	9112-5104	Ref	FUEL TANK ASSY (includes items 1 thru 9)
1	9115-3031	1	FUEL TANK (includes items 2 & 3)
2	8654-1381	1	FUEL TANK CAP, (w/chain)
3	8871-1283	1	HEX SOCKET PIPE PLUG, 1/2
4	8871-2011	1	STREET ELBOW, 90 DEGREES, 1/8
5	8874-1805	1	HOSE NIPPLE, 1/8
6	8871-1385	1	REDUCING BUSHING, 1/2X1/8
7	8471-2746	1	HOSE NIPPLE, 90 DEGREES, 1/2X3/8
8	9114-3316	1	FUEL SENDER
9	9108-3491	5	GASKETED SCREW, 10-32
10	8348-3497	4	HOSE CLAMP
11		11"	FUEL LINE HOSE, 3/8" I.D.
12	9108-3218	1	FUEL FILTER
13		60"	FUEL LINE HOSE, 5/16" I.D.
14		56"	FUEL LINE HOSE, 7/32" I.D.

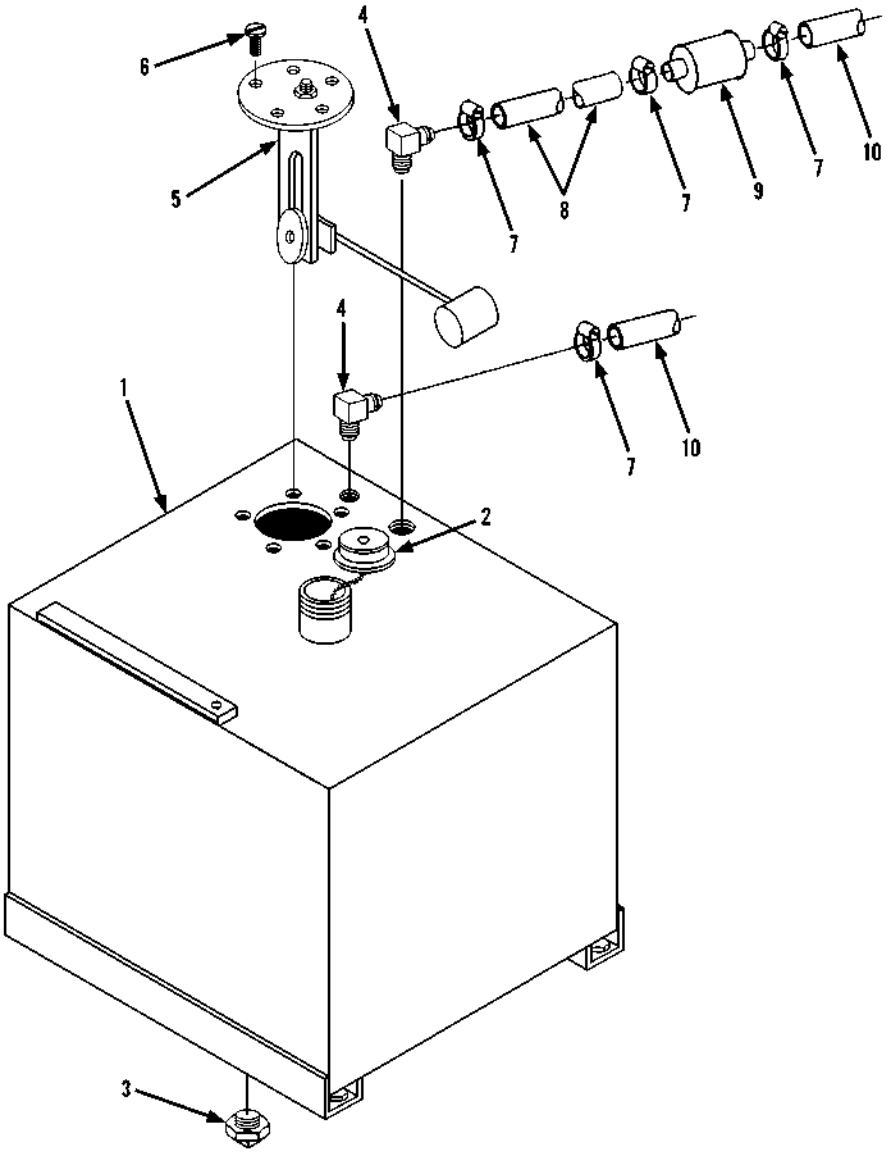

Item	Part No.	Qty.	Description Of Part
	9115-5016	1	FUEL TANK ASSY (includes items 1 thru 6)
1	9115-3031	1	FUEL TANK (includes items 2 & 3)
2	8654-1381	1	FUEL TANK CAP (w/chain)
3	8871-1283	1	HEX SOCKET PIPE PLUG, 1/2
4	8471-2746	2	HOSE NIPPLE, 90 DEGREES, 1/2X3/8
5	9114-3316	1	FUEL SENDER
6	9108-3491	5	GASKETED SCREW, 10-32
7	8348-3497	4	HOSE CLAMP
8		11"	FUEL LINE HOSE, 3/8" I.D.
9	9108-3218	1	FUEL FILTER
10		143"	FUEL LINE HOSE, 5/16" I.D.

ENGINE & ATTACHING PARTS
(9108-5013) Radiator Assembly

Starting Serial No. 0188002
Original Issue 1-90
Revised 2-5-98

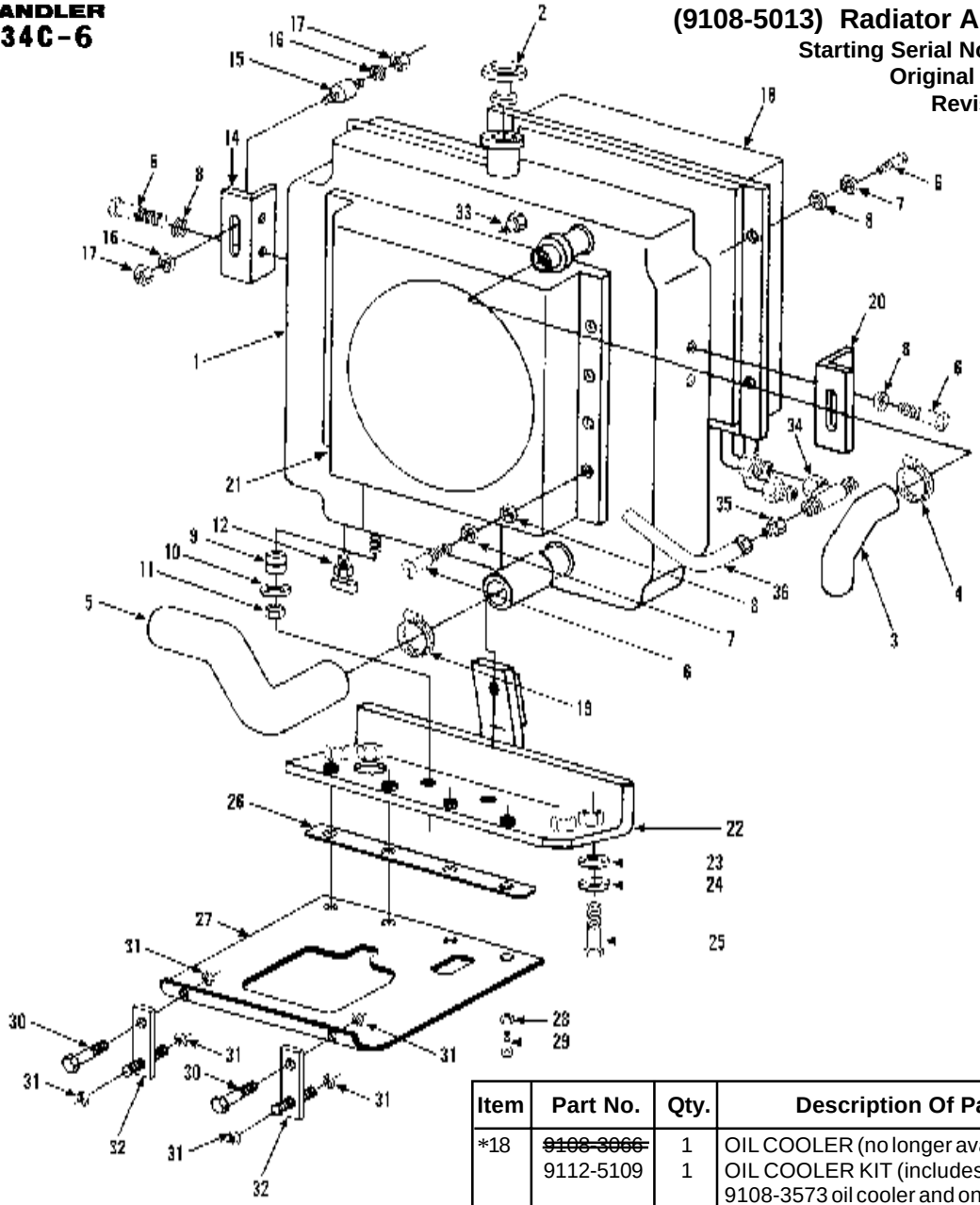

Item	Part No.	Qty.	Description Of Part
	9108-5013	Ref	RADIATOR ASSY (includes items 1, 2, 6 thru 14, 18, 20, 21 & 22)
1	9108-3065	1	RADIATOR (includes item 2)
2	9108-4198	1	RADIATOR CAP, 15 PSI
3	9108-3094	1	UPPER RADIATOR HOSE
4	8507-1128	1	HOSE CLAMP
5	9108-3364	1	LOWER RADIATOR HOSE
6	8820-1016	16	HEX HD CAPSCREW, 5/16-18X1/2, GR5
7	8856-1003	12	WASHER, 5/16
8	8855-1010	16	LOCKWASHER, 5/16
9	8368-3308	2	SHOCK MOUNT
10	9020-5918	2	WASHER
11	8852-1206	2	HEX LOCKNUT, 3/8-16
12	8452-1056	1	DRAIN COCK
14	9108-1181	1	MOUNTING BRACKET
15	9103-3137	1	SHOCK MOUNT
16	8856-1003	2	FLAT WASHER, 5/16
17	8852-1205	2	HEX LOCKNUT, 5/16-18

Item	Part No.	Qty.	Description Of Part
*18	~~9108-3066~~	1	OIL COOLER (no longer available)
	9112-5109	1	OIL COOLER KIT (includes one 9108-3573 oil cooler and one 8471-9110 hose assy)
19	8688-3327	2	HOSE CLAMP
20	9108-1541	1	MOUNTING BRACKET
21	9108-3085	1	RADIATOR SHROUD
22	9108-6041	1	RADIATOR MOUNT
23	8856-1006	4	FLAT WASHER, 1/2
24	8855-1013	4	LOCKWASHER, 1/2
25	8820-1067	4	HEX HD CAPSCREW, 1/2-13X1-1/2, GR5
26	9130-1086	1	FLAT BAR
27	9130-3057	1	DUST SHIELD
28	8856-1003	4	WASHER
29	8820-1021	4	HEX HD CAPSCREW, 5/16-18X1-1/4, GR5
30	8820-1020	2	HEX HD CAPSCREW, 5/16-18X1, GR5
31	7714-3006	6	WHIZ LOCKNUT, 5/16-18
32	9108-1654	2	BAR
33	9003-0271	1	FITTING
34	8866-2227	1	SWIVEL NUT BRANCH TEE
35	8866-1345	1	REDUCER ADAPTER
	8866-1408	1	NUT
36	8471-7872	1	HOSE ASSY

** Added replacement kit for oil cooler that is no longer available.*

ENGINE & ATTACHING PARTS
(9132-5004) Radiator Assembly (534C-6 TURBO)

Starting Serial No. 0388043
Original Issue 7-95
Revised 4-1-97

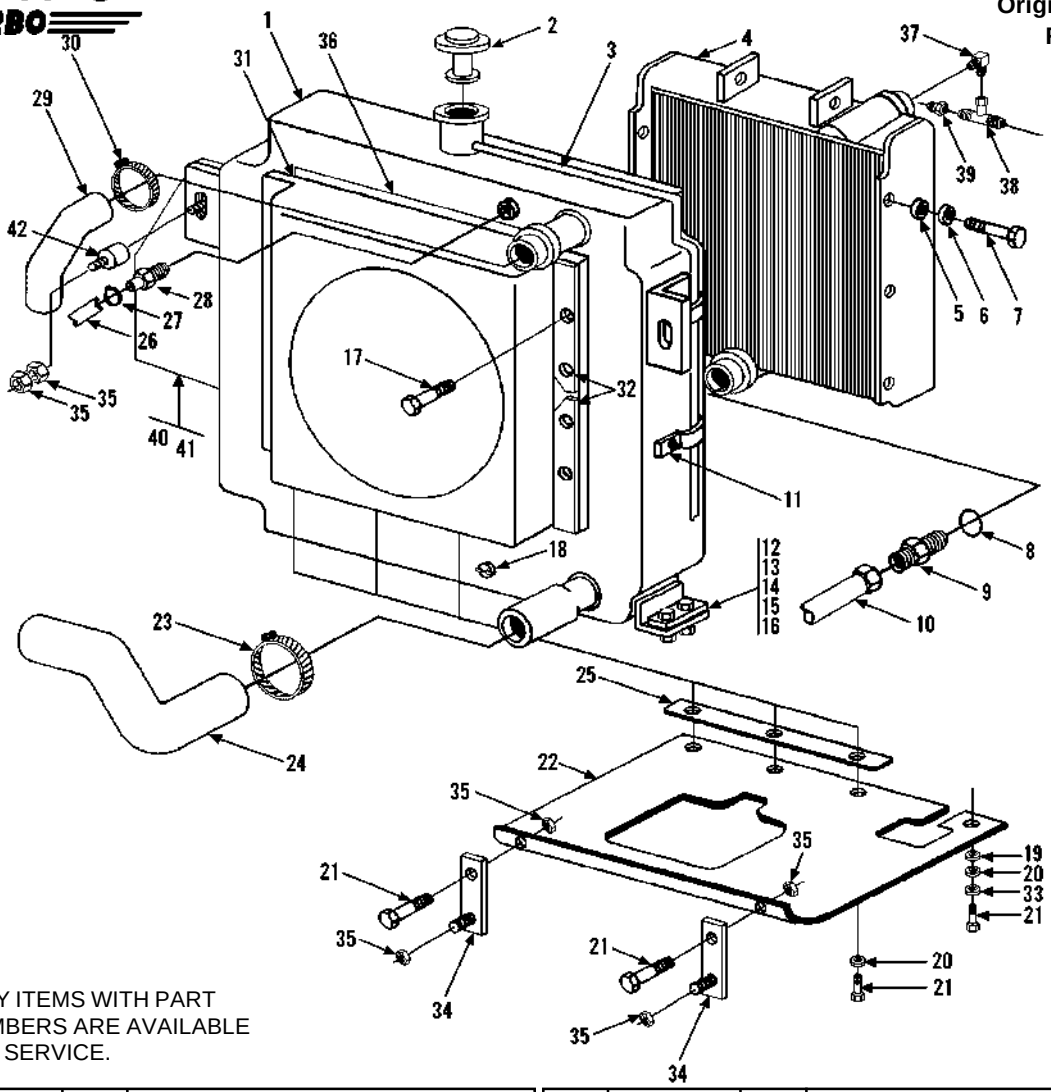

NOTE: ONLY ITEMS WITH PART NUMBERS ARE AVAILABLE FOR SERVICE.

Item	Part No.	Qty.	Description Of Part
	9132-5004	1	RADIATOR ASSY (includes items 1 thru 7, 9, 11, 17, 18, 31, 32 & 36 thru 39)
1	9114-3028	1	RADIATOR (includes item 2)
2	9114-4008	1	RADIATOR CAP
3		38"	HOSE, 5/16 I.D.
4	9114-3029	1	OIL COOLER
5	8855-1011	6	LOCKWASHER, 3/8
6	8856-1109	4	FLAT WASHER, 3/8
7	8820-1034	6	HEX HD CAPSCREW, 3/8-16X7/8, GR5
8		1	O-RING (included with item 9)
9	8325-1287	1	ADAPTER (includes item 8)
10	8471-8643	1	HOSE ASSY
11	8594-1016	2	SUPPORT CLAMP
12	8368-3308	4	MOUNTING PAD
13	9020-5918	4	WASHER
14	8820-1037	4	HEX HD CAPSCREW, 3/8-16X1-1/2, GR5
15	8856-1109	4	FLAT WASHER, 3/8
16	8852-1206	4	LOCKNUT
17	7714-3003	8	WHIZ-LOK SCREW, 5/16-18X5/8
18	8452-1056	1	DRAIN COCK
19	8856-1003	1	FLAT WASHER, 5/16
20	8855-1010	4	LOCKWASHER, 5/16
21	8820-1020	6	HEX HD CAPSCREW, 5/16-18X1, GR5
* 22	9132-3010	1	DUST SHIELD
23	8688-3327	2	HOSE CLAMP
24	9114-3045	1	LOWER RADIATOR HOSE
25	9114-1231	1	FLAT BAR
26		18"	HOSE, 5/16 I.D.
27	8688-3106	2	HOSE CLAMP
28	9003-0271	1	FITTING
29	9115-3012	1	UPPER RADIATOR HOSE
30	8507-1128	2	HOSE CLAMP
31	9114-1104	1	RADIATOR SHROUD
32	9114-1322	4	CLAMP BAR
33	8856-1111	1	FLAT WASHER, 1/2
34	9108-1564	2	BAR
35	7714-3006	6	WHIZ-LOK NUT, 5/16-18
36	9020-0755	52"	GASKA-TAPE
37	8362-3032	1	ELBOW
38	8692-1327	1	TEE
39	9132-3007	1	REDUCER
40	9132-1002	1	L.H. RADIATOR MOUNT
	9132-1001	1	R.H. RADIATOR MOUNT
41	8561-1278	2	WELD STUD
42	9103-3137	2	SHOCK MOUNT

** Changed part number on item 22.*

ENGINE & ATTACHING PARTS
(9108-5139) Radiator Assembly - 534C-6

Starting Serial No. 0488238
Original Issue 8-97
Revised 6-29-01

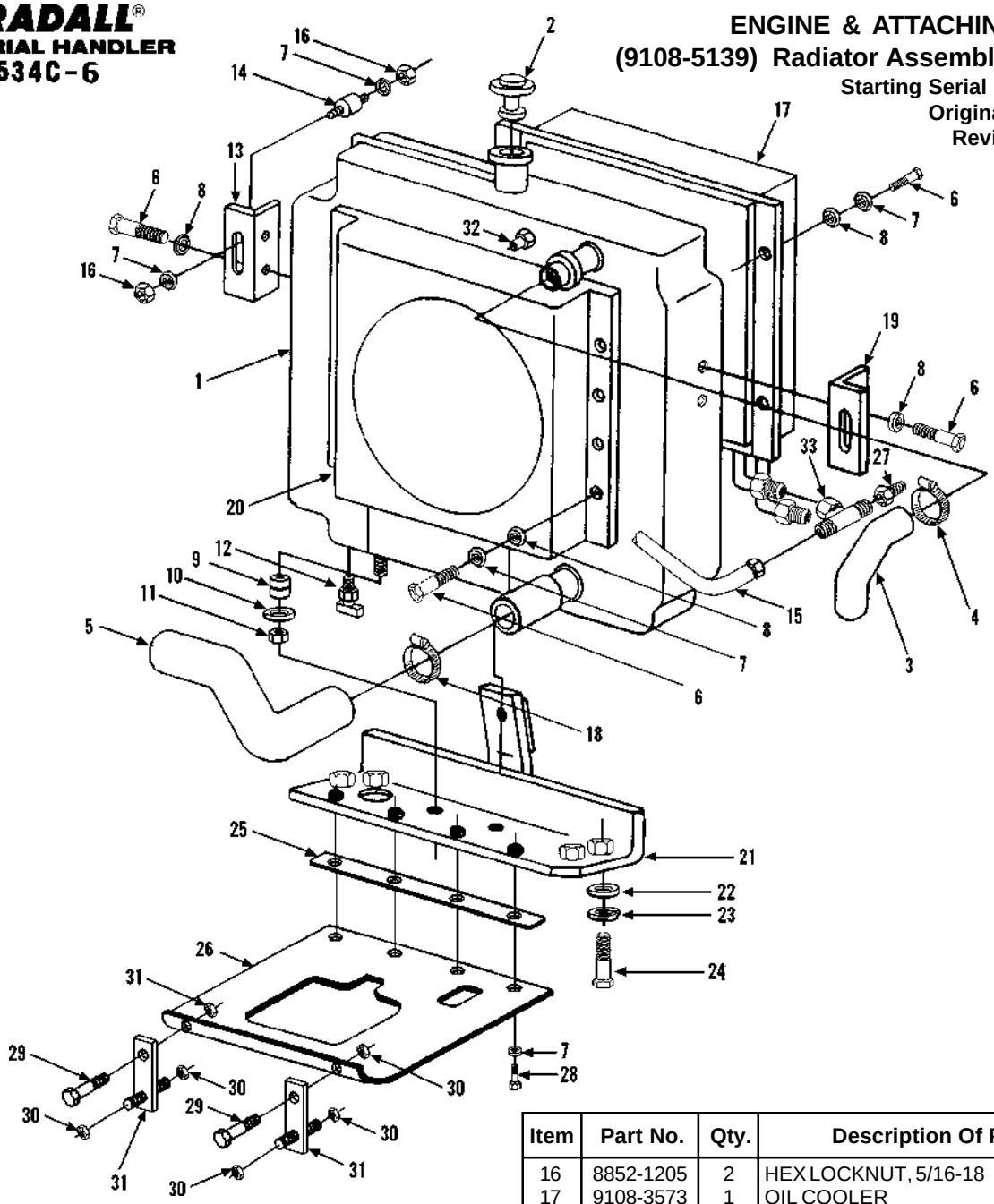

Item	Part No.	Qty.	Description Of Part
	9108-5139	Ref	RADIATOR ASSY, (includes items 1 thru 6, 12 of 7, 8, 12, 13, 15, 17 thru 20, 27, 32, & 33)
1	9114-3269	1	RADIATOR, (includes item 2)
2	9108-4198	1	RADIATOR CAP, 15 PSI
3	9108-3094	1	UPPER RADIATOR HOSE
4	8507-1128	1	HOSE CLAMP
5	9108-3364	1	LOWER RADIATOR HOSE
6	8820-1016	16	HEX HD CAPSCREW, 5/16-18X1/2, GR5
7	8856-1003	18	FLAT WASHER, 5/16
8	8855-1010	16	LOCKWASHER, 5/16
9	8368-3308	2	SHOCK MOUNT
10	9020-5918	2	WASHER
11	8852-1206	2	HEX LOCKNUT, 3/8-16
12	8452-1056	1	DRAIN COCK
13	9108-1181	1	MOUNTING BRACKET
14	9103-3137	2	SHOCK MOUNT
15	8471-9109	1	HOSE ASSEMBLY

Item	Part No.	Qty.	Description Of Part
16	8852-1205	2	HEX LOCKNUT, 5/16-18
17	9108-3573	1	OIL COOLER
18	8688-3327	2	HOSE CLAMP
19	9108-1541	1	MOUNTING BRACKET
20	9108-3085	1	RADIATOR SHROUD
21	9108-6174	1	RADIATOR MOUNT
22	8856-1006	4	FLAT WASHER, 1/2
23	8855-1013	4	LOCKWASHER, 1/2
24	8820-1067	4	HEX HD CAPSCREW, 1/2-13X1-1/2, GR5
25	9130-1086	1	FLAT BAR
26	9130-3057	1	DUST SHIELD
27	8866-1345	1	TUBE END REDUCER, 3/4X3/8, (includes nut)
	8866-1408	1	NUT
28	8820-1021	4	HEX HD CAPSCREW, 5/16-18X1-1/4, GR5
29	8820-1020	2	HEX HD CAPSCREW, 5/16-18X1, GR5
30	7714-3006	6	WHIZ LOCKNUT, 5/16-18
31	9108-1654	2	BAR
32	9003-0271	1	FITTING
33	8866-2227	1	SWIVEL NUT BRANCH TEE, 3/4 TUBE

** Revised illustration & parts list.*

ENGINE & ATTACHING PARTS
(9132-5023) Radiator Assembly (534C-6 TURBO)

Starting Serial No. 0488238
Original Issue 11-97

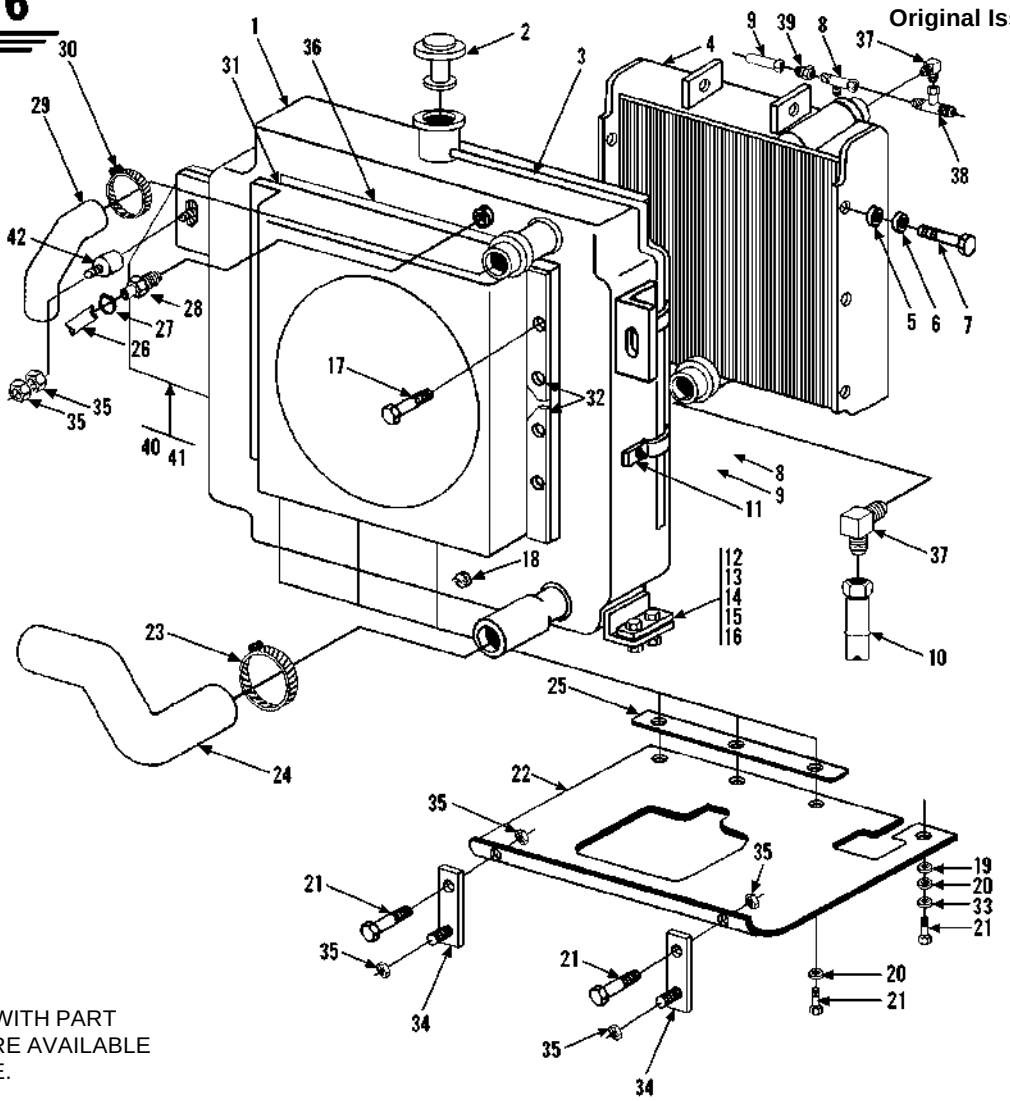

NOTE: ONLY ITEMS WITH PART NUMBERS ARE AVAILABLE FOR SERVICE.

Item	Part No.	Qty.	Description Of Part
	9132-5023	1	RADIATOR ASSY (includes items 1 thru 8, 11, 17, 18, 28, 31, 32, 35 thru 39)
1	9114-3328	1	RADIATOR (includes item 2)
2	9114-4008	1	RADIATOR CAP
3		38"	HOSE, 5/16 I.D.
4	9114-3029	1	OIL COOLER
5	8855-1011	6	LOCKWASHER, 3/8
6	8856-1109	4	FLAT WASHER, 3/8
7	8820-1034	6	HEX HD CAPSCREW, 3/8-16X7/8, GR5
8	8866-2244	1	SWIVEL NUT RUN TEE, 1" TUBE
9	8471-8958	1	HOSE ASSY
10	8471-8912	1	HOSE ASSY
11	8594-1016	2	SUPPORT CLAMP
12	8368-3308	4	MOUNTING PAD
13	9020-5918	4	WASHER
14	8820-1037	4	HEX HD CAPSCREW, 3/8-16X1-1/2, GR5
15	8856-1109	4	FLAT WASHER, 3/8
16	8852-1206	4	LOCKNUT
17	7714-3003	6	WHIZ-LOK SCREW, 5/16-18X5/8
18	8452-1056	1	DRAIN COCK
19	8856-1003	1	FLAT WASHER, 5/16
20	8855-1010	4	LOCKWASHER, 5/16

Item	Part No.	Qty.	Description Of Part
21	8820-1020	6	HEX HD CAPSCREW, 5/16-18X1, GR5
22	9132-3010	1	DUST SHIELD
23	8688-3327	2	HOSE CLAMP
24	9114-3045	1	LOWER RADIATOR HOSE
25	9114-1231	1	FLAT BAR
26		18"	HOSE, 5/16 I.D.
27	8688-3106	2	HOSE CLAMP
28	9003-0271	1	FITTING
29	9115-3012	1	UPPER RADIATOR HOSE
30	8507-1128	2	HOSE CLAMP
31	9114-1485	1	RADIATOR SHROUD
32	9114-3348	6	CLAMP BAR
33	8856-1111	1	FLAT WASHER, 1/2
34	9108-1654	2	BAR
35	7714-3006	6	WHIZ-LOK NUT, 5/16-18
36	9020-0755	52"	GASKA-TAPE
37	8362-3032	2	ELBOW
38	8692-1327	1	TEE
39	9132-3007	1	REDUCER
40	9132-1002	1	L.H. RADIATOR MOUNT
	9132-1001	1	R.H. RADIATOR MOUNT
41	8561-1278	2	WELD STUD
42	9103-3137	2	SHOCK MOUNT

ENGINE & ATTACHING PARTS
Air Cleaner Piping
Starting Serial No. 0188002
Original Issue 1-90
Revised 1-10-03

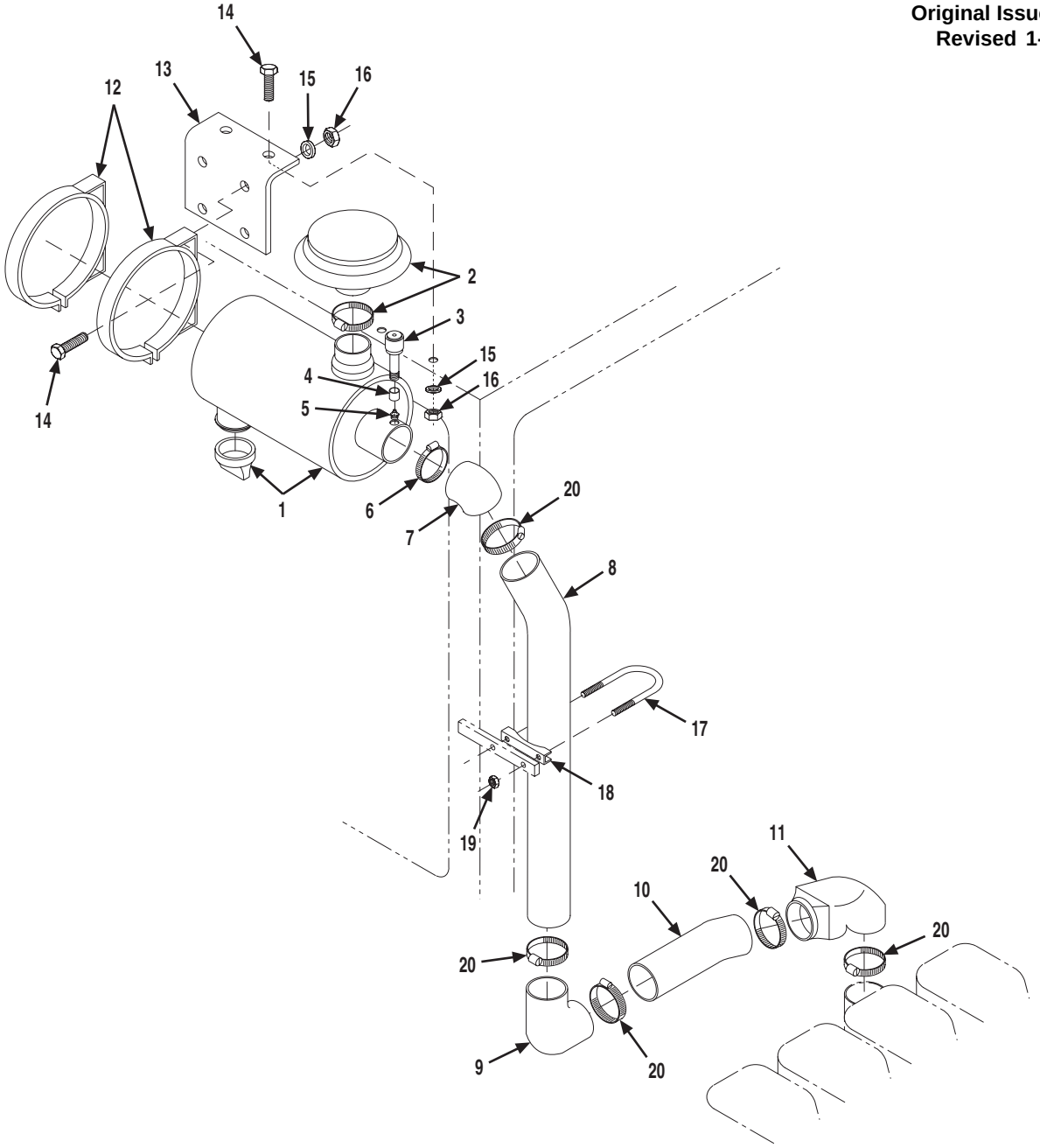

Item	Part No.	Qty.	Description Of Part
1		1	AIR CLEANER, (see page 5-8 for details)
* 2	9147-3100	1	INLET CAP, (includes band clamp)
3	7738-3154	1	SERVICE INDICATOR
4	8871-1210	1	PIPE COUPLING, 1/8
5	8870-1023	1	CLOSE NIPPLE, 1/8X3
6	9116-3137	1	HOSE CLAMP
7	9108-3129	1	REDUCING ELBOW
8	9108-3127	1	AIR INTAKE TUBE
9	9108-3128	1	AIR INTAKE ELBOW
10	9112-3025	1	AIR INTAKE TUBE
11	9108-3126	1	AIR INTAKE ELBOW
12	7710-3138	2	MOUNTING BAND

Item	Part No.	Qty.	Description Of Part
13	9108-1327	1	BRACKET
14	8820-1020	6	HEX HD CAPSCREW, 5/16-18X1, GR5
15	8856-1108	6	FLAT WASHER, 5/16
16	8852-1305	6	HEX LOCKNUT, 5/16-18
17	2492-1332	1	MUFFLER CLAMP, (includes items 18 & 19)
18		1	BRIDGE
19		2	NUT
20	9116-3129	5	HOSE CLAMP
			NOTE: ONLY ITEMS WITH PART NUMBERS ARE AVAILABLE FOR SERVICE.

** Revised illustration and item 2.*

ENGINE & ATTACHING PARTS

Air Cleaner Piping

Starting Serial No. 0288777
Original Issue 10-95
Revised 1-10-03

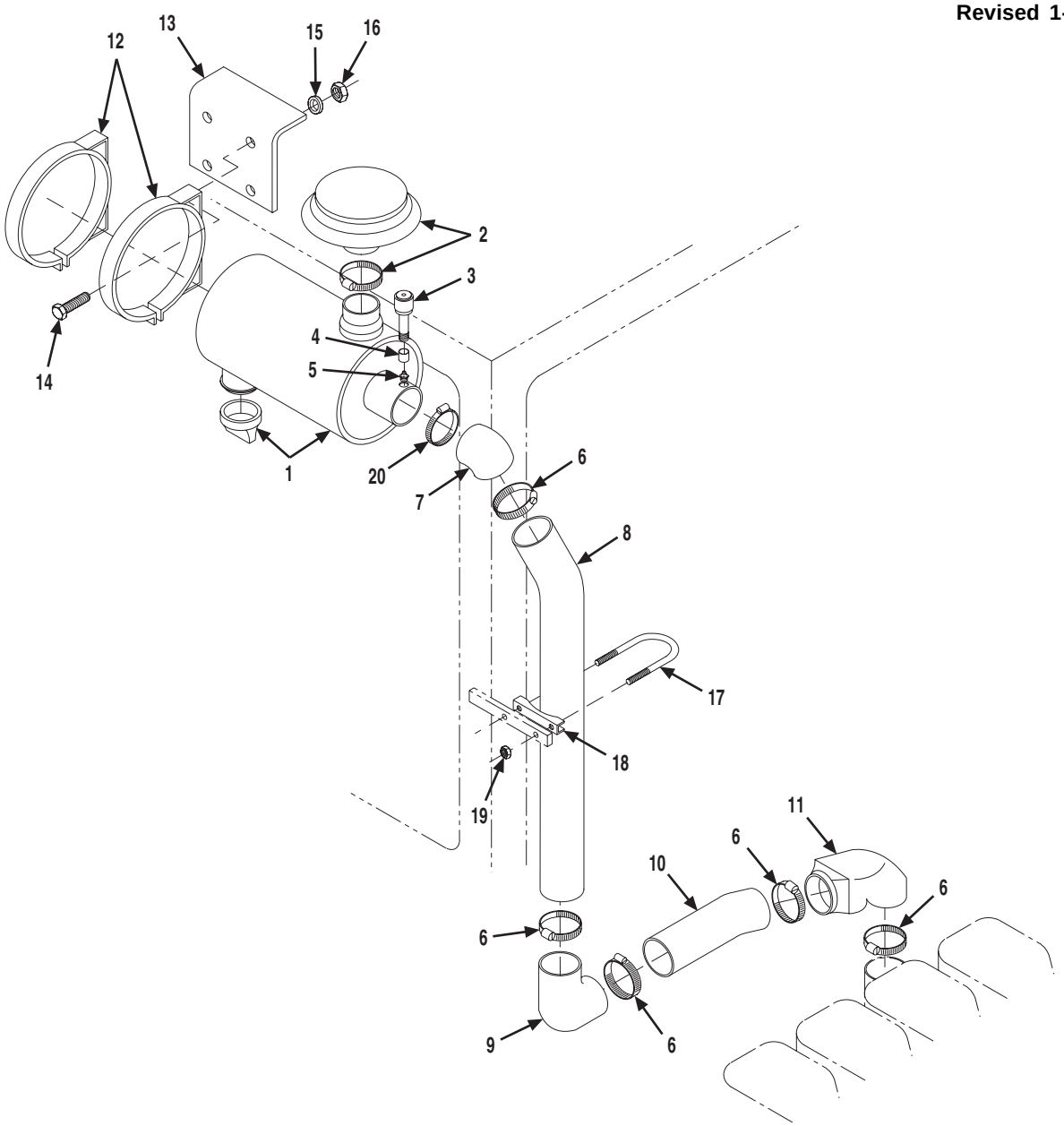

Item	Part No.	Qty.	Description Of Part
1		1	AIR CLEANER, (see page 5-8 for details)
* 2	9147-3100	1	INLET CAP, (includes band clamp)
3	7738-3154	1	SERVICE INDICATOR
4	8871-1210	1	PIPE COUPLING
5	8870-1023	1	CLOSE NIPPLE, 1/8X3
6	9116-3129	5	HOSE CLAMP
7	9108-3129	1	REDUCING ELBOW
8	9108-3127	1	AIR INTAKE TUBE
9	9108-3128	1	AIR INTAKE ELBOW
10	9112-3025	1	AIR INTAKE TUBE
11	9108-3126	1	AIR INTAKE ELBOW
12	7710-3138	2	MOUNTING BAND

Item	Part No.	Qty.	Description Of Part
13	9115-1002	1	BRACKET
14	8820-1018	4	HEX HD CAPSCREW, 5/16-18X3/4, GR5
15	8856-1108	4	FLAT WASHER, 5/16
16	8852-1305	4	HEX LOCKNUT, 5/16-18
17	2492-1332	1	MUFFLER CLAMP, (includes items 18 & 19)
18		1	BRIDGE
19		2	NUT
20	9116-3137	1	HOSE CLAMP
			NOTE: ONLY ITEMS WITH PART NUMBERS ARE AVAILABLE FOR SERVICE.

** Revised illustration and item 2.*

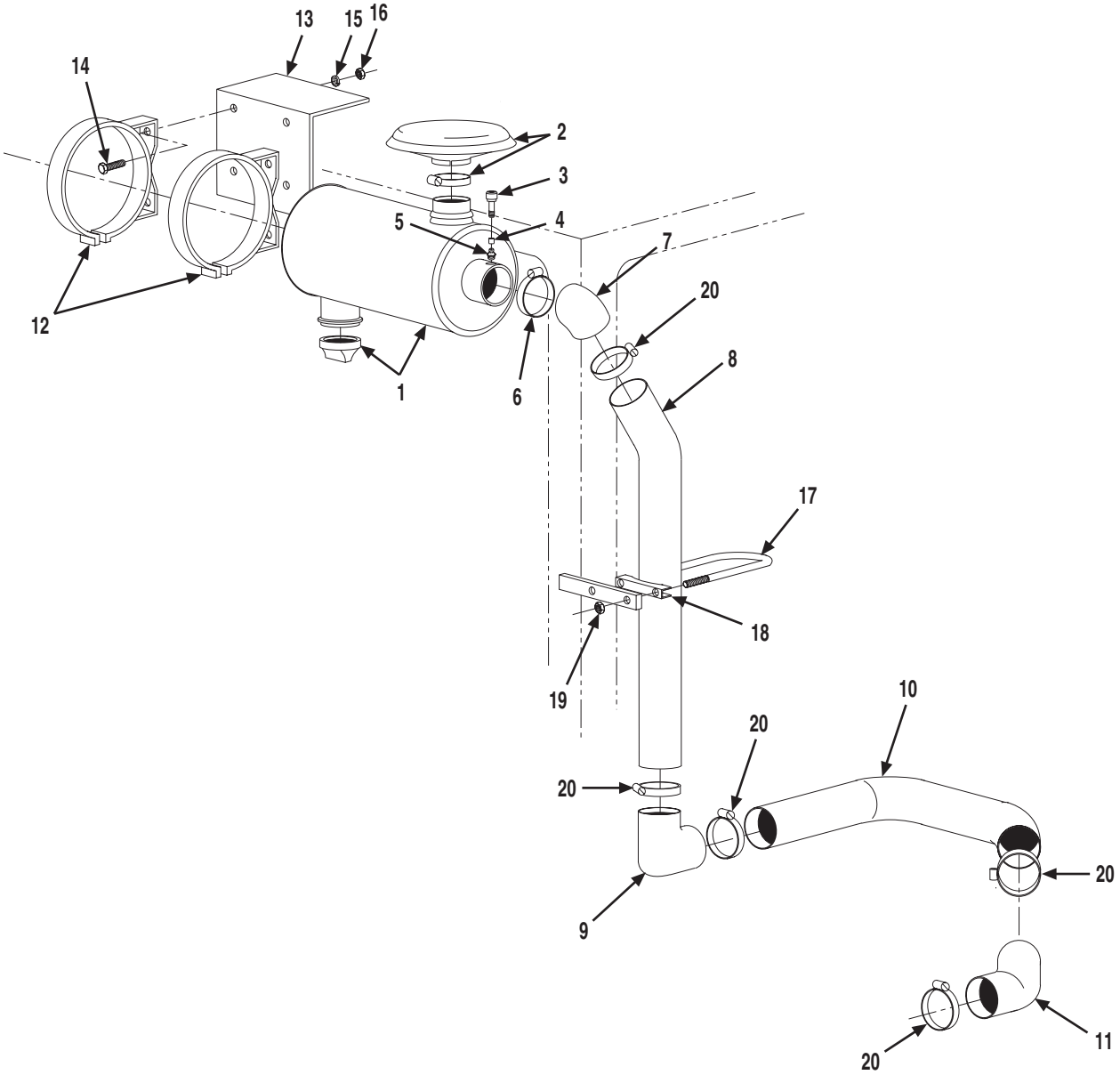

Item	Part No.	Qty.	Description Of Part
1		1	AIR CLEANER, (see page 5-8 for details)
* 2	9147-3100	1	INLET CAP, (includes band clamp)
3	7738-3154	1	SERVICE INDICATOR
4	8871-1210	1	PIPE COUPLING, 1/8
5	8870-1023	1	CLOSE NIPPLE, 1/8X3
6	9116-3137	1	HOSE CLAMP
7	9108-3129	1	REDUCING ELBOW
8	9114-3126	1	AIR INTAKE TUBE
9	9108-3128	1	AIR INTAKE ELBOW
10	9114-3125	1	AIR INTAKE TUBE
11	9108-3126	1	AIR INTAKE ELBOW
12	7710-3138	2	MOUNTING BAND

Item	Part No.	Qty.	Description Of Part
13	9115-1002	1	BRACKET
14	8820-1018	4	HEX HD CAPSCREW, 5/16-18X3/4, GR5
15	8856-1108	4	FLAT WASHER, 5/16
16	8852-1305	4	HEX LOCKNUT, 5/16-18
17	2492-1332	1	MUFFLER CLAMP, (includes items 18 & 19)
18		1	BRIDGE
19		2	NUT
20	9116-3129	5	HOSE CLAMP
			NOTE: ONLY ITEMS WITH PART NUMBERS ARE AVAILABLE FOR SERVICE.

** Revised illustration and item 2.*

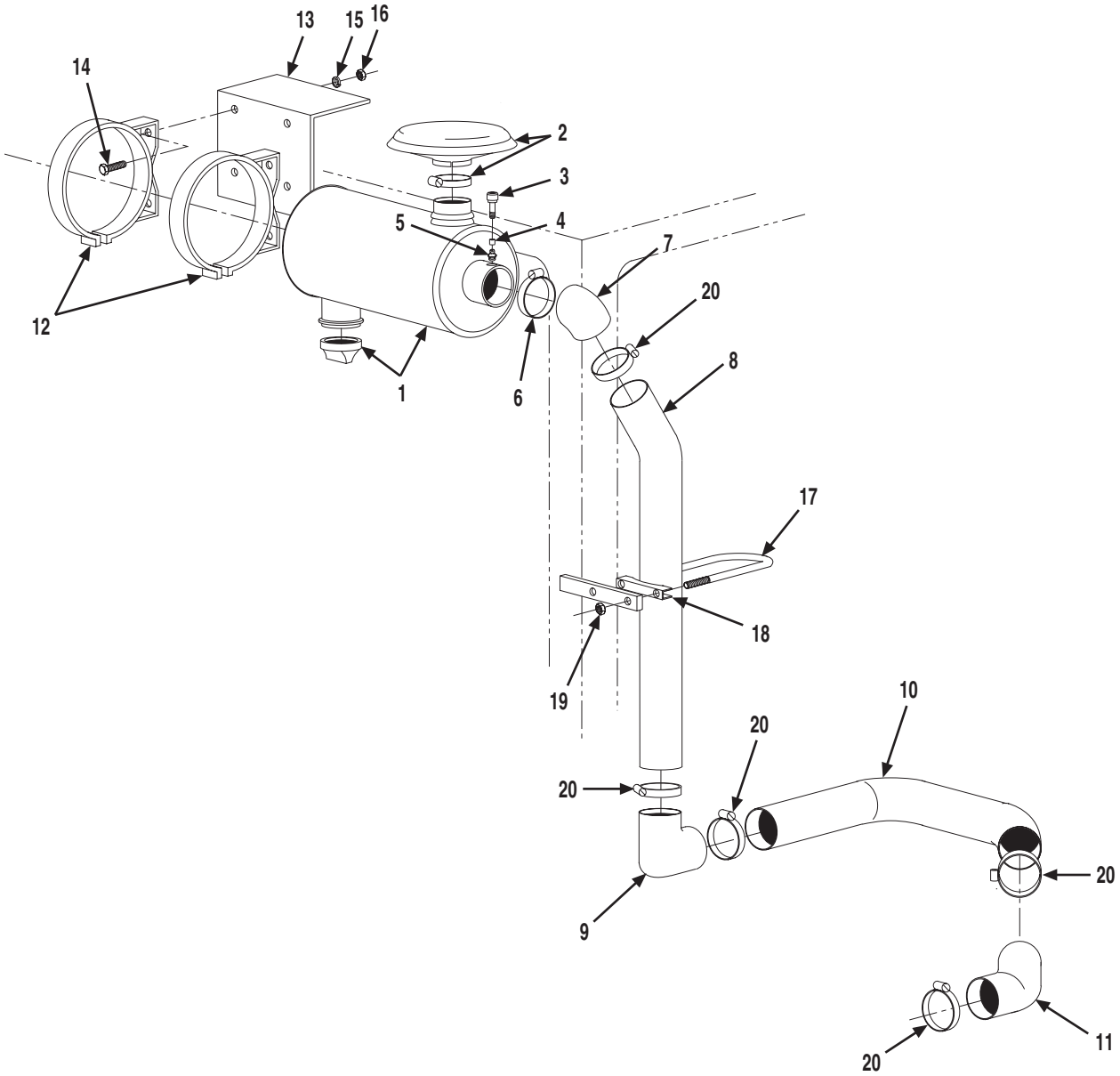

Item	Part No.	Qty.	Description Of Part
1		1	AIR CLEANER, (see page 5-8 for details)
* 2	9147-3100	1	INLET CAP, (includes band clamp)
3	7738-3154	1	SERVICE INDICATOR
4	8871-1210	1	PIPE COUPLING, 1/8
5	8870-1023	1	CLOSE NIPPLE, 1/8X3
6	9116-3137	1	HOSE CLAMP
7	9108-3129	1	REDUCING ELBOW
8	9114-3353	1	AIR INTAKE TUBE
9	9108-3128	1	AIR INTAKE ELBOW
10	9114-3364	1	AIR INTAKE TUBE
11	9115-3021	1	AIR INTAKE ELBOW
12	7710-3138	2	MOUNTING BAND

Item	Part No.	Qty.	Description Of Part
13	9115-1002	1	BRACKET
14	8820-1018	4	HEX HD CAPSCREW, 5/16-18X3/4, GR5
15	8856-1108	4	FLAT WASHER, 5/16
16	8852-1305	4	HEX LOCKNUT, 5/16-18
17	2492-1332	1	MUFFLER CLAMP, (includes items 18 & 19)
18		1	BRIDGE
19		2	NUT
20	9116-3129	5	HOSE CLAMP
			NOTE: ONLY ITEMS WITH PART NUMBERS ARE AVAILABLE FOR SERVICE.

** Revised illustration and item 2.*

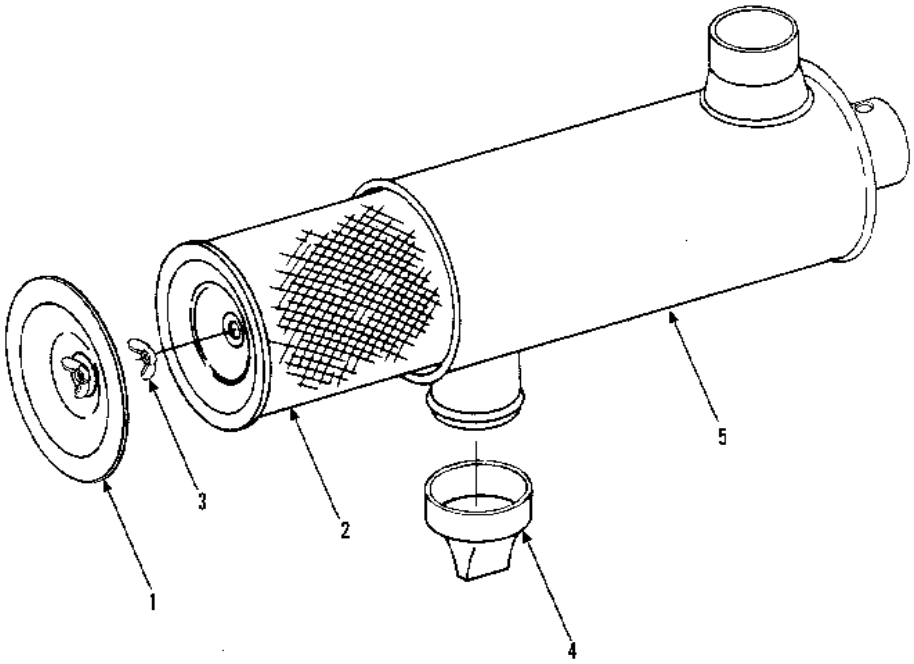

Item	Part No.	Qty.	Description Of Part-
	9020-5663	1	AIR CLEANER (includes items 1 thru 5)
1	9020-6606	1	COVER W/NUT
2	9020-6262	1	ELEMENT
3	9020-1414	1	WING NUT W/SEAL
4	9020-0807	1	VACUATOR
5		1	BODY (not sold separately order P/N 9020-5663)

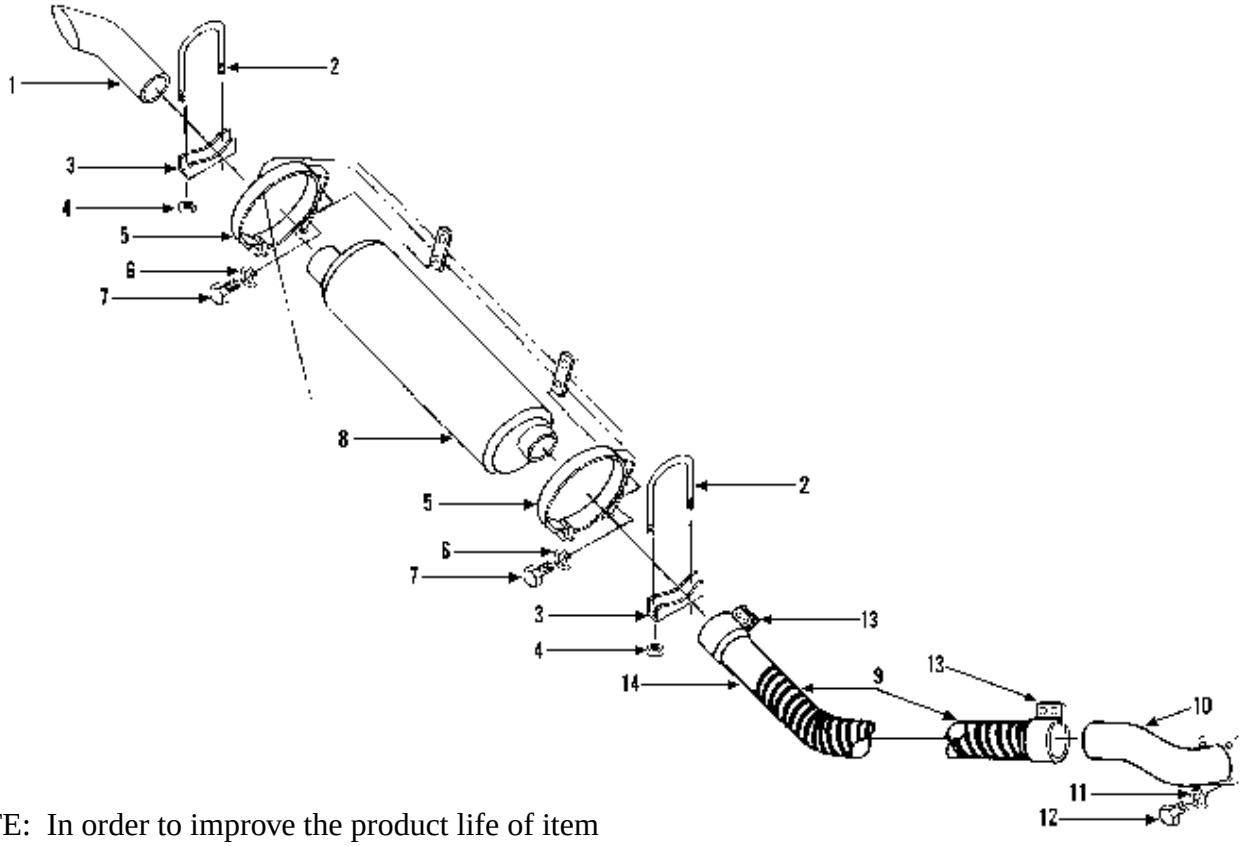

* NOTE: In order to improve the product life of item 5, we have developed a muffler mounting kit for service replacement. Order part number 9108-5146 which includes two 9114-1466 muffler mounts and two 8368-3175 muffler clamps.

Item	Part No.	Qty.	Description Of Part
	9112-5027	Ref	EXHAUST PIPE KIT (includes items 9, 13 & 14)
1	9108-3560	1	TAIL PIPE
2	8368-3175	2	MUFFLER CLAMP (includes items 3 & 4)
3		2	BRIDGE
4		4	NUT
* 5	9108-3253	2	MUFFLER BRACKET (see above note)
6	8855-1011	4	LOCKWASHER, 3/8
7	8820-1031	4	HEX HD CAPSCREW, 3/8-16X1-1/2, GR5
8	9108-3250	1	MUFFLER
9	9112-3090	1	FLEXIBLE CONNECTOR
10	9108-6055	1	EXHAUST TUBE
11	8319-1013	4	LOCKWASHER, M10
12	8319-1021	4	HEX HD CAPSCREW, M10X1.5X30
13	7721-3031	2	CLAMP
14	9104-1016	1	EXHAUST SLEEVE
			NOTE: ONLY ITEMS WITH PART NUMBERS ARE AVAILABLE FOR SERVICE.

** Added service note.*

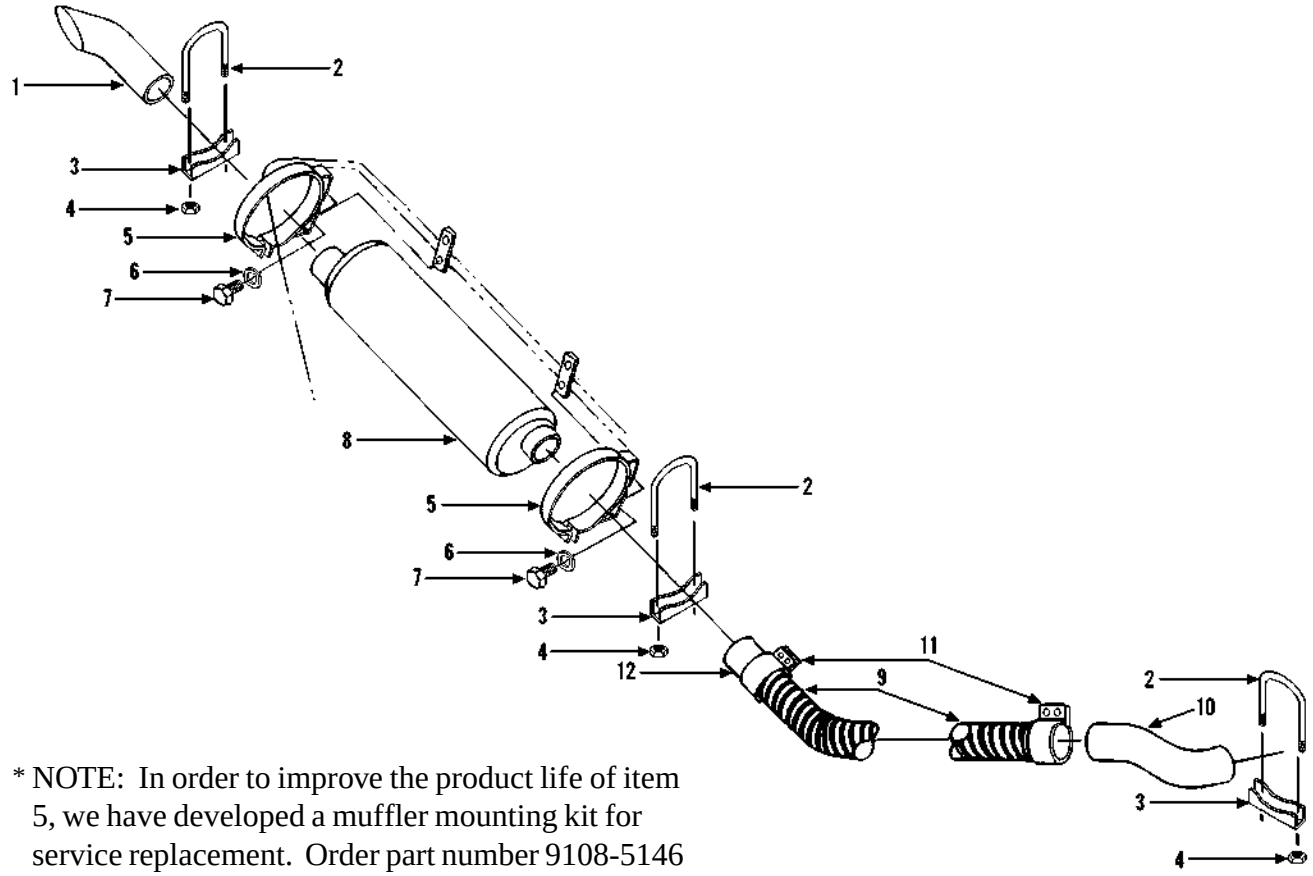

* NOTE: In order to improve the product life of item 5, we have developed a muffler mounting kit for service replacement. Order part number 9108-5146 which includes two 9114-1466 muffler mounts and two 8368-3175 muffler clamps.

Item	Part No.	Qty.	Description Of Part
1	9108-3560	1	TAIL PIPE
2	8368-3175	3	MUFFLER CLAMP (includes items 3 & 4)
3		3	BRIDGE
4		6	NUT
* 5	9108-3253	2	MUFFLER BRACKET
6	8855-1011	4	LOCKWASHER 3/8
7	8820-1031	4	HEX HD CAPSCREW, 3/8-16X1 1/2, GR5
8	9108-3250	1	MUFFLER
9	9108-3427	1	FLEXIBLE CONNECTOR
10	9114-6037	1	EXHAUST TUBE
11	7721-3031	2	SEAL CLAMP
12	9104-1016	1	EXHAUST SLEEVE
			NOTE: ONLY ITEMS WITH PART NUMBERS ARE AVAILABLE FOR SERVICE.

** Added service note.*

DRIVE TRAIN
(9108-3267) Front Axle Assembly

Starting Serial No. 0188002
Original Issue 1-90
Revised 9-20-95

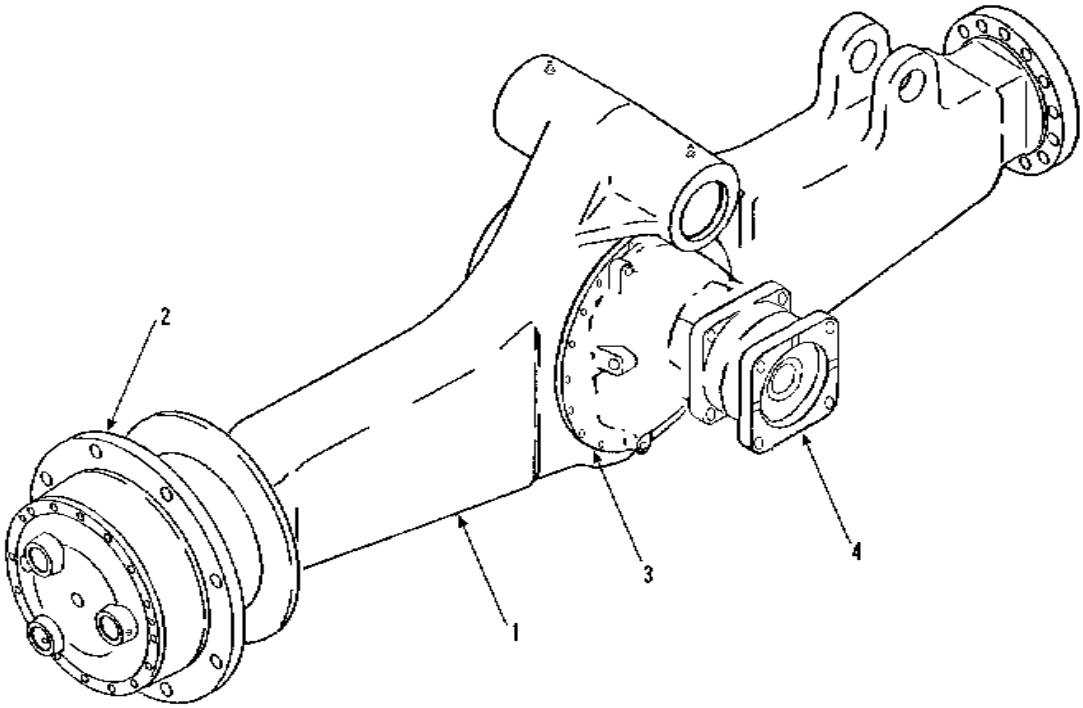

Item	Part No.	Qty.	Description Of Part
	9108-3267	1	FRONT AXLE ASSY (includes items 1 thru 4)
1		Ref	AXLE HOUSING ASSY (see page 6-2 for details)
2		Ref	WHEEL END ASSY (see page 6-5 for details)
3		Ref	CARRIER ASSY (see page 6-3 for details)
4		Ref	BRAKE ASSY (see page 6-4 for details)

** Changed upper left corner to designate model more clearly.*

DRIVE TRAIN
(9109-5023) Front Axle Assembly - 532C-6
(9112-5047) Front Axle Assembly - 534C-6

Starting Serial No. 0388247
Original Issue 3-96
Revised 4-1-97

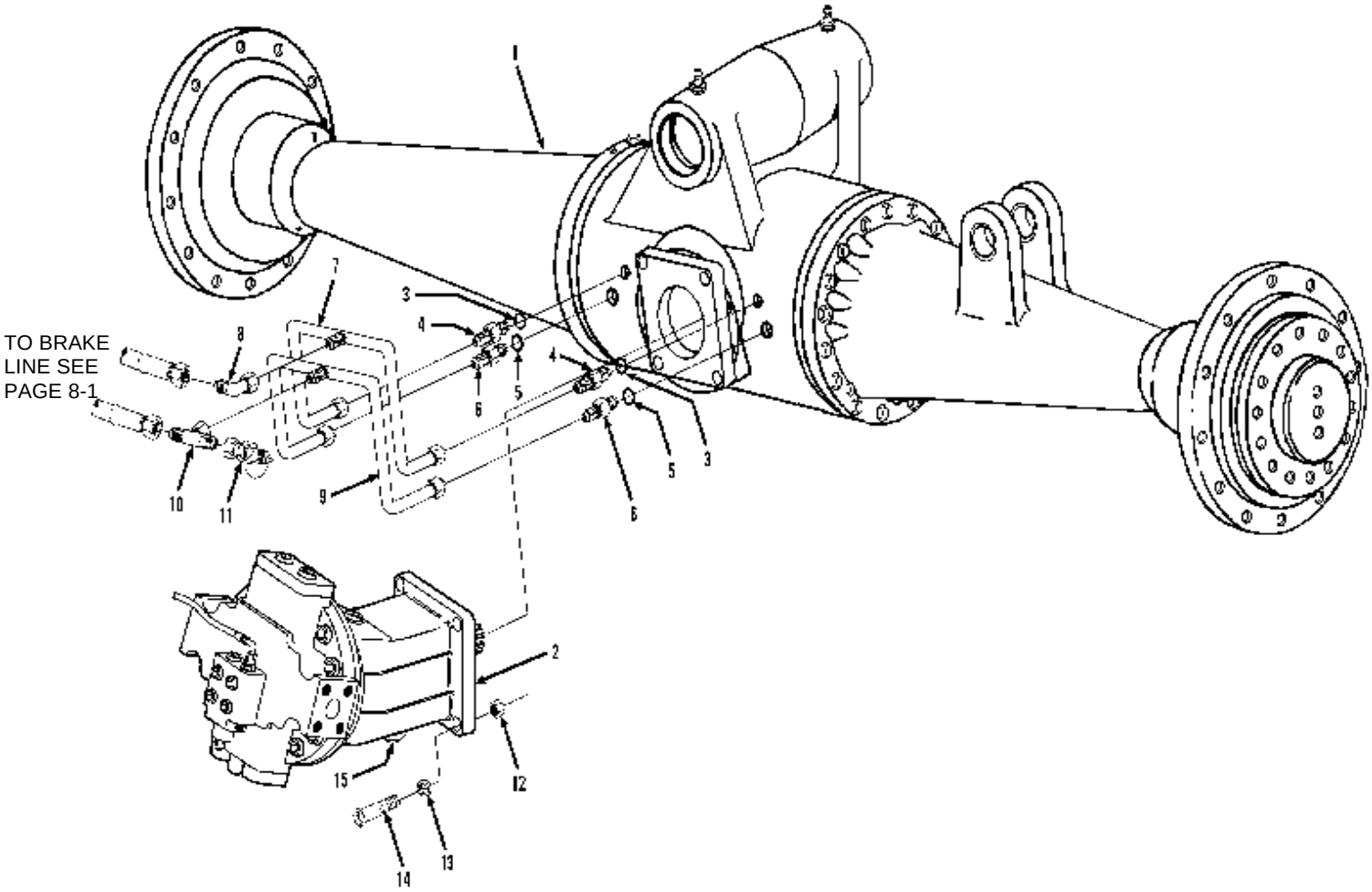

Item	Part No.	Qty.	Description Of Part
	9109-5023	1	FRONT AXLE ASSY - 532C-6 (includes items 1 thru 15)
	9112-5047	1	FRONT AXLE ASSY - 534C-6 (includes items 1 thru 15)
1		Ref	FRONT AXLE (see page 6-2 for details)
2		Ref	FRONT DRIVE MOTOR - 532C-6 (see page 10-19 for details)
		Ref	FRONT DRIVE MOTOR - 534C-6 (see page 10-20 for details)
3	8859-1205	2	O-RING
4	8866-2006	2	CONNECTOR (includes item 3)
5	8859-1204	2	O-RING
6	8866-2005	2	CONNECTOR (includes item 5)
7	9112-3130	1	PARK BRAKE TUBE LINE
8	8866-2106	1	ELBOW, 90 DEGREES (swivel nut)
9	9112-3127	1	SERVICE BRAKE TUBE LINE
10	8866-2224	1	SWIVEL NUT BRANCH TEE, 3/8 TUBE
11	9114-3172	1	MINI CHECK VALVE
12	8850-1012	4	HEX NUT, 3/4-10
13	9002-7473	4	HARD WASHER, 3/4
14	8320-1058	4	HEX HD CAPSCREW, 3/4-10X3-3/4, GR8
15	8866-2194	1	HEX SOCKET HD PLUG, (includes o-ring)
	8859-1206	1	O-RING

** Removed items 16 & 17, they are shown on page 8-1.*

DRIVE TRAIN
(9109-5020) Front Axle Assembly - 532C-6
(9108-5110) Front Axle Assembly - 534C-6

Starting Serial No. 0388349
Original Issue 6-96
Revised 4-1-97

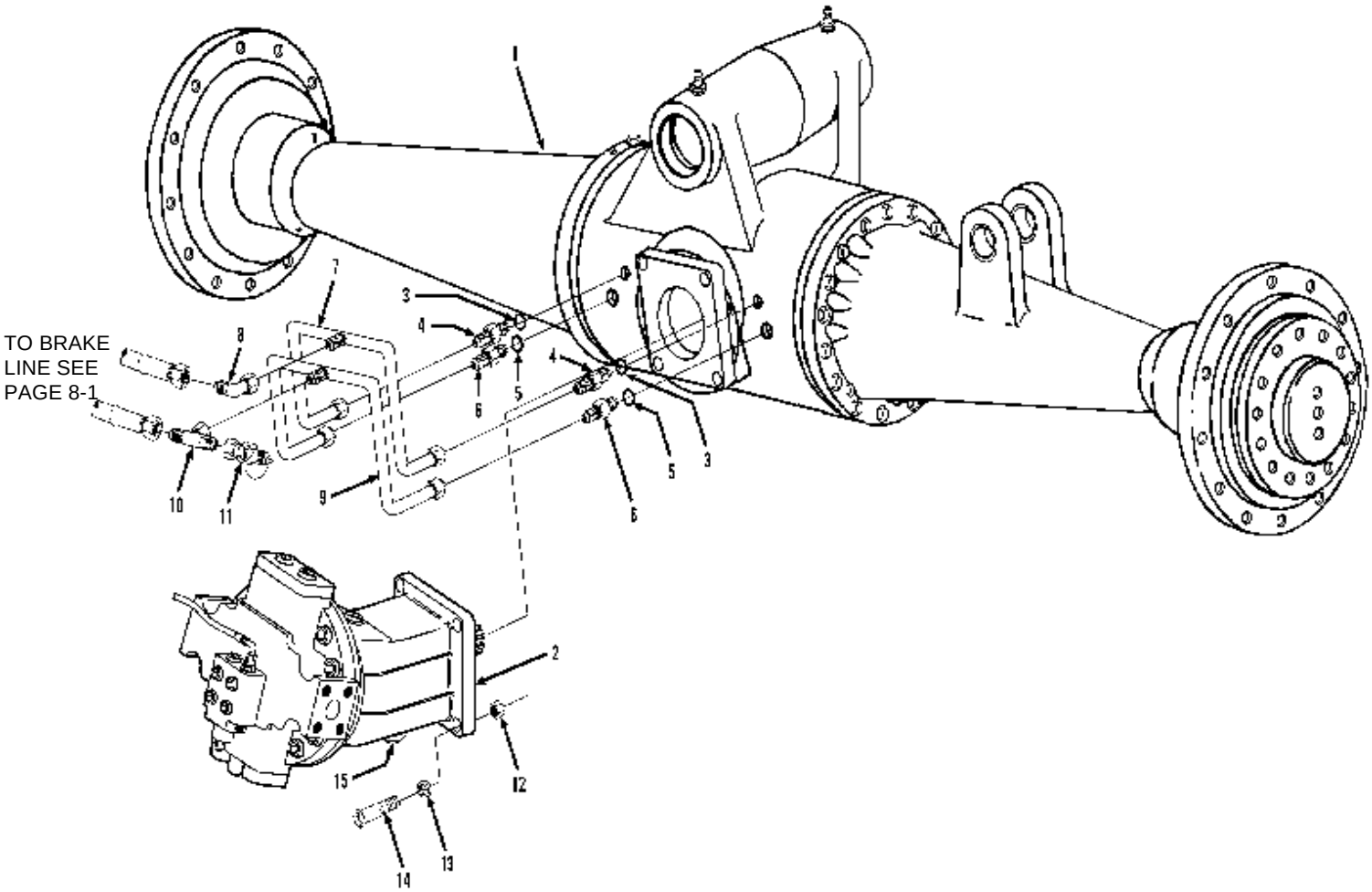

Item	Part No.	Qty.	Description Of Part
	9109-5020	1	FRONT AXLE ASSY - 532C-6 (includes items 1 thru 15)
	9108-5110	1	FRONT AXLE ASSY - 534C-6 (includes items 1 thru 15)
1		Ref	FRONT AXLE (see page 6-2 for details)
2		Ref	FRONT DRIVE MOTOR - 532C-6 (see page 10-19 for details)
		Ref	FRONT DRIVE MOTOR - 534C-6 (see page 10-20 for details)
3	8859-1205	2	O-RING
4	8866-2006	2	CONNECTOR (includes item 3)
5	8859-1204	2	O-RING
6	8866-2005	2	CONNECTOR (includes item 5)
7	9112-3130	1	PARK BRAKE TUBE LINE
8	8866-2106	1	ELBOW, 90 DEGREES (swivel nut)
9	9112-3127	1	SERVICE BRAKE TUBE LINE
10	8866-2224	1	SWIVEL NUT BRANCH TEE, 3/8 TUBE
11	9114-3172	1	MINI CHECK VALVE
12	8850-1012	4	HEX NUT, 3/4-10
13	9002-7473	4	HARD WASHER, 3/4
14	8320-1058	4	HEX HD CAPSCREW, 3/4-10X3-3/4, GR8
15	8866-2194	1	HEX SOCKET HD PLUG, (includes o-ring)
	8859-1206	1	O-RING

** Removed items 16 & 17, they are shown on page 8-1.*

DRIVE TRAIN
(9108-4044) Front Axle Assembly

Starting Serial No. 0188002
Original Issue 1-90
Revised 9-20-95

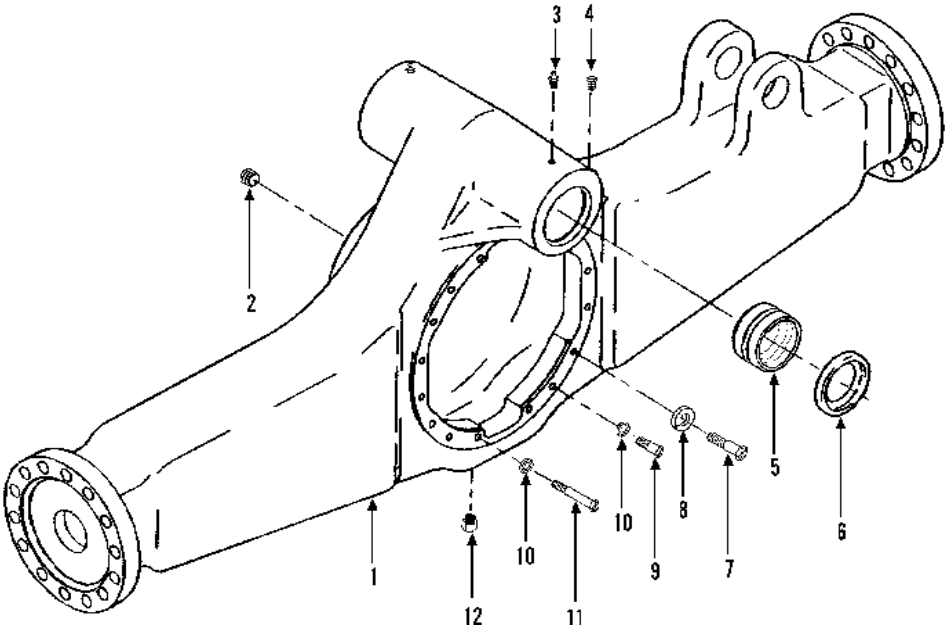

Item	Part No.	Qty.	Description Of Part
	9104-4044	1	AXLE HOUSING ASSY (includes items 2, 3, 5, 6 & 12)
1		Ref	AXLE HOUSING
2	8307-3699	1	FILLER PLUG
3	9108-4045	2	GREASE FITTING
4	7710-4289	1	BREATHER
5	9108-4046	2	INNER BEARING RACE
6	9108-4047	2	OIL SEAL
7	9108-4048	12	CAPSCREW

Item	Part No.	Qty.	Description Of Part
8	9108-4049	12	WASHER
9	9108-4050	2	CAPSCREW
10	9108-4051	4	WASHER
11	9108-4052	2	CAPSCREW
12	7710-4343	1	DRAIN PLUG
			NOTE: ONLY ITEMS WITH PART NUMBERS ARE AVAILABLE FOR SERVICE.

** Changed upper left corner to designate model more clearly.*

DRIVE TRAIN
(9112-3119) Front Axle
Starting Serial No. 0388247
Original Issue 3-96
Revised 3-18-98

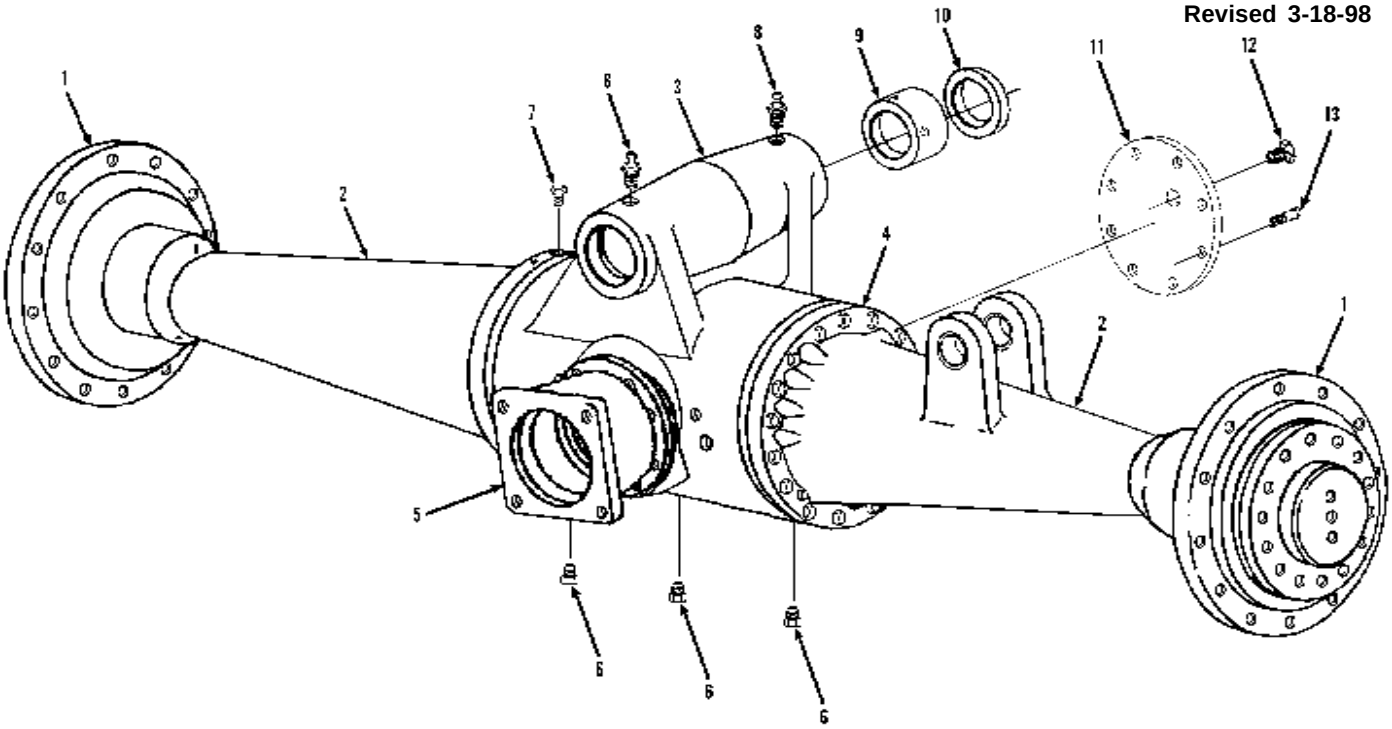

SERVICE NOTE: When servicing this axle, it is recommended that on machines with starting serial numbers prior to 0488111, that you:

1). Replace the old style cover plate with the new cover plate kit, p/n 9114-5130.

2). Then refill the axle with 40 pints of mobil 424 fluid instead of 33 pints.

Item	Part No.	Qty.	Description Of Part
	9112-3119	1	FRONT AXLE, (includes all items on pages 6-2, 6-3, 6-4 & 6-5)
*	9114-5130	1	COVER PLATE KIT, (includes new style items 11 and 12)
1		Ref	WHEEL FLANGE ASSY, (see page 6-5 for details)
2		Ref	LEFT & RIGHT HOUSING ASSY, (see page 6-5 for details)
3	9114-4326	1	CENTER HOUSING ASSY, (includes item 9)
4		Ref	BRAKE ASSY, (see page 6-4 for details)
5		Ref	CARRIER ASSY, (see page 6-3 for details)
6	9114-4327	3	DRAIN PLUG
7	9114-4328	1	VENT PLUG
8	9114-4329	2	LUBE FITTING
9	9108-4046	2	BUSHING
10	9108-4047	2	TRUNNION OIL SEAL
11	~~9114-4330~~	1	COVER-OLD STYLE, (starting S/N 0388247), NO LONGER AVAILABLE
*	9114-1511	1	COVER-NEW STYLE, (starting S/N 0488111)
12	9114-4331	1	LEVEL PLUG-OLD STYLE, (starting S/N 0388247)
*	8871-1284	1	LEVEL PLUG-NEW STYLE, (starting S/N 0488111)
13	9114-4332	8	CAPSCREW, M8X1.25X16.0

** Remove note about special tool and added service note and new items 11& 12 with serial number breaks. Added 9114-5130 Cover Plate Kit..*

DRIVE TRAIN
(9108-4163) Front Axle Differential Carrier

Starting Serial No. 0188002
Original Issue 1-90
Revised 6-27-07

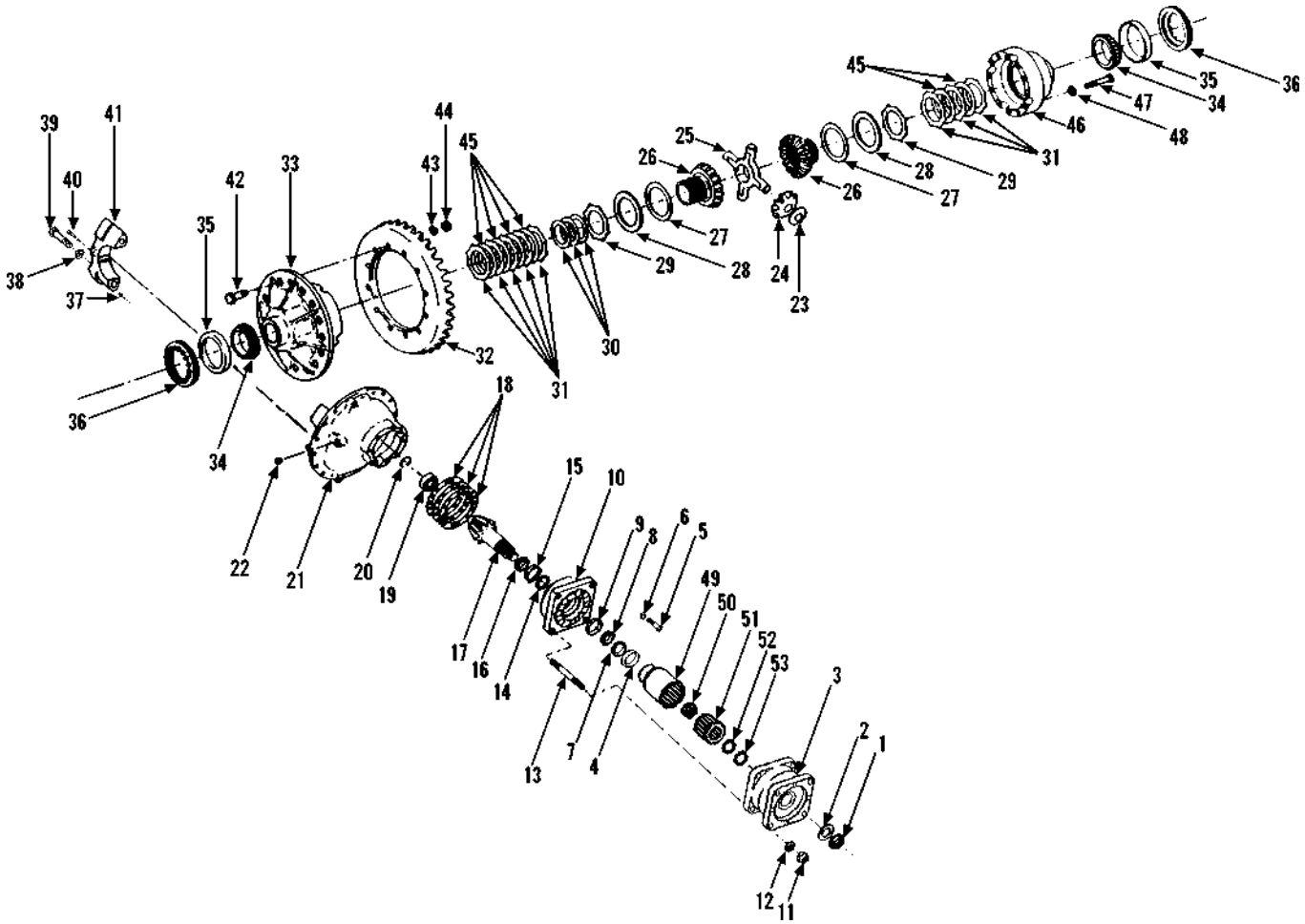

** Revised part number on item 40.*

DRIVE TRAIN
(9108-4163) Front Axle Differential Carrier
Starting Serial No. 0188002
Original Issue 1-90
Revised 6-27-07

Item	Part No.	Qty.	Description Of Part
	9108-4163	Ref	CARRIER ASSY, (includes all items)
1	9108-4053	1	NUT
2	9108-4054	1	WASHER
3		Ref	BRAKE ASSY, (see page 6-4 for details)
4	9108-4056	1	OIL SEAL
5	9108-4057	8	CAPSCREW
6		8	WASHER
7	9108-4058	1	THRUSTWASHER
8	9108-4059	1	PINION BEARING CONE, (outer)
9		1	PINION BEARING CAP, (outer)
10	9108-4060	1	PINION BEARING CAGE, (includes items 9 & 15)
11	9108-4061	4	NUT
12	9108-4062	4	WASHER
13	9108-4063	4	STUD
14	9108-4064	AR	.125 SPACER
	9108-4065	AR	.126 SPACER
	9108-4066	AR	.127 SPACER
	9108-4067	AR	.128 SPACER
	9108-4068	AR	.129 SPACER
	9108-4069	AR	.130 SPACER
	9108-4070	AR	.136 SPACER
	9108-4071	AR	.142 SPACER
	9108-4072	AR	.148 SPACER
	9108-4073	AR	.154 SPACER
	9108-4074	AR	.158 SPACER
15		1	PINION BEARING CUP
16	9108-4059	1	PINION BEARING CONE
17		1	PINION
18	9108-4075	AR	.003 SHIM
	9108-4076	AR	.005 SHIM
	9108-4077	AR	.010 SHIM
19	9108-4078	1	REAR PINION BEARING
20	9108-4079	1	REAR PINION LOCKRING
21	9108-4080	1	DIFFERENTIAL CARRIER ASSY
22	8307-3699	1	PLUG
23	9108-4081	4	THRUSTWASHER
24	9108-4082	4	PINION
25	9108-4083	1	SPIDER

Item	Part No.	Qty.	Description Of Part
26	9108-4084	2	GEAR
27	9108-4085	2	THRUSTWASHER
28	9108-4086	2	CLUTCH SPACER
29	9108-4087	2	CLUTCH DISC
30	9108-4088	AR	.005 SHIM
	9108-4089	AR	.010 SHIM
	9108-4090	AR	.013 SHIM
	9108-4091	AR	.015 SHIM
31	9108-4092	16	CLUTCH DISC
32	9108-4093	1	GEAR ASSY, (includes item 17)
33	9108-4094	1	FLANGE HALF DIFF. CASE ASSY (includes items 1, 19, 20, 23 thru 31, 33 & 42 thru 48)
	9108-4095	1	DIFFERENTIAL CASE ASSY, (includes items 23 thru 31, & 45 thru 48)
34	9108-4097	2	BEARING CONE
35	9108-4098	2	BEARING CUP
36	9108-4099	2	ADJUSTING RING
37		4	DOWEL PIN
38		4	WASHER
39		4	CAPSCREW
*40	8348-3441	2	COTTER PIN
41		2	BEARING CAP, (includes item 37)
42	9108-4101	12	CAPSCREW
43	9108-4102	12	WASHER
44	7710-4297	12	NUT
45	9108-4103	14	CLUTCH DISC
46		1	PLAIN HALF DIFF. CASE
47	9108-4104	12	CAPSCREW
48	9108-4102	12	WASHER
49	9108-4360	1	SPLINED SHAFT
50	9108-4354	1	INNER SPLINE ADAPTER
51	9108-4355	1	OUTER COLLAR
52	9108-4356	1	EXTERNAL SNAP RING
53	9108-4357	1	INTERNAL SNAP RING
			NOTE: ONLY ITEMS WITH PART NUMBERS ARE AVAILABLE FOR SERVICE

** Revised part number on item 40.*

DRIVE TRAIN
Carrier Assembly
Starting Serial No. 0388247
Original Issue 3-96
Revised 10-24-03

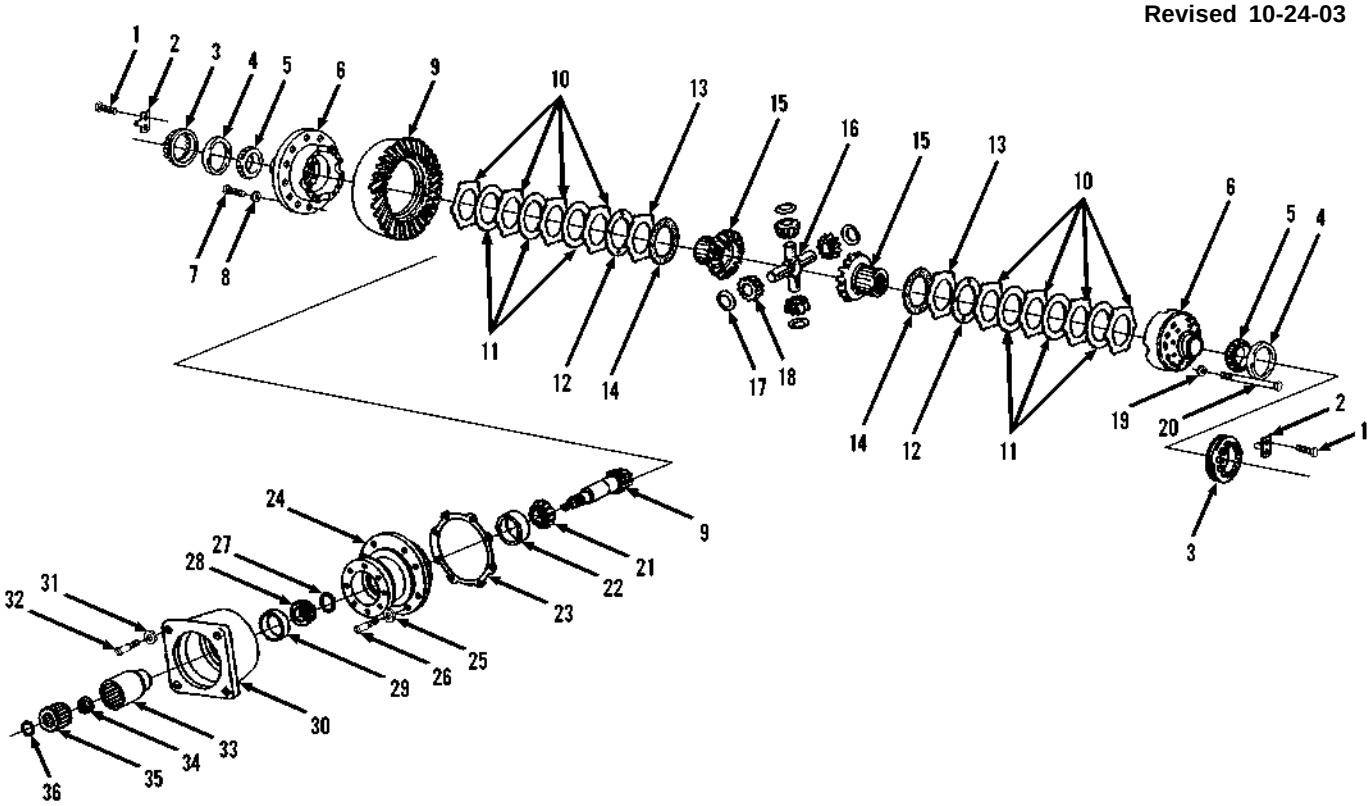

Item	Part No.	Qty.	Description Of Part
	9114-4382	Ref	LIMITED SLIP PLATE STACK KIT (includes items 10, 11, 12, 13 & 14)
	9114-4383	Ref	PINION CAGE SHIM KIT (includes item 23)
	9114-4384	Ref	DRIVE PINION SHIM KIT (includes item 27)
	9114-4385	Ref	LIMITED SLIP SHIM KIT (includes item 12)
1	9114-4386	4	CAPSCREW
2	9114-4387	2	ADJUSTER RING LOCK
3	9114-4388	2	ADJUSTER RING
4	8307-3828	2	BEARING CUP
5	9114-4389	2	BEARING CONE
* 6	9114-4390	1	DIFFERENTIAL CASE
7	9114-4391	12	CAPSCREW, M10X1.0X30.0
8	8348-3584	12	WASHER
9	9114-4392	1	SPIRAL GEAR & PINION
10		8	DRIVE FRICTION DISC (included in 9114-4382 kit)
11		6	DRIVEN FRICTION DISC (included 9114-4382 kit)
12		2	SHIM (0.33) (included in shim kit)
		2	SHIM (0.38) (included in shim kit)
		2	SHIM (0.25) (included in shim kit)
		2	SHIM (0.13) (included in shim kit)
13		2	COMPRESSION DISC (included in 9114-4382 kit)
14		2	THRUSTWASHER (included in 9114-4382 kit)
15	9114-4393	2	SIDE GEAR
16	9114-4394	1	SPIDER
17	9114-4395	4	THRUSTWASHER
18	9114-4396	4	PINION GEAR
19	8348-3584	12	WASHER

Item	Part No.	Qty.	Description Of Part
20	9114-4397	12	CAPSCREW, M10X1.5X80.0
21	9020-7204	1	BEARING CONE
22	9020-0440	1	BEARING CUP
23		4	SHIM (0.05) (included in shim kit)
		2	SHIM (0.125) (included in shim kit)
		3	SHIM (0.20) (included in shim kit)
		1	SHIM (0.50) (included in shim kit)
24	9114-4398	1	PINION CAGE ASSY (includes items 22 & 29)
25	9114-4399	8	WASHER
26	9114-4400	8	CAPSCREW, M12X1.75X40.0
27		1	SHIM (1.20) (included in shim kit)
		1	SHIM (1.25) (included in shim kit)
		1	SHIM (1.30) (included in shim kit)
		1	SHIM (1.35) (included in shim kit)
		1	SHIM (1.40) (included in shim kit)
		1	SHIM (1.45) (included in shim kit)
		1	SHIM (1.50) (included in shim kit)
28	9114-4401	1	BEARING CONE
29	9114-4402	1	BEARING CUP
30	9114-4403	1	MOTOR ADAPTER FLANGE
31	8348-3584	8	WASHER
32	9114-4404	8	CAPSCREW, .3750-16UNC-2AX1.25
33	9114-4405	1	DRIVEN SLEEVE
34	9114-4406	1	PINION NUT, M24X1.5
35	9114-4407	1	DRIVE SLEEVE
36	9114-4408	1	SNAP RING
			NOTE: ONLY ITEMS WITH PART NUMBERS ARE AVAILABLE FOR SERVICE.

** Changed description on item 6.*

DRIVE TRAIN
(9108-4055) Brake Assembly

Starting Serial No. 0188002
Original Issue 1-90
Revised 1-6-99

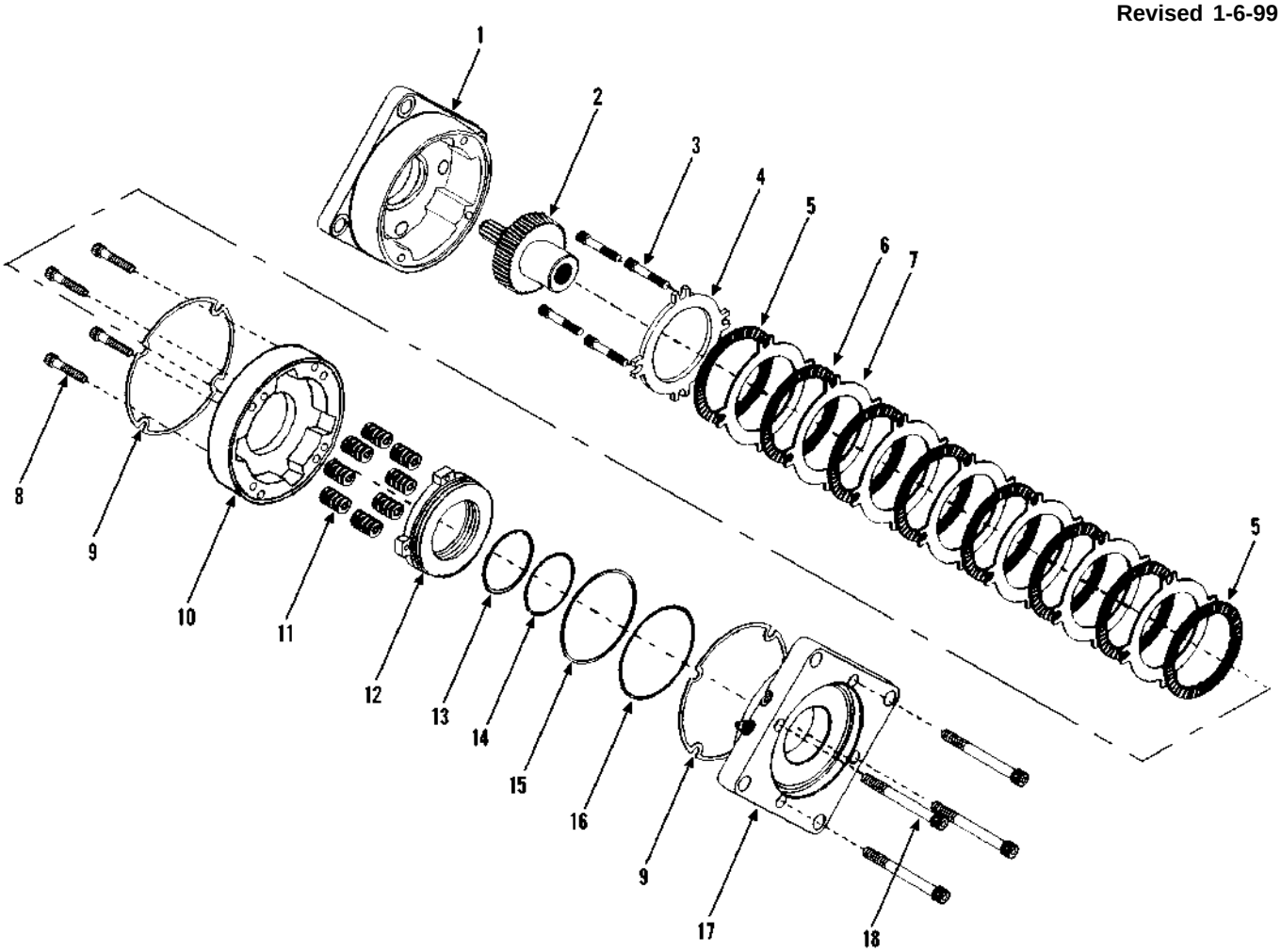

Item	Part No.	Qty.	Description Of Part
	9108-4055	1	BRAKE ASSY (includes items 1 thru 18)
	9108-4211	1	SPRING KIT (includes items 9 & 11)
*	9108-4212	1	SEAL KIT (includes items 9, & items 13 thru 16)
	9108-4213	1	LINING KIT (includes items 4, 5, 6, 7 & 9)
1		1	COVER PLATE
2		1	SPLINED SHAFT
3		4	SOCKET HD SHOULDER BOLT
4		1	PRIMARY DISC
5		2	ROTOR DISC (thick)
6		6	ROTOR DISC
7		7	STATOR DISC
8		4	SOCKET HD CAPSCREW
9		2	CASE GASKET
10		1	SPRING PLATE
11		8	SPRING

Item	Part No.	Qty.	Description Of Part
12		1	PISTON
13		1	BACK-UP RING
14		1	O-RING
15		1	BACK-UP RING
16		1	O-RING
17		1	PRESSURE PLATE
18		4	SOCKET HD BOLT
			NOTE: ONLY ITEMS WITH PART NUMBERS ARE AVAILABLE FOR SERVICE.
			NOTE: ALL REPAIR KITS CONTAIN TWO TYPES OF GASKETS (ITEM 9). BE SURE TO USE THE CORRECT GASKETS FOR YOUR MODEL

** Corrected includes note on seal kit.*

DRIVE TRAIN
Brake Assembly
Starting Serial No. 0388247
Original Issue 3-96
Revised 5-31-05

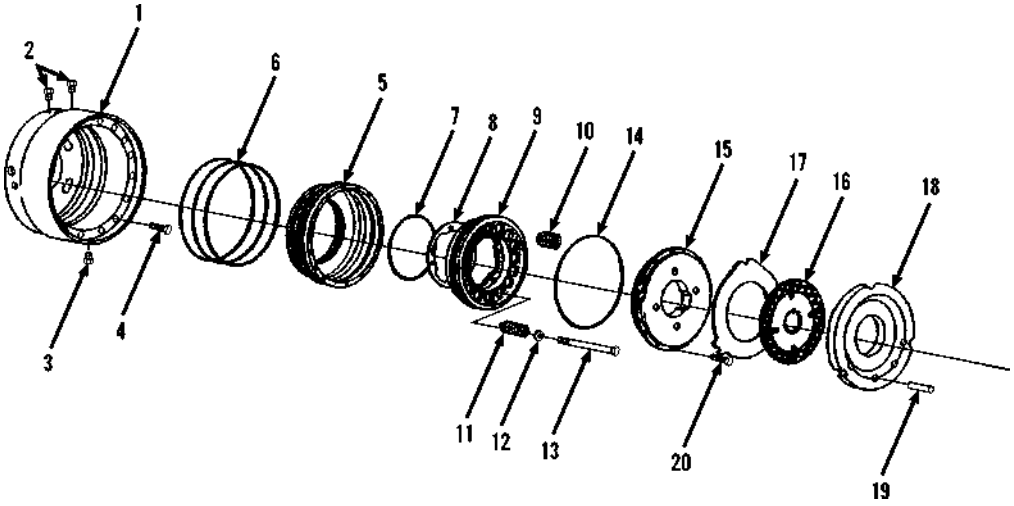

Item	Part No.	Qty.	Description Of Part
*	9114-4442	Ref	BRAKE SEAL KIT (includes items 6, 7, & 14), **(services both sides)**
*	9114-4369	Ref	BRAKE PISTON PLATE KIT (includes items 15, 16, 17 & 18), **(services one side)**
*	9114-4370	Ref	BRAKE PLATE & SEAL KIT (includes items 6, 7, 14, 15, 16, 17 & 18), **(services one side)**
*	9114-4371	Ref	PISTON BRAKE SHIM KIT (includes item 8), **(services one side)**
1	9114-4372	1	BRAKE HOUSING (right side only - left side included in center housing)
2	9114-4373	4	HYDRAULIC LINE BLEEDER
3		Ref	DRAIN PLUG (see page 6-2 for details)
4	9114-4374	3	CAPSCREW - RIGHT SIDE ONLY, M8X1.25X40.0
5	9112-4094	2	BRAKE PISTON & PLATE ASSY (includes items 6, 7, 9, 10, 14, 15, & 20)
6	9112-4110	6	O-RING
7	9112-4111	2	O-RING

Item	Part No.	Qty.	Description Of Part
8		8	SHIM (0.075) (included in shim kit)
		8	SHIM (0.125) (included in shim kit)
		8	SHIM (0.255) (included in shim kit)
		8	SHIM (0.555) (included in shim kit)
9	9114-4376	2	BRAKE PISTON
10	9114-4377	24	SPRING
11	9114-4378	16	SPRING
12	8688-1421	16	WASHER
13	9114-4379	16	RETURN SPRING BOLT
14	9112-4112	2	O-RING
15		2	BRAKE ACTUATING PLATE
16		8	FRICTION DISC
17		8	STATIONARY DISC
18		2	BRAKE REACTION PLATE
19	9114-4380	6	BRAKE DISC LOCKPIN
20	9114-4381	42	CAPSCREW, M6X1.0X12.0 (allen)

NOTE: QUANTITIES SHOWN ARE FOR BOTH SIDES.

NOTE: ONLY ITEMS WITH PART NUMBERS ARE AVAILABLE FOR SERVICE.

** Revised inclusion note on kits.*

DRIVE TRAIN
(9108-4164) Front Axle Shaft & Planetary Wheel End

Starting Serial No. 0188002
Original Issue 1-90
Revised 3-7-97

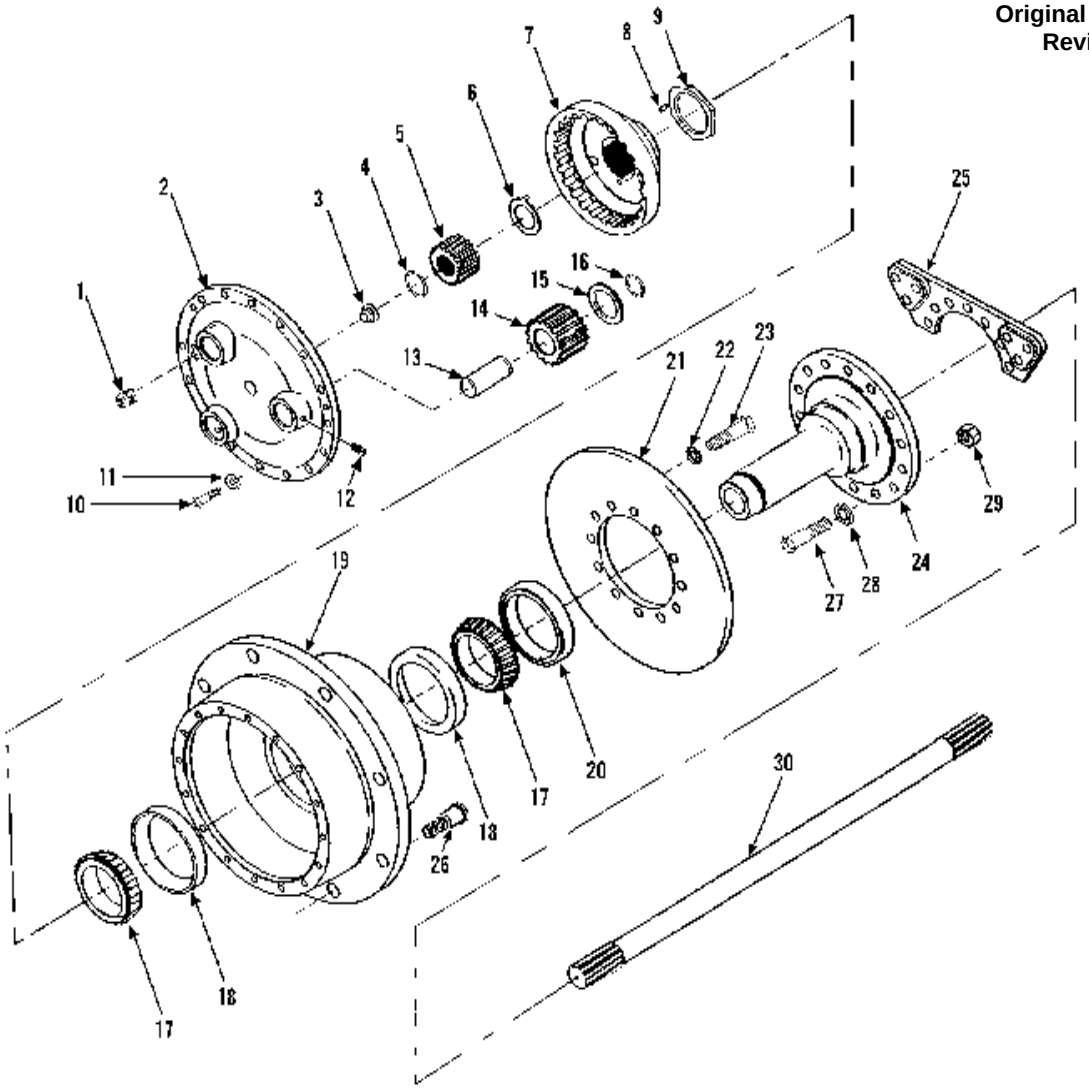

Item	Part No.	Qty.	Description Of Part
	9108-4164	2	WHEEL END ASSY (includes all items)
1	7710-4343	2	FILLER LEVEL PLUG
2	9108-4105	2	PINION SPIDER
3	9108-4106	2	THRUST BUTTON
4	9108-4107	2	SNAP RING
5	9108-4108	2	SUN GEAR
6	9108-4109	2	THRUSTWASHER
7	9108-4110	2	RING GEAR
8		2	PIN
9	9108-4111	2	ADJUSTABLE LOCKNUT (includes item 8)
10	9108-4112	32	CAPSCREW
11	9108-4113	32	WASHER
12	9108-4114	6	SET SCREW
13	9108-4115	6	PINION SHAFT
14	9108-4116	6	PINION GEAR
15	9108-4117	6	THRUSTWASHER
16	9108-4118	6	SNAP RING

Item	Part No.	Qty.	Description Of Part
17	9108-4119	2	BEARING CONE
*18	8368-4127	2	BEARING CUP (pressed into hub)
19	9108-4120	2	WHEEL HUB (includes item 18)
20	9108-4121	2	OIL SEAL
21	9108-4122	2	BRAKE DISC
22	8308-1152	24	WASHER
23	9108-4123	24	CAPSCREW
24	9108-4124	2	SPINDLE
25	9108-4125	2	BRAKE ADAPTER
26	9108-4126	24	WHEEL STUD
27	9108-4127	14	CAPSCREW
	9108-4128	14	CAPSCREW (w/o brake adapter)
28	9108-4129	28	WASHER
29	9108-4130	28	NUT
30	9108-4131	2	AXLE SHAFT
			NOTE: ONLY ITEMS WITH PART NUMBERS ARE AVAILBLE FOR SERVICE.

** Added part number to item 18 for service.*

DRIVE TRAIN
(9114-4339) (9114-4337) Left/Right Housing Assembly
(9114-4333) (9114-4335) Axle Shaft and Wheel Flange Assembly

Starting Serial No. 0388247
Original Issue 3-96
Revised 4-1-97

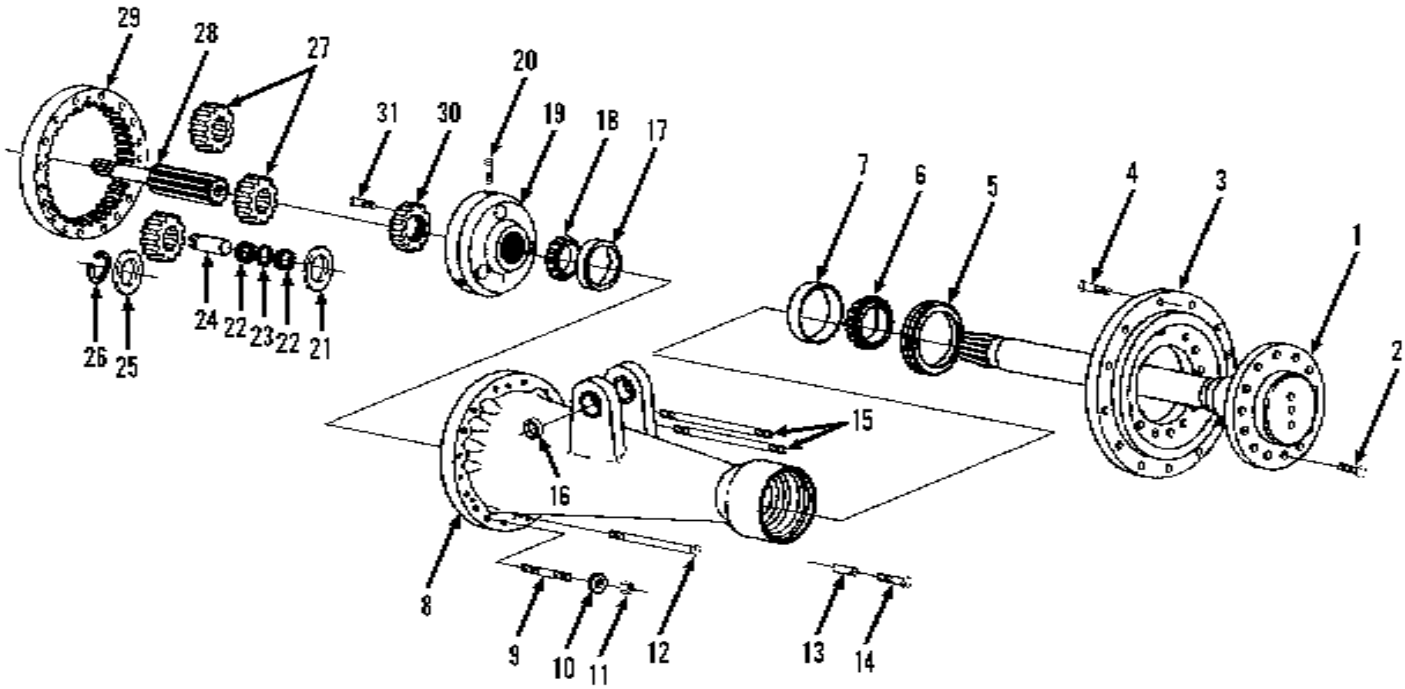

Item	Part No.	Qty.	Description Of Part
1	9114-4333	2	AXLE SHAFT ASSY (includes items 2, 3, 4 & 5)
2	9114-4334	28	CAPSCREW, M20X1.5X50.0
3	9114-4335	2	WHEEL FLANGE ASSY (includes item 4)
4	9020-3543	24	WHEEL BOLT
5	9114-4336	2	SHAFT OIL SEAL
6	8698-4451	2	BEARING CONE
7	8698-4452	2	BEARING CUP
8	9114-4337	1	HOUSING ASSY - RIGHT SIDE (shown)(includes items 7, 16 & 17)
	9114-4338	Ref	RING GEAR & HOUSING ASSY - RIGHT SIDE (shown) (includes items 7, 16, 17 & 29)
	9114-4339	1	HOUSING ASSY - LEFT SIDE (not shown) (includes items 7 & 17)
	9114-4340	Ref	RING GEAR & HOUSING ASSY - LEFT SIDE (not shown) (includes items 7, 17 & 29)
9	9114-4341	4	SET SCREW
10	9114-4342	32	WASHER
11	9114-4343	8	NUT, M14X1.5-6H
12	9114-4344	14	CAPSCREW - RIGHT SIDE, M14X1.5X212.0
	9114-4345	14	CAPSCREW - LEFT SIDE, M14X1.5X120.0
*13	9114-4346	2	SPACER - 19mm
	9114-4347	4	SPACER - 26mm

Item	Part No.	Qty.	Description Of Part
*14	9114-4348	4	CAPSCREW - USE W/26mm SPACER, M14X1.5X85 (position at 7 & 5 o'clock)
	9114-4349	2	CAPSCREW - USE W/19mm SPACER, M14X1.5X78 (position at 12 o'clock)
*15	9114-4350	2	STUD - RIGHT SIDE, M14X1.5X232.0
	9114-4351	2	STUD - LEFT SIDE, M14X1.5X112.0
16	9114-4352	2	BUSHING
17	9114-4353	2	BEARING CUP
18	9114-4354	2	BEARING CONE
19	9114-4355	2	SPIDER ASSY (includes items 20 & 24)
20	9114-4356	6	CAPSCREW, M10X23.0
21	9114-4357	6	THRUSTWASHER
22	9114-4358	6	KIT ROLLER
23	9114-4359	6	SPACER
24	9114-4360	6	PLANETARY PINION SHAFT
25	9114-4361	6	WASHER
26	9114-4362	6	SNAP RING
27	9114-4363	6	PLANETARY PINION
28	9114-4364	1	SUN GEAR (287.0mm) - RIGHT SIDE (shown)
	9114-4365	1	SUN GEAR (247.0mm) - LEFT SIDE (not shown)
29	9114-4366	2	RING GEAR
30	9114-4367	2	ADJUSTING NUT
31	9114-4368	2	CAPSCREW (adjusting nut lock)
			NOTE: QUANTITIES SHOWN ARE FOR BOTH SIDES.

** Added to descriptions on items 13 & 14, changed quantity on item 15.*

DRIVE TRAIN
(9112-3024) Rear Steering Axle Drive Hub (534C-6)

Starting Serial No. 0188002
Original Issue 1-90
Revised 2-15-07

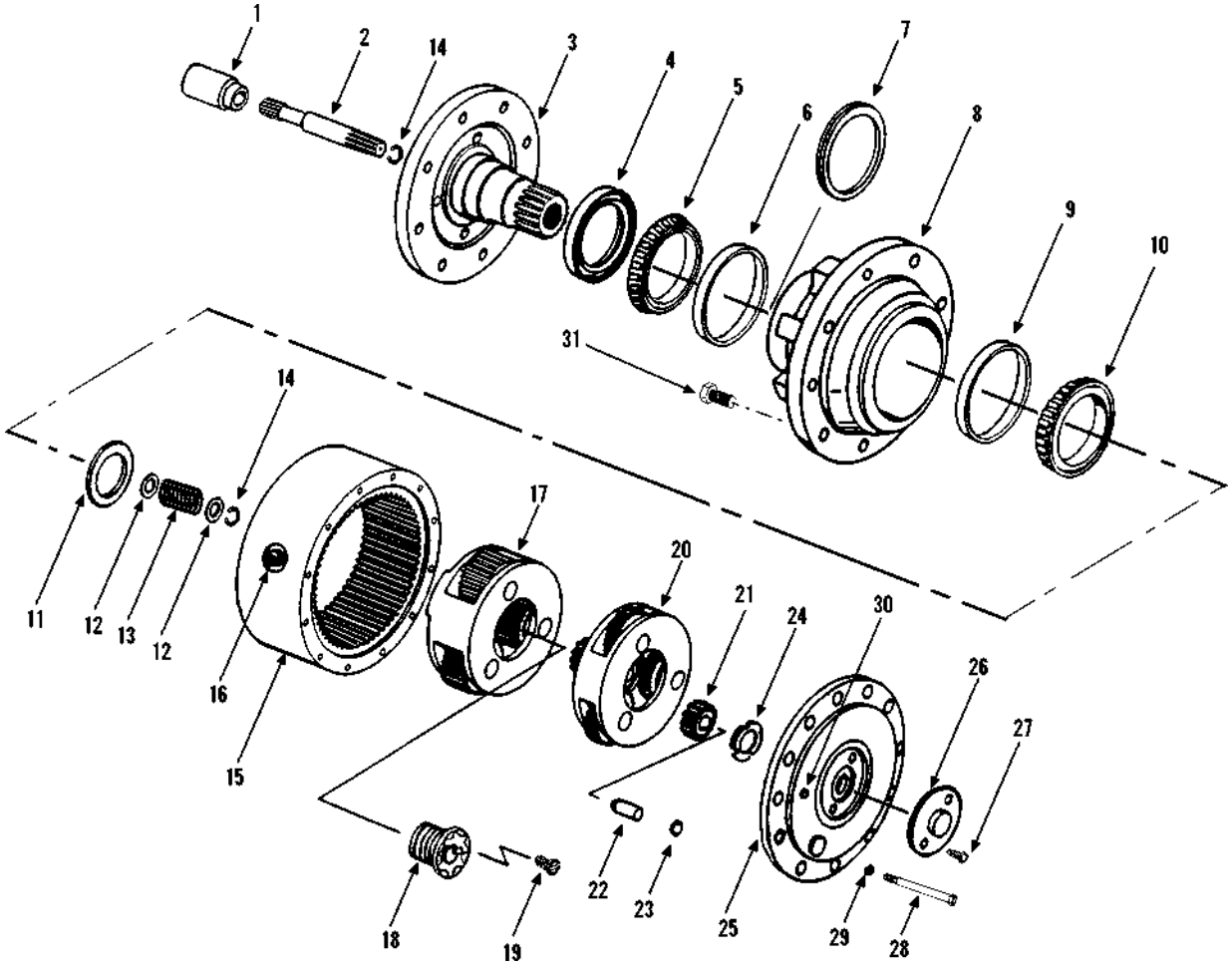

Item	Part No.	Qty.	Description Of Part
	9112-3024	1	REAR DRIVE HUB (includes all items)
	9104-4462	Ref	SEAL KIT (includes items 4, 7 & 19)
1	9112-4001	1	COUPLING
2	9112-4002	1	INPUT SHAFT
* 3		1	SPINDLE
4	9112-4004	1	OIL SEAL
5	9112-4010	1	BEARING CONE
6	9112-4009	1	BEARING CUP
7	9112-4007	1	SEAL
8	9112-4008	1	HUB
9	9112-4006	1	BEARING CUP
10	9112-4005	1	BEARING CONE
11	9112-4011	1	THRUSTWASHER
12	9112-4012	2	THRUSTWASHER
13	9112-4013	1	SPRING
14	9112-4014	2	RETAINING RING
15	9112-4015	1	RING GEAR
16	9112-4016	1	MAGNETIC PLUG
17	9112-4017	1	SECONDARY CARRIER ASSY, (includes items 18 & 19)

Item	Part No.	Qty.	Description Of Part
18	9109-4003	1	LOCKNUT
19	9106-4010	1	LOCKSCREW
20	9112-4018	1	PRIMARY CARRIER ASSY
21	9112-4019	1	PRIMARY SUN GEAR
22	9112-4020	1	DISENGAGE PLUNGER
23	9112-4021	1	O-RING
24	9104-4105	1	THRUSTWASHER
25	9112-4023	1	COVER
26	9112-4024	1	DISENGAGE COVER
27	9112-4025	2	BOLT
28	9112-4026	12	BOLT
29	9112-4027	12	FLAT WASHER
30	9112-4028	1	PIPE PLUG
31	9104-4311	12	WHEEL BOLT

NOTE: ONLY ITEMS WITH PART NUMBERS ARE AVAILABLE FOR SERVICE

** Removed part number from item 3.*

DRIVE TRAIN
(9108-3462) Rear Steering Axle Drive Hub (534C-6)

Starting Serial No. 0288568
Original Issue 1-90
Revised 2-15-07

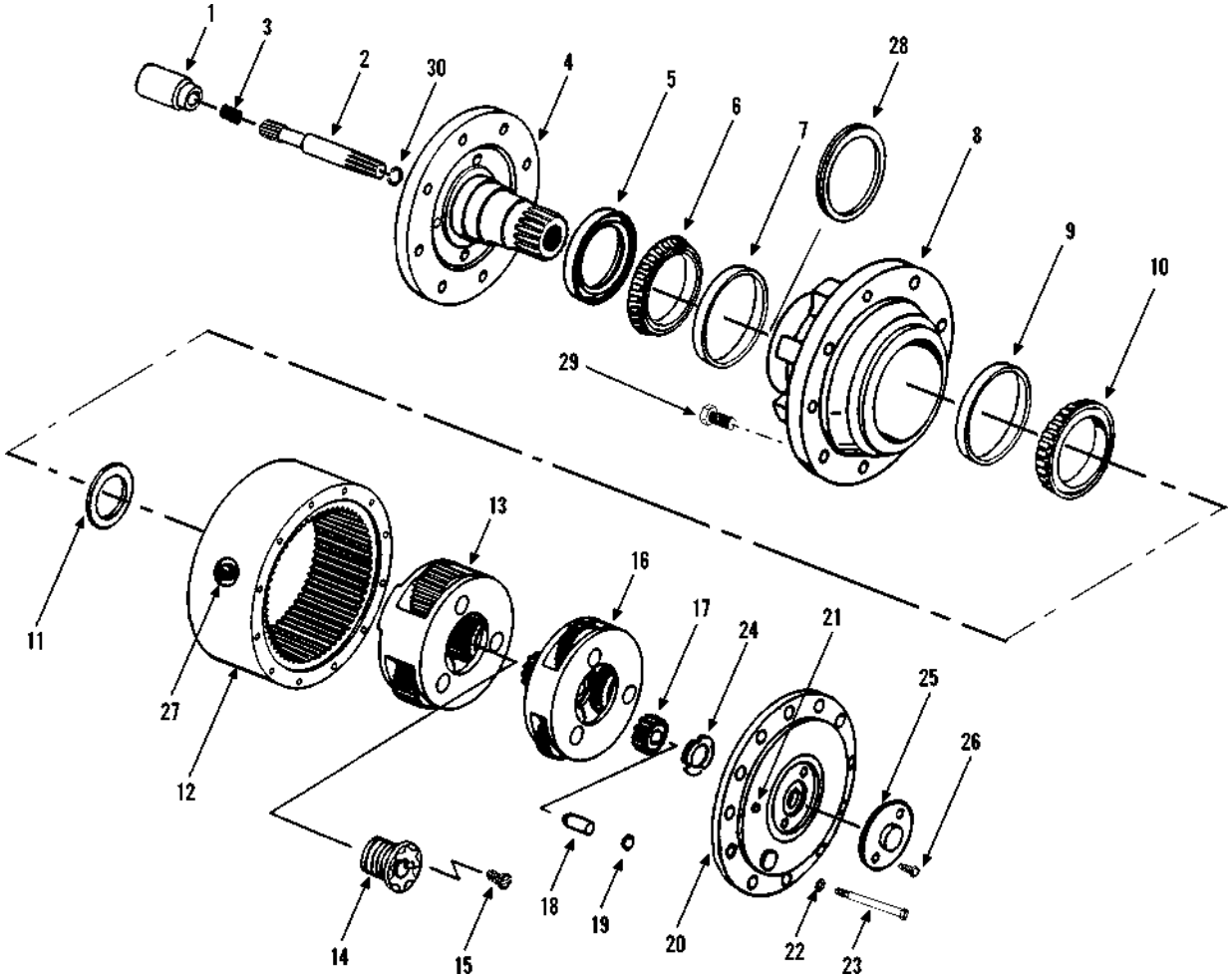

Item	Part No.	Qty.	Description Of Part
	9108-3462	1	REAR DRIVE HUB, (includes all items)
	9104-4462	Ref	SEAL KIT, (includes items 5, 15 & 28)
1	9112-4001	1	COUPLING, 8"
2	9112-4002	1	INPUT SHAFT
3	9104-4278	1	SPRING
* 4		1	SPINDLE
5		1	OIL SEAL
6	9020-2501	1	BEARING CONE
7	9020-2500	1	BEARING CUP
8	9104-4360	1	HUB
9	9106-4006	1	BEARING CUP
10	9106-4005	1	BEARING CONE
11	9106-4007	1	THRUSTWASHER
12	9104-4100	1	RING GEAR
13	9104-4282	1	SECONDARY CARRIER ASSY, (includes items 14 & 15)
14	9109-4003	1	LOCKNUT
15	9106-4010	1	LOCKSCREW
16	9104-4103	1	PRIMARY CARRIER ASSY

Item	Part No.	Qty.	Description Of Part
17	9104-4104	1	PRIMARY SUN GEAR
18	9104-4106	1	DISENGAGE PLUNGER
19	9104-4107	1	O-RING
20	9104-4109	1	COVER
21	9104-4361	1	PIPE PLUG
22	9112-4027	12	FLAT WASHER
23	9104-4111	12	HEX HD CAPSCREW, 3/8-16
24	9104-4105	1	THRUSTWASHER
25	9104-4112	1	DISENGAGE COVER
26	9104-4113	2	HEX HD BOLT, 5/16-18X1/2
27	9104-4101	1	MAGNETIC PLUG
28		1	SEAL
29	9104-4311	12	WHEEL BOLT
30	9104-4099	1	RETAINING RING

NOTE: ONLY ITEMS WITH PART NUMBERS ARE AVAILABLE FOR SERVICE.

** Removed part number from item 4.*

DRIVE TRAIN
(9112-3145) Rear Steering Axle Drive Hub
Starting Serial No. 0488332
Original Issue 11-97

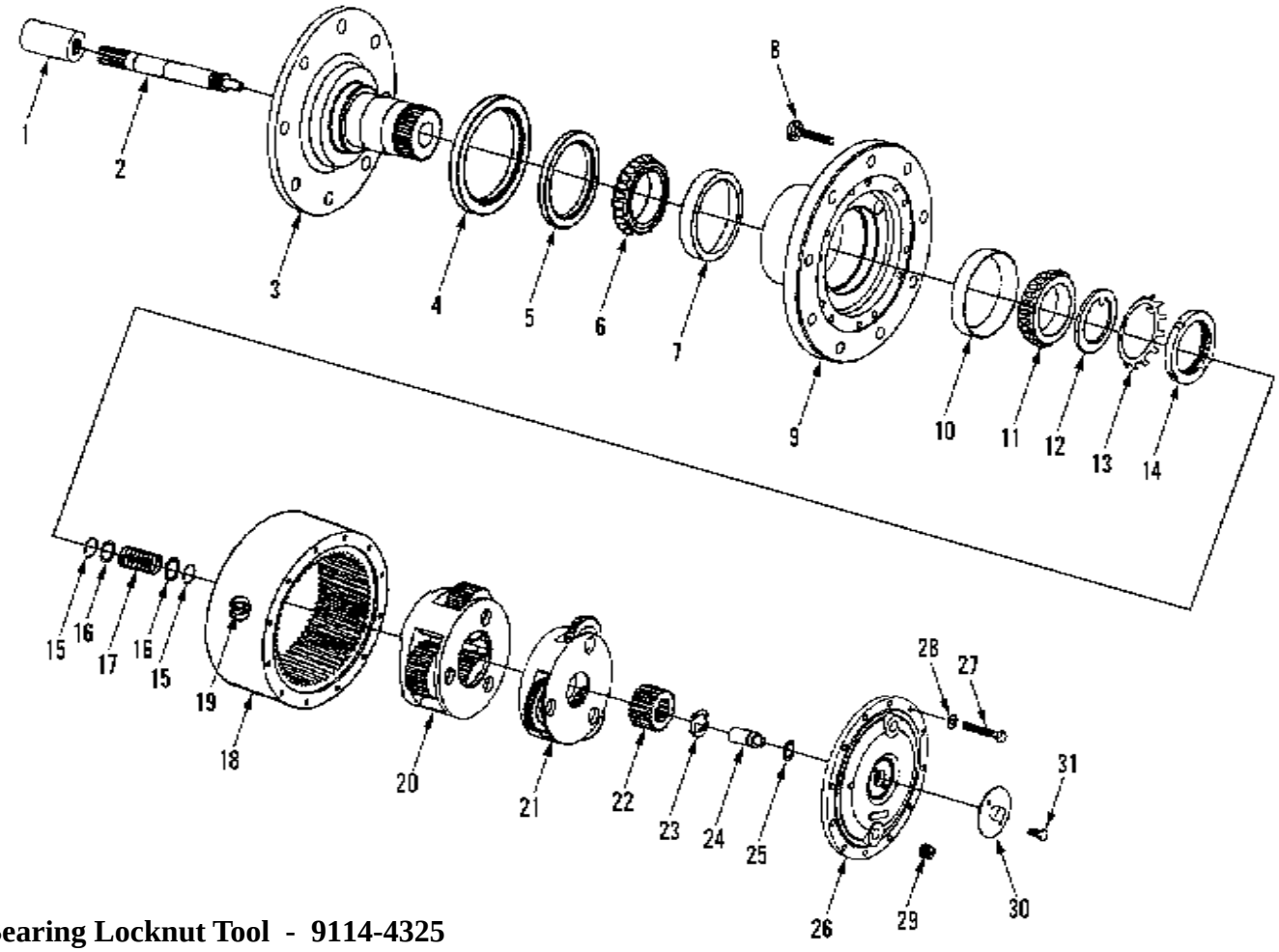

Bearing Locknut Tool - 9114-4325

Item	Part No.	Qty.	Description Of Part
	9112-3145	2	REAR DRIVE HUB (includes all items)
		Ref	SEAL KIT
1	9112-4001	1	COUPLING, 8"
2	9112-4113	1	INPUT SHAFT
3	9112-4114	1	SPINDLE
4	9112-4007	1	BOOT SEAL
5	9112-4004	1	OIL SEAL
6	9112-4010	1	BEARING CONE
7	9112-4009	1	BEARIN G CUP
8	9104-4311	12	WHEEL BOLT, 3/4-16
9	9114-4178	1	HUB
10	9114-4179	1	BEARING CUP
11	9114-4180	1	BEARING CONE
12	9114-4181	1	THRUSTWASHER
13	9114-4182	1	LOCKWASHER
14	9114-4183	1	BEARING LOCKNUT
15	9112-4014	2	RETAINING RING
16	9103-4390	2	THRUSTWASHER
17	9114-4175	1	DISENGAGE SPRING

Item	Part No.	Qty.	Description Of Part
18	9114-4184	1	RING GEAR
19	9104-4101	1	MAGNETIC PLUG
20	9114-4185	1	SECONDARY CARRIER ASSY
21	9114-4186	1	PRIMARY CARRIER ASSY
22	9114-4187	1	PRIMARY SUN GEAR
23	9104-4105	1	THRUSTWASHER
24	9104-4106	1	PLUNGER
25	9104-4107	1	O-RING
26	9114-4188	1	COVER
27	9114-4189	12	HEX HD BOLT, GR8
28	9112-4027	12	FLAT WASHER
29	9112-4028	1	PIPE PLUG
30	9112-4024	1	DISENGAGE COVER
31	9112-4025	2	HEX HD BOLT
			NOTE: ONLY ITEMS WITH PART NUMBERS ARE AVAILABLE FOR SERVICE.
			QUANTITIES SHOWN ARE FOR ONE HUB ASSEMBLY ONLY.

DRIVE TRAIN
(9109-3006) Rear Steering Axle Non-Drive Hub (532C-6)

Starting Serial No. 0188002
Original Issue 1-90
Revised 9-20-95

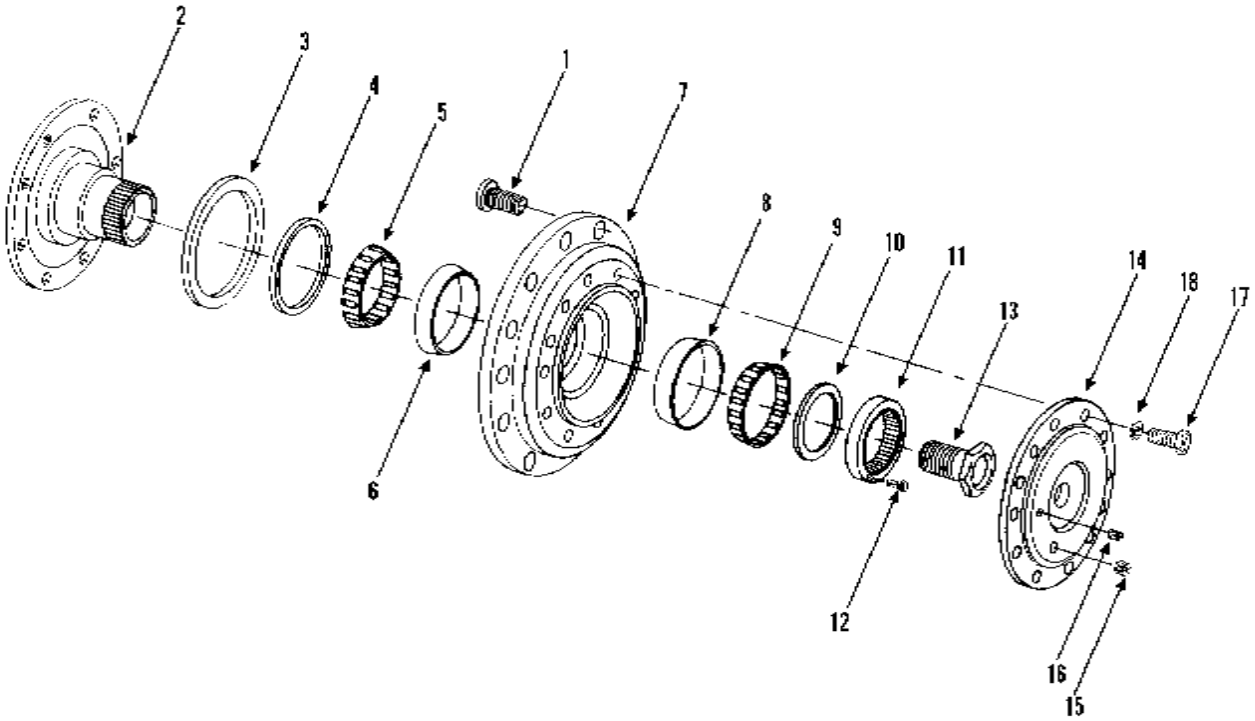

Item	Part No.	Qty.	Description Of Part
	9109-3006		NON-DRIVING HUB ASSY (includes all items)
1	9104-4311	12	WHEEL BOLT
2	9109-4008	1	OUTPUT SHAFT
3	9112-4007	1	SEAL BOOT
4	9112-4004	1	OIL SEAL
5	9112-4010	1	BEARING CONE
6	9112-4009	1	BEARING CUP
7	9112-4008	1	HUB
8	9112-4005	1	BEARING CONE
9	9112-4006	1	BEARING CUP
10	9112-4011	1	THRUSTWASHER
11	9109-4004	1	SPLINED SPACER
12	9109-4015	1	LOCKSCREW
13	9109-4003	1	LOCKNUT
14	9109-4001	1	COVER
15	9112-4016	1	MAGNETIC PLUG
16	9112-4028	1	PIPE PLUG
17	9109-4013	12	HEX HD BOLT
18	9112-4027	12	WASHER

** Changed upper left corner to designate model more clearly.*

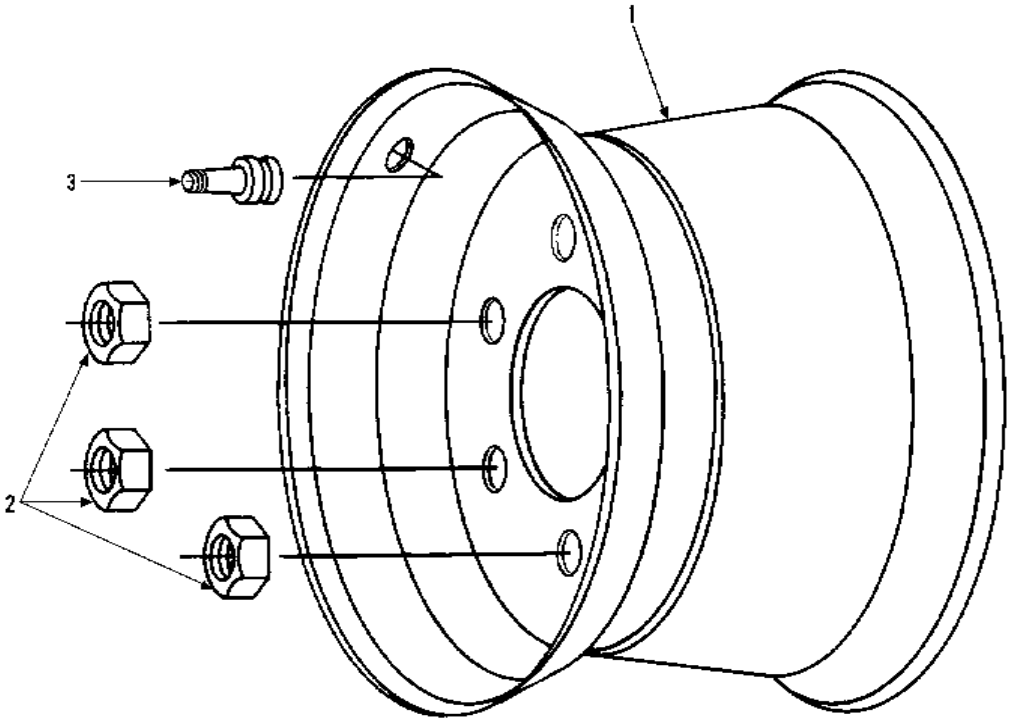

Item	Part No.	Qty.	Description Of Part
	9112-5002	1	R.H. TIRE ASSY (includes items 1, 3 & 4)
	9112-5003	1	L.H. TIRE ASSY (includes items 1, 3 & 4)
1	9104-3298	1	WHEEL
2	9104-3146	12	LUG NUT
3	9108-3385	1	VALVE
4	9103-3104	1	TUBE (not illustrated)

** Changed upper left corner to designate model more clearly.*

CONTROLS
Tilt & Sway

Starting Serial No. 0188002
Original Issue 1-90
Revised 9-20-95

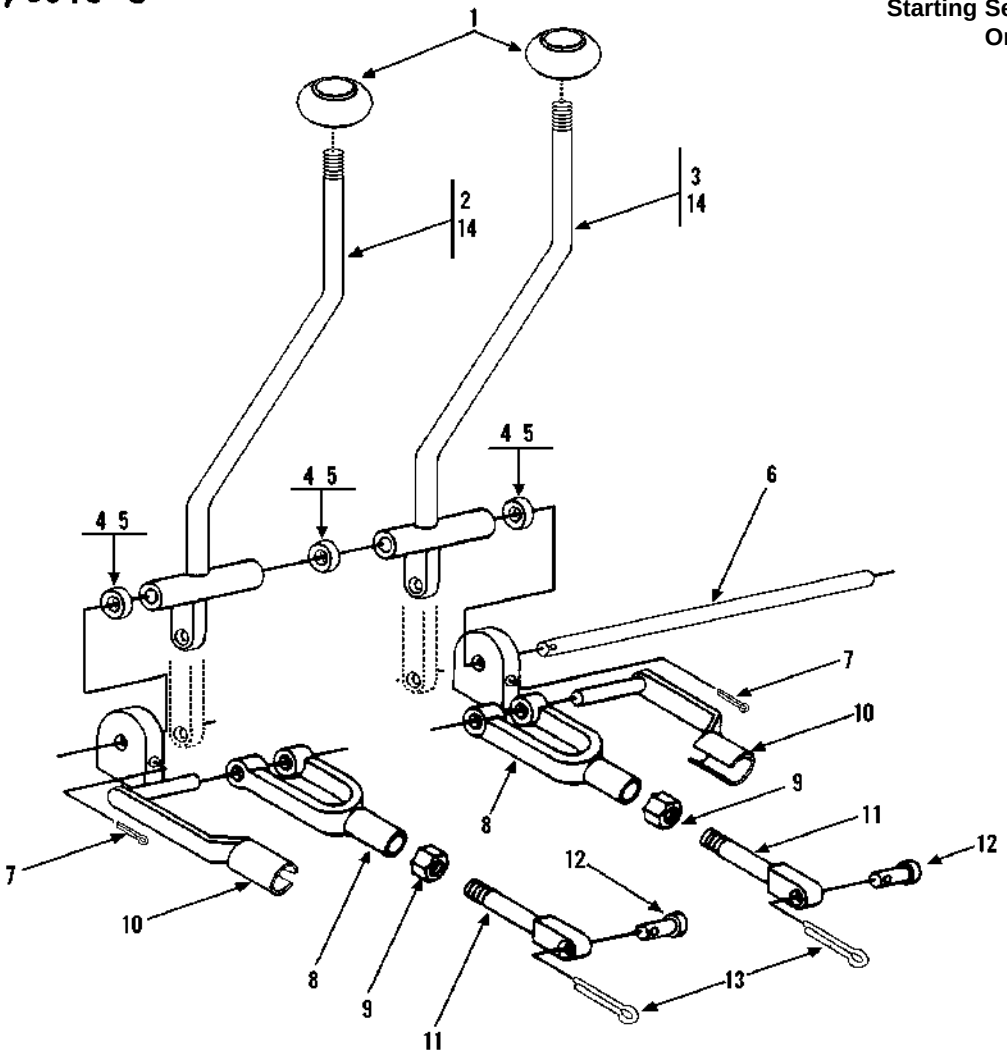

Item	Part No.	Qty.	Description Of Part
1	9020-0638	2	KNOB
2	9108-6111	1	LEVER ASSY, SWAY
3	9108-6112	1	LEVER ASSY, TILT
4	9002-8662	3	WAVE BEND WASHER
* 5	8856-1113	9	FLAT WASHER, 5/8
6	9108-1354	1	SHAFT
7	8863-1338	1	COTTER PIN, 3/16X1-3/4
8	8882-1004	2	YOKE END
9	8850-1406	2	HEX JAM NUT, 3/8-24
10	9002-7987	2	SPRING CLEVIS
11	9108-6081	2	ROD LINKAGE
12	9002-1552	2	CLEVIS PIN
13	8863-1301	2	COTTER PIN, 1/16X1/2
14	9108-3136	4	BUSHING

** Changed upper left corner to designate model more clearly. Changed quantiity on item 5.*

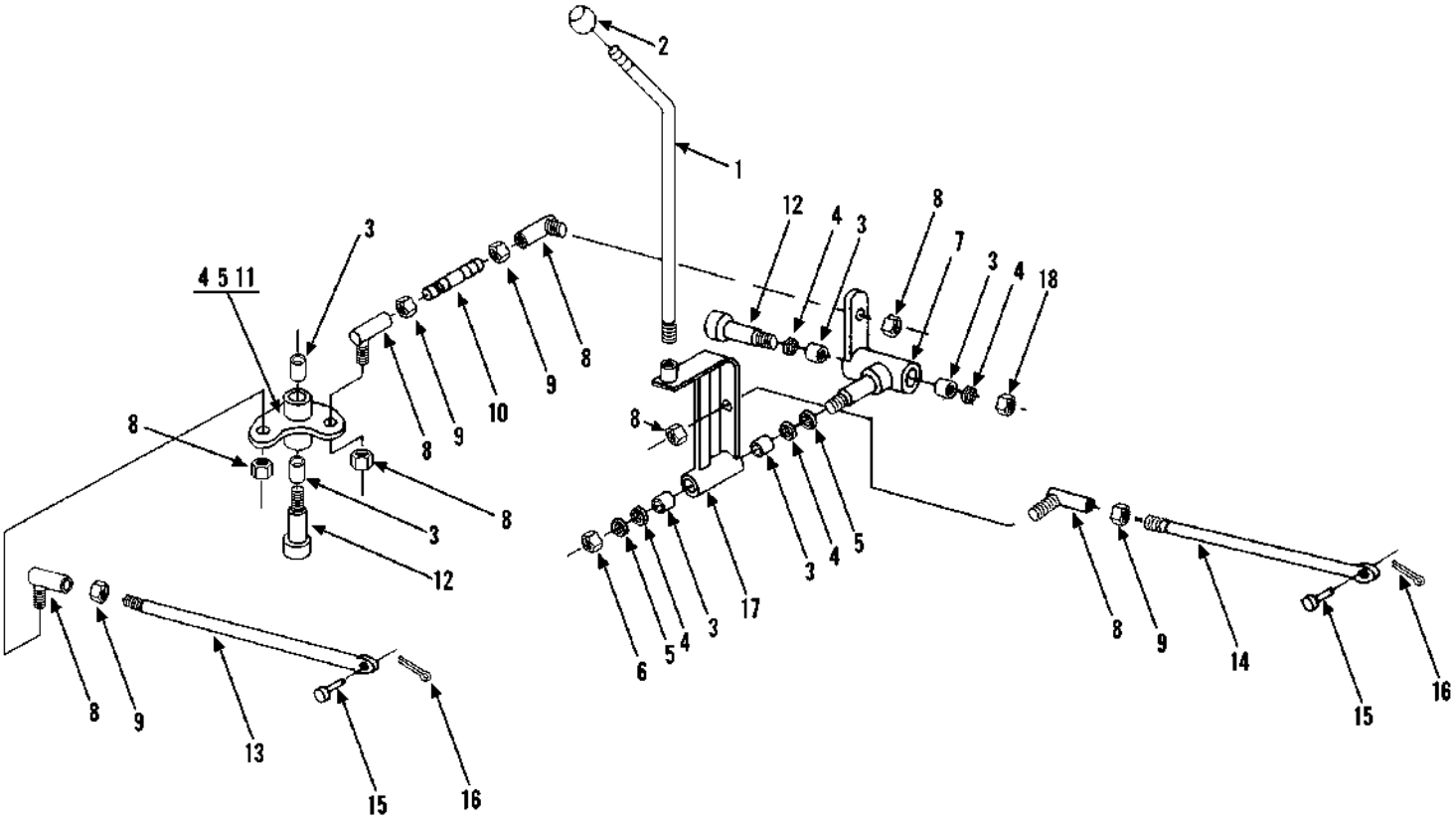

Item	Part No.	Qty.	Description Of Part
1	9108-6113	1	HANDLE WELDMENT
2	9020-0638	1	KNOB
3	9108-3136	6	BUSHING
4	9002-8662	6	WAVE BEND WASHER
5	8856-1113	9	FLAT WASHER, 5/8
6	8850-1008	1	HEX NUT, 1/2-13
7	9108-6064	1	BELLCRANK
8	9020-0406	3	BALL JOINT
9	8850-1406	4	HEX JAM NUT, 3/8-24

Item	Part No.	Qty.	Description Of Part
10	9040-0543	1	ROD LINKAGE
11	9108-6031	1	BELLCRANK
12	9020-3502	2	SOCKET HD SHOULDER BOLT
13	9106-6021	1	LINKAGE ROD
14	9106-6020	1	LINKAGE ROD
15	9002-1552	2	CLEVIS PIN
16	8863-1301	2	COTTER PIN, 1/16X1/2
17	9108-6063	1	BELLCRANK
18	8850-1108	1	HEX JAM NUT, 1/2-13

** Changed upper left corner to designate model more clearly.*

CONTROLS
Accelerator Linkage
Starting Serial No. 0188002
Original Issue 1-90
Revised 6-29-99

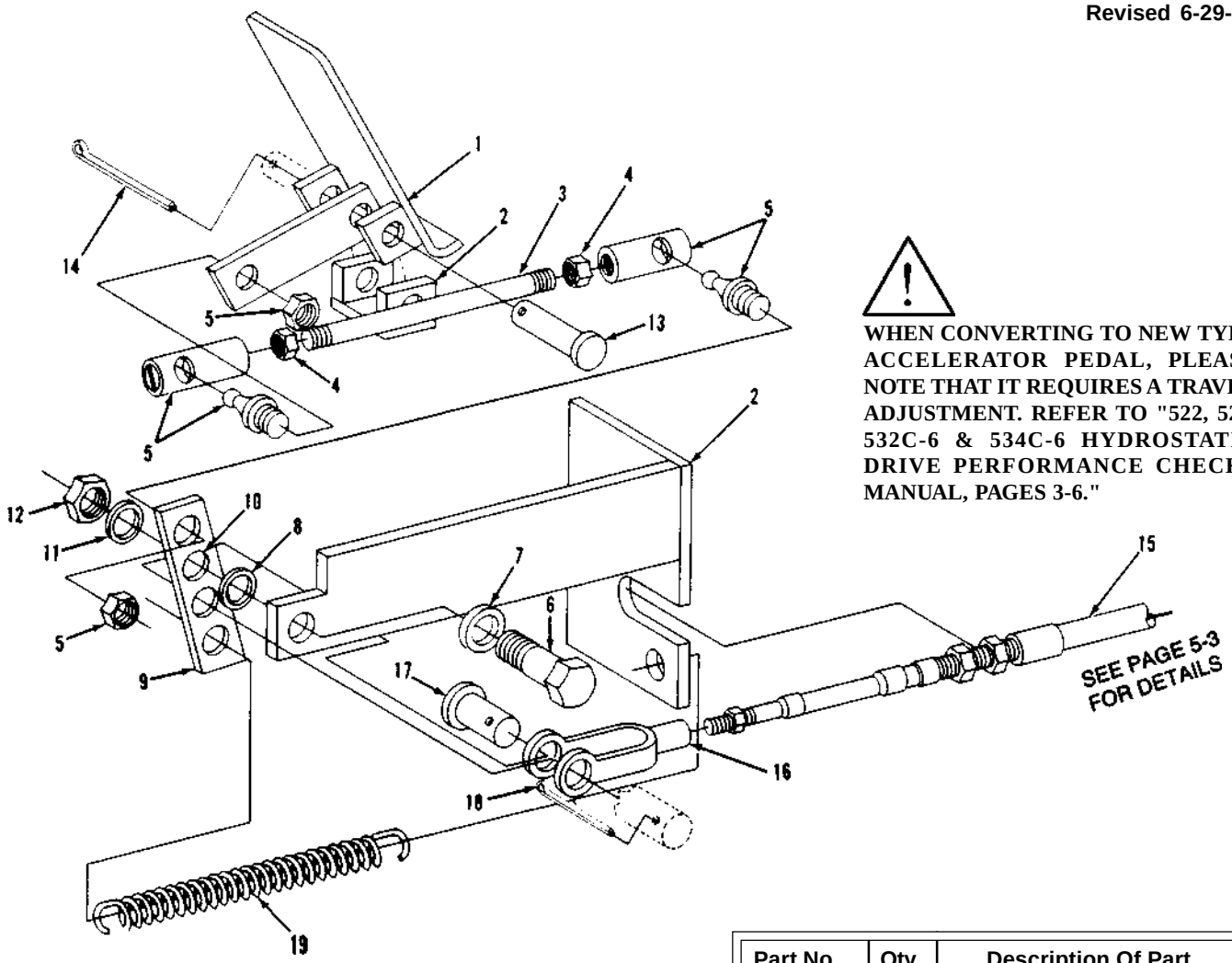

WHEN CONVERTING TO NEW TYPE ACCELERATOR PEDAL, PLEASE NOTE THAT IT REQUIRES A TRAVEL ADJUSTMENT. REFER TO "522, 524, 532C-6 & 534C-6 HYDROSTATIC DRIVE PERFORMANCE CHECKS MANUAL, PAGES 3-6."

Part No.	Qty.	Description Of Part
9114-3118	1	ACCELERATOR PEDAL
9108-3404	1	THROTTLE CABLE
9112-1210	1	THROTTLE CABLE SUPPORT
8820-1003	5	HEX HD CAPSCREW
8856-1107	1	FLAT WASHER
8855-1009	5	LOCKWASHER
8850-1004	5	HEX NUT
9002-7908	1	BALL JOINT
8850-1613	1	HEX NUT
9002-8977	1	YOKE END
9002-1552	1	CLEVIS PIN

PARTS LISTED IN UPPER BOX ARE PARTS THAT SHOULD BE USED IF CONVERTING TO NEW STYLE ACCELERATOR PEDAL. SEE FOLLOWING PAGE FOR MORE DETAILS.

Item	Part No.	Qty.	Description Of Part	Item	Part No.	Qty.	Description Of Part
* 1	9108-6146	1	ACCELERATOR PEDAL WELDMENT	10	9103-3281	1	BEARING (not shown)
* 2	9108-6145	1	FLOOR PLATE WELDMENT	11	8856-1109	1	FLAT WASHER, 3/8
3	9103-1088	1	ROD	12	8850-1105	1	HEAVY HEX JAM NUT, 5/16-18
4	8850-1404	4	HEX JAM NUT, 1/4-28	13	9108-1664	1	CLEVIS PIN
5	8668-3118	2	BALL JOINT	14	8863-1310	1	COTTER PIN, 3/32X1
6	8825-1018	1	SOCKET HD SHOULDER SCREW, 3/8X1/2	15	9108-3404	1	THROTTLE CABLE
				16	9002-8977	1	YOKE
7	9002-8946	2	WAVE BEND WASHER	17	8863-3001	1	YOKE PIN, 1/4
8	8856-1111	1	FLAT WASHER, 1/2	18	8863-1301	1	COTTER PIN, 1/16X1/2
9	9103-1087	1	BELLCRANK	19	9020-7801	1	SPRING

** Revised artwork, changed description on item 1, changed part number and description on item 2.*

CONTROLS
(9114-3118) Accelerator Pedal Assembly

Starting Serial No. 0288777
Original Issue 10-95
Revised 1-18-02

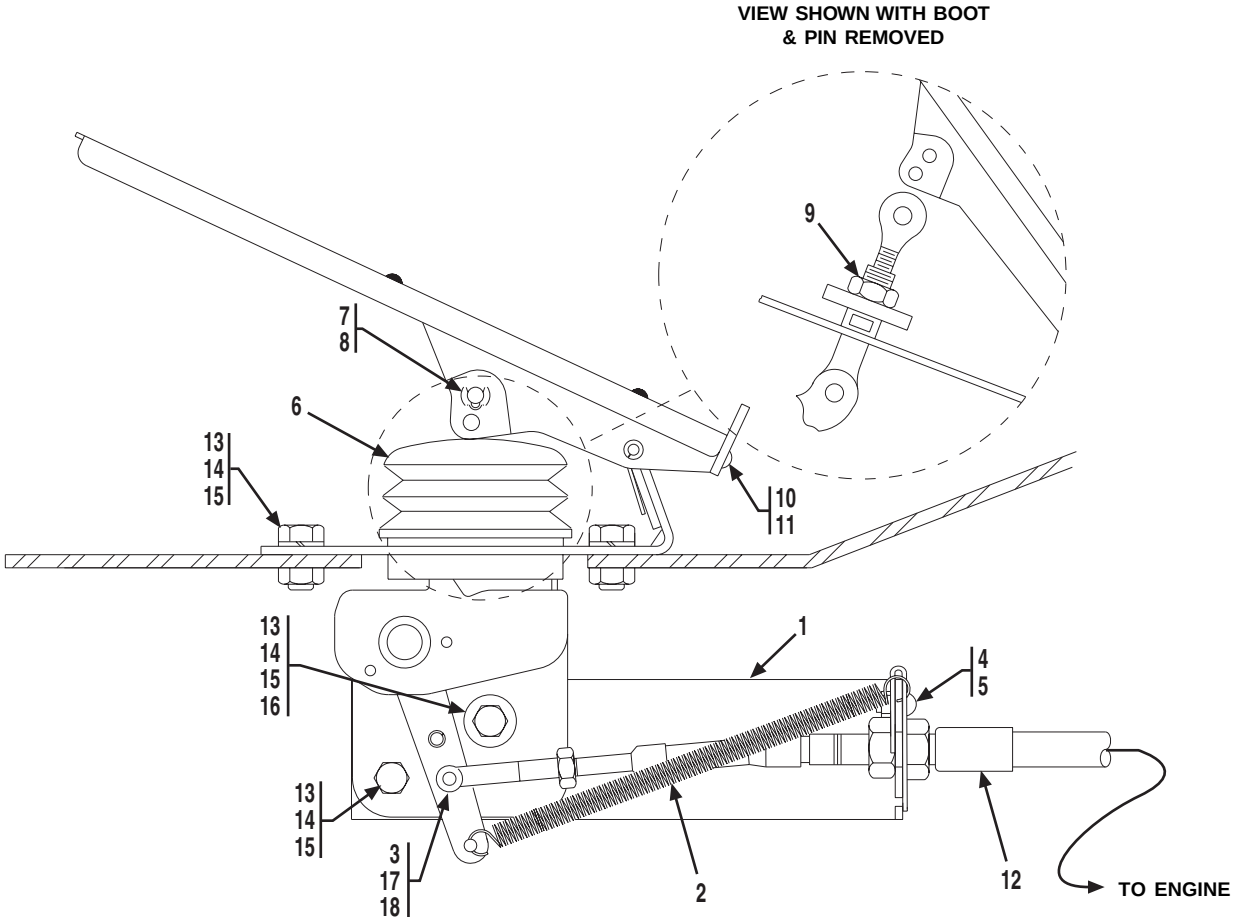

THIS ASSEMBLY COMES WITH A DIFFERENT CABLE SUPPORT, (item 1, not shown). THE CABLE SUPPORT SHOWN IS THE PROPER REPLACEMENT AND NEEDS TO BE ORDERED SEPARATELY.

Item	Part No.	Qty.	Description Of Part
	9114-3118	1	ACCELERATOR PEDAL ASSY, (includes items 3 thru 11)
*	9114-4196	1	CABLE ATTACH KIT, (includes items 3 thru 5), (discard clevis and clevis pin, not shown, and replace with items 17 & 18)
	9114-4197	1	BOOT KIT, (includes items 6 thru 9)
	9114-4198	1	HEEL REST KIT, (includes items 10 & 11)
1	9112-1210	1	THROTTLE CABLE SUPPORT
* 2	9020-7801	1	SPRING
* 3		1	HAIRPIN COTTER
4		1	LOCK PLATE
5		1	CAPSCREW
6		1	BOOT
7		1	PIN
8		1	HAIRPIN COTTER

Item	Part No.	Qty.	Description Of Part
9		1	JAM NUT
10		1	HEEL REST
11		2	SCREW, (self tap)
12		Ref	THROTTLE CABLE, (see pages 5-1 & 5-3 for details)
13	8820-1003	5	HEX HD CAPSCREW, 1/4-20X3/4, GR5
14	8855-1009	5	LOCKWASHER, 1/4
15	8850-1004	5	HEX NUT, 1/4-20
16	8856-1107	1	FLAT WASHER, 1/4
*17	9002-8977	1	CLEVIS
*18	9002-1552	1	CLEVIS PIN

NOTE: ONLY ITEMS WITH PART NUMBERS ARE AVAILABLE FOR SERVICE.

** Revised illustration, inclusion note on Cable Attach Kit and items 2, 3 & 17; added item 18.*

CONTROLS
(9114-3342) Accelerator Pedal Assembly
Starting Serial No. 0488238
Original Issue 8-97
Revised 1-18-02

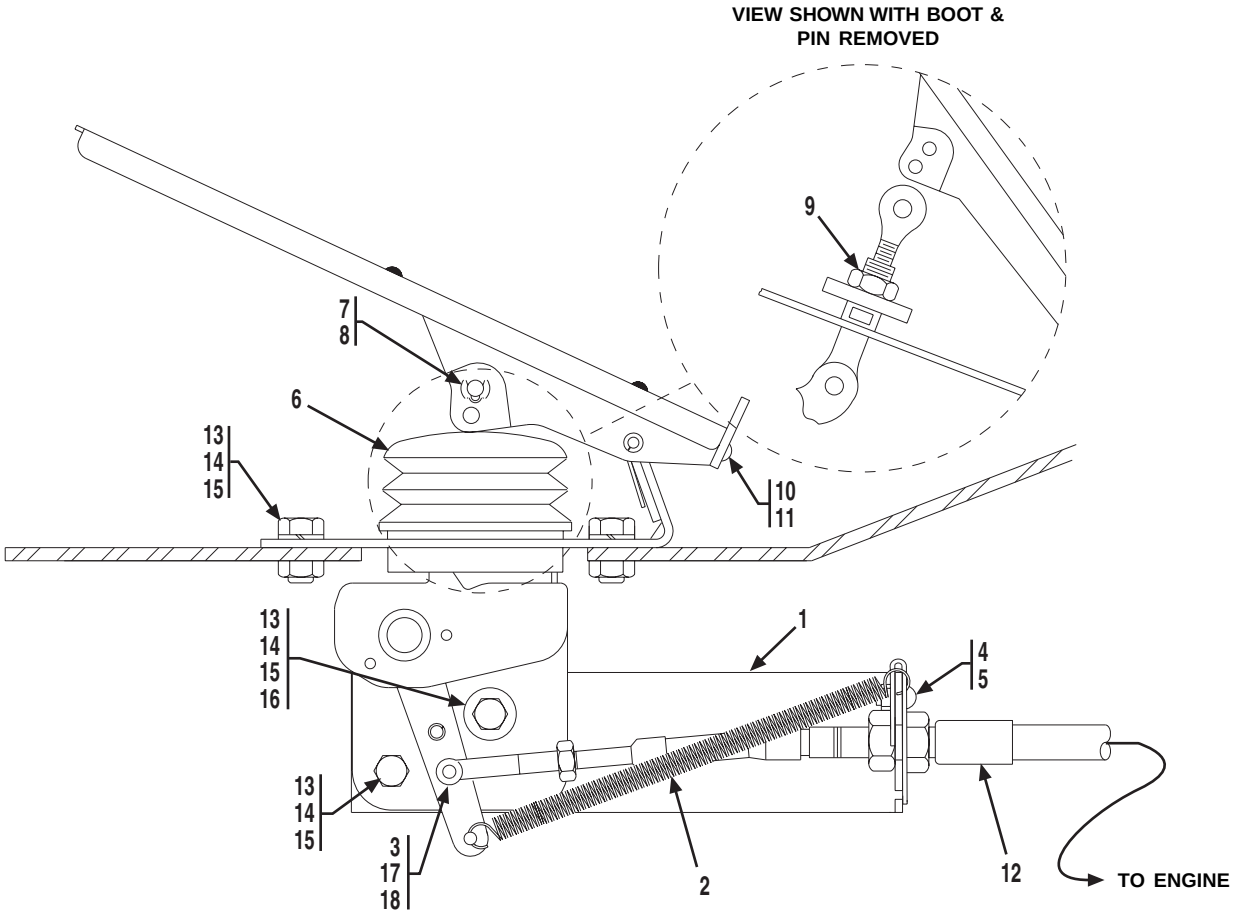

THIS ASSEMBLY COMES WITH A DIFFERENT CABLE SUPPORT, (item 1, not shown). THE CABLE SUPPORT SHOWN IS THE PROPER REPLACEMENT AND NEEDS TO BE ORDERED SEPARATELY.

Item	Part No.	Qty.	Description Of Part
	9114-3342	1	ACCELERATOR PEDAL ASSY, (includes items 3 thru 11)
*	9114-4432	1	CABLE ATTACH KIT, (includes items 3 thru 5), (discard clevis and clevis pin, not shown, and replace with items 17 & 18)
	9114-4197	1	BOOT KIT, (includes items 6 thru 9)
*	9114-4433	1	HEEL REST KIT, (includes items 10 & 11)
1	9112-1210	1	THROTTLE CABLE SUPPORT
* 2	9020-7801	1	SPRING
* 3		1	HAIRPIN COTTER
4		1	LOCK PLATE
5		1	CAPSCREW
6		1	BOOT
7		1	PIN
8		1	HAIRPIN COTTER

Item	Part No.	Qty.	Description Of Part
9		1	JAM NUT
10		1	HEEL REST
11		2	SCREW, (self tap)
12		Ref	THROTTLE CABLE, (see pages 5-1 & 5-3 for details)
13	8820-1003	5	HEX HD CAPSCREW, 1/4-20X3/4, GR5
14	8855-1009	5	LOCKWASHER, 1/4
15	8850-1004	5	HEX NUT, 1/4-20
16	8856-1107	1	FLAT WASHER, 1/4
*17	9002-8977	1	CLEVIS
*18	9002-1552	1	CLEVIS PIN
			NOTE: ONLY ITEMS WITH PART NUMBERS ARE AVAILABLE FOR SERVICE.

** Revised illustration, Cable Attach Kit, part number on Heel Rest Kit and items 2, 3 & 17; added item 18.*

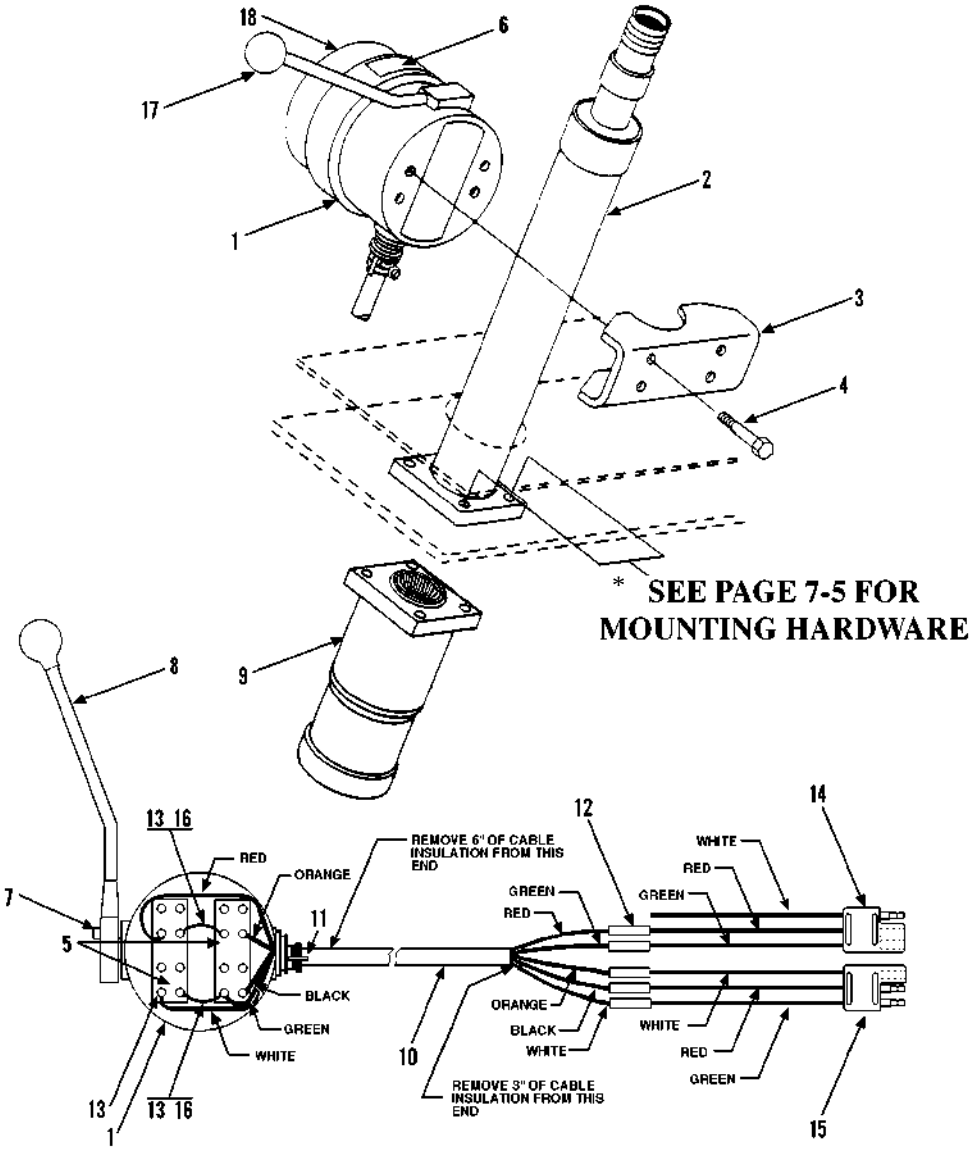

Item	Part No.	Qty.	Description Of Part
	9108-5025	1	REVERSING MASTER SWITCH ASSY (includes items 1, 5, 6, 7, 8 & 10 thru 17)
1	9108-3081	1	REVERSING MASTER SWITCH (includes items 5 , 6 & 8)
2		Ref	STEERING COLUMN (see page 7-5 for details)
3	9108-1264	1	SHIFT BRACKET
4	8820-1008	4	HEX HD CAPSCREW, 1/4-20X1-3/4, GR5
5	9108-4268	2	FORWARD/REVERSE SWITCH
6	9108-3428	1	FORWARD/REVERSE DECAL
7	9108-3491	1	GASKETED SCREW
8	9108-4345	1	HANDLE ASSY W/KNOB
9		Ref	STEERING ORBITROL, (see page 10-23 for details)

Item	Part No.	Qty.	Description Of Part
10		30"	MULTIPLE CONUCTOR CABLE, 16 GAUGE, 5 WIRE
11	9108-3235	1	ROMEX CONNECTOR
12	8668-3480	5	BUTT CONNECTOR
13	8903-1196	5	PRESSURE TERMINAL
14	8348-3113	1	3-WAY CONNECTOR (female)
15	8348-3114	1	3-WAY CONNECTOR (male)
16		4"	BUS BAR WIRE
17	9108-4240	1	KNOB
*18	9114-4447	1	END COVER
			NOTE: ONLY ITEMS WITH PART NUMBERS ARE AVAILABLE FOR SERVICE.

** Added item 18.*

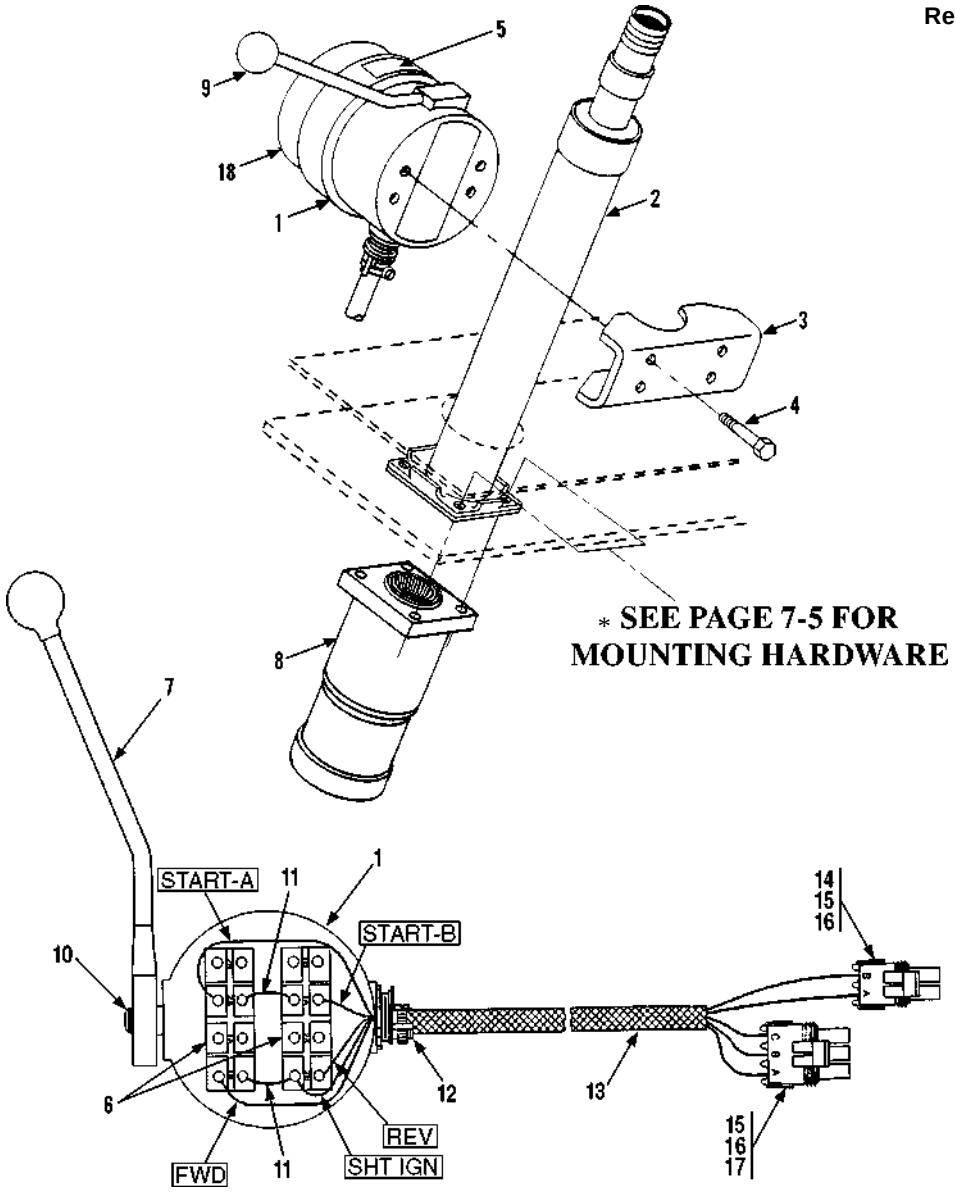

Item	Part No.	Qty.	Description Of Part
	9114-5030	1	REVERSING MASTER SWITCH ASSY (includes items 1, 5, 6, 7 & 9 thru 18)
1	9108-3081	1	REVERSING MASTER SWITCH (includes items 5, 6 & 7)
2		Ref	STEERING COLUMN (see page 7-5)
3	9108-1264	1	SHIFT BRACKET
4	8820-1008	4	HEX HD CAPSCREW, 1/4-20X1-3/4, GR5
5	9108-3428	1	FORWARD/REVERSE DECAL
6	9108-4268	2	FORWARD/REVERSE SWITCH
7	9108-4345	1	HANDLE ASSY W/KNOB
8		Ref	STEERING ORBITROL, (see page 10-23 for details)
9	9108-4240	1	KNOB
10	9108-3491	1	GASKETED SCREW

Item	Part No.	Qty.	Description Of Part
11		4"	BUS BAR WIRE
12	9108-3235	1	ROMEX CONNECTOR
13	9114-3134	1	FWD/REV HARNESS (includes items 14 thru 17)
14	8096-3057	1	2-WAY CONNECTOR (tower end) (includes 2 of items 15 and 16)
15	8096-3068	5	FEMALE PIN TERMINAL
16	8096-3066	5	CABLE SEAL
17	8096-3059	1	3-WAY CONNECTOR (tower end) (includes 3 of items 15 and 16)
18	9114-4447	1	END COVER
			NOTE: ONLY ITEMS WITH PART NUMBERS ARE AVAILABLE FOR SERVICE.

* *Revised illustration.*

NOTE: When ordering item 9, replace screws provided from vendor with item 11.

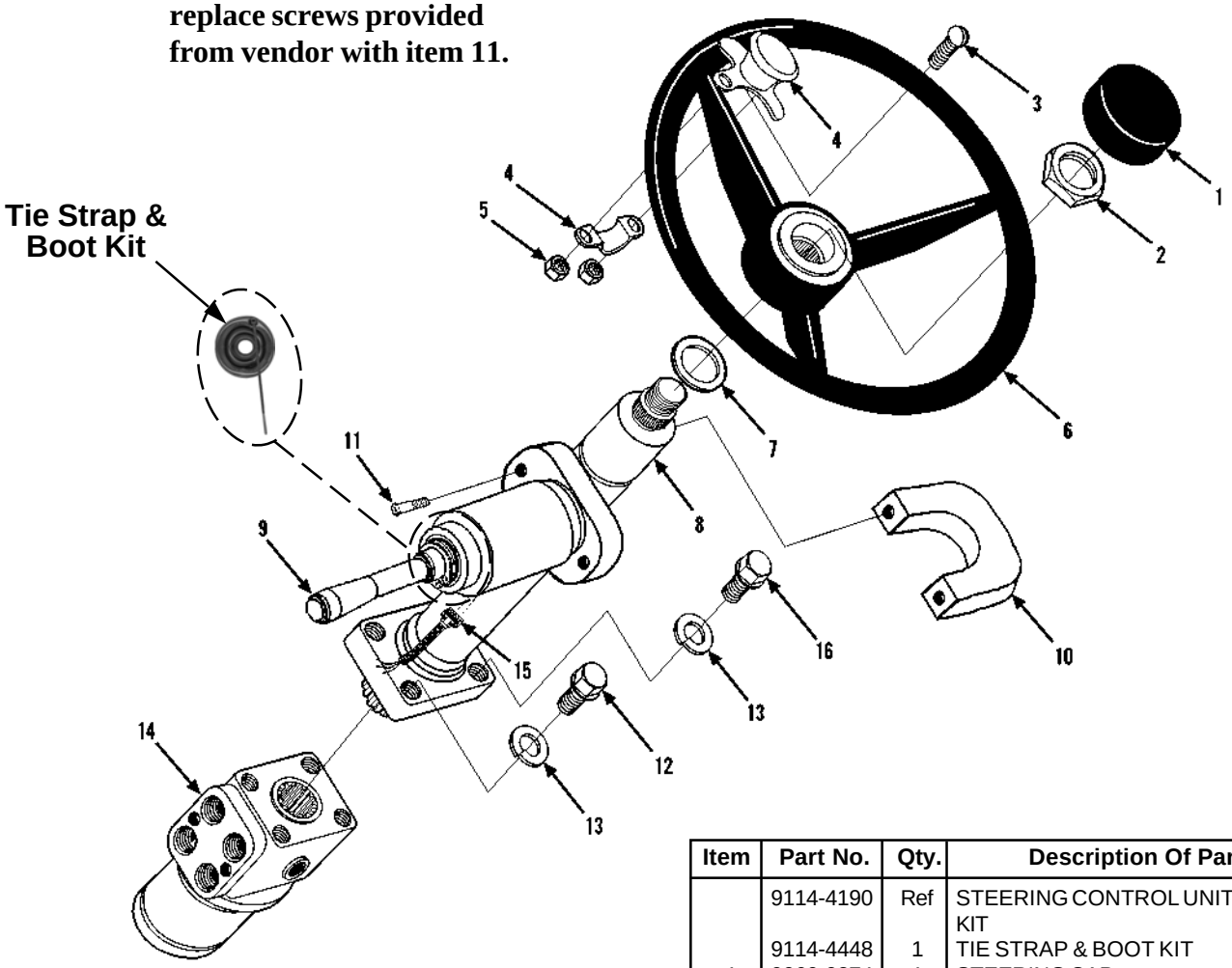

Item	Part No.	Qty.	Description Of Part
	9114-4190	Ref	STEERING CONTROL UNIT SEAL KIT
	9114-4448	1	TIE STRAP & BOOT KIT
1	9060-0274	1	STEERING CAP
2	9114-4191	1	STEERING WHEEL NUT
3	8830-1311	2	FLAT HD MACHINE SCREW, 1/4-20 x 1
4	9020-2230	1	SPINNER KNOB
5	8850-1616	2	HEX NUT, 1/4-20
6	9060-0273	1	STEERING WHEEL
7	9114-4192	1	WASHER
8	9116-3012	1	STEERING COLUMN (includes items 2 & 7)
9	9136-3025	1	F/N/R SHIFTER (includes item 10)
* 10	9114-4458	1	CLAMP SET
11	8319-1059	2	HEX HD CAPSCREW, M5X0.8, (torque to 30-35 in.lbs.)
12	8820-1035	2	HEX HD CAPSCREW, 3/8-16X1, GR5
13	8855-1011	4	LOCKWASHER, 3/8
14	9112-3126	1	STEERING CONTROL UNIT
15		Ref	DASH WIRING HARNESS (see page 11-4 for details
16	8820-1033	2	HEX HD CAPSCREW, 3/8-16X3/4, GR5
			NOTE: ONLY ITEMS WITH PART NUMBERS ARE AVAILABLE FOR SERVICE.

** Added part number to item 10.*

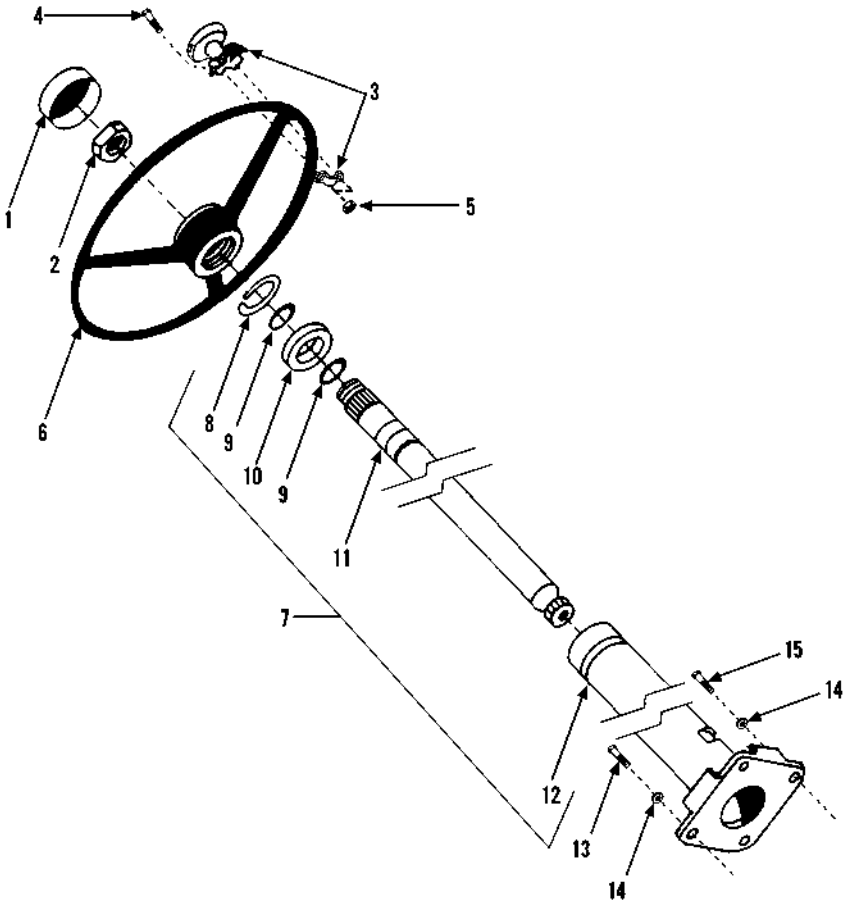

Item	Part No.	Qty.	Description Of Part
1	9060-0274	1	STEERING CAP
2	9020-0266	1	STEERING WHEEL NUT
3	9020-2230	1	SPINNER KNOB (includes items 4, & 5)
4	8830-1311	2	FLAT HD MACHINE SCREW, 1/4-20X1
5	8850-1616	2	HEX NUT, 1/4-20
6	9060-0273	1	STEERING WHEEL
7	9060-0267	1	STEERING COLUMN ASSY (includes items 8 thru 12)
* 8		1	RETAINING RING
* 9		2	RETAINING RING
10	9020-1348	1	BEARING
*11		1	SHAFT
*12		1	TUBE & FLANGE
13	8820-1037	2	HEX HD CAPSCREW, 3/8-16X1-1/2, GR5
14	8855-1011	4	LOCKWASHER, 3/8
15	8820-1033	2	HEX HD CAPSCREW, 3/8-16X3/4, GR5
			NOTE: ONLY ITEMS WITH PART NUMBERS ARE AVAILABLE FOR SERVICE.

** Removed invalid part numbers on items 8, 9, 11 & 12, added note. Changed starting serial number.*

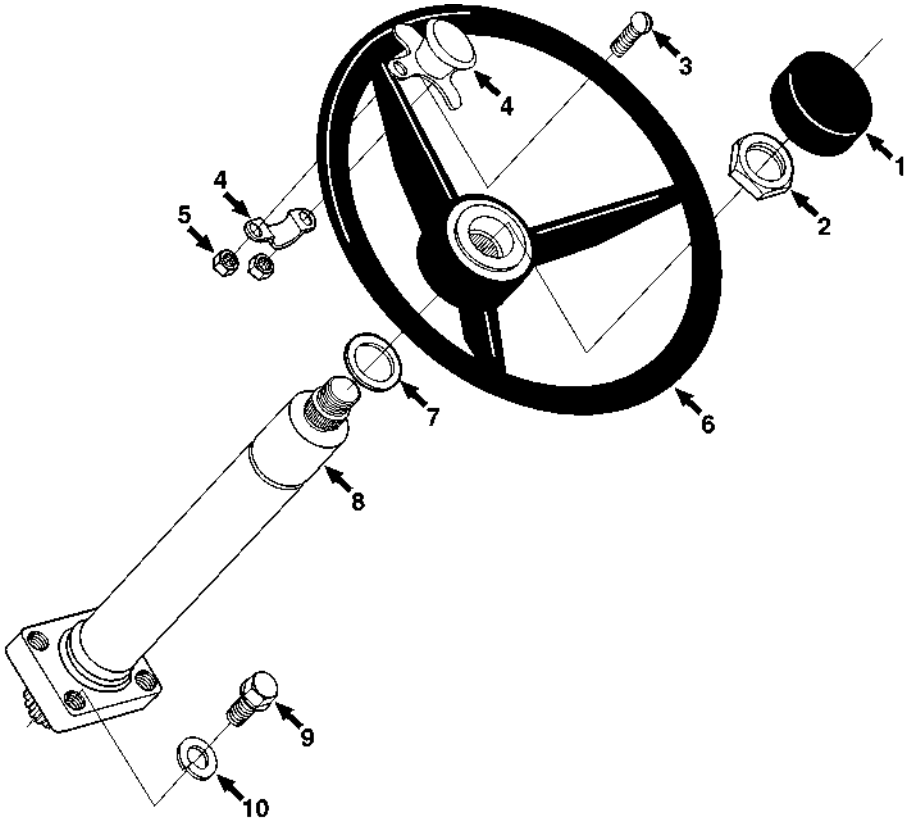

Item	Part No.	Qty.	Description Of Part
1	9060-0274	1	STEERING CAP
2	9114-4191	1	STEERING WHEEL NUT
3	9020-2230	1	SPINNER KNOB (includes items 4, & 5)
4	8830-1311	2	FLAT HD MACHINE SCREW, 1/4-20X1
5	8850-1616	2	HEX NUT, 1/4-20
6	9060-0273	1	STEERING WHEEL
7	9114-4192	1	WASHER
8	9114-3022	1	STEERING COLUMN
9	8820-1035	2	HEX HD CAPSCREW, 3/8-16X1, GR5
	8820-1033	2	HEX HD CAPSCREW, 3/8-16X3/4, GR5
10	8855-1011	4	LOCKWASHER, 3/8

CONTROLS
(9112-5040) Floorplate Assembly
Starting Serial No. 0288777
Original Issue 10-95

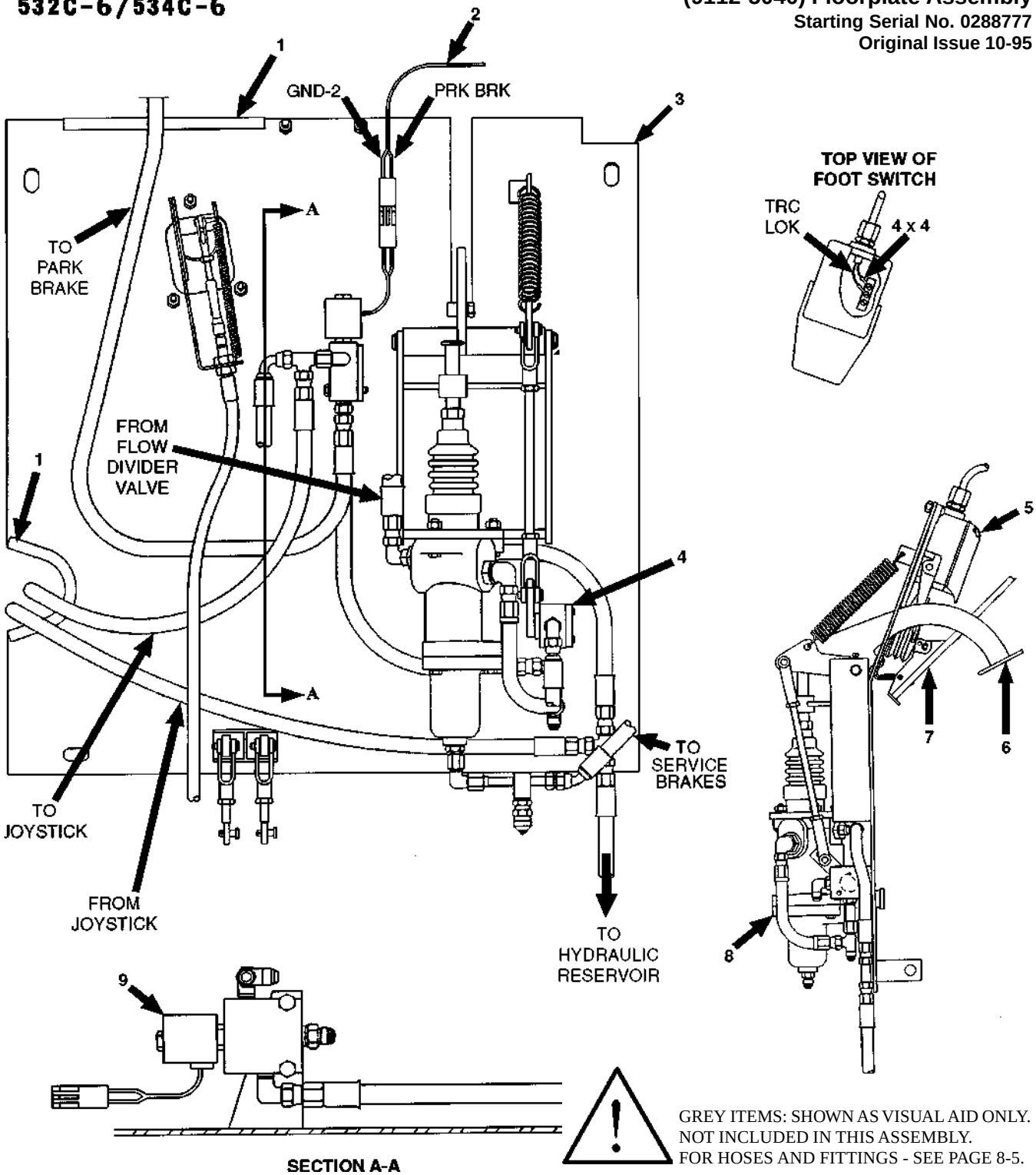

SECTION A-A

GREY ITEMS: SHOWN AS VISUAL AID ONLY. NOT INCLUDED IN THIS ASSEMBLY. FOR HOSES AND FITTINGS - SEE PAGE 8-5.

Item	Part No.	Qty.	Description Of Part
	9112-5040	1	FLOORPLATE ASSY (includes items 1, 3 thru 9)
1	9020-6198	AR	TRIM-LOK
2		Ref	DASH HARNESS(see page 11-7 for details)
3	9112-6050	1	FLOORPLATE WELDMENT
4		Ref	INCHING VALVE(see page 10-16 for details)

Item	Part No.	Qty.	Description Of Part
5		Ref	FOOT SWITCH(see page 8-3 for details)
6		Ref	BRAKE PEDAL AND LINKAGE (see page 8-3 for details)
7		Ref	ACCELERATOR ASSY(see page 7-3 for details)
8		Ref	BRAKE VALVE(see page 10-13)
9		Ref	SOLENOID VALVE(see page 10-14)

CONTROLS
(9109-5022) Floorplate Assembly - 532C-6
(9112-5053) Floorplate Assembly - 534C-6
(9132-5006) Floorplate Assembly - 534C-6 (TURBO)

Starting Serial No. 0388247
Original Issue 3-96

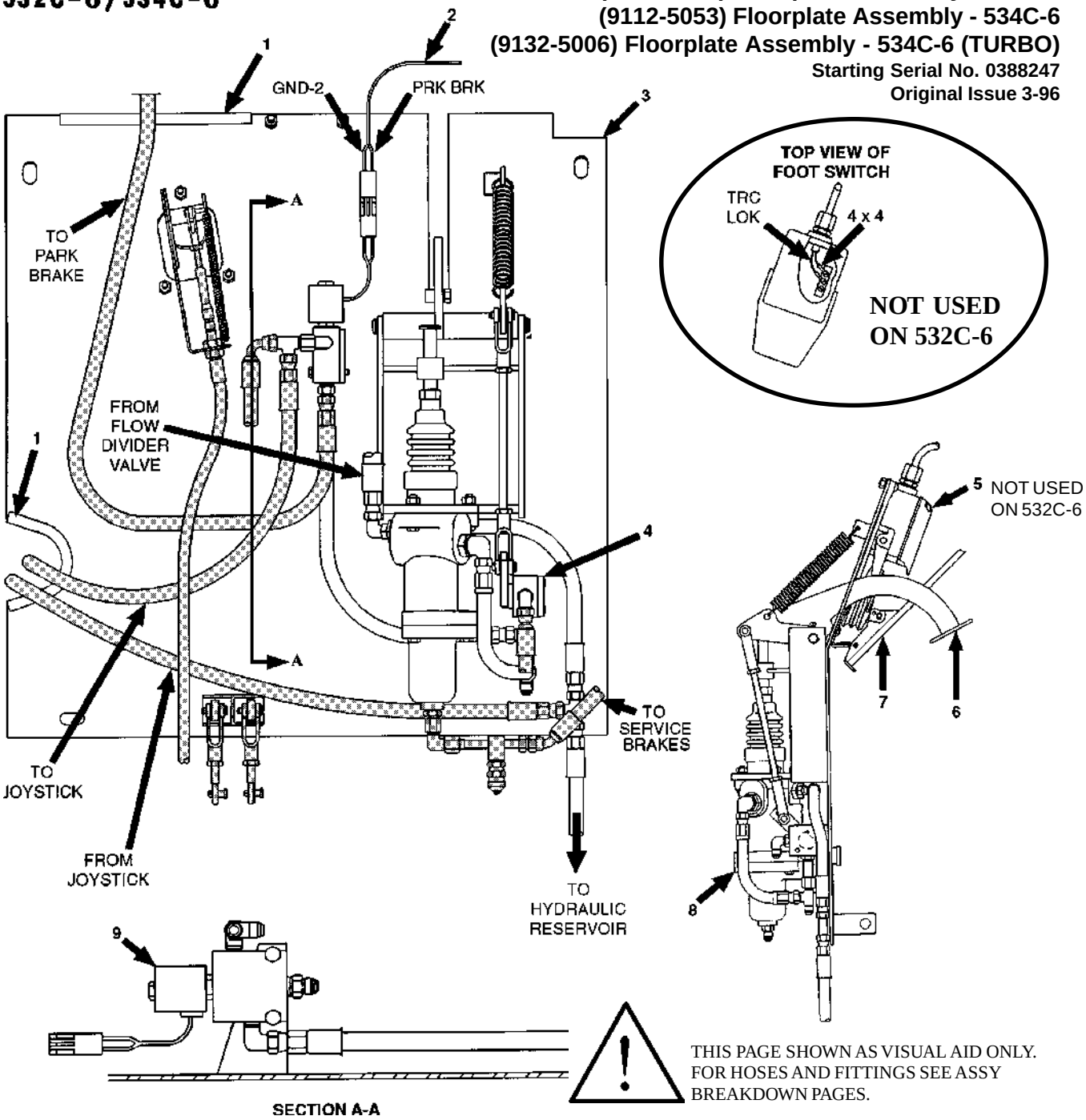

THIS PAGE SHOWN AS VISUAL AID ONLY. FOR HOSES AND FITTINGS SEE ASSY BREAKDOWN PAGES.

Item	Part No.	Qty.	Description Of Part
	9109-5022	1	FLOORPLATE ASSY - 532C-6 (includes items 1, 2, 3, 4, 6 thru 9, plus various items on see pages)
	9112-5053	1	FLOORPLATE ASSY - 534C-6 (includes items 1 thru 9, plus various items on see pages)
	9132-5006	1	FLOORPLATE ASSY - 534C-6 (TURBO) (includes items 1 thru 9, plus various items on see pages)
1	9020-6198	AR	TRIM-LOK
2		Ref	DASH HARNESS (see pages 11-3 & 11-4 for details)

Item	Part No.	Qty.	Description Of Part
3	9112-6051	1	FLOORPLATE WELDMENT
4		Ref	INCHING VALVE(see page 10-16 for details)
5		Ref	FOOT SWITCH - NOT USED ON 532C-6 (see page 7-7 for details)
6		Ref	BRAKE PEDAL AND LINKAGE (see page 7-7 for details)
7		Ref	ACCELERATOR ASSY (see page 7-3 for details)
8		Ref	BRAKE VALVE (see page 10-13 for details)
9		Ref	SOLENOID VALVE (see page 10-14 for details)

CONTROLS
(9109-5024) Floorplate Assembly - 532C-6
(9108-5111) Floorplate Assembly - 534C-6
(9132-5008) Floorplate Assembly - 534C-6 (TURBO)

Starting Serial No. 0388349
Original Issue 6-96

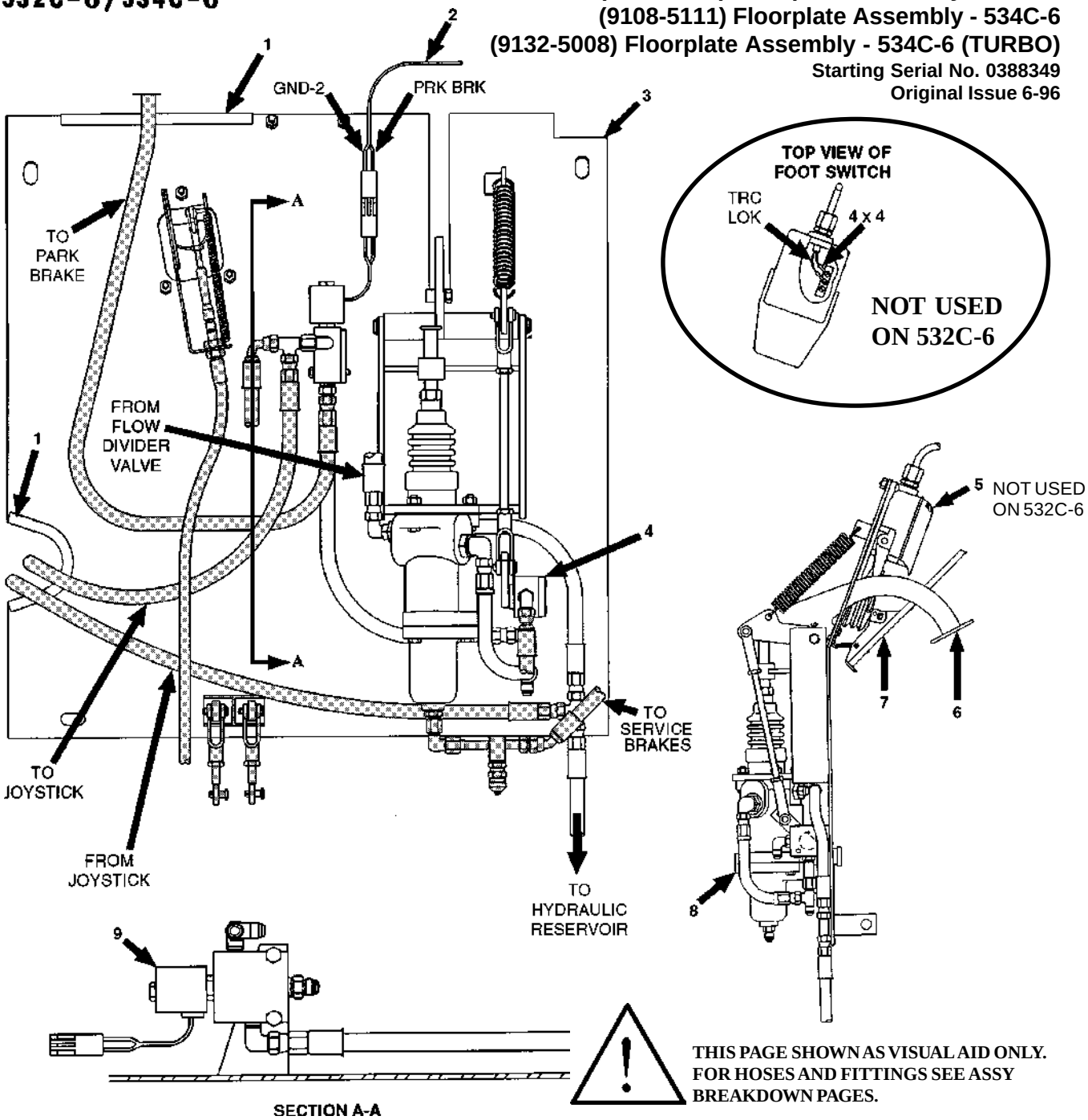

THIS PAGE SHOWN AS VISUAL AID ONLY. FOR HOSES AND FITTINGS SEE ASSY BREAKDOWN PAGES.

Item	Part No.	Qty.	Description Of Part
	9109-5024	1	FLOORPLATE ASSY - 532C-6 (includes items 1, 2, 3, 4, 6 thru 9, plus various items on see pages)
	9108-5111	1	FLOORPLATE ASSY - 534C-6 (includes items 1 thru 9, plus various items on see pages)
	9132-5008	1	FLOORPLATE ASSY - 534C-6 (TURBO) (includes items 1 thru 9, plus various items on see pages)
1	9020-6198	AR	TRIM-LOK
2		Ref	DASH HARNESS (see pages 11-3 & 11-4 for details)

Item	Part No.	Qty.	Description Of Part
3	9112-6051	1	FLOORPLATE WELDMENT
4		Ref	INCHING VALVE(see page 10-16 for details)
5		Ref	FOOT SWITCH - NOT USED ON 532C-6 (see page 7-7 for details)
6		Ref	BRAKE PEDAL AND LINKAGE (see page 7-7 for details)
7		Ref	ACCELERATOR ASSY (see page 7-3 for details)
8		Ref	BRAKE VALVE (see page 10-13 for details)
9		Ref	SOLENOID VALVE (see page 10-14 for details)

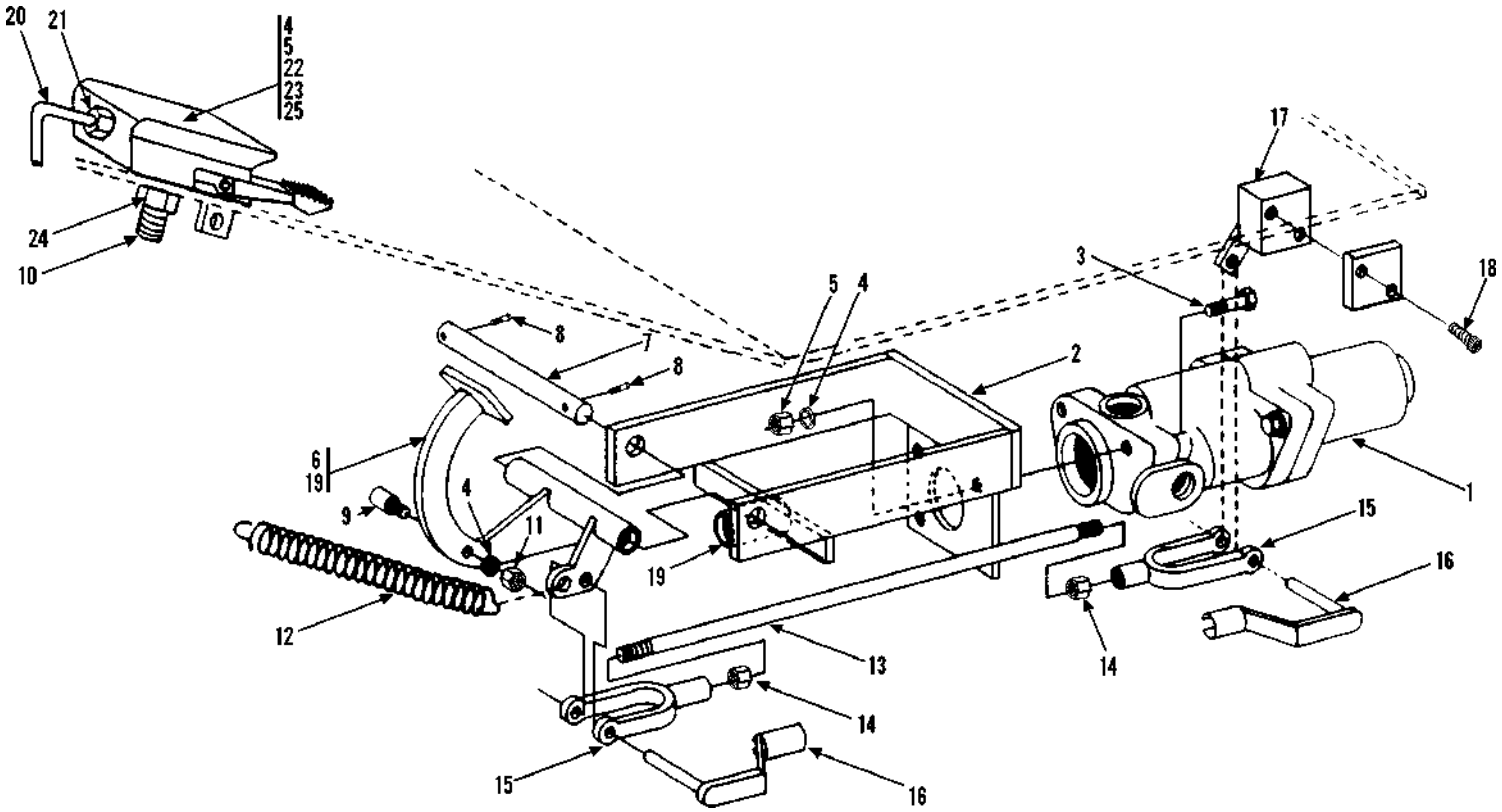

Item	Part No.	Qty.	Description Of Part
1		Ref	BRAKE VALVE, (see page 10-13 for details)
2	9112-6050	1	FLOOR PLATE WELDMENT
3	8820-1022	3	HEX HD CAPSCREW, 5/16-18X1-1/2, GR5
4	8855-1010	7	LOCKWASHER, 5/16 (qty. of 4 used on 532C-6)
5	8850-1005	6	HEX NUT 5/16-18 (qty. of 3 used on 532C-6)
6	9108-6090	1	BRAKE PEDAL
7	9020-0284	1	SHAFT
8	8844-1001	2	SQUARE HD CAPSCREW, 1/4-20X1/2
9	9108-3312	1	CAM ROLLER
10	8820-1103	1	HEX HD CAPSCREW, 5/8-11X3-1/2, GR5 (534C-6 only)
11	8850-1405	1	HEX JAM NUT, 5/16-24

Item	Part No.	Qty.	Description Of Part
12	9104-3286	1	SPRING
13	9108-1332	1	LINKAGE ROD
14	8850-1406	2	HEX JAM NUT, 3/8-24
15	8882-1004	2	YOKE END
16	9002-7987	2	CLEVIS PIN
17		Ref	INCHING VALVE, (see page 10-16 for details)
18	8821-2228	2	SOCKET HD CAPSCREW, 5/16-18X1-1/4
19	9108-3136	4	BUSHING
20	9108-5045	1	SWITCH CABLE (534C-6 only) (includes item 25
21	9108-3336	1	CORD CONNECTOR (534C-6 only)
22	9108-3311	1	FOOT SWITCH (534C-6 only)
23	8820-1024	3	BUTTON HD CAPSCREW, 5/16-18X1, GR5 (534C-6 only)
24	8850-1110	2	JAM NUT, 5/8-11 (534C-6 only)
*25	9112-4109	1	MICRO SWITCH (534C-6 only)

* *Added item 25.*

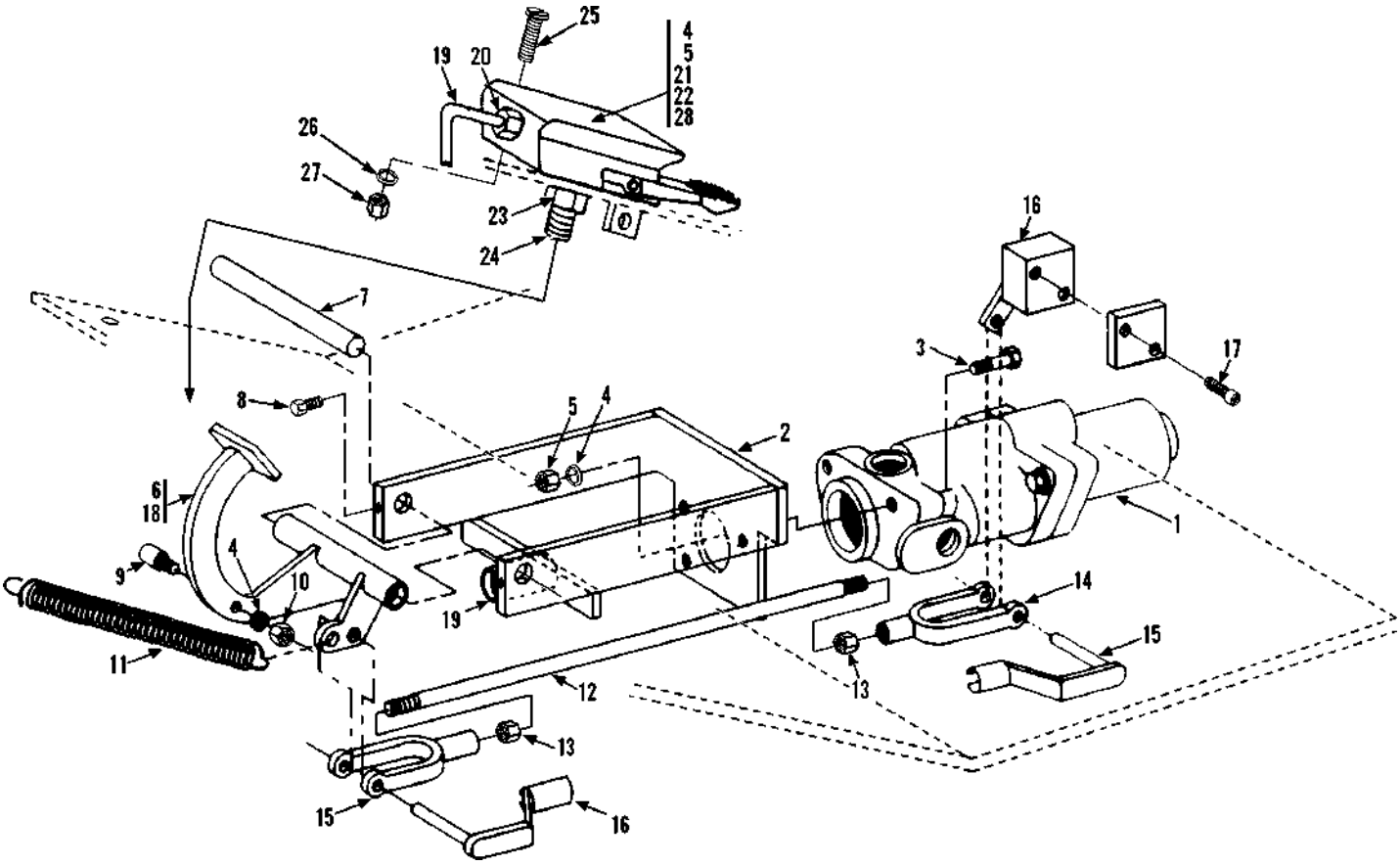

Item	Part No.	Qty.	Description Of Part
1		Ref	BRAKE VALVE, (see page 10-13 for details)
2	9112-6050	1	FLOOR PLATE WELDMENT
3	8820-1022	3	HEX HD CAPSCREW, 5/16-18X1-1/2, GR5
4	8855-1010	4	LOCKWASHER, 5/16
5	8850-1005	3	HEX NUT 5/16-18 532C-6)
6	9108-6090	1	BRAKE PEDAL
7	9020-0284	1	SHAFT
8	8844-1001	2	SQUARE HD SET SCREW, 1/4-20X1/2
9	9108-3312	1	CAM ROLLER
10	8850-1405	1	HEX JAM NUT, 5/16-24
11	9104-3286	1	SPRING
12	9108-1332	1	LINKAGE ROD
13	8850-1406	2	HEX JAM NUT, 3/8-24
14	8882-1004	2	YOKE END
15	9002-7987	2	CLEVIS PIN
16		Ref	INCHING VALVE, (see page 10-16 for details)

Item	Part No.	Qty.	Description Of Part
17	8821-2228	2	SOCKET HD CAPSCREW, 5/16-18X1-1/4
18	9108-3136	4	BUSHING
19		Ref	DASH HARNESS (see page 11-3 for 532C-6 & 11-4 for 534C-6 details)
20	9114-3141	1	CORD CONNECTOR (534C-6 only)
21	9108-3311	1	FOOT SWITCH (534C-6 only) (includes item 28)
22	8826-1024	3	BUTTON HD CAPSCREW, 5/16-18X1, GR5 (534C-6 only)
23	8850-1110	2	JAM NUT, 5/8-11 (534C-6 only)
24	8820-1103	1	HEX HD CAPSCREW, 5/8-11X3-1/2, GR5 (534C-6 only)
25	8826-1024	3	BUTTON HD CAPSCREW, 5/16-18X1 (534C-6 only)
26	8855-1010	3	LOCKWASHER, 5/16 (534C-6 only)
27	8850-1005	3	HEX NUT, 5/16-18 (534C-6 only)
*28	9112-4109	1	MICRO SWITCH (534C-6 only)

** Added item 28.*

CONTROLS
Brake & Inching Linkage
Starting Serial No. 0388247
Original Issue 3-96
Revised 6-6-97

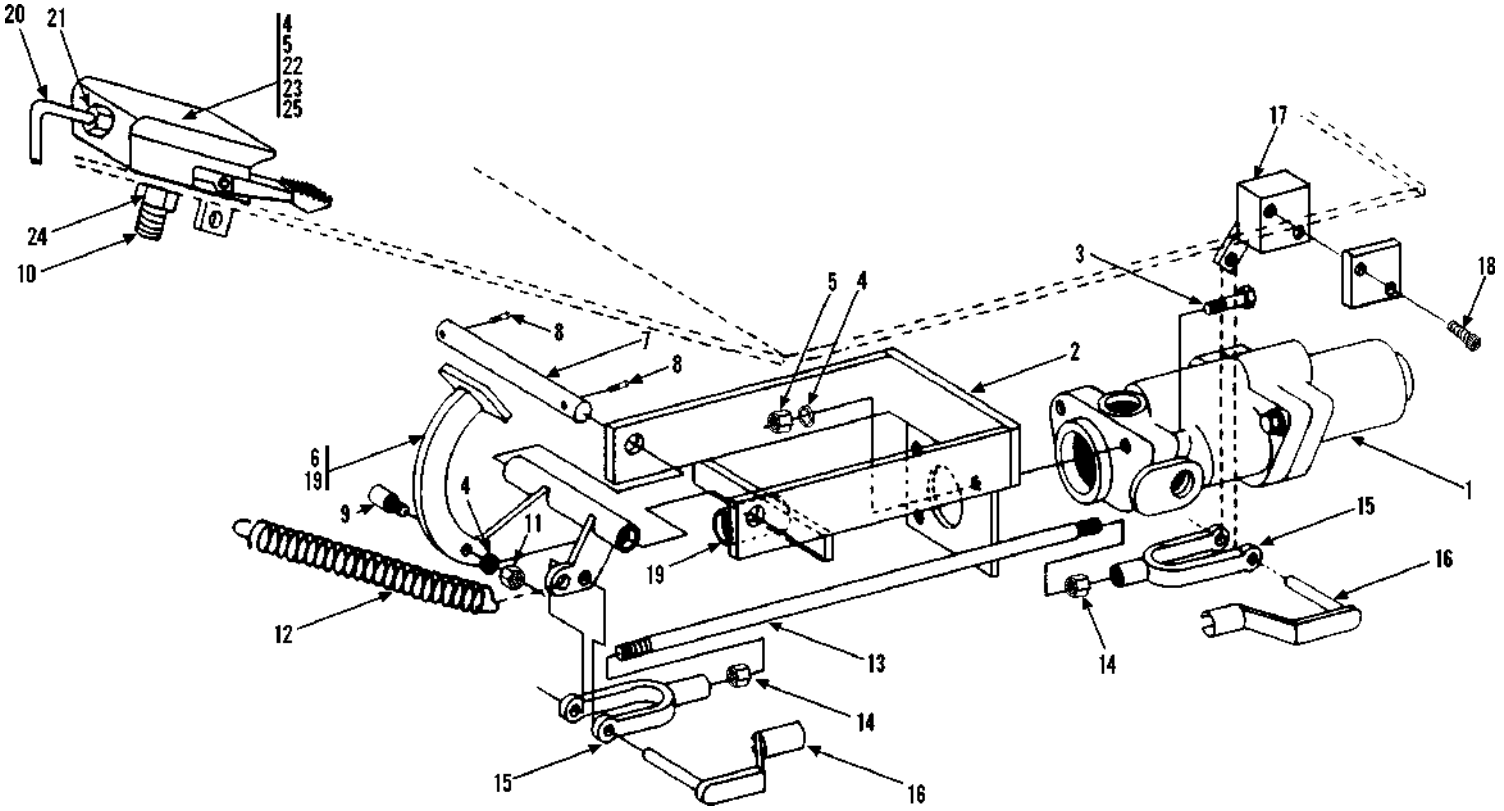

Item	Part No.	Qty.	Description Of Part
1		Ref	BRAKE VALVE, (see page 10-13 for details)
2	9112-6051	1	FLOOR PLATE WELDMENT
3	8820-1022	3	HEX HD CAPSCREW, 5/16-18X1-1/2, GR5
4	8855-1010	7	LOCKWASHER, 5/16 (qty. of 4 used on 532C-6)
5	8850-1005	6	HEX NUT 5/16-18 (qty. of 3 used on 532C-6)
6	9114-6059	1	BRAKE PEDAL
7	9020-0284	1	SHAFT
8	8844-1001	2	SQUARE HD SET SCREW, 1/4-20X1/2
9	9108-3312	1	CAM ROLLER
10	8820-1103	1	HEX HD CAPSCREW, 5/8-11X3-1/2, GR5 (534C-6 only)
11	8850-1405	1	HEX JAM NUT, 5/16-24
12	9104-3214	1	SPRING

Item	Part No.	Qty.	Description Of Part
13	9108-1332	1	LINKAGE ROD
14	8850-1406	2	HEX JAM NUT, 3/8-24
15	8882-1004	2	YOKE END
16	9002-7987	2	CLEVIS PIN
17		Ref	INCHING VALVE, (see page 10-16 for details)
18	8821-2228	2	SOCKET HD CAPSCREW, 5/16-18X1-1/4
19	9108-3136	4	BUSHING
20		Ref	DASH HARNESS (see page 11-3 for 532C-6 & 11-4 for 534C-6 details)
21	9114-3141	1	CORD CONNECTOR (534C-6 only)
22	9108-3311	1	FOOT SWITCH (534C-6 only) (includes item 25)
23	8826-1024	3	BUTTON HD CAPSCREW, 5/16-18X1, GR5 (534C-6 only)
24	8850-1110	2	JAM NUT, 5/8-11 (534C-6 only)
*25	9112-4109	1	MICRO SWITCH (534C-6 only)

* *Added item 25.*

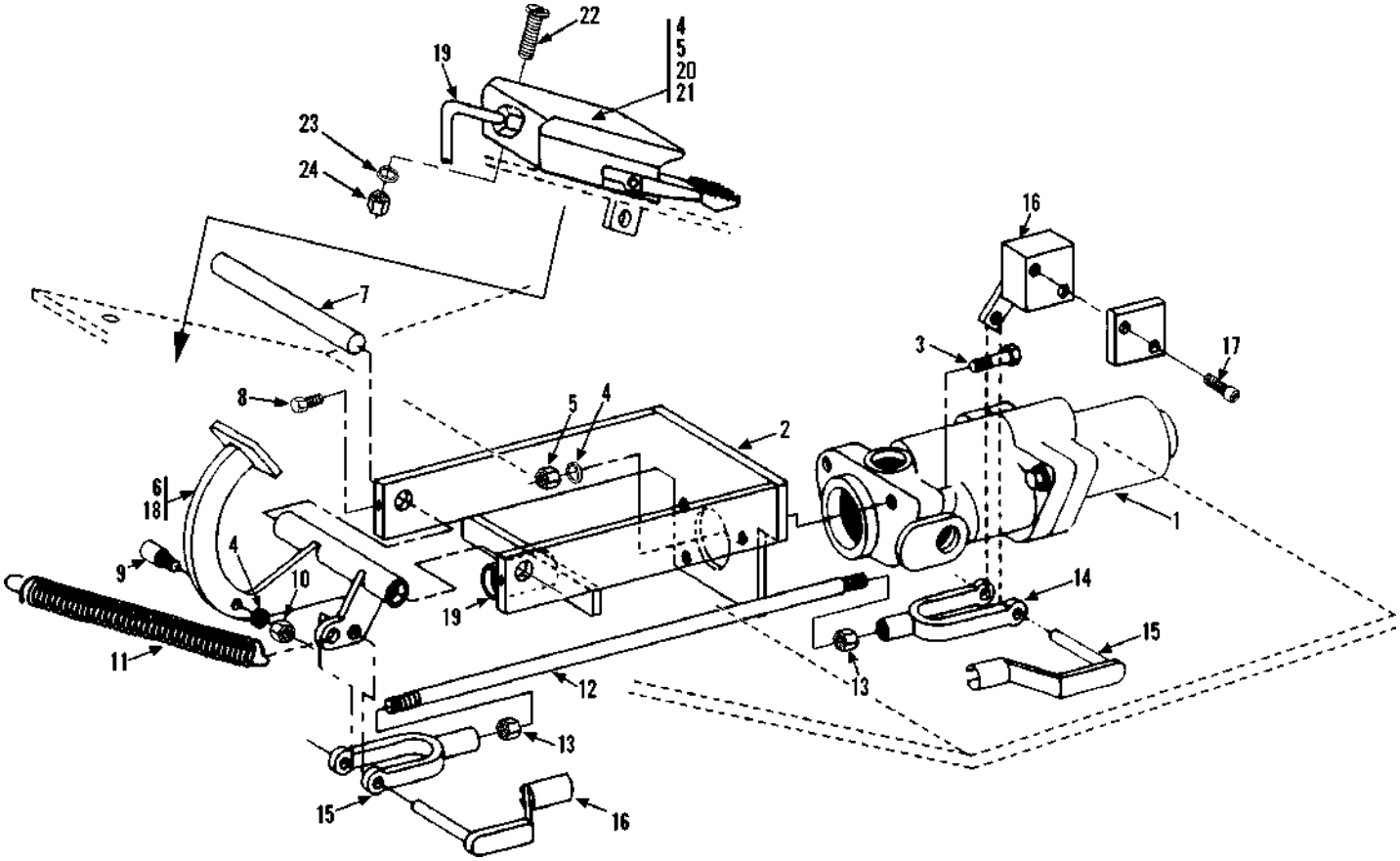

Item	Part No.	Qty.	Description Of Part
1		Ref	BRAKE VALVE, (see page 10-13 for details)
2	9112-6051	1	FLOOR PLATE WELDMENT
3	8820-1022	3	HEX HD CAPSCREW, 5/16-18X1-1/2, GR5
4	8855-1010	4	LOCKWASHER, 5/16
5	8850-1005	3	HEX NUT 5/16-18
6	9114-6059	1	BRAKE PEDAL
7	9020-0284	1	SHAFT
8	8844-1001	2	SQUARE HD SET SCREW, 1/4-20X1/2
9	9108-3312	1	CAM ROLLER
10	8850-1405	1	HEX JAM NUT, 5/16-24
11	9104-3214	1	SPRING
12	9108-1332	1	LINKAGE ROD
13	8850-1406	2	HEX JAM NUT, 3/8-24
14	8882-1004	2	YOKE END
15	9002-7987	2	CLEVIS PIN
16		Ref	INCHING VALVE (see page 10-16 for details)
17	8821-2228	2	SOCKET HD CAPSCREW, 5/16-18X1-1/4
18	9108-3136	4	BUSHING
19		Ref	DASH HARNESS (see page 11-4 for details)
20	9116-3093	1	FOOT SWITCH (includes item 21)
21	9112-4109	1	MICRO SWITCH
22	8826-1024	3	BUTTON HD CAPSCREW, 5/16-18X1, GR5
23	8855-1010	3	LOCKWASHER, 5/16
24	8850-1005	3	HEX NUT, 5/16-18

BRAKES
Service Brake Lines
Starting Serial No. 0188002
Original Issue 1-90
Revised 9-25-95

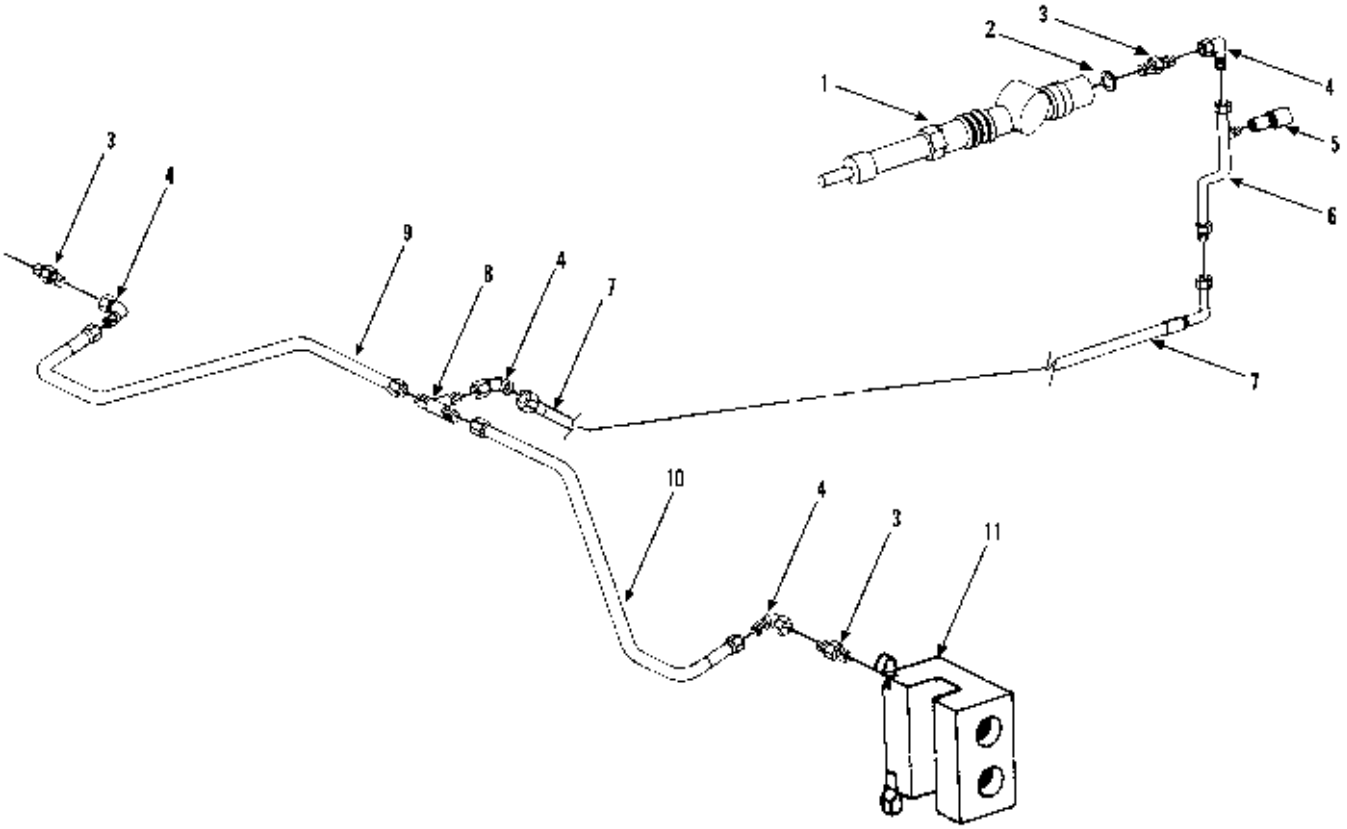

Item	Part No.	Qty.	Description Of Part
1		Ref	BRAKE VALVE (see page 10-13 for details)
2	9020-7856	1	COPPER GASKET
3	8363-3002	3	STRAIGHT ADAPTER
4	8866-2105	3	ELBOW, 90 DEGREES (swivel nut)
5	7713-3089	1	TEST FITTING
6	9104-3163	1	TUBE

Item	Part No.	Qty.	Description Of Part
7	8471-8021	1	HOSE ASSY
8	8866-1305	1	UNION TEE, 1/4 TUBE
9	9108-3303	1	BRAKE LINE
10	9108-3302	1	BRAKE LINE
11		2	BRAKE ASSY (see page 8-2 for details)

** Changed upper left corner to designate model more clearly.*

BRAKES
Service/Park Brake Lines
Starting Serial No. 0388247
Original Issue 3-96
Revised 4-1-97

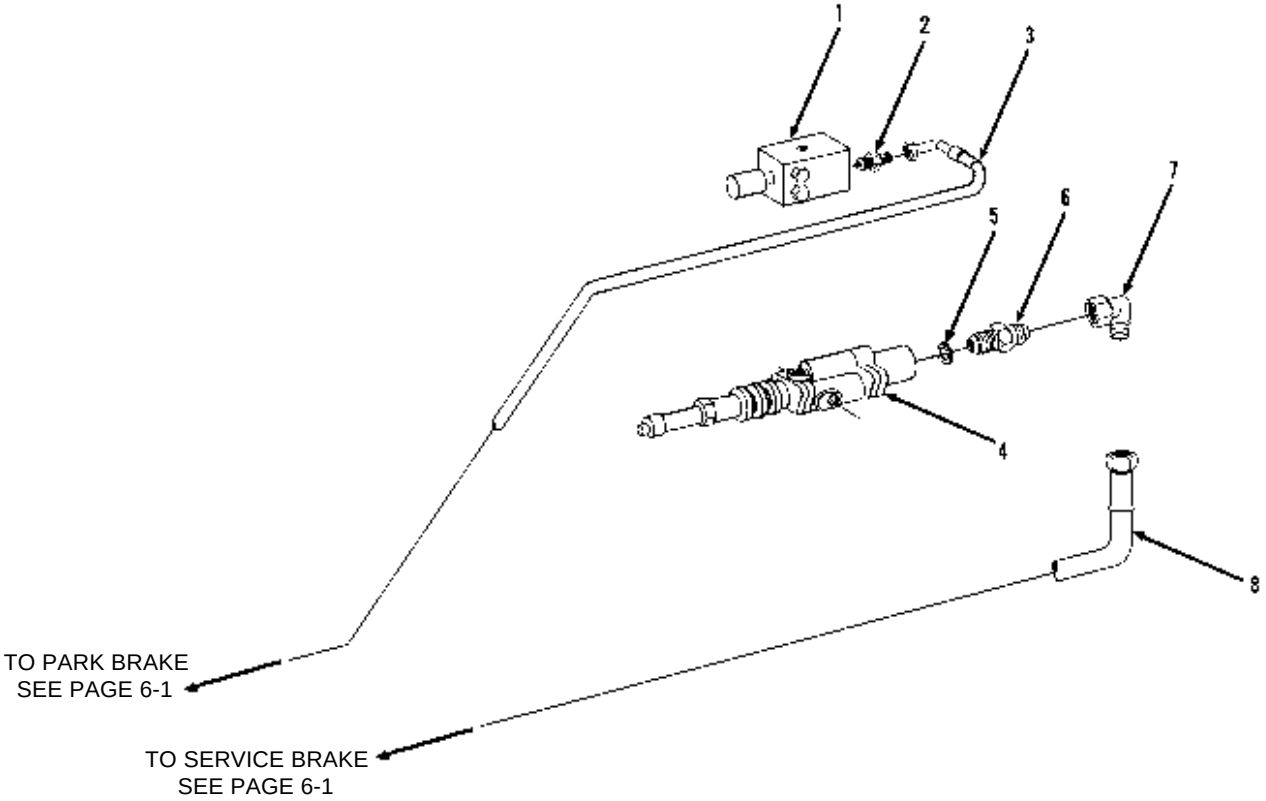

Item	Part No.	Qty.	Description Of Part
1		Ref	SOLENOID VALVE (see page 10-14 starting S/N 0288777 for details)
2	8866-2005	1	CONNECTOR (includes o-ring)
	8859-1204	1	O-RING
* 3	8471-8903	1	HOSE ASSY
4		Ref	BRAKE VALVE (see page 10-13 starting S/N 0388247 for details)
5	9020-7856	1	COPPER GASKET
6	8363-3002	1	STRAIGHT ADAPTER
7	8866-2105	1	ELBOW, 90 DEGREES (swivel nut)
* 8	8471-8077	1	HOSE ASSY

* *Changed part numbers on items 3 & 8.*

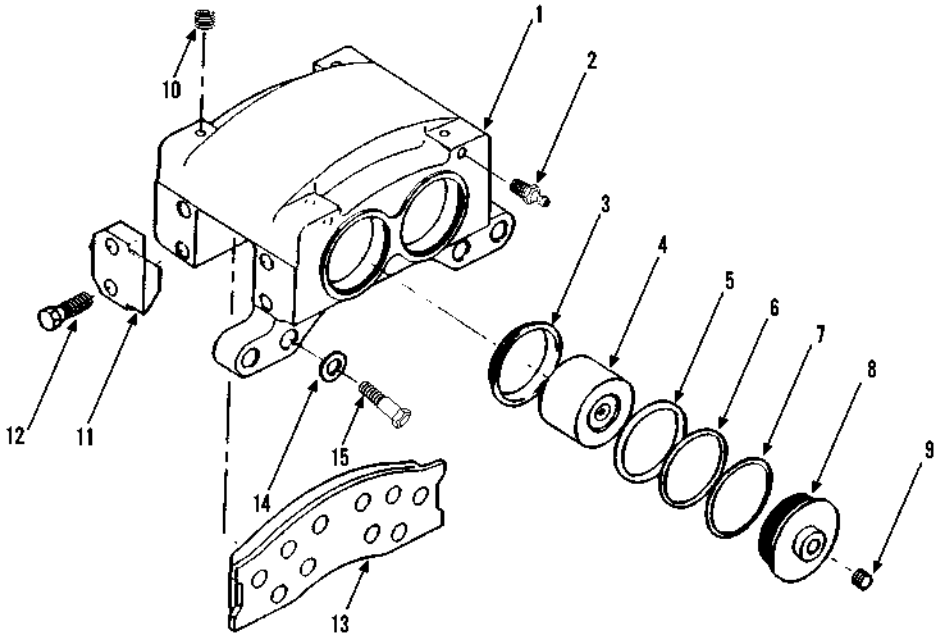

NOTE: FOR MACHINES WITH S/N 0388247 AND AFTER, SEE SECTION 6 FOR BRAKE INFORMATION.

Item	Part No.	Qty.	Description Of Part
	9108-4151	Ref	BRAKE CALIPER ASSY, (includes items 1 thru 13)
1	9108-4152	1	HOUSING
2	9102-4051	2	BLEEDER SCREW
3	9102-4052	4	DUST SEAL
4	9102-4053	4	PISTON
5	9102-4054	4	BACKING RING
6	9102-4055	4	O-RING
7	9102-4056	2	O-RING
8	9102-4057	2	CAP

Item	Part No.	Qty.	Description Of Part
9	9102-4058	1	PLUG
10	9102-4059	4	PLUG
11	9102-4060	4	HOUSING PLATE
12	9102-4061	8	CAPSCREW
* 13	9102-4062	2	LINING ASSY (includes lining compound & backing plate), (enough to service one caliper)
14	9108-4153	8	WASHER
15	9108-4154	8	CAPSCREW

** Added note on item 13.*

GO TO THE CONTROLS SECTION PAGE 7-7 FOR DETAILS.

BRAKES
Inching & Parking Brake Lines (532C-6)
Starting Serial No. 0188002
Original Issue 1-90
Revised 9-26-95

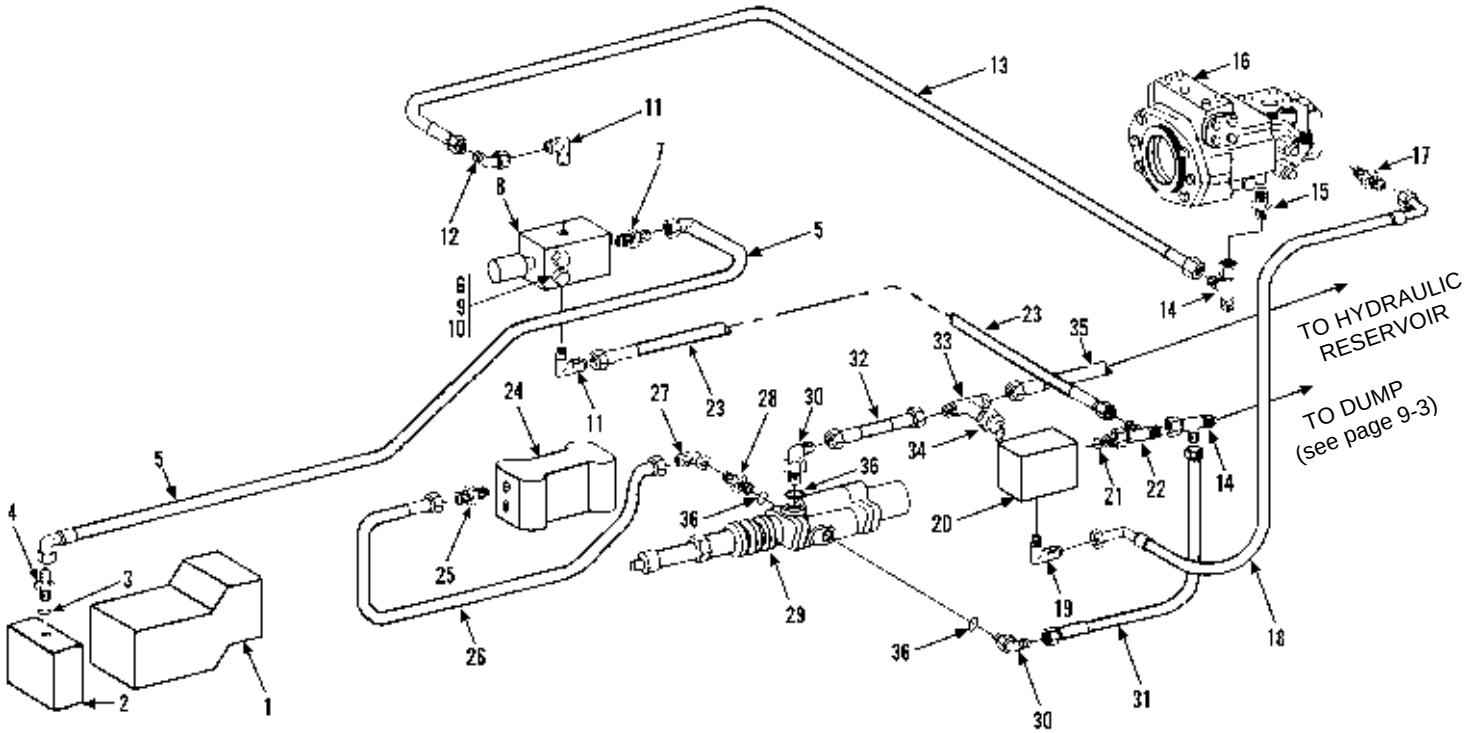

Item	Part No.	Qty.	Description Of Part
1		Ref	FRONT AXLE DRIVE MOTOR (see page 10-19 for details)
2		Ref	BRAKE ASSY (see page 6-4 for details)
3	8859-1202	1	O-RING
4	8866-2003	1	CONNECTOR (includes item 3)
5	8471-7869	1	HOSE ASSY
* 6	8856-1107	2	FLATWASHER
7	9108-3213	1	CONNECTOR
8		Ref	SOLENOID VALVE (see page 10-14 for details)
9	8820-1008	2	HEX HD CAPSCREW, 1/4-20X1-3/4, GR5
10	8855-1009	2	LOCKWASHER, 1/4
11	8866-1109	2	MALE ELBOW, 90 DEGREES, 3/8 TUBE
12	8866-2105	2	ELBOW, 90 DEGREES, (swivel nut)
13	8471-7852	1	HOSE ASSY
14	8866-2239	2	SWIVEL NUT RUN TEE, 3/8 TUBE
* 15	9105-3426	1	CONNECTOR (includes o-ring)
	8859-1207	1	O-RING
16		Ref	HYDROSTATIC TRANSMISSION ASSY (see page 10-18 for details)
17	8866-2017	1	CONNECTOR (includes o-ring)
	8859-1204	1	O-RING

Item	Part No.	Qty.	Description Of Part
18	8471-7817	1	HOSE ASSY
19	8866-2064	1	ELBOW, 90 DEGREES (includes o-ring)
	8859-1204	1	O-RING
20		Ref	INCHING VALVE (see page 10-16 for details)
21	8859-1204	1	O-RING
22	8866-2139	1	RUN TEE (includes item 21)
23	8471-7889	1	HOSE ASSY
24		Ref	FLOW DIVIDER VALVE (see page 10-12 for details)
25	9105-3426	1	CONNECTOR
26	8471-7853	1	HOSE ASSY
27	8866-2105	1	ELBOW, 90 DEGREES (swivel nut)
* 28	9108-3306	1	CONNECTOR (includes item 36)
29		Ref	BRAKE VALVE ASSY (see page 10-13 for details)
* 30	9108-3310	2	ELBOW, 90 DEGREES (includes item 36)
31	8471-7892	1	HOSE ASSY
32	8471-7890	1	HOSE ASSY
33	8866-1305	1	UNION TEE, 3/8 TUBE
34	8866-1364	1	CAP
35	8471-6358	1	HOSE ASSY
* 36	8859-1206	3	O-RING

** Changed part number on item 6, included o-ring with items 15, 28 & 30, and added item 36.*

BRAKES
Inching & Parking Brake Lines (532C-6)
Starting Serial No. 0188166
Original Issue 4-93
Revised 9-28-95

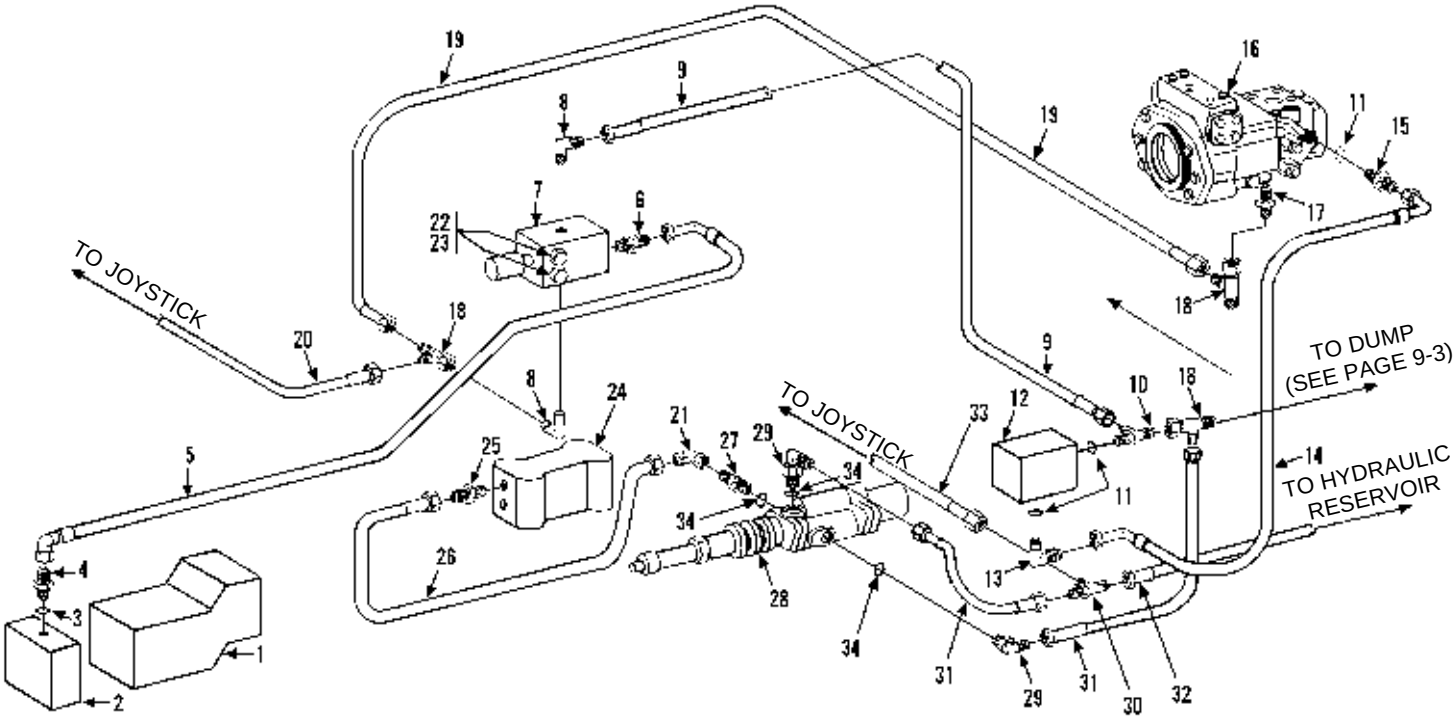

Item	Part No.	Qty.	Description Of Part
1		Ref	FRONT AXLE DRIVE MOTOR (see page 10-19 for details)
2		Ref	BRAKE ASSY (see page 6-4 for details)
3	8859-1202	1	O-RING
4	8866-2003	1	CONNECTOR (includes item 3)
5	8471-7869	1	HOSE ASSY
6	9108-3213	1	CONNECTOR
7		Ref	SOLENOID VALVE (see page 10-14 for details)
8	8866-1109	2	MALE ELBOW, 90 DEGREES, 3/8 TUBE
9	8471-7889	1	HOSE ASSY
10	8866-2139	1	RUN TEE (includes item 11)
11	8859-1204	3	O-RING
12		Ref	INCHING VALVE (see page 10-16 for details)
*13	8866-2064	1	ELBOW, 90 DEGREES (includes item 11)
*14	8471-7905	1	HOSE ASSY
15	8866-2017	1	CONNECTOR (includes item 11)
16		Ref	HYDROSTATIC TRANSMISSION ASSY (see page 10-18 for details)

Item	Part No.	Qty.	Description Of Part
17	9105-3426	1	CONNECTOR
*18	8866-2239	3	SWIVEL NUT RUN TEE, 3/8 TUBE
19	8471-7852	1	HOSE ASSY
20	9020-4096	1	HOSE ASSY
*21	8866-2105	1	ELBOW, 90 DEGREES (swivel nut)
22	8820-1008	2	HEX HD CAPSCREW, 1/4-20X1-3/4, GR5
23	8855-1009	2	LOCKWASHER, 1/4
24		Ref	FLOW DIVIDER VALVE (see page 10-12 for details)
25	9105-3426	1	CONNECTOR
26	8471-7853	1	HOSE ASSY
*27	9108-3306	1	CONNECTOR (includes item 34)
28		Ref	BRAKE VALVE ASSY (see page 10-13 for details)
*29	9108-3310	2	ELBOW, 90 DEGREES (includes item 34)
30	8866-1305	1	UNION TEE, 3/8 TUBE
31	8471-7890	2	HOSE ASSY
*32	8471-6726	1	HOSE ASSY
33	7713-3197	1	HOSE ASSY
*34	8859-1206	3	O-RING

** Changed upper left to designate model more clearly. Changed part numbers on items 13, 14 & 32. Changed quantity on items 18 & 21, added item 34.*

BRAKES
Inching & Parking Brake Lines (532C-6)
Starting Serial No. 0388247
Original Issue 3-96
Revised 4-1-97

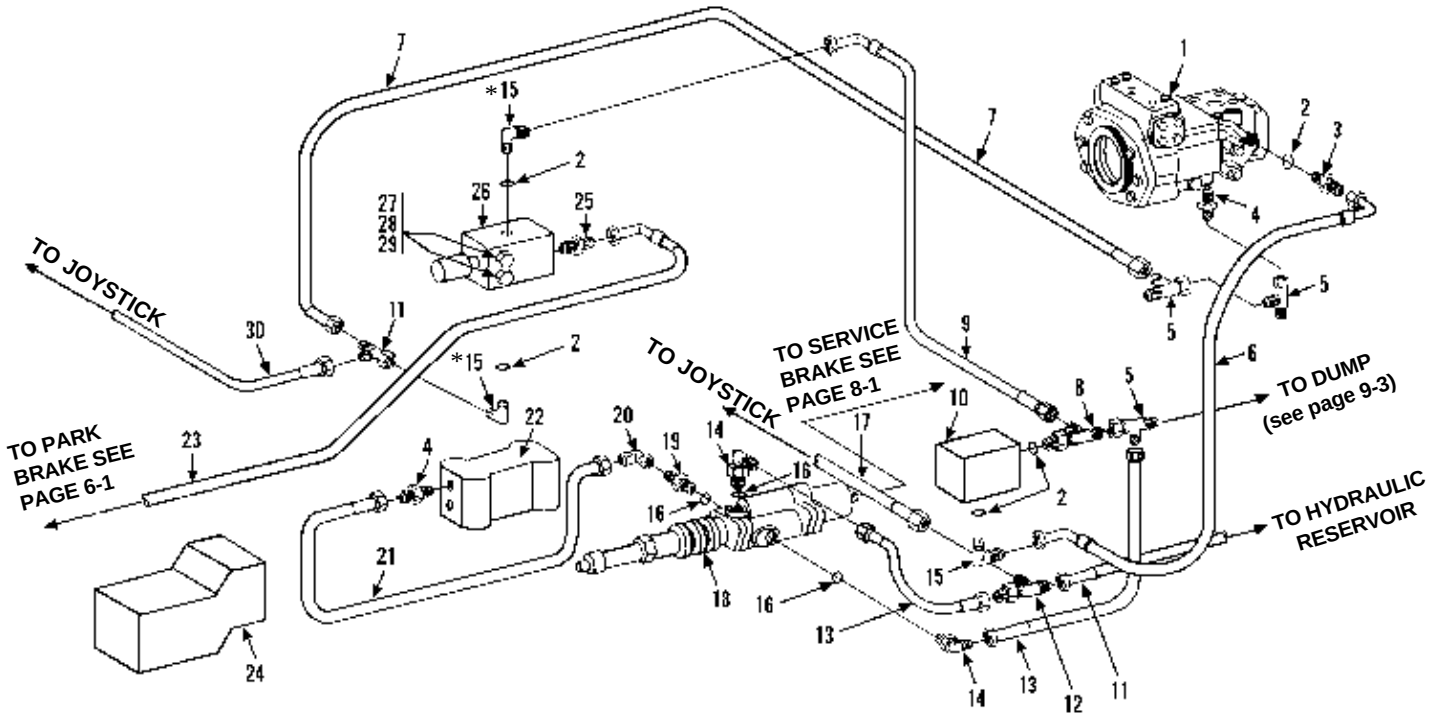

Item	Part No.	Qty.	Description Of Part
1		Ref	HYDROSTATIC TRANSMISSION ASSY (see page 10-18 for details)
2	8859-1204	5	O-RING
3	8866-2017	1	CONNECTOR (includes item 2)
4	9105-3426	2	CONNECTOR (includes o-ring)
	8859-1207	2	O-RING
5	8866-2239	3	SWIVEL NUT RUN TEE, 3/8 TUBE
6	8471-7905	1	HOSE ASSY
7	8471-7852	1	HOSE ASSY
8	8866-2139	1	RUN TEE (includes item 2)
9	8471-7889	1	HOSE ASSY
10		Ref	INCHING VALVE (see page 10-16 for details)
11	8471-6726	1	HOSE ASSY
12	8866-1305	1	UNION TEE, 3/8 TUBE
13	8471-7890	2	HOSE ASSY
14	9108-3310	2	ELBOW, 90 DEGREES (includes item 16)
15	8866-2064	3	ELBOW, 90 DEGREES (includes item 2)
16	8859-1206	3	O-RING

Item	Part No.	Qty.	Description Of Part
17	7713-3197	1	HOSE ASSY
18		Ref	BRAKE VALVE (see page 10-13 for details)
19	9108-3306	1	CONNECTOR (includes item 16)
20	8866-2105	1	ELBOW, 90 DEGREES (swivel nut)
21	8471-7853	1	HOSE ASSY
22		Ref	FLOW DIVIDER VALVE (see page 10-12 for details)
*23	8471-8903	1	HOSE ASSY
24		Ref	FRONT DRIVE MOTOR (see page 10-19 for details)
25	8866-2005	1	CONNECTOR (includes o-ring)
	8859-1204	1	O-RING
26		Ref	SOLENOID VALVE ASSY (see page 10-14 for details)
27	8820-1008	2	HEX HD CAPSCREW, 1/4-20X1-3/4, GR5
28	8856-1107	2	FLAT WASHER
29	8855-1009	2	LOCKWASHER, 1/4
30	9020-4096	1	HOSE ASSY

* *Changed part numbers on item 23.*

BRAKES
Inching & Parking Brake Lines (532C-6)
Starting Serial No. 0388349
Original Issue 6-96
Revised 4-1-97

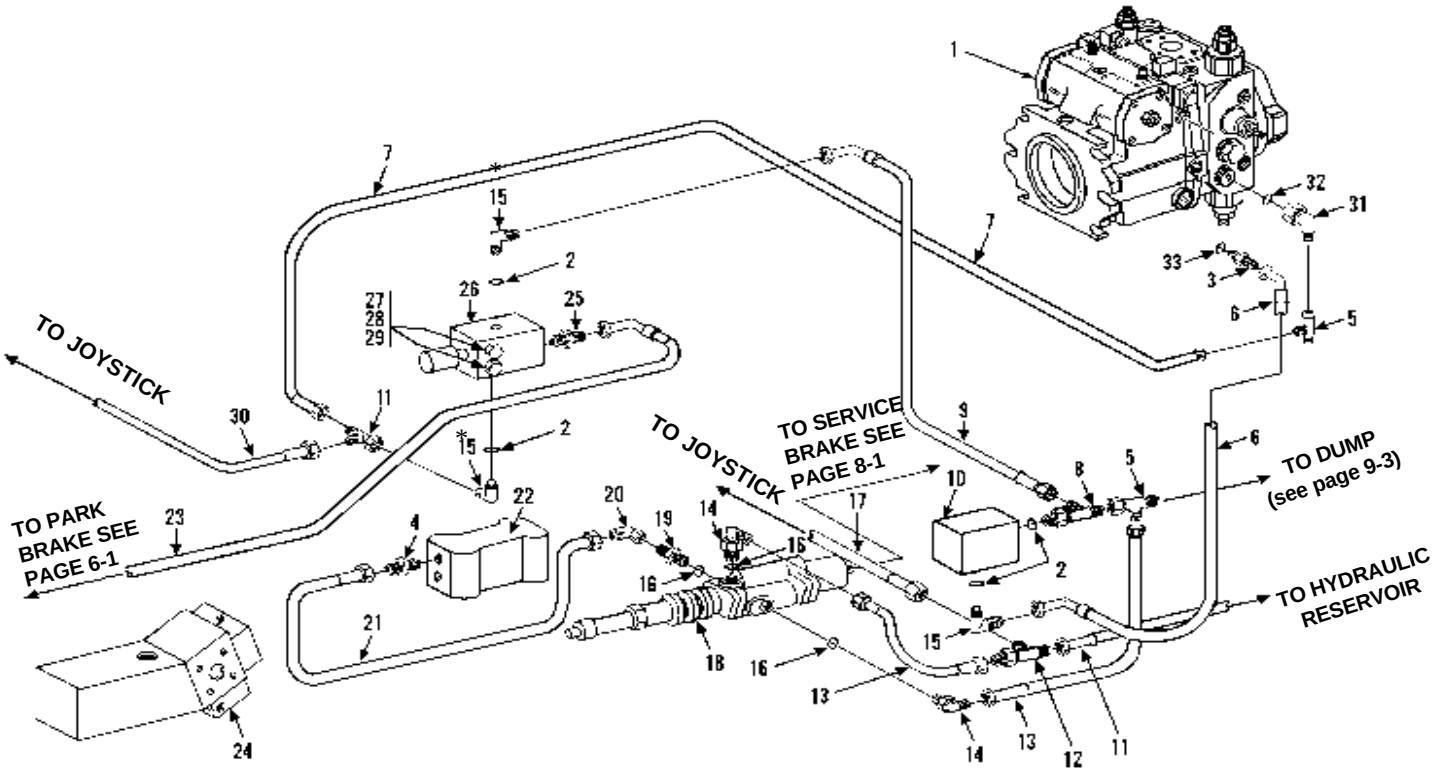

Item	Part No.	Qty.	Description Of Part
1		Ref	HYDROSTATIC TRANSMISSION ASSY (see page 10-18 for details)
2	8859-1204	5	O-RING
3	8866-2018	1	CONNECTOR (includes item 33)
4	9105-3426	2	CONNECTOR (includes o-ring)
	8859-1207	2	O-RING
5	8866-2239	3	SWIVEL NUT RUN TEE, 3/8 TUBE
6	8471-7341	1	HOSE ASSY
7	8471-7852	1	HOSE ASSY
8	8866-2139	1	RUN TEE (includes item 2)
9	8471-7889	1	HOSE ASSY
10		Ref	INCHING VALVE (see page 10-16 for details)
11	8471-6726	1	HOSE ASSY
12	8866-1305	1	UNION TEE, 3/8 TUBE
13	8471-7890	2	HOSE ASSY
14	9108-3310	2	ELBOW, 90 DEGREES (includes item 16)
15	8866-2064	3	ELBOW, 90 DEGREES (includes item 2)
16	8859-1206	3	O-RING
17	7713-3197	1	HOSE ASSY

Item	Part No.	Qty.	Description Of Part
18		Ref	BRAKE VALVE (see page 10-13 for details)
19	9108-3306	1	CONNECTOR (includes item 16)
20	8866-2105	1	ELBOW, 90 DEGREES (swivel nut)
21	8471-7853	1	HOSE ASSY
22		Ref	FLOW DIVIDER VALVE (see page 10-12 for details)
*23	8471-8903	1	HOSE ASSY
24		Ref	FRONT DRIVE MOTOR (see page 10-19 for details)
25	8866-2005	1	CONNECTOR (includes o-ring)
	8859-1204	1	O-RING
26		Ref	SOLENOID VALVE ASSY (see page 10-14 for details)
27	8820-1008	2	HEX HD CAPSCREW, 1/4-20X1-3/4, GR5
28	8856-1107	2	FLAT WASHER
29	8855-1009	2	LOCKWASHER, 1/4
30	9020-4096	1	HOSE ASSY
31	9108-3222	1	STRAIGHT THREAD REDUCING CONNECTOR (includes item 32)
32	8859-1207	1	O-RING
33	8859-1205	1	O-RING

** Changed part number on item 23.*

BRAKES
Inching & Parking Brake Lines (534C-6)
Starting Serial No. 0188002
Original Issue 1-90
Revised 9-28-95

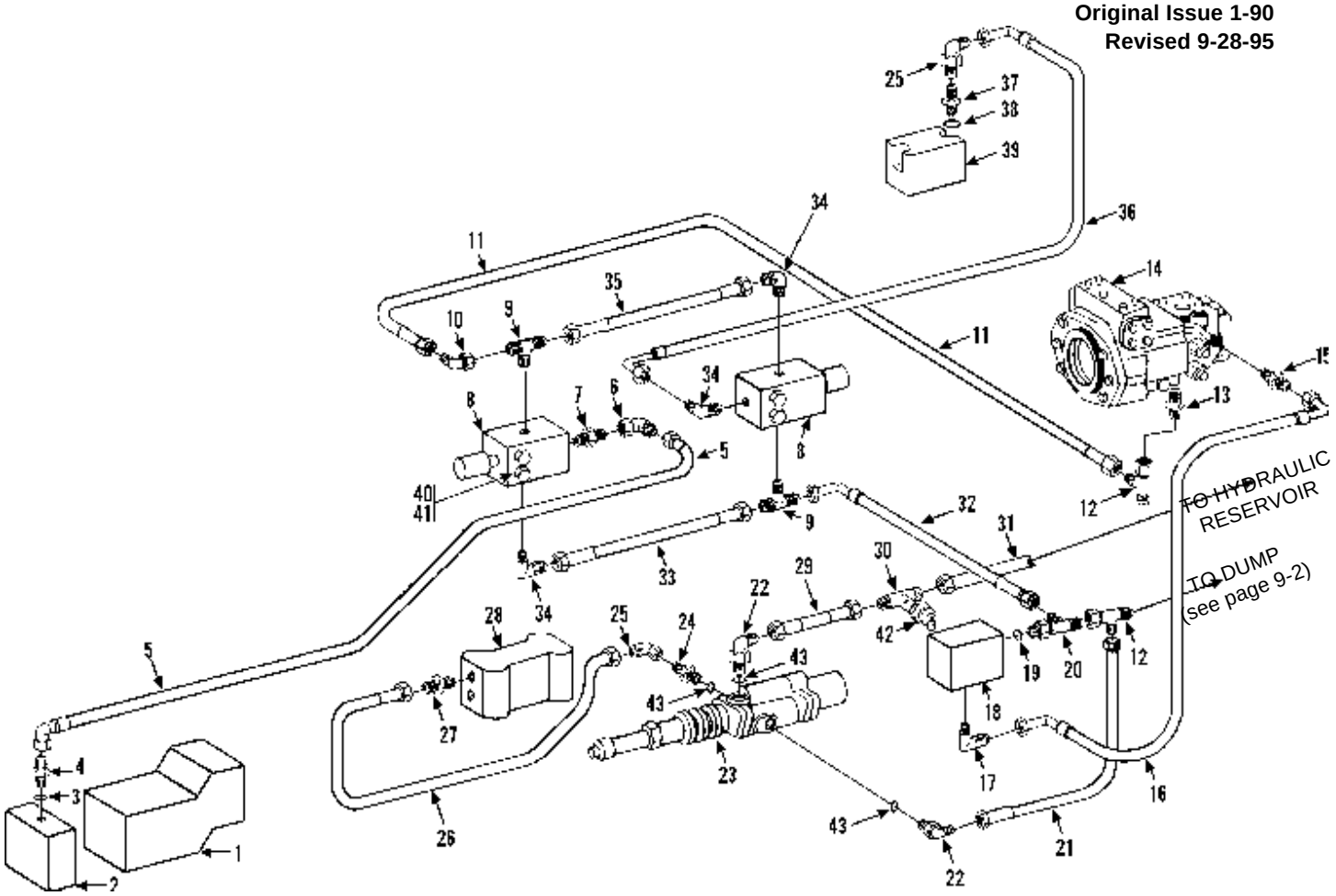

Item	Part No.	Qty.	Description Of Part
1		Ref	FRONT DRIVE MOTOR (see page 10-20 for details)
2		Ref	BRAKE ASSY (see page 6-4 for details)
3	8859-1202	1	O-RING
4	8866-2003	1	CONNECTOR (includes item 3)
5	8471-7869	1	HOSE ASSY
6	8866-2103	1	ELBOW, 90 DEGREES (swivel nut)
7	9108-3213	1	CONNECTOR
8		Ref	SOLENOID VALVE (see page 10-14 for details)
9	9108-3212	2	MALE BRANCH TEE
10	8866-2105	1	ELBOW, 90 DEGREES (swivel nut)
11	8471-7852	1	HOSE ASSY
12	8866-2239	2	SWIVEL NUT RUN TEE, 3/8 TUBE
13	9105-3426	1	CONNECTOR
14		Ref	HYDROSTATIC TRANSMISSION ASSY (see page 10-18 for details)
15	8866-2017	1	CONNECTOR (includes o-ring)
	8859-1204	1	O-RING
16	8471-7817	1	HOSE ASSY
17	8866-2064	1	ELBOW, 90 DEGREES (includes o-ring)
	8859-1204	1	O-RING
18		Ref	INCHING VALVE (see page 10-16 for details)
19	8859-1204	1	O-RING
20	8866-2139	1	RUN TEE (includes item 19)

Item	Part No.	Qty.	Description Of Part
21	8471-7890	1	HOSE ASSY
*22	9108-3310	2	ELBOW, 90 DEGREES (includes item 43)
23		Ref	BRAKE VALVE (see page 10-13 for details)
*24	9108-3306	1	CONNECTOR (includes item 43)
25	8866-2105	2	ELBOW, 90 DEGREES (swivel nut)
26	8471-7853	1	HOSE ASSY
27	9105-3426	1	CONNECTOR
28		Ref	FLOW DIVIDER VALVE (see page 10-12 for details)
29	8471-7890	1	HOSE ASSY
30	8866-1305	1	UNION TEE, 3/8 TUBE
31	8471-6358	1	HOSE ASSY
32	8471-7893	1	HOSE ASSY
33	8471-7890	1	HOSE ASSY
34	8866-1109	3	MALE ELBOW, 90 DEGREES, 3/8 TUBE
35	8471-7537	1	HOSE ASSY
36	7713-3430	1	HOSE ASSY
37	8866-2005	1	CONNECTOR (includes item 38)
38	8859-1204	1	O-RING
39	9112-3026	1	DIFFERENTIAL LOCK VALVE
40	8820-1008	4	HEX HD CAPSCREW, 1/4-20X1-3/4, GR5
41	8855-1009	4	LOCKWASHER, 1/4
42	8866-1364	1	CAP
*43	8859-1206	3	O-RING

** Changed upper left to designate model more clearly, changed quantity on item 24 & added item 43.*

BRAKES
Inching & Parking Brake Lines (534C-6)
Starting Serial No. 0188166
Original Issue 4-93
Revised 10-2-95

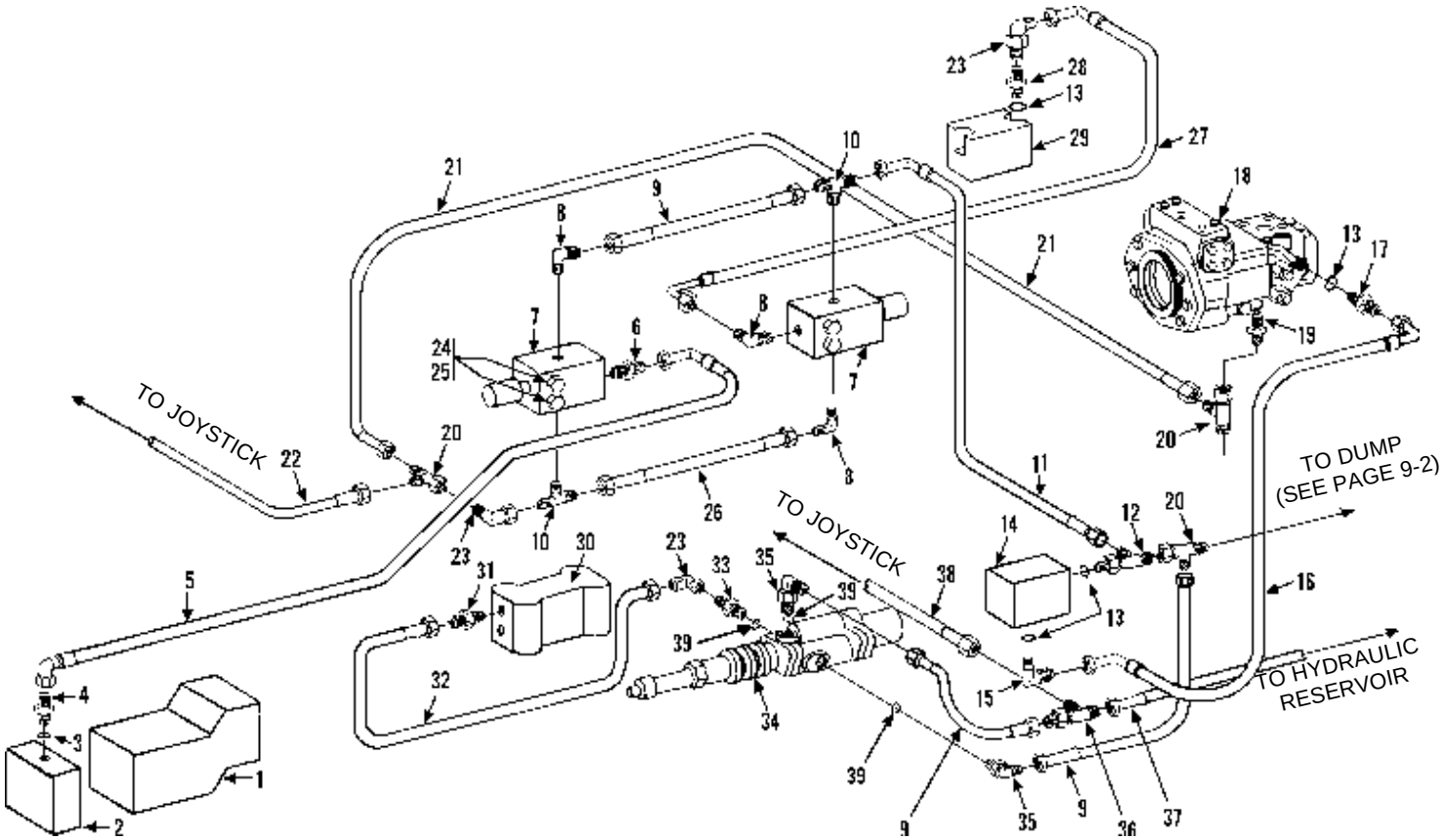

Item	Part No.	Qty.	Description Of Part
1		Ref	FRONT DRIVE MOTOR (see page 10-20 for details)
2		Ref	BRAKE ASSY (see page (6-4 for details)
3	8859-1202	1	O-RING
4	8866-2003	1	CONNECTOR (includes item 3)
5	8471-7869	1	HOSE ASSY
6	9108-3213	1	CONNECTOR
7		Ref	SOLENOID VALVE (see page 10-14 for details)
8	8866-1109	3	MALE ELBOW, 90 DEGREES, 3/8 TUBE
9	8471-7890	3	HOSE ASSY
10	9108-3212	2	MALE BRANCH TEE
11	8471-7893	1	HOSE ASSY
12	8866-2139	1	RUN TEE (includes item 13)
13	8859-1204	4	O-RING
14		Ref	INCHING VALVE (see page 10-16 for details)
15	8866-2064	1	ELBOW, 90 DEGREES (includes item 13)
16	8471-7817	1	HOSE ASSY
17	8866-2017	1	CONNECTOR (includes item 13)
18		Ref	HYDROSTATIC TRANSMISSION ASSY (see page 10-18 for details)

Item	Part No.	Qty.	Description Of Part
19	9105-3426	1	CONNECTOR
20	8866-2239	2	SWIVEL NUT RUN TEE, 3/8 TUBE
21	8471-7852	1	HOSE ASSY
22	9020-4096	1	HOSE ASSY
23	8866-2105	3	ELBOW, 90 DEGREES (swivel nut)
24	8820-1008	4	HEX HD CAPSCREW, 1/4-20X1-3/4, GR5
25	8855-1009	4	LOCKWASHER, 1/4
26	8471-7537	1	HOSE ASSY
27	7713-3430	1	HOSE ASSY
28	8866-2005	1	CONNECTOR (includes item 13)
29	9112-3026	1	DIFFERENTIAL LOCK VALVE
30		Ref	FLOW DIVIDER VALVE (see page 10-12 for details)
31	9105-3426	1	CONNECTOR
32	8471-7853	1	HOSE ASSY
*33	9108-3306	1	CONNECTOR (includes item 39)
34		Ref	BRAKE VALVE (see page 10-13 for details)
*35	9108-3310	2	ELBOW, 90 DEGREES (includes item 39)
36	8866-1305	1	UNION TEE, 3/8 TUBE
37	8471-6358	1	HOSE ASSY
38	7713-3197	1	HOSE ASSY
*39	8859-1206	3	O-RING

** Changed upper left to designate model more clearly, added item 39.*

NOTE: STARTING SERIAL NUMBER 0288251 IS INCORRECT. DISCARD PAGE 8-5 WITH S/N 0288251 AND REPLACE IT WITH PAGE 8-5, STARTING S/N 0188251.

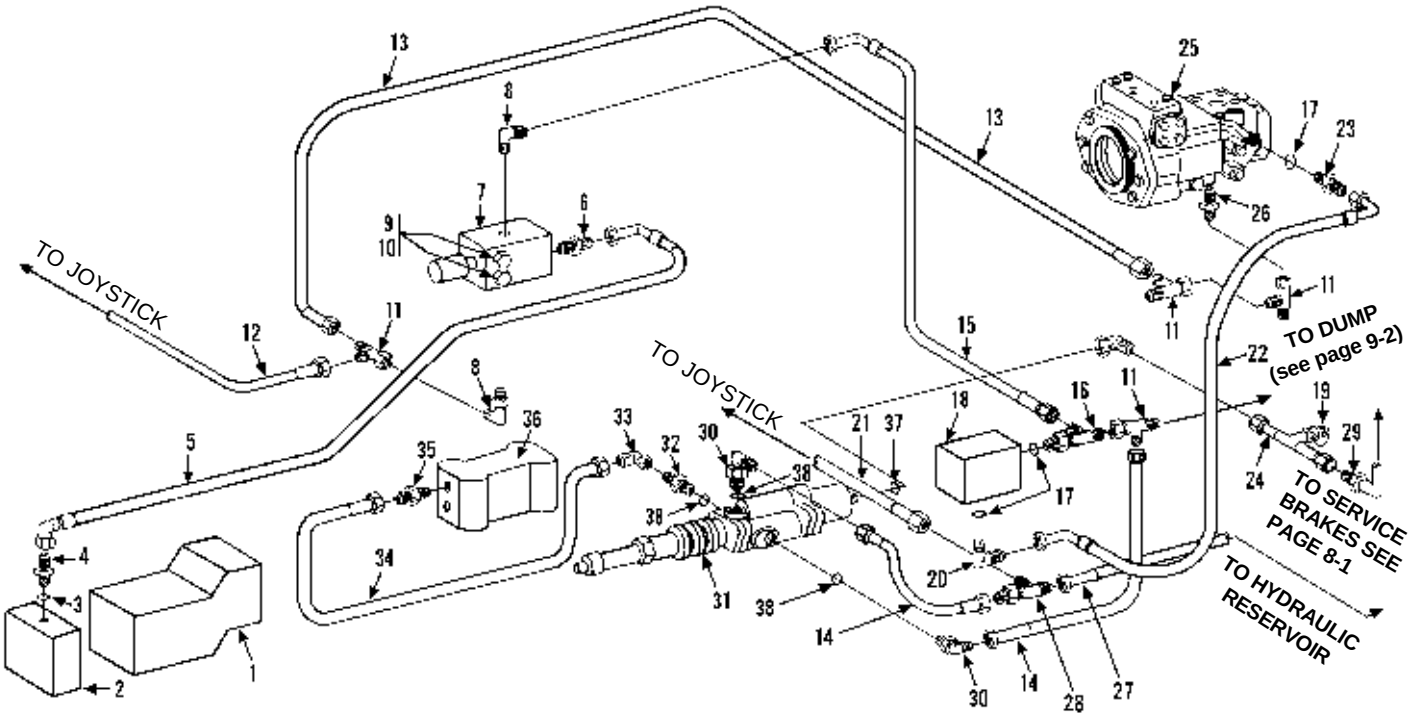

Item	Part No.	Qty.	Description Of Part
1		Ref	FRONT DRIVE MOTOR (see page 10-20 for details)
2		Ref	BRAKE ASSY (see page 6-4 for details)
3	8859-1202	1	O-RING
4	8866-2003	1	CONNECTOR (includes item 3)
5	8471-7869	1	HOSE ASSY
6	9108-3213	1	CONNECTOR
7		Ref	SOLENOID VALVE ASSY(see page 10-14 for details)
8	8866-1109	2	MALE ELBOW, 90 DEGREES, 3/8 TUBE
9	8820-1008	2	HEX HD CAPSCREW, 1/4-20X1-3/4, GR5
10	8855-1009	2	LOCKWASHER, 1/4
11	8866-2239	3	SWIVEL NUT RUN TEE, 3/8 TUBE
12	9020-4096	1	HOSE ASSY
13	8471-7852	1	HOSE ASSY
14	8471-7890	2	HOSE ASSY
15	8471-7889	1	HOSE ASSY
16	8866-2139	1	RUN TEE (includes item 17)
17	8859-1204	3	O-RING
18		Ref	INCHING VALVE (see page 10-16 for details)

Item	Part No.	Qty.	Description Of Part
19	7713-3089	1	TEST FITTING
20	8866-2064	1	ELBOW, 90 DEGREES (includes item 17)
21	7713-3197	1	HOSE ASSY
22	8471-7817	1	HOSE ASSY
23	8866-2017	1	CONNECTOR (includes item 17)
24	9104-3163	1	TUBE ASSY
25		Ref	HYDROSTATIC TRANSMISSION ASSY (see page 10-18 for details)
26	9105-3426	1	CONNECTOR
27	8471-6726	1	HOSE ASSY
28	8866-1305	1	UNION TEE, 3/8 TUBE
29	8471-8021	1	HOSE ASSY
*30	9108-3310	2	ELBOW, 90 DEGREES (includes item 38)
31		Ref	BRAKE VALVE (see page 10-13 for details)
*32	9108-3306	1	CONNECTOR (includes item 38)
33	8866-2105	2	ELBOW, 90 DEGREES (swivel nut)
34	8471-7853	1	HOSE ASSY
35	9105-3426	1	CONNECTOR
36		Ref	FLOW DIVIDER VALVE (see page 10-12 for details)
37	9020-7856	1	COPPER GASKET
*38	8859-1206	3	O-RING

** Changed upper left to designate model more clearly, added item 38. Also S/N 0288251 is incorrect replace page 8-5 S/N 0288251 with page 8-5 starting S/N 0188251.*

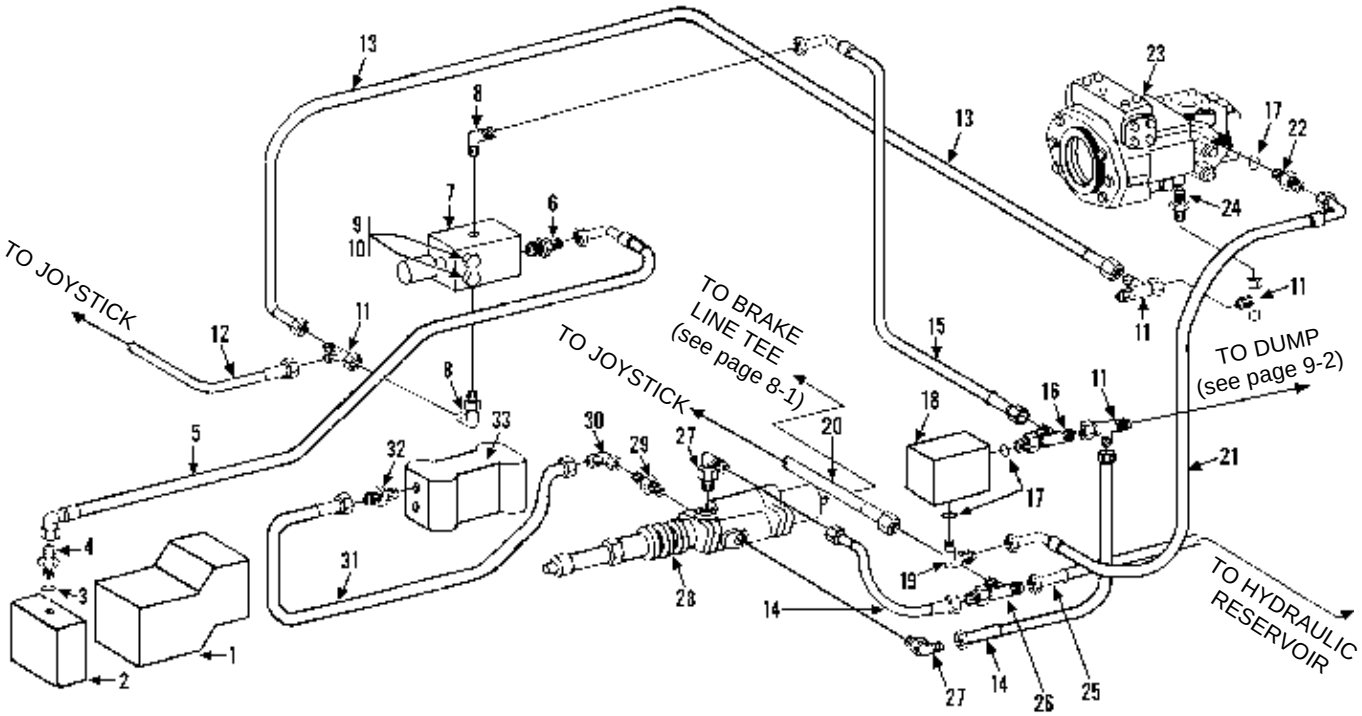

Item	Part No.	Qty.	Description Of Part
1		Ref	FRONT DRIVE MOTOR (see page 10-20 for details)
2		Ref	BRAKE ASSY (see page 6-4 for details)
3	8859-1202	1	O-RING
4	8866-2003	1	CONNECTOR (includes item 3)
5	8471-7869	1	HOSE ASSY
6	8866-2003	1	CONNECTOR
7		Ref	SOLENOID VALVE ASSY (see page 10-14 for details)
8	8866-2064	2	MALE ELBOW, 90 DEGREES (includes item 17)
9	8820-1008	2	HEX HD CAPSCREW, 1/4-20X1-3/4, GR5
10	8855-1009	2	LOCKWASHER, 1/4
11	8866-2239	3	SWIVEL NUT RUN TEE, 3/8 TUBE
12	8471-7458	1	HOSE ASSY
13	8471-7852	1	HOSE ASSY
14	8471-7890	2	HOSE ASSY
15	8471-7889	1	HOSE ASSY
16	8866-2139	1	RUN TEE (includes item 17)
17	8859-1204	3	O-RING

Item	Part No.	Qty.	Description Of Part
18		Ref	INCHING VALVE (see page 10-16 for details)
19	8866-2064	1	ELBOW, 90 DEGREES (includes item 17)
20	7713-3197	1	HOSE ASSY
21	8471-7817	1	HOSE ASSY
22	8866-2017	1	CONNECTOR (includes item 17)`
23		Ref	HYDROSTATIC TRANSMISSION ASSY (see page 10-18 for details)
24	9105-3426	1	CONNECTOR
25	8471-6726	1	HOSE ASSY
26	8866-1305	1	UNION TEE, 3/8 TUBE
27	9108-3310	2	ELBOW, 90 DEGREES
28		Ref	BRAKE VALVE (see page 10-13 for details)
29	9108-3306	1	CONNECTOR
30	8866-2105	2	ELBOW, 90 DEGREES (swivel nut)
31	8471-7853	1	HOSE ASSY
32	9105-3426	1	CONNECTOR
33		Ref	FLOW DIVIDER VALVE (see page 10-12 for details)

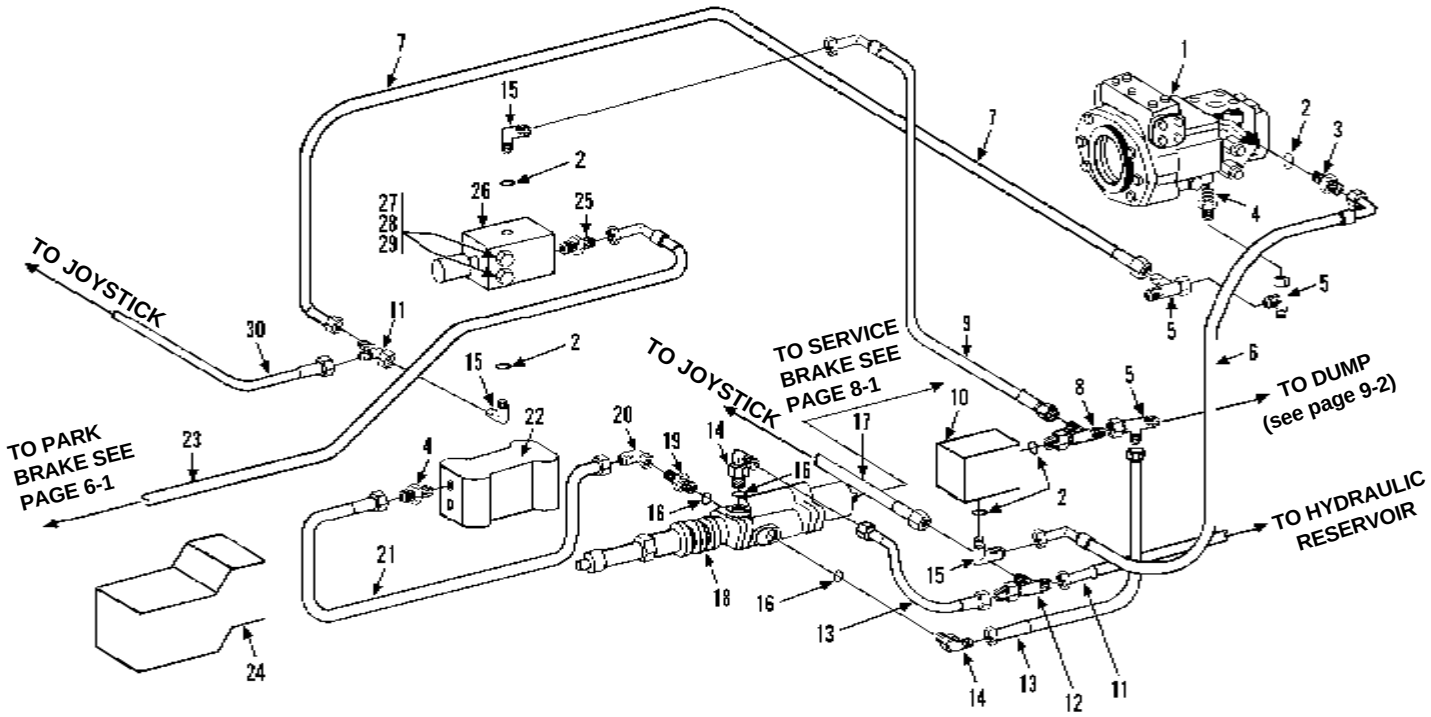

Item	Part No.	Qty.	Description Of Part
1		Ref	HYDROSTATIC TRANSMISSION ASSY (see page 10-18 for details)
2	8859-1204	5	O-RING
3	8866-2017	1	CONNECTOR (includes item 2)
4	9105-3426	2	CONNECTOR (includes o-ring)
	8859-1207	2	O-RING
5	8866-2239	3	SWIVE NUT RUN TEE, 3/8 TUBE
6	8471-7817	1	HOSE ASSY
7	8471-7852	1	HOSE ASSY
8	8866-2139	1	RUN TEE (includes item 2)
9	8471-7889	1	HOSE ASSY
10		Ref	INCHING VALVE (see page 10-16 for details)
11	8471-6726	1	HOSE ASSY
12	8866-1305	1	UNION TEE, 3/8 TUBE
13	8471-7890	2	HOSE ASSY
14	9108-3310	2	ELBOW, 90 DEGREES (includes item 16)
15	8866-2064	3	ELBOW, 90 DEGREES (includes item 2)
16	8859-1206	3	O-RING

Item	Part No.	Qty.	Description Of Part
17	7713-3197	1	HOSE ASSY
18		Ref	BRAKE VALVE (see page 10-13 for details)
19	9108-3306	1	CONNECTOR (includes item 16)
20	8866-2105	1	ELBOW, 90 DEGREES (swivel nut)
21	8471-7853	1	HOSE ASSY
22		Ref	FLOW DIVIDER VALVE (see page 10-12 for details)
*23	8471-8903	1	HOSE ASSY
24		Ref	FRONT DRIVE MOTOR (see page 10-20 for details)
25	8866-2005	1	CONNECTOR (includes o-ring)
	8859-1204	1	O-RING
26		Ref	SOLENOID VALVE ASSY (see page 10-14 for details)
27	8820-1008	2	HEX HD CAPSCREW, 1/4-20X1-3/4, GR5
28	8856-1107	2	FLAT WASHER
29	8855-1009	2	LOCKWASHER, 1/4
30	9020-4096	1	HOSE ASSY

** Changed part number on item 23.*

BRAKES
Inching & Parking Brake Lines (534C-6)
Starting Serial No. 0388349
Original Issue 6-96
Revised 4-1-97

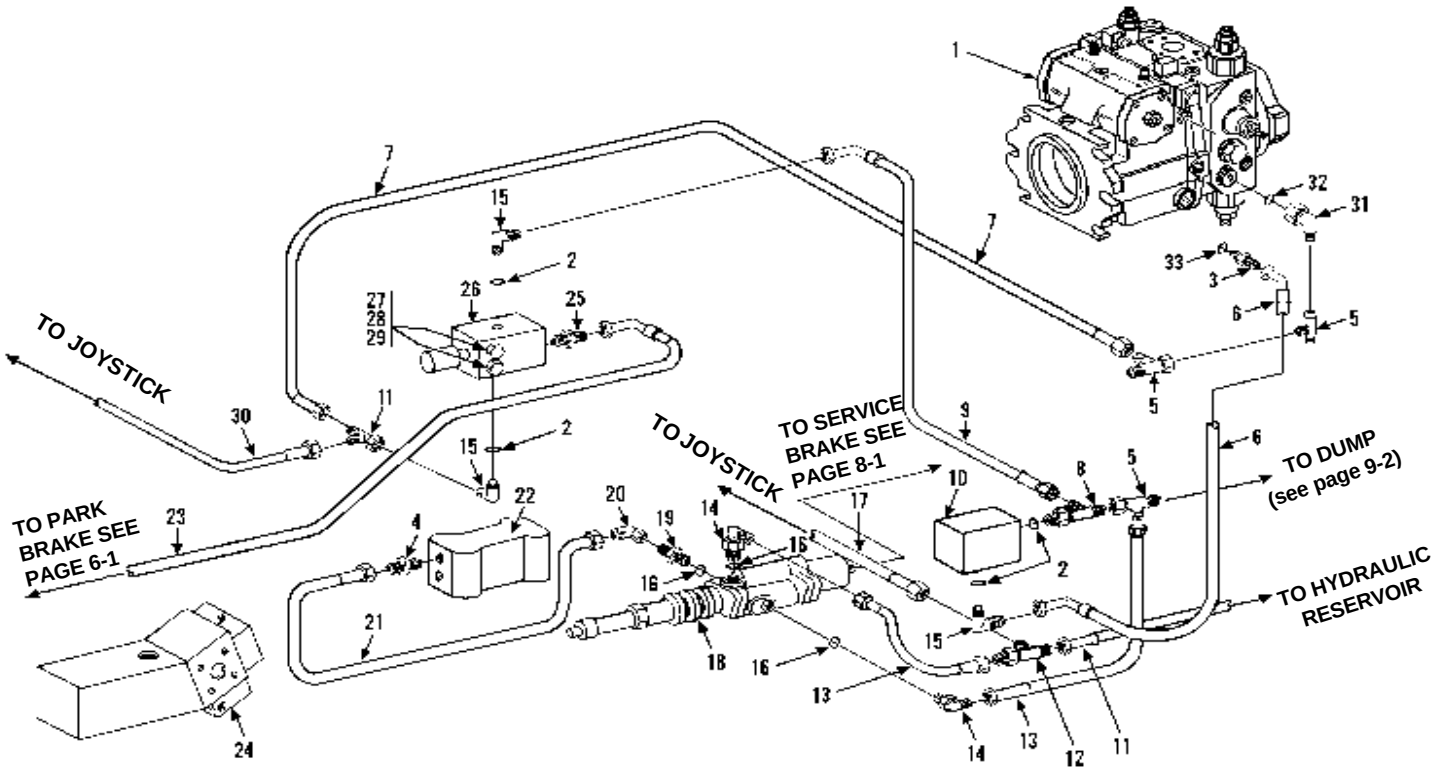

Item	Part No.	Qty.	Description Of Part
1		Ref	HYDROSTATIC TRANSMISSION ASSY (see page 10-18 for details)
2	8859-1204	5	O-RING
3	8866-2018	1	CONNECTOR (includes item 33)
4	9105-3426	2	CONNECTOR (includes o-ring)
	8859-1207	2	O-RING
5	8866-2239	3	SWIVE NUT RUN TEE, 3/8 TUBE
6	8471-7341	1	HOSE ASSY
7	8471-7852	1	HOSE ASSY
8	8866-2139	1	RUN TEE (includes item 2)
9	8471-7889	1	HOSE ASSY
10		Ref	INCHING VALVE (see page 10-16 for details)
11	8471-6726	1	HOSE ASSY
12	8866-1305	1	UNION TEE, 3/8 TUBE
13	8471-7890	2	HOSE ASSY
14	9108-3310	2	ELBOW, 90 DEGREES (includes item 16)
15	8866-2064	3	ELBOW, 90 DEGREES (includes item 2)
16	8859-1206	3	O-RING
17	7713-3197	1	HOSE ASSY

Item	Part No.	Qty.	Description Of Part
18		Ref	BRAKE VALVE (see page 10-13 for details)
19	9108-3306	1	CONNECTOR (includes item 16)
20	8866-2105	1	ELBOW, 90 DEGREES (swivel nut)
21	8471-7853	1	HOSE ASSY
22		Ref	FLOW DIVIDER VALVE (see page 10-12 for details)
*23	8471-8903	1	HOSE ASSY
24		Ref	FRONT DRIVE MOTOR (see page 10-20 for details)
25	8866-2005	1	CONNECTOR (includes o-ring)
	8859-1204	1	O-RING
26		Ref	SOLENOID VALVE ASSY (see page 10-14 for details)
27	8820-1008	2	HEX HD CAPSCREW, 1/4-20X1-3/4, GR5
28	8856-1107	2	FLAT WASHER
29	8855-1009	2	LOCKWASHER, 1/4
30	9020-4096	1	HOSE ASSY
31	9108-3222	1	STRAIGHT THREAD REDUCING CONNECTOR (includes item 32)
32	8859-1207	1	O-RING
33	8859-1205	1	O-RING

** Changed part number on item 23.*

HYDRAULIC CIRCUITS
Oil Supply & Pressure Lines
Starting Serial No. 0188002
Original Issue 1-90
Revised 10-24-03

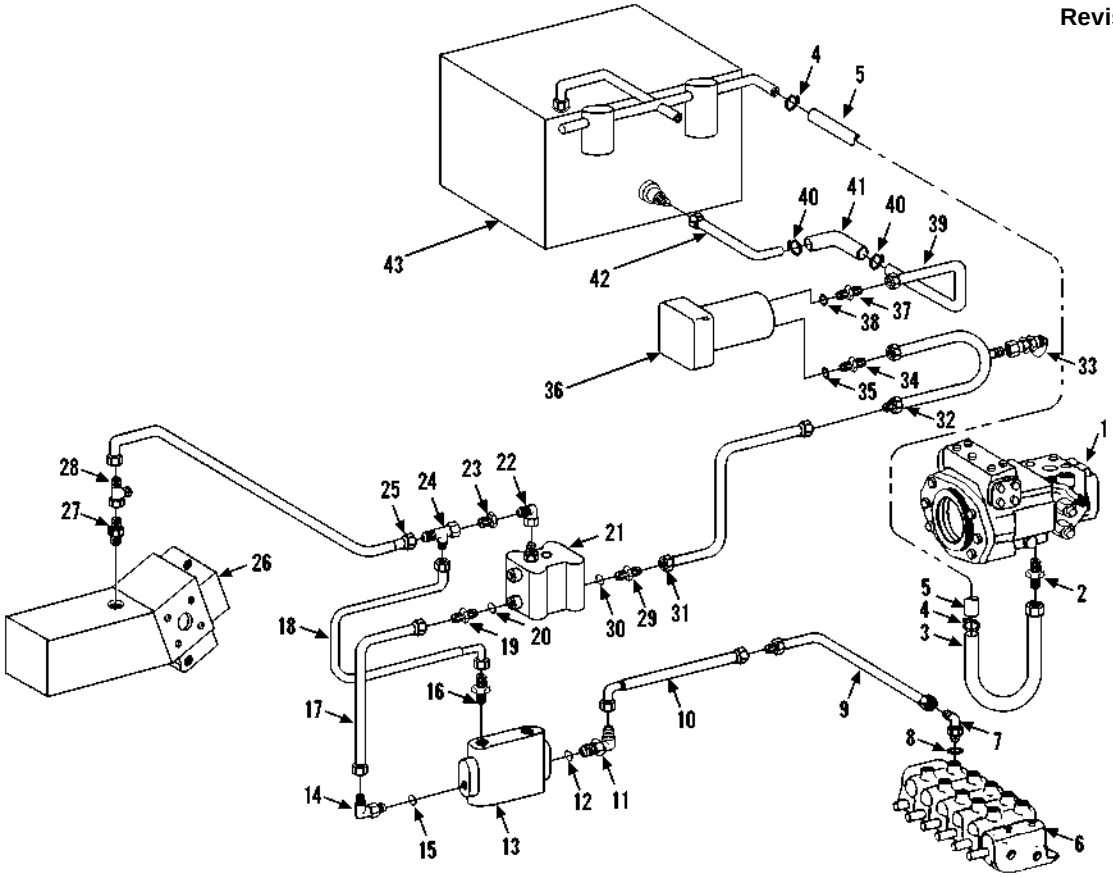

Item	Part No.	Qty.	Description Of Part
1		Ref	HYDROSTATIC DRIVE TRANSMISSION, (see page 10-18 for details)
2	9108-3245	1	STR. THREAD CONNECTOR
3	9108-3118	1	INTAKE TUBE
4	9002-8695	2	BAND CLAMP
* 5	9108-3246	1	HOSE
6		Ref	MAIN HYDRAULIC CONTROL VALVE - 534C-6 (see page 10-9 for details)
7	8866-2067	1	ELBOW, 90 DEGREES (includes item 8)
8	8859-1207	1	O-RING
9	9108-3232	1	TUBE ASSY
10	8471-7931	1	HOSE ASSY
11	8866-2061	1	ELBOW, 90 DEGREES (includes item 12)
12	8859-1209	1	O-RING
13		Ref	PRIORITY FLOW CONTROL VALVE, (see page 10-11 for details)
14	8866-2061	1	ELBOW, 90 DEGREES (includes item 15)
15	8859-1209	1	O-RING
16	8366-1316	1	STR. THREAD CONNECTOR
17	9108-3293	1	TUBE ASSY
18	8471-7803	1	HOSE ASSY
19	8366-2008	1	STR. THREAD CONNECTOR, (includes item 20)
20	8859-1207	1	O-RING

Item	Part No.	Qty.	Description Of Part
21		Ref	FLOW DIVIDER VALVE, (see page 10-12 for details)
22	8866-2106	1	ELBOW, 90 DEGREES (swivel nut)
23	8688-3469	1	REDUCER
24	8866-2239	1	SWIVEL NUT RUN TEE, 3/8 TUBE
25	8471-7832	1	HOSE ASSY
26		Ref	FRT. DRIVE MOTOR ASSY - 534C-6 (see page 10-20 for details)
		Ref	FRT. DRIVE MOTOR ASSY -532C-6 (see page 10-19 for details)
27	9108-3306	1	ADAPTER (includes o-ring)
	8859-1206	1	O-RING
28	8866-2239	1	SWIVEL NUT RUN TEE, 3/8 TUBE
29	8866-2008	1	CONNECTOR (includes item 30)
30	8859-1207	1	0-RING
31	8471-7907	1	HOSE ASSY
32	9108-3233	1	TUBE ASSY
33	7713-3089	1	TEST FITTING
34	8866-2010	1	CONNECTOR (includes item 35)
35	8859-1209	1	O-RING
36		Ref	MAIN HYDRAULIC PUMP, (see page 10-17 for details)
37	8866-2011	1	CONNECTOR (includes item 38)
38	8859-1210	1	O-RING
39	9108-3144	1	SUCTION TUBE
40	9002-8482	2	HOSE CLAMP
41	7713-3166	1	HOSE ASSY
42	9108-3145	1	SUCTION TUBE
43		Ref	HYDRAULIC RESERVOIR ASSY (see page 10-22 for details)

** Changed description on item 5.*

HYDRAULIC CIRCUITS
Oil Supply & Pressure Lines

Starting Serial No. 0388349
Original Issue 6-96
Revised 10-24-03

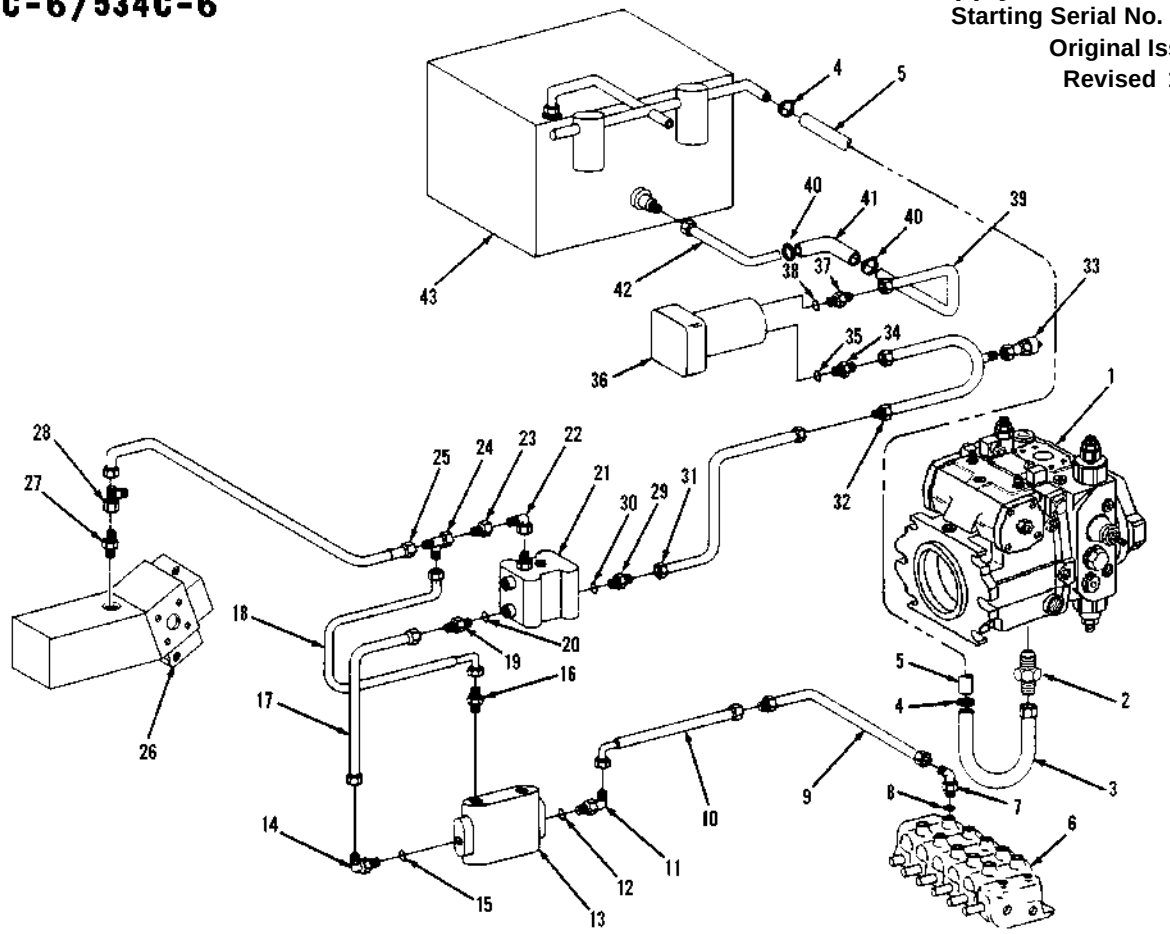

Item	Part No.	Qty.	Description Of Part
1		Ref	HYDROSTATIC DRIVE TRANSMISSION, (see page 10-18 for details)
2	8866-2011	1	STR. THREAD CONNECTOR (includes o-ring)
	8859-1210	1	O-RING
3	9114-3087	1	INTAKE TUBE
4	9002-8695	2	BAND CLAMP
* 5	9108-3246	1	HOSE
6		Ref	MAIN CONTROL VALVE (see page 10-9 for details)
7	8866-2067	1	ELBOW, 90 DEGREES (includes item 8)
8	8859-1207	1	O-RING
9	9108-3232	1	TUBE ASSY
10	8471-7931	1	HOSE ASSY
11	8866-2061	1	ELBOW, 90 DEGREES (includes item 12)
12	8859-1209	1	O-RING
13		Ref	PRIORITY FLOW CONTROL VALVE, (see page 10-11 for details)
14	8866-2061	1	ELBOW, 90 DEGREES (includes item 15)
15	8859-1209	1	O-RING
16	8366-1316	1	STR. THREAD CONNECTOR
17	9108-3293	1	TUBE ASSY
18	8471-7803	1	HOSE ASSY
19	8366-2008	1	STR. THREAD CONNECTOR, (includes item 20)
20	8859-1207	1	O-RING

Item	Part No.	Qty.	Description Of Part
21		Ref	FLOW DIVIDER VALVE, (see page 10-12 for details)
22	8866-2106	1	ELBOW, 90 DEGREES (swivel nut)
23	8688-3469	1	REDUCER
24	8866-2239	1	SWIVEL NUT RUN TEE, 3/8 TUBE
25	8471-7832	1	HOSE ASSY
26		Ref	FRT. DRIVE MOTOR ASSY - 534C-6 (see page 10-20 for details)
		Ref	FRT. DRIVE MOTOR ASSY -532C-6 (see page 10-19 for details)
27	9105-3426	1	ADAPTER (includes o-ring)
	8859-1207	1	O-RING
28	8866-2239	1	SWIVEL NUT RUN TEE, 3/8 TUBE
29	8866-2008	1	CONNECTOR (includes item 30)
30	8859-1207	1	0-RING
31	8471-7907	1	HOSE ASSY
32	9108-3233	1	TUBE ASSY
33	7713-3089	1	TEST FITTING
34	8866-2010	1	CONNECTOR (includes item 35)
35	8859-1209	1	O-RING
36		Ref	MAIN HYDRAULIC PUMP, (see page 10-17 for details)
37	8866-2011	1	CONNECTOR (includes item 38)
38	8859-1210	1	O-RING
39	9108-3144	1	SUCTION TUBE
40	9002-8482	2	HOSE CLAMP
41	7713-3166	1	HOSE ASSY
42	9108-3145	1	SUCTION TUBE
43		Ref	HYDRAULIC RESERVOIR ASSY (see page 10-22 for details)

** Changed description on item 5.*

HYDRAULIC CIRCUITS
Oil Supply & Pressure Lines
Starting Serial No. 0488238
Original Issue 11-97
Revised 10-24-03

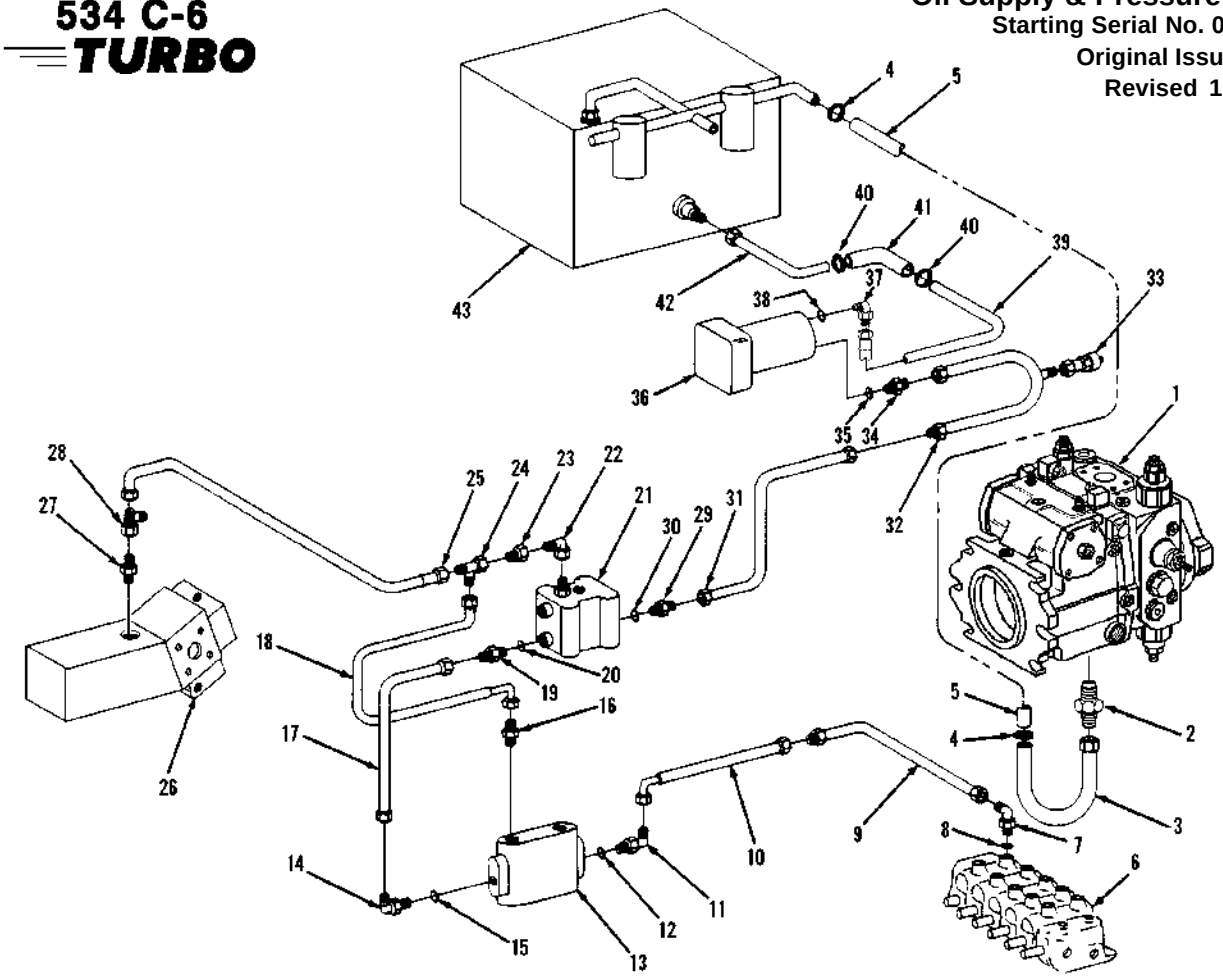

Item	Part No.	Qty.	Description Of Part
1		Ref	HYDROSTATIC DRIVE TRANSMISSION, (see page 10-18 for details)
2	8866-2011	1	STR. THREAD CONNECTOR (includes o-ring)
	8859-1210	1	O-RING
3	9114-3087	1	INTAKE TUBE
4	9002-8695	2	BAND CLAMP
* 5	9108-3246	1	HOSE
6		Ref	MAIN CONTROL VALVE (see page 10-9 for details)
7	8866-2067	1	ELBOW, 90 DEGREES (includes item 8)
8	8859-1207	1	O-RING
9	9108-3232	1	TUBE ASSY
10	8471-7931	1	HOSE ASSY
11	8866-2061	1	ELBOW, 90 DEGREES (includes item 12)
12	8859-1209	1	O-RING
13		Ref	PRIORITY FLOW CONTROL VALVE, (see page 10-11 for details)
14	8866-2061	1	ELBOW, 90 DEGREES (includes item 15)
15	8859-1209	1	O-RING
16	8366-1316	1	STR. THREAD CONNECTOR
17	9108-3293	1	TUBE ASSY
18	8471-7803	1	HOSE ASSY
19	8366-2008	1	STR. THREAD CONNECTOR, (includes item 20)

Item	Part No.	Qty.	Description Of Part
20	8859-1207	1	O-RING
21		Ref	FLOW DIVIDER VALVE, (see page 10-12 for details)
22	8866-2106	1	ELBOW, 90 DEGREES (swivel nut)
23	8688-3469	1	REDUCER
24	8866-2239	1	SWIVEL NUT RUN TEE, 3/8 TUBE
25	8471-7832	1	HOSE ASSY
26		Ref	FRT. DRIVE MOTOR ASSY (see page 10-20 for details)
27	9105-3426	1	ADAPTER (includes o-ring)
	8859-1207	1	O-RING
28	8866-2239	1	SWIVEL NUT RUN TEE, 3/8 TUBE
29	8866-2008	1	CONNECTOR (includes item 30)
30	8859-1207	1	0-RING
31	8471-8758	1	HOSE ASSY
32	9132-3023	1	TUBE ASSY
33	9114-3172	1	TEST FITTING
34	8866-2010	1	CONNECTOR (includes item 35)
35	8859-1209	1	O-RING
36		Ref	MAIN HYDRAULIC PUMP, (see page 10-17 for details)
37	8866-2090	1	CONNECTOR (includes item 38)
38	8859-1210	1	O-RING
39	9132-3022	1	SUCTION TUBE
40	9002-8482	2	HOSE CLAMP
41	7713-3166	1	HOSE ASSY
42	9108-3145	1	SUCTION TUBE
43		Ref	HYDRAULIC RESERVOIR ASSY (see page 10-22 for details)

** Changed description on item 5.*

HYDRAULIC CIRCUITS
Dump Circuit (534C-6)
Starting Serial No. 0188002
Original Issue 1-90
Revised 2-23-98

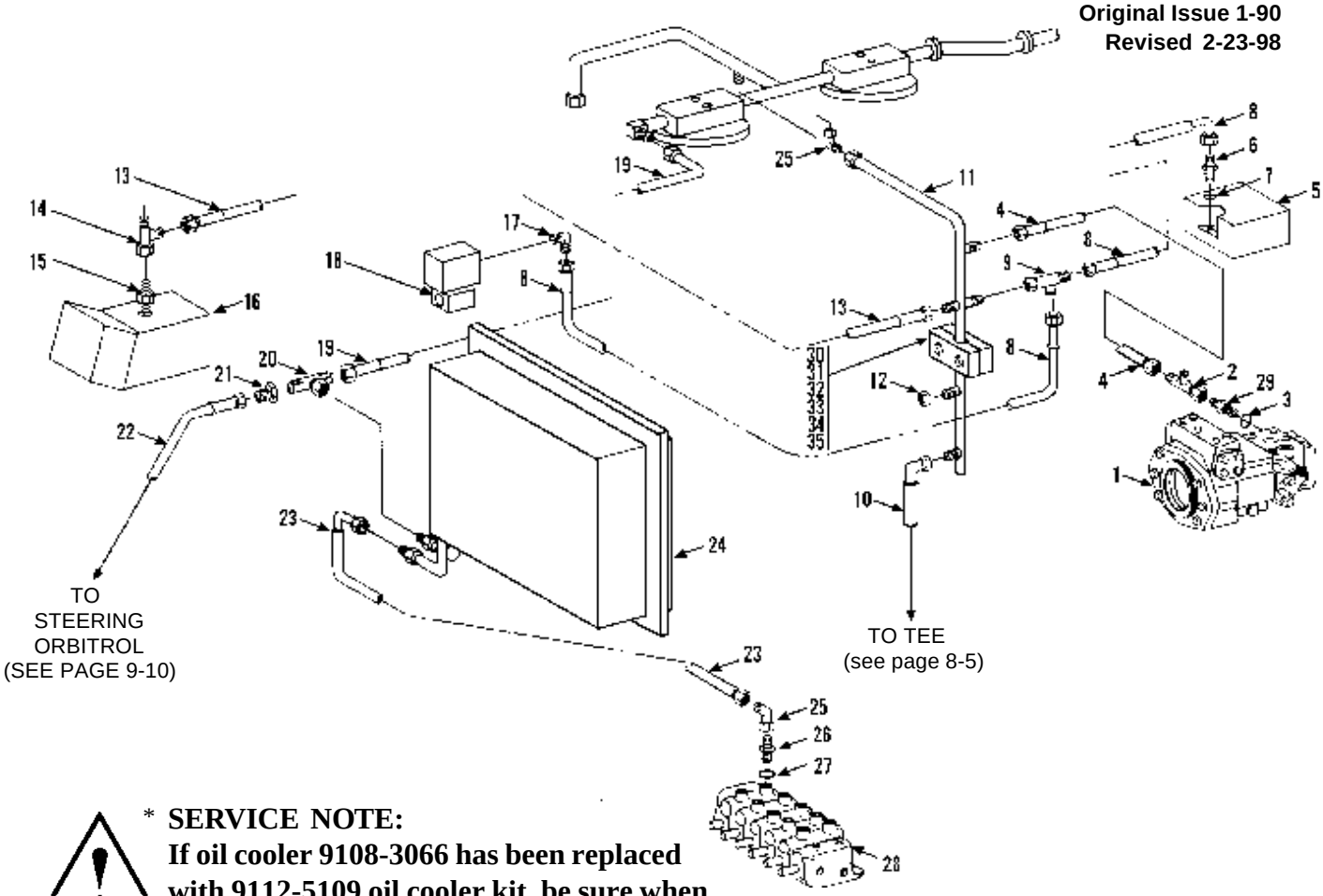

*** SERVICE NOTE:**
If oil cooler 9108-3066 has been replaced with 9112-5109 oil cooler kit, be sure when replacing item 23, the correct hose is used.

Item	Part No.	Qty.	Description Of Part
1		Ref	HYDROSTATIC DRIVE TRANSMISSION (see page 10-18 for details)
2	8866-2240	1	SWIVEL NUT RUN TEE, 1/2" TUBE
3	8859-1207	1	O-RING
4	8471-7839	1	HOSE ASSY
5		Ref	TRACTION LOCK VALVE (see page 10-25 for details)
6	8866-2005	1	CONNECTOR (includes item 7)
7	8859-1204	1	O-RING
8	8471-7930	2	HOSE ASSY
9	8866-2239	1	SWIVEL NUT RUN TEE, 3/8 TUBE
10	8471-7908	1	HOSE ASSY
11	9130-3059	1	TUBE ASSY
12	8866-1362	1	HEX CAP, 1/4 TUBE
13	8471-8999	1	HOSE ASSY
14	8866-2239	1	SWIVEL NUT RUN TEE, 3/8 TUBE
15	9108-3306	1	STR. THREAD ADAPTER (includes o-ring)
	8859-1206	1	O-RING
16		Ref	FRONT DRIVE MOTOR ASSY (see page 10-20 for details)
17	8866-1109	1	MALE ELBOW - 90 DEGREES, 3/8X3/8 TUBE
18		Ref	SOLENOID VALVE (see page 10-14 for details)

Item	Part No.	Qty.	Description Of Part
19	8471-7872	1	HOSE ASSY
20	8866-2227	1	SWIVEL NUT BRANCH TEE, 3/4 TUBE
21	8866-1345	1	REDUCER
	8866-1408	1	NUT, 3/4 TUBE
22	8471-7810	1	HOSE ASSY
*23	8471-7906	1	HOSE ASSY (use with 9108-3066)
	8471-9110	1	HOSE ASSY (use with oil cooler kit, 9112-5109)
24		Ref	OIL COOLER ASSY, (see page 5-6 for details)
25	8866-2108	2	ELBOW, 90 DEGREES, (swivel nut)
26	8866-2008	1	CONNECTOR (includes item 27)
27	8859-1207	1	O-RING
28		Ref	MAIN HYDRAULIC CONTROL VALVE ASSY (see page 10-9 for details)
29	8866-2008	1	STRAIGHT THREAD CONNECTOR (includes item 3)
30	7713-3053	1	CLAMP SET, 3/4 TUBE
31	7713-3052	1	COVER PLATE
32	8820-1010	2	HEX HD CAPSCREW, 1/4-20X2-1/4, GR5
33	8850-1004	2	HEX NUT, 1/4-20
34	8855-1009	2	LOCKWASHER, 1/4
35	8856-1107	2	FLAT WASHER, 1/4

** Added service note and additional hose to item 23.*

HYDRAULIC CIRCUITS
Dump Circuit (534C-6)
Starting Serial No. 0388349
Original Issue 6-96
Revised 2-5-98

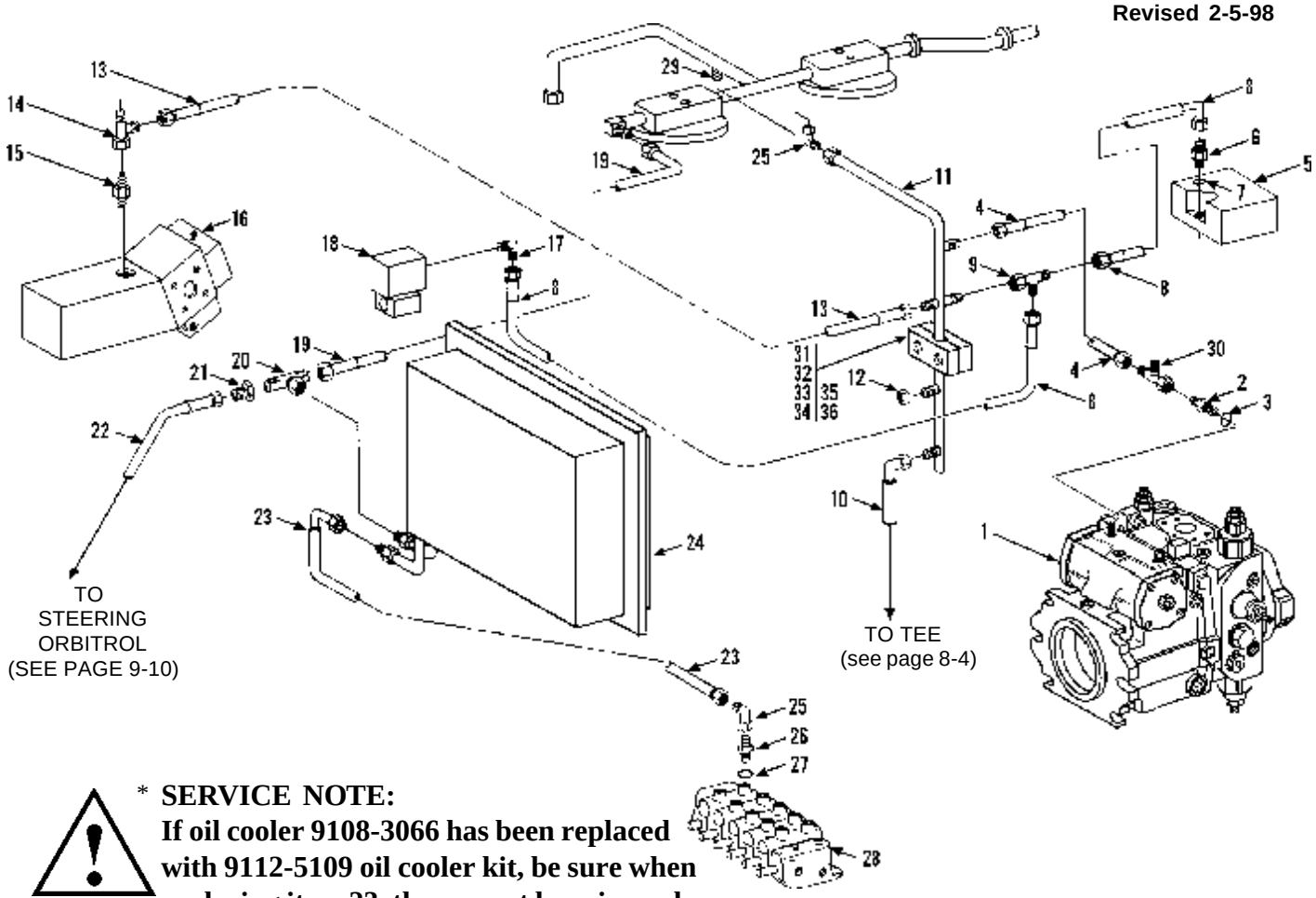

*** SERVICE NOTE:**
If oil cooler 9108-3066 has been replaced with 9112-5109 oil cooler kit, be sure when replacing item 23, the correct hose is used.

Item	Part No.	Qty.	Description Of Part
1		Ref	HYDROSTATIC TRANSMISSION (see page 10-18 for details)
2	8866-2008	1	STRAIGHT THREAD CONNECTOR (includes item 3)
3	8859-1207	1	O-RING
4	8471-7839	1	HOSE ASSY
5		Ref	TRACTION LOCK VALVE (see page 10-25 for details)
6	8866-2005	1	CONNECTOR (includes item 7)
7	8859-1204	1	O-RING
8	8471-7930	2	HOSE ASSY
9	8866-2239	1	SWIVEL NUT RUN TEE, 3/8 TUBE
10	8471-7908	1	HOSE ASSY
11	9130-3059	1	TUBE ASSY
12	8866-1362	1	HEX CAP, 1/4 TUBE
13	8471-8999	1	HOSE ASSY
14	8866-2239	1	SWIVEL NUT RUN TEE, 3/8 TUBE
15	9105-3426	1	STR. THREAD ADAPTER (includes o-ring)
	8859-1207	1	O-RING
16		Ref	FRONT DRIVE MOTOR ASSY (see page 10-20 for details)
17	8866-2064	1	ELBOW , 90 DEGREES (includes o-ring
	8859-1204	1	O-RING
18		Ref	SOLENOID VALVE (see page 10-14 for details)

Item	Part No.	Qty.	Description Of Part
19	8471-7872	1	HOSE ASSY
20	8866-2227	1	SWIVEL NUT BRANCH TEE, 3/4 TUBE
21	8866-1345	1	REDUCER (includes nut)
	8866-1408	1	NUT, 3/4 TUBE
22	8471-7810	1	HOSE ASSY
* 23	8471-7906	1	HOSE ASSY (use with 9108-3066)
	8471-9110	1	HOSE ASSY (use with oil cooler kit, 9112-5109)
24		Ref	OIL COOLER ASSY, (see page 5-6 for details)
25	8866-2108	2	ELBOW, 90 DEGREES, (swivel nut)
26	8866-2008	1	CONNECTOR (includes item 27)
27	8859-1207	1	O-RING
28		Ref	MAIN HYDRAULIC CONTROL VALVE ASSY (see page 10-9 for details)
29	8866-1010	1	MALE CONNECTOR, 3/8X1/2 TUBE
30	8866-2242	1	SWIVEL NUT RUN TEE, 1/2" TUBE
31	7713-3053	1	CLAMP SET, 3/4 TUBE
32	7713-3052	1	COVER PLATE
33	8820-1010	2	HEX HD CAPSCREW, 1/4-20X2-1/4, GR5
34	8850-1004	2	HEX NUT, 1/4-20
35	8855-1009	2	LOCKWASHER, 1/4
36	8856-1107	2	FLAT WASHER, 1/4

** Changed part number on item 23.*

HYDRAULIC CIRCUITS
Dump Circuit (534C-6)
Starting Serial No. 0488238
Original Issue 2-98
Revised 11-22-00

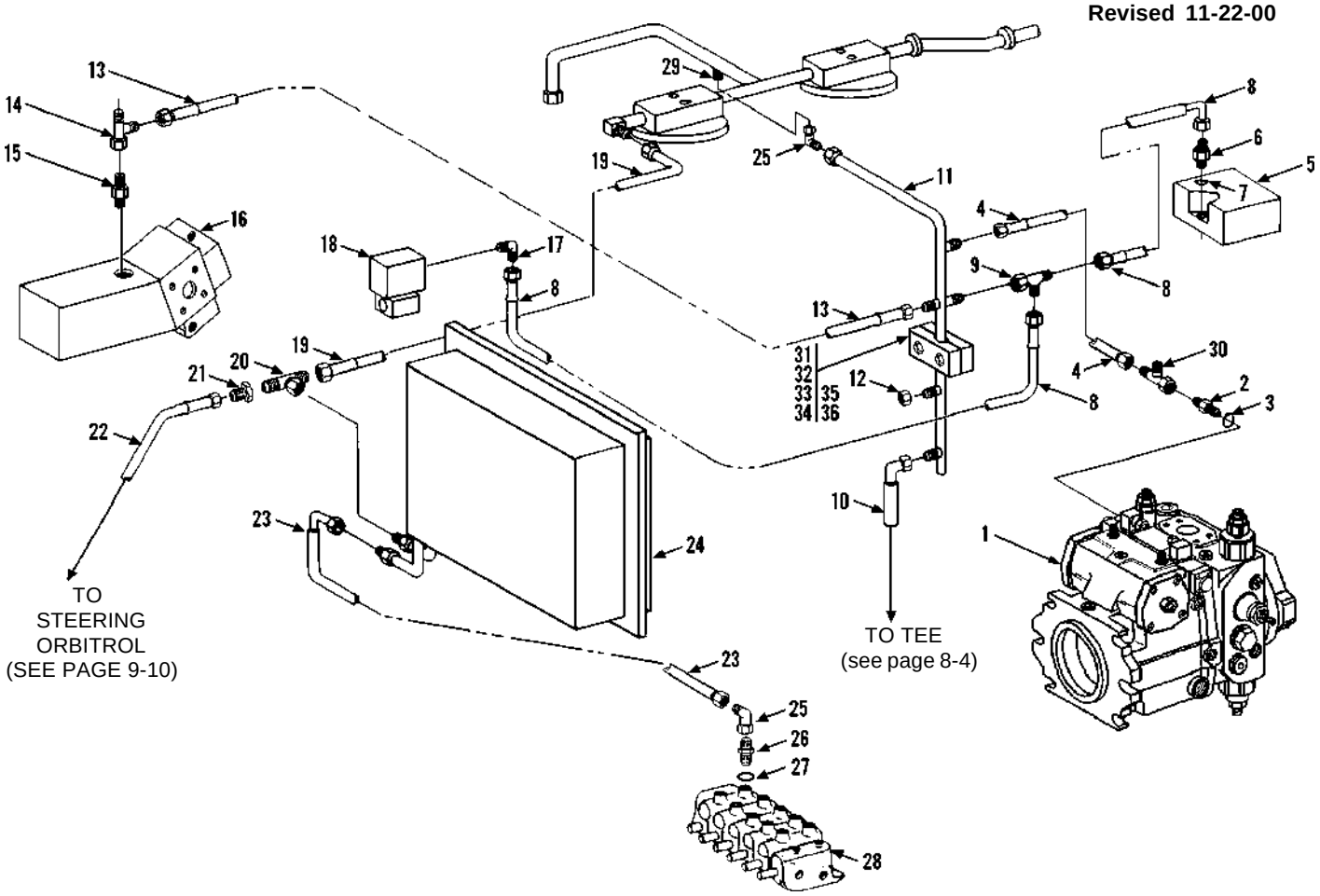

Item	Part No.	Qty.	Description Of Part
1		Ref	HYDROSTATIC TRANSMISSION, (see page 10-18 for details)
2	8866-2008	1	STRAIGHT THREAD CONNECTOR, (includes item 3)
3	8859-1207	1	O-RING
4	8471-7839	1	HOSE ASSY
5		Ref	TRACTION LOCK VALVE, (see page 10-25 for details)
6	8866-2005	1	CONNECTOR, (includes item 7)
7	8859-1204	1	O-RING
8	8471-7930	2	HOSE ASSY
9	8866-2239	1	SWIVEL NUT RUN TEE, 3/8 TUBE
10	8471-7908	1	HOSE ASSY
11	9130-3059	1	TUBE ASSY
12	8866-1362	1	HEX CAP, 1/4 TUBE
13	8471-8999	1	HOSE ASSY
14	8866-2239	1	SWIVEL NUT RUN TEE, 3/8 TUBE
15	9105-3426	1	STRAIGHT THREAD ADAPTER, (includes o-ring)
	8859-1207	1	O-RING
16		Ref	FRONT DRIVE MOTOR ASSY, (see page 10-20 for details)
17	8866-2064	1	ELBOW , 90 DEGREES, (includes o-ring)
	8859-1204	1	O-RING

Item	Part No.	Qty.	Description Of Part
18		Ref	SOLENOID VALVE, (see page 10-14 for details)
19	8471-9109	1	HOSE ASSY
20	8866-2227	1	SWIVEL NUT BRANCH TEE, 3/4 TUBE
21	8866-1345	1	REDUCER, (includes nut)
	8866-1408	1	NUT, 3/4 TUBE
22	8471-7810	1	HOSE ASSY
23	8471-9110	1	HOSE ASSY
24		Ref	OIL COOLER ASSY, (see page 5-6 for details)
25	8866-2108	2	ELBOW, 90 DEGREES, (swivel nut)
26	8866-2008	1	CONNECTOR, (includes item 27)
27	8859-1207	1	O-RING
28		Ref	MAIN HYDRAULIC CONTROL VALVE ASSY, (see page 10-9 for details)
29	8866-1010	1	MALE CONNECTOR, 3/8X1/2 TUBE
30	8866-2242	1	SWIVEL NUT RUN TEE, 1/2" TUBE
31	7713-3053	1	CLAMP SET, 3/4 TUBE
32	7713-3052	1	COVER PLATE
33	8820-1010	2	HEX HD CAPSCREW, 1/4-20X2-1/4, GR5
34	8850-1004	2	HEX NUT, 1/4-20
35	8855-1009	2	LOCKWASHER, 1/4
36	8856-1107	2	FLAT WASHER, 1/4

** Revised parts list.*

HYDRAULIC CIRCUITS
Dump Circuit (534C-6 TURBO)
Starting Serial No. 0388043
Original Issue 8-95
Revised 4-1-97

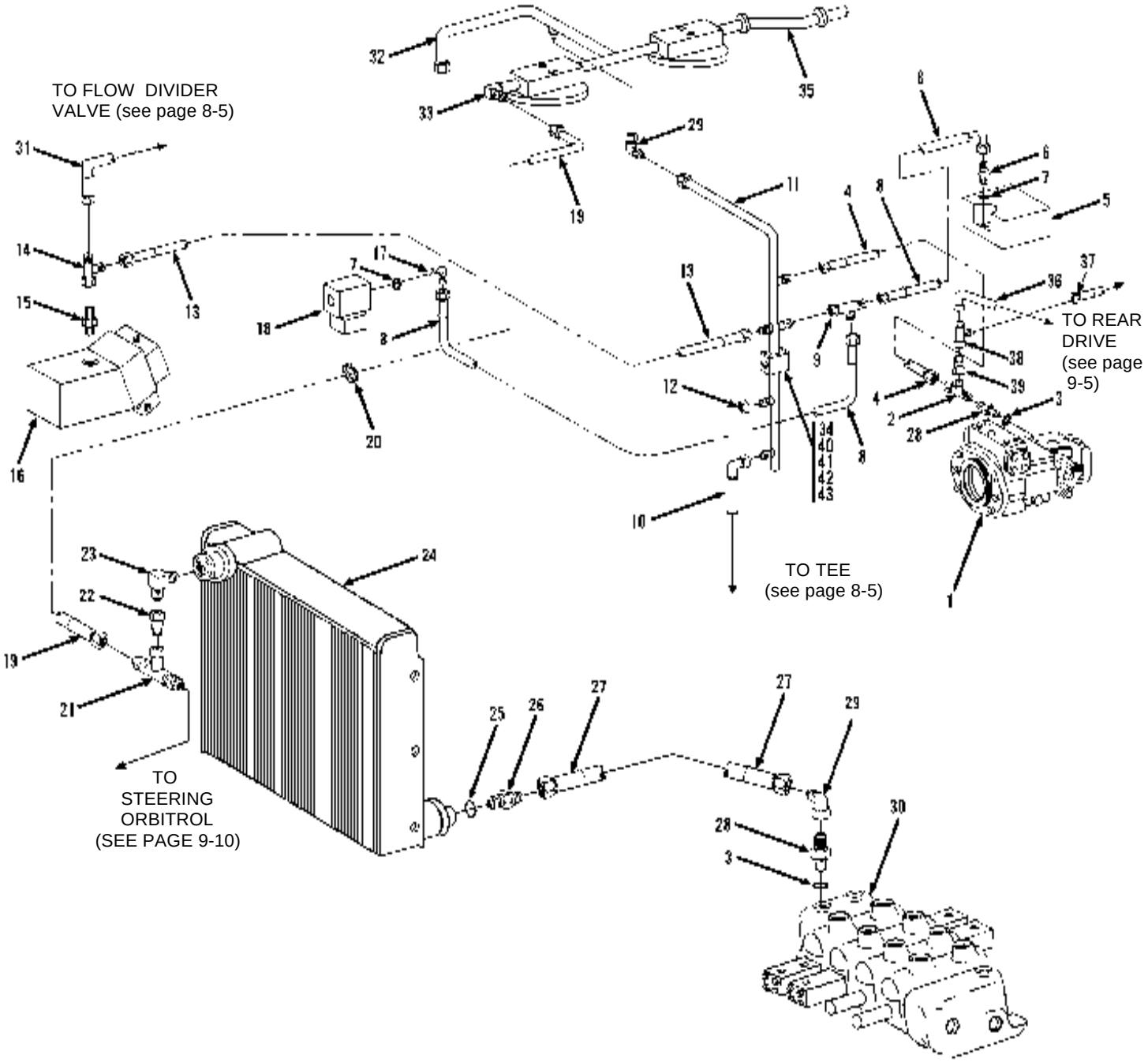

** Changed part number on item 13.*

Item	Part No.	Qty.	Description Of Part
1		Ref	HYDROSTATIC DRIVE TRANSMISSION (see page 10-18 S/N 0288568 for details)
2	8866-2242	1	SWIVEL NUT RUN TEE, 3/4 TUBE
3	8859-1207	2	O-RING (included with item 28)
4	8471-7839	1	HOSE ASSY
5		Ref	TRACTION LOCK VALVE (see page 10-25 S/N 0288568 for details)
6	8866-2005	1	CONNECTOR (includes item 7)
7	8859-1204	2	O-RING
8	8471-7930	2	HOSE ASSY
9	8866-2239	1	SWIVEL NUT RUN TEE, 3/8 TUBE
10	8471-7908	1	HOSE ASSY
11	9108-3059	1	TUBE ASSY
12	8866-1362	1	HEX CAP, 1/4 TUBE
*13	8471-8999	1	HOSE ASSY
14	8866-2239	1	SWIVEL NUT RUN TEE, 3/8 TUBE
15	9108-3306	1	STRAIGHT THREAD ADAPTER
16		Ref	FRONT DRIVE MOTOR (see page 10-20 for details)
17	8866-2064	1	ELBOW, 90 DEGREES (includes item 7)
18		Ref	SOLENOID VALVE, (see page 10-14 S/N 0288777 for details)
19	8471-8644	1	HOSE ASSY
20	8584-1150	1	CLAMP
	7714-3015	1	WHIZ LOCKNUT, 3/8-16

Item	Part No.	Qty.	Description Of Part
21	8692-1327	1	TEE
22	9132-3007	1	REDUCER
23	8362-3032	1	ELBOW, 90 DEGREES
24		Ref	OIL COOLER ASSY (see page 5-6 Turbo for details)
25		1	O-RING (included with item 26)
26	8325-1287	1	ADAPTER (includes item 25)
27	8471-8643	1	HOSE ASSY
28	8866-2008	2	STRAIGHT THREAD ADAPTER, (includes item 3)
29	8866-2108	2	ELBOW, 90 DEGREES (swivel nut)
30		Ref	MAIN CONTROL VALVE ASSY, (see page 10-9 S/N 0288568 for details)
31	8471-7832	1	HOSE ASSY
32	9130-3058	1	RESERVOIR RETURN TUBE
33	9108-3241	1	90 DEGREE CONNECTOR
34	8856-1017	2	FLAT WASHER, 1/4
35	9108-3242	1	45 DEGREE CONNECTOR
36	8471-8183	1	HOSE ASSY
37	8471-8182	1	HOSE ASSY
38	8866-2240	1	SWIVEL NUT RUN TEE, 1/2 TUBE
39	8365-1133	1	REDUCER
40	7713-3053	1	CLAMP SET
41	7713-3052	1	COVER PLATE
42	8820-1010	2	HEX HD CAPSCREW, 1/4-20X2-1/4
43	8855-1009	2	LOCKWASHER, 1/4

* *Changed part number on item 13.*

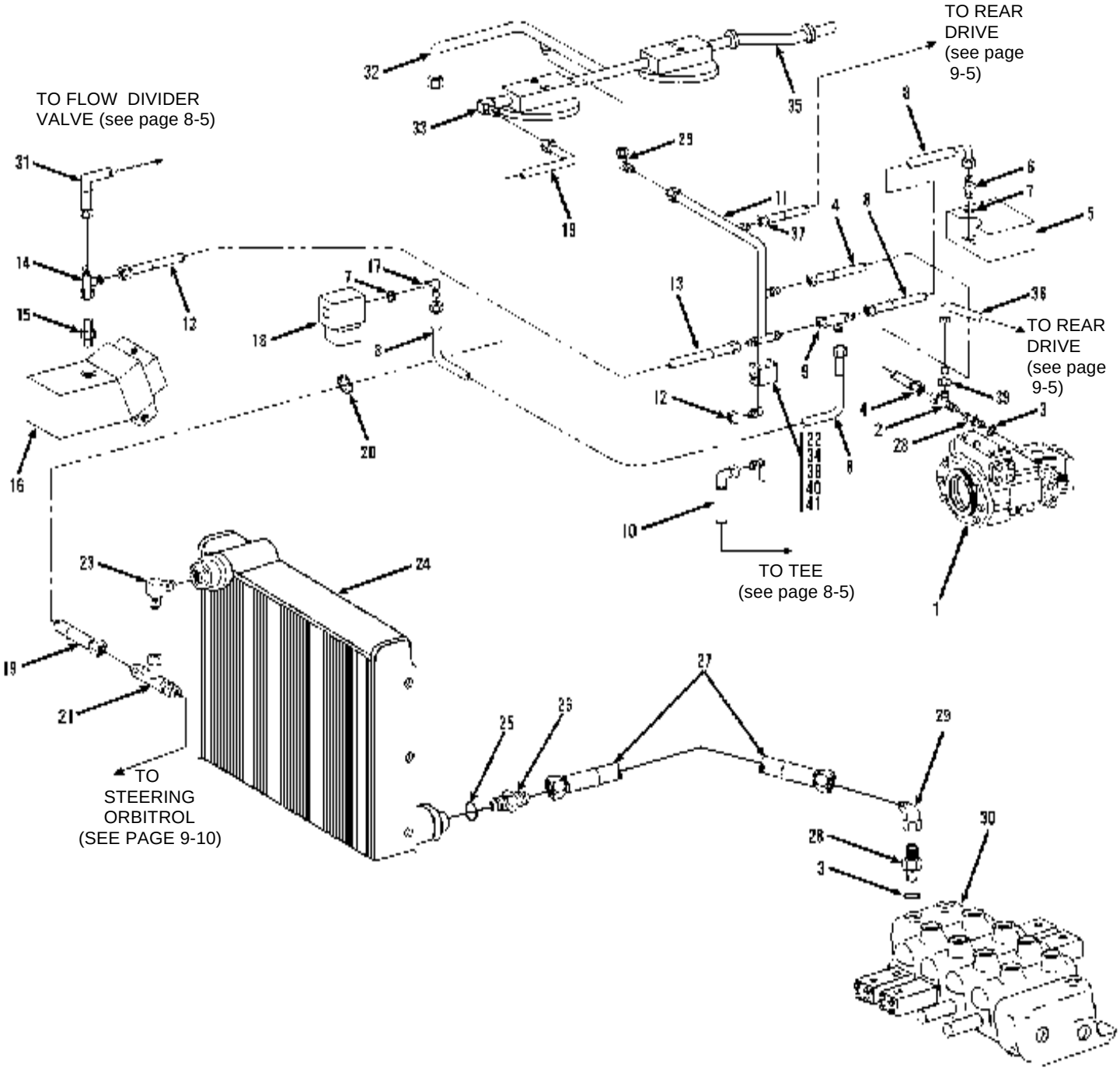

** Changed part number on item 13.*

Item	Part No.	Qty.	Description Of Part
1		Ref	HYDROSTATIC DRIVE TRANSMISSION (see page 10-18 S/N 0288568 for details)
2	8866-2242	1	SWIVEL NUT RUN TEE, 3/4 TUBE
3	8859-1207	2	O-RING (included with item 28)
4	8471-7839	1	HOSE ASSY
5		Ref	TRACTION LOCK VALVE (see page 10-25 S/N 0288568 for details)
6	8866-2005	1	CONNECTOR (includes item 7)
7	8859-1204	2	O-RING
8	8471-7930	2	HOSE ASSY
9	8866-2239	1	SWIVEL NUT RUN TEE, 3/8 TUBE
10	8471-7908	1	HOSE ASSY
11	9132-3011	1	TUBE ASSY
12	8866-1362	1	HEX CAP, 1/4 TUBE
*13	8471-8999	1	HOSE ASSY
14	8866-2239	1	SWIVEL NUT RUN TEE, 3/8 TUBE
15	9108-3426	1	STRAIGHT THREAD ADAPTER (includes o-ring)
	8859-1207	1	O-RING
16		Ref	FRONT DRIVE MOTOR (see page 10-20 for details)
17	8866-2064	1	ELBOW, 90 DEGREES (includes item 7)
18		Ref	SOLENOID VALVE, (see page 10-14 S/N 0288777 for details)
19	8471-8644	1	HOSE ASSY
20	8584-1150	1	CLAMP
	7714-3015	1	WHIZ LOCKNUT, 3/8-16
21	8692-1327	1	TEE
22	8855-1009	2	LOCKWASHER, 1/4
23	8362-3032	1	ELBOW, 90 DEGREES
24		Ref	OIL COOLER ASSY (see page 5-6 Turbo for details)
25		1	O-RING (included with item 26)
26	8325-1287	1	ADAPTER (includes item 25)
27	8471-8643	1	HOSE ASSY
28	8866-2008	2	STRAIGHT THREAD ADAPTER, (includes item 3)
29	8866-2108	2	ELBOW, 90 DEGREES (swivel nut)
30		Ref	MAIN CONTROL VALVE ASSY, (see page 10-9 S/N 0288568 for details)
31	8471-7832	1	HOSE ASSY
32	9108-3516	1	RESERVOIR RETURN TUBE
33	8362-3032	1	ELBOW, 90 DEGREES
34	8856-1017	2	FLAT WASHER, 1/4
35	9108-3519	1	45 DEGREE CONNECTOR
36	8471-8757	1	HOSE ASSY
37	8471-8756	1	HOSE ASSY
38	8820-1010	2	HEX HD CAPSCREW, 1/4-20X2-1/4, GR5
39	8365-1133	1	REDUCER
40	7713-3053	1	CLAMP SET
41	7713-3052	1	COVER PLATE

** Changed part number on item 13.*

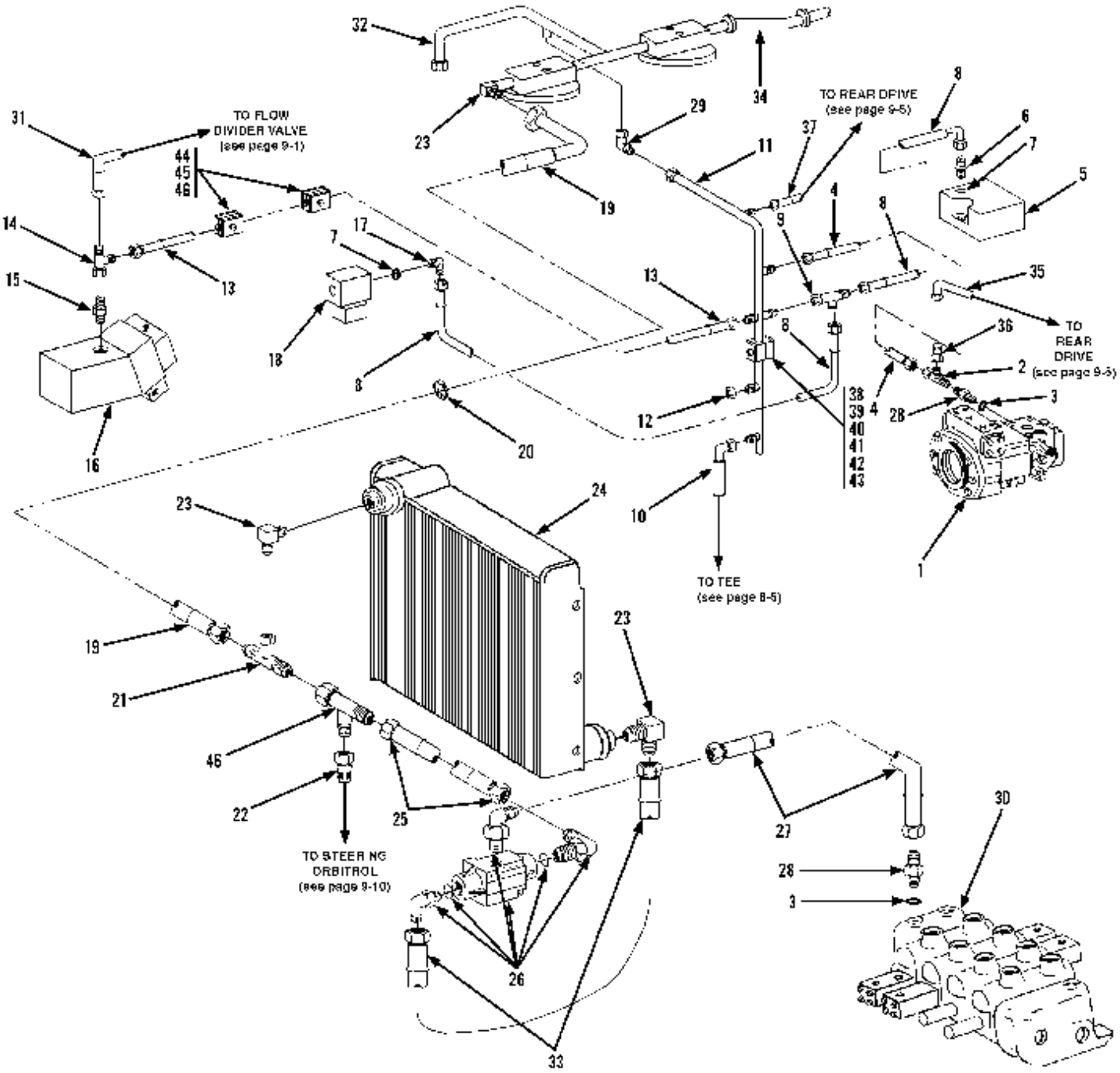
TO FLOW DIVIDER VALVE (see page 9-1)
TO REAR DRIVE (see page 9-5)
TO REAR DRIVE (see page 9-5)
TO TEE (see page 8-5)
TO STEERING ORBITROL (see page 9-10)
1
2
3
4
5
6
7
8
9
10
11
12
13
14
15
16
17
18
19
20
21
22
23
24
25
26
27
28
29
30
31
32
33
34
35
36
37
38
39
40
41
42
43
44
45
46

Item	Part No.	Qty.	Description Of Part
1		Ref	HYDROSTATIC DRIVE TRANSMISSION (see page 10-18 S/N 0388349 for details)
2	8866-2242	1	SWIVEL NUT RUN TEE, 3/4 TUBE
3	8859-1207	2	O-RING
4	8471-7839	1	HOSE ASSY
5		Ref	TRACTION LOCK VALVE (see page 10-25 S/N 0288568 for details)
6	8866-2005	1	CONNECTOR (includes item 7)
7	8859-1204	2	O-RING
8	8471-7930	2	HOSE ASSY
9	8866-2239	1	SWIVEL NUT RUN TEE, 3/8 TUBE
10	8471-7908	1	HOSE ASSY
11	9132-3011	1	TUBE ASSY
12	8866-1362	1	HEX CAP, 1/4 TUBE
13	8471-8999	1	HOSE ASSY
14	8866-2239	1	SWIVEL NUT RUN TEE, 3/8 TUBE
15	9105-3426	1	STRAIGHT THREAD ADAPTER (includes o-ring)
	8859-1207	1	O-RING
16		Ref	FRONT DRIVE MOTOR (see page 10-20 for details)
17	8866-2064	1	ELBOW, 90 DEGREES (includes item 7)
18		Ref	SOLENOID VALVE, (see page 10-14 S/N 0288777 for details)
19	8471-8644	1	HOSE ASSY
20	8584-1150	1	CLAMP (includes nut)
	7714-3015	1	WHIZ LOCKNUT, 3/8-16
21	8692-1327	1	TEE

Item	Part No.	Qty.	Description Of Part
22	9132-3007	1	REDUCER
23	8362-3032	3	ELBOW, 90 DEGREES
24		Ref	OIL COOLER ASSY (see page 5-6 Turbo for details)
25	8471-8958	1	HOSE ASSY
26		Ref	THERMAL BYPASS VALVE ASSY (see page 10-26 for details)
27	8471-8957	1	HOSE ASSY
28	8866-2027	1	CONNECTOR (includes item 3)
29	8866-2108	1	ELBOW, 90 DEGREES (swivel nut)
30		Ref	MAIN CONTROL VALVE ASSY (see page 10-9 for details)
31	8471-7832	1	HOSE ASSY
32	9108-3516	1	RESERVOIR RETURN TUBE
33	8471-8912	1	HOSE ASSY
34	9108-3519	1	45 DEGREE BEADED INSERT
35	8471-8757	1	HOSE ASSY
36	8365-1133	1	REDUCER
37	8471-8756	1	HOSE ASSY
38	7713-3053	1	CLAMP SET, 3/4 TUBE
39	7713-3052	1	COVER PLATE
40	8820-1010	2	HEX HD CAPSCREW, 1/4-20X2-1/4, GR5
41	8850-1004	2	HEX NUT, 1/4-20
42	8855-1009	2	LOCKWASHER, 1/4
43	8856-1107	2	FLAT WASHER, 1/4
44	9108-3240	2	CLAMP SET
45	7713-3140	2	COVER PLATE
46	7713-3177	2	HEX HD CAPSCREW, 5/16-18X1-3/8, GR5

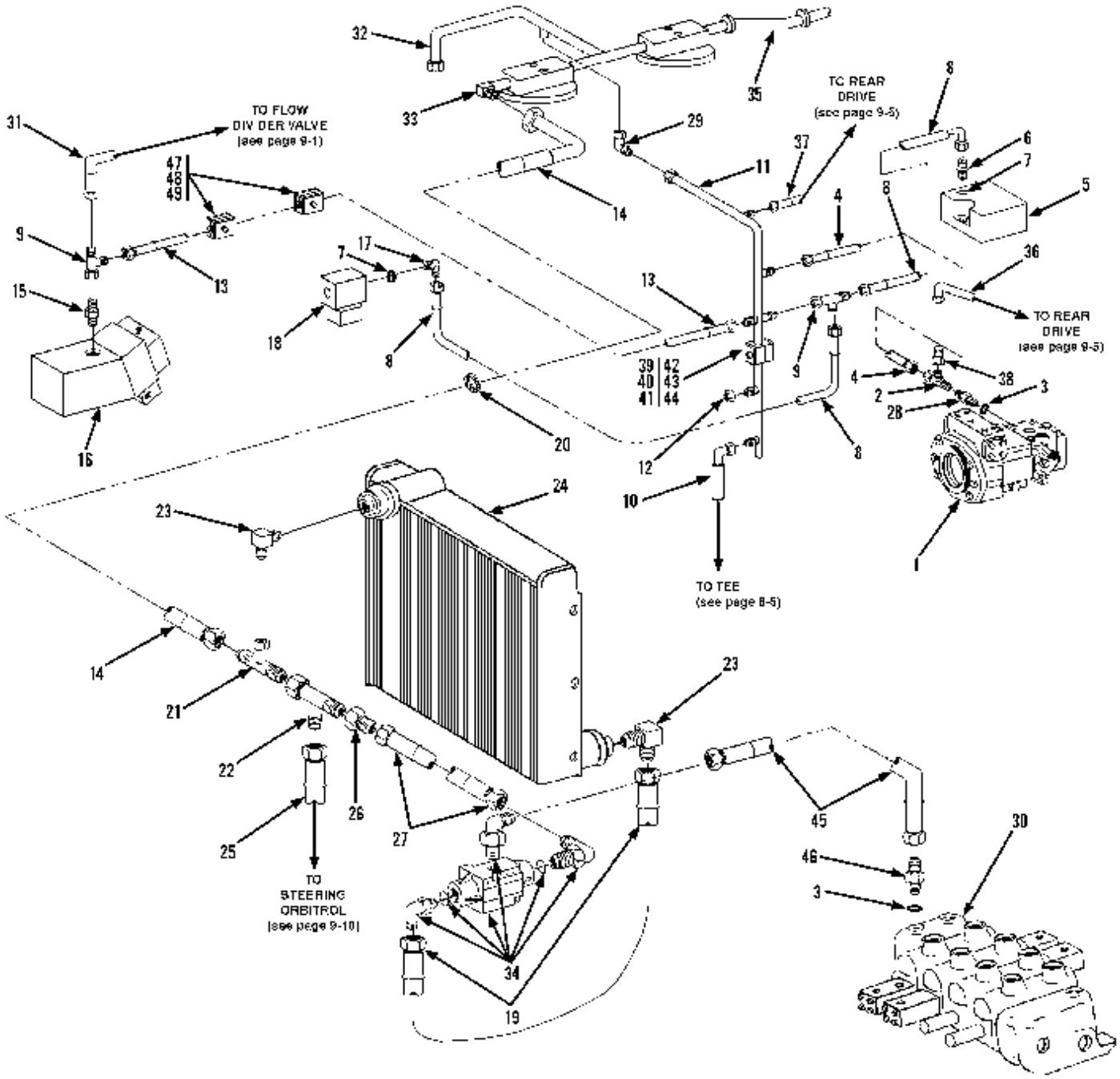
TO FLOW DIVIDER VALVE (see page 9-1)
TO REAR DRIVE (see page 9-5)
TO REAR DRIVE (see page 9-5)
TO TEE (see page 8-5)
TO STEERING ORBITROL (see page 9-10)
47 48 49
39 40 41
42 43 44

Item	Part No.	Qty.	Description Of Part
1		Ref	HYDROSTATIC DRIVE TRANSMISSION (see page 10-18 S/N 0388349 for details)
2	8866-2242	1	SWIVEL NUT RUN TEE, 3/4 TUBE
3	8859-1207	2	O-RING
4	8471-7839	1	HOSE ASSY
5		Ref	TRACTION LOCK VALVE (see page 10-25 S/N 0288568 for details)
6	8866-2005	1	CONNECTOR (includes item 7)
7	8859-1204	2	O-RING
8	8471-7930	2	HOSE ASSY
9	8866-2239	2	SWIVEL NUT RUN TEE, 3/8 TUBE
10	8471-7908	1	HOSE ASSY
11	9132-3011	1	TUBE ASSY
12	8866-1362	1	HEX CAP, 1/4 TUBE
13	8471-8999	1	HOSE ASSY
14	8471-8644	1	HOSE ASSY
15	9105-3426	1	STRAIGHT THREAD ADAPTER (includes o-ring)
	8859-1207	1	O-RING
16		Ref	FRONT DRIVE MOTOR (see page 10-20 for details)
17	8866-2064	1	ELBOW, 90 DEGREES (includes item 7)
18		Ref	SOLENOID VALVE, (see page 10-14 S/N 0288777 for details)
19	8471-8912	1	HOSE ASSY
20	8584-1150	1	CLAMP (includes nut)
	7714-3015	1	WHIZ LOCKNUT, 3/8-16
21	8692-1327	1	SWIVEL NUT RUN TEE
22	8866-2244	1	SWIVEL NUT RUN TEE, 1" TUBE

Item	Part No.	Qty.	Description Of Part
23	8362-3032	2	ELBOW, 90 DEGREES
24		Ref	OIL COOLER ASSY (see page 5-6, S/N 0488238 for details)
25	8471-7810	1	HOSE ASSY
26	9132-3007	1	REDUCER
27	8471-8958	1	HOSE ASSY
28	8866-2008	1	CONNECTOR (includes item 3)
29	8866-2108	1	ELBOW, 90 DEGREES (swivel nut)
30		Ref	MAIN CONTROL VALVE ASSY (see page 10-9 for details)
31	8471-7832	1	HOSE ASSY
32	9108-3516	1	RESERVOIR RETURN TUBE
33	8362-3032	1	ELBOW, 90 DEGREES
34		Ref	THERMAL BYPASS VALVE ASSY (see page 10-26 for details)
35	9108-3519	1	45 DEGREE BEADED INSERT
36	8471-8757	1	HOSE ASSY
37	8471-8756	1	HOSE ASSY
38	8365-1133	1	REDUCER
39	7713-3053	1	CLAMP SET
40	7713-3052	1	COVER PLATE
41	8855-1009	2	LOCKWASHER, 1/4
42	8850-1004	2	HEX NUT, 1/4-20
43	8856-1107	2	FLAT WASHER, 1/4
44	8820-1010	2	HEX HD CAPSCREW, 1/4-20X2-1/4, GR5
45	8471-8957	1	HOSE ASSY
46	8866-2027	1	CONNECTOR (includes item 3)
47	9108-3240	2	CLAMP SET
48	7713-3140	2	COVER PLATE
49	7713-3177	2	HEX HD CAPSCREW, 5/16-18X1-3/8

HYDRAULIC CIRCUITS
Dump Circuit (532C-6)
Starting Serial No. 0188002
Original Issue 1-90
Revised 2-23-98

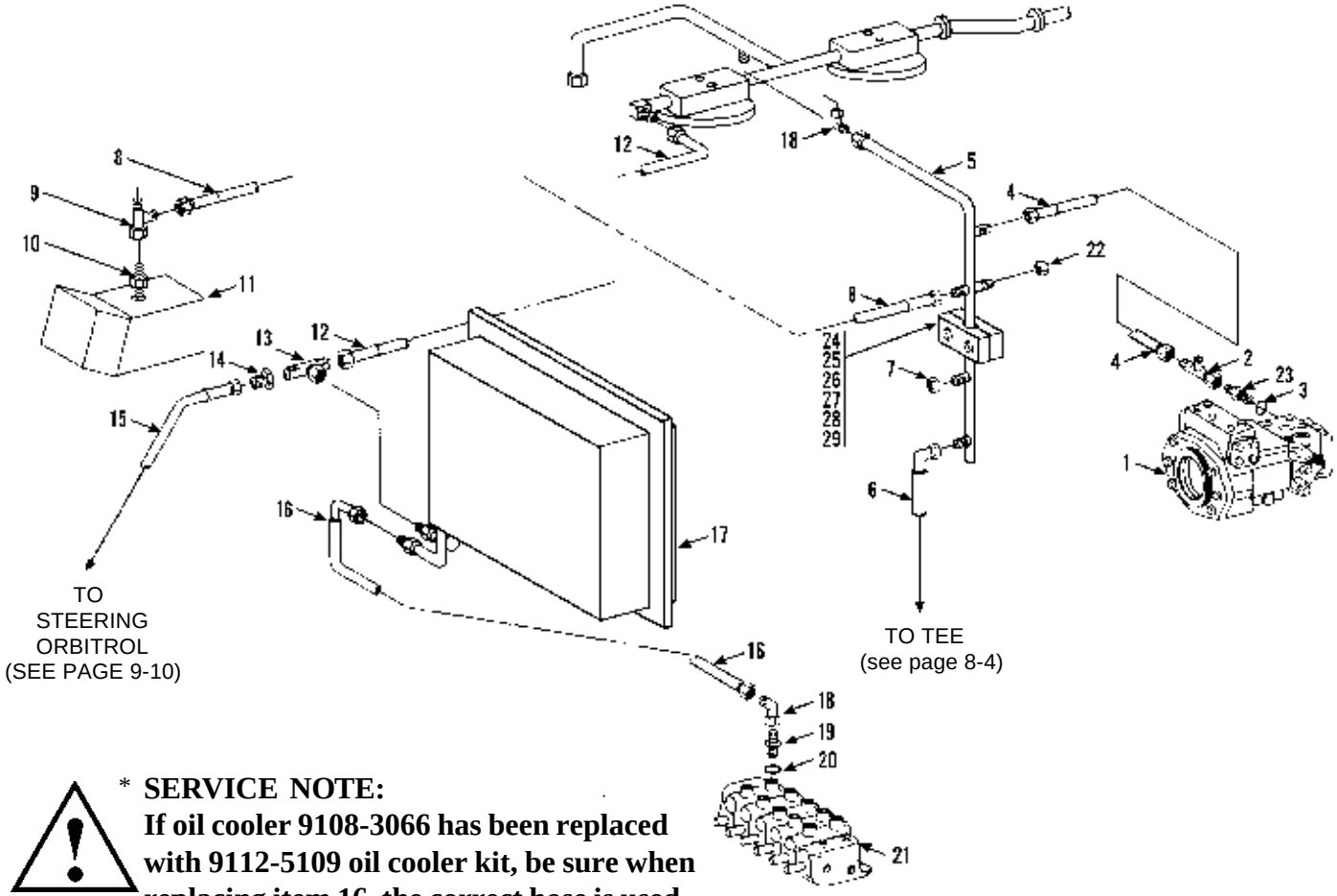

*** SERVICE NOTE:**
If oil cooler 9108-3066 has been replaced with 9112-5109 oil cooler kit, be sure when replacing item 16, the correct hose is used.

Item	Part No.	Qty.	Description Of Part
1		Ref	HYDROSTATIC DRIVE TRANSMISSION (see page 10-18 for details)
2	8866-2240	1	SWIVEL NUT RUN TEE, 1/2 TUBE
3	8859-1207	1	O-RING
4	8471-7839	1	HOSE ASSY
5	9130-3059	1	TUBE ASSY
6	8471-7908	1	HOSE ASSY
7	8866-1362	1	CAP
8	8471-8999	1	HOSE ASSY
9	8866-2239	1	SWIVEL NUT RUN TEE, 3/8 TUBE
10	9108-3306	1	STRAIGHT THREAD ADAPTER (includes o-ring)
	8859-1206	1	O-RING
11		Ref	FRONT DRIVE MOTOR ASSY (see page 10-19 for details)
12	8471-7872	1	HOSE ASSY
13	8866-2227	1	SWIVEL NUT BRANCH TEE, 3/4 TUBE
14	8866-1345	1	REDUCER
	8866-1408	1	NUT, 3/4 TUBE

Item	Part No.	Qty.	Description Of Part
15	8471-7810	1	HOSE ASSY
*16	8471-7906	1	HOSE ASSY (use with 9108-3066)
	8471-9110	1	HOSE ASSY (use with oil cooler kit, 9112-5109)
17		Ref	OIL COOLER ASSY (see page 5-6 for details)
18	8866-2108	2	ELBOW, 90 DEGREES (swivel nut)
19	8866-2008	1	CONNECTOR (includes item 20)
20	8859-1207	1	O-RING
21		Ref	MAIN CONTROL VALVE (see page 10-9 for details)
22	8866-1364	1	HEX CAP, 3/8 TUBE
23	8866-2008	1	CONNECTOR (includes item 3)
24	7713-3053	1	CLAMP SET, 3/4 TUBE
25	7713-3052	1	COVER PLATE
26	8820-1010	2	HEX HD CAPSCREW, 1/4-20X2-1/4, GR5
27	8850-1004	2	HEX NUT, 1/4-20
28	8855-1009	2	LOCKWASHER, 1/4
29	8856-1107	2	FLAT WASHER, 1/4

** Added service note and additional hose to item 16.*

HYDRAULIC CIRCUITS
Dump Circuit (532C-6)
Starting Serial No. 0388349
Original Issue 6-96
Revised 2-5-98

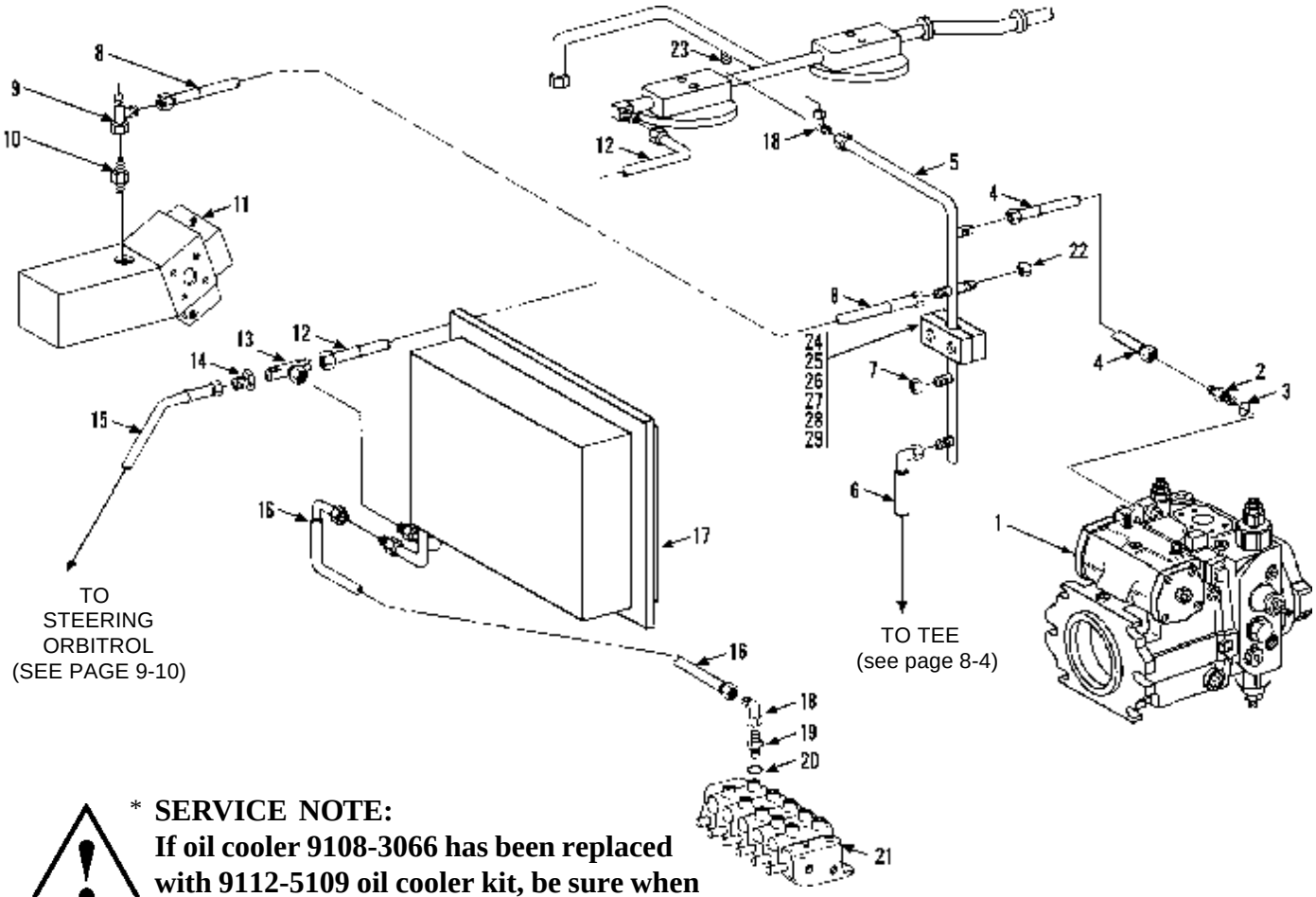

*** SERVICE NOTE:**
If oil cooler 9108-3066 has been replaced with 9112-5109 oil cooler kit, be sure when replacing item 16, the correct hose is used.

Item	Part No.	Qty.	Description Of Part
1		Ref	HYDROSTATIC DRIVE TRANSMISSION (see page 10-18 for details)
2	8866-2008	1	CONNECTOR (includes item 3)
3	8859-1207	1	O-RING
4	8471-7839	1	HOSE ASSY
5	9130-3059	1	TUBE ASSY
6	8471-7908	1	HOSE ASSY
7	8866-1362	1	CAP
8	8471-8999	1	HOSE ASSY
9	8866-2239	1	SWIVEL NUT RUN TEE, 3/8 TUBE
10	9105-3426	1	STRAIGHT THREAD ADAPTER (includes o-ring)
	8859-1207	1	O-RING
11		Ref	FRONT DRIVE MOTOR ASSY (see page 10-19 for details)
12	8471-7872	1	HOSE ASSY
13	8866-2227	1	SWIVEL NUT BRANCH TEE, 3/4 TUBE
14	8866-1345	1	REDUCER (includes nut)
	8866-1408	1	NUT, 3/4 TUBE

Item	Part No.	Qty.	Description Of Part
15	8471-7810	1	HOSE ASSY
* 16	8471-7906	1	HOSE ASSY (use with 9108-3066)
	8471-9110	1	HOSE ASSY (use with oil cooler kit, 9112-5109)
17		Ref	OIL COOLER ASSY (see page 5-6 for details)
18	8866-2108	2	ELBOW, 90 DEGREES (swivel nut)
19	8866-2008	1	CONNECTOR (includes item 20)
20	8859-1207	1	O-RING
21		Ref	MAIN CONTROL VALVE (see page 10-9 for details)
22	8866-1364	1	HEX CAP, 3/8 TUBE
23	8866-1010	1	MALE CONNECTOR, 3/8X1/2 TUBE
24	7713-3053	1	CLAMP SET, 3/4 TUBE
25	7713-3052	1	COVER PLATE
26	8820-1010	2	HEX HD CAPSCREW, 1/4-20X2-1/4, GR5
27	8850-1004	2	HEX NUT, 1/4-20
28	8855-1009	2	LOCKWASHER, 1/4
29	8856-1107	2	FLAT WASHER, 1/4

** Added service note and additional hose to item 16.*

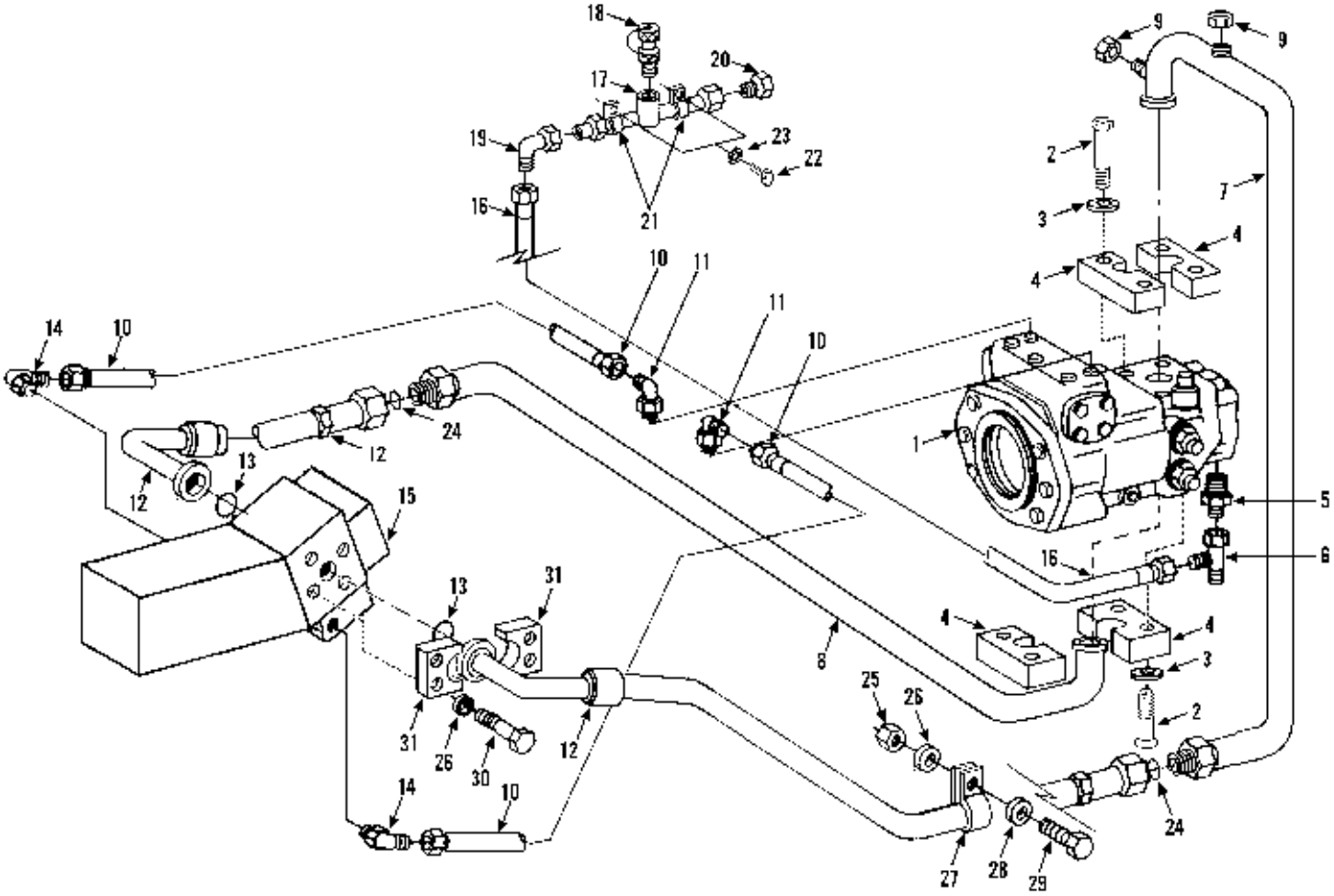

Item	Part No.	Qty.	Description Of Part
1		Ref	HYDROSTATIC TRANSMISSION ASSY (see page 10-18 for details)
2	8320-1135	8	HEX HD CAPSCREW, 7/16-14X1-1/2, GR8
3	8855-1012	8	LOCKWASHER, 7/16
4	8471-2738	4	FLANGE HALF
5	9108-3426	1	CONNECTOR
6	8866-2239	1	SWIVEL NUT RUN TEE, 3/8 TUBE
7	9108-3104	1	TUBE ASSY
8	9109-3001	1	TUBE ASSY
9	8471-4006	2	CAP
10	8471-7913	2	HOSE ASSY
11	8866-2062	2	ELBOW, 90 DEGREES (includes o-ring)
	8859-1202	2	O-RING
12	8471-7897	2	HOSE ASSY
13	9108-3339	2	O-RING
14	8866-2062	2	ELBOW, 90 DEGREES (includes o-ring)
	8859-1202	2	O-RING
15		Ref	FRONT DRIVE MOTOR, (see page 10-19 for details)

Item	Part No.	Qty.	Description Of Part
16	8471-7830	1	HOSE ASSY
17	9104-3163	1	TUBE ASSY
18	7713-3089	1	TEXT COUPLING
19	8866-2105	1	ELBOW, 90 DEGREES (swivel nut)
20	8866-1384	2	HEX CAP, 3/8 TUBE
21	2486-1170	2	TUBE CLIP
22	8820-1003	2	HEX HD CAPSCREW, 1/4-20X3/4, GR5
23	8855-1009	2	LOCKWASHER, 1/4
24	8859-1509	2	O-RING
25	8850-1008	2	HEX NUT, 1/2-13
*26	8855-1013	10	LOCKWASHER, 1/2
27	9002-8660	2	SUPPORT CLAMP
28	8856-1111	2	FLAT WASHER, 1/2
29	8820-1066	2	HEX HD CAPSCREW, 1/2-13X1-1/4, GR5
*30	8320-1120	8	HEX HD CAPSCREW 1/2-13X1-3/4, GR5
*31	8471-2739	4	FLANGE HALF

** Changed quantity on item 26, added items 30 & 31. Changed logo in upper left corner to designate model more clearly.*

HYDRAULIC CIRCUITS
Drive Circuit (532C-6)
Starting Serial No. 0188256
Original Issue 10-95

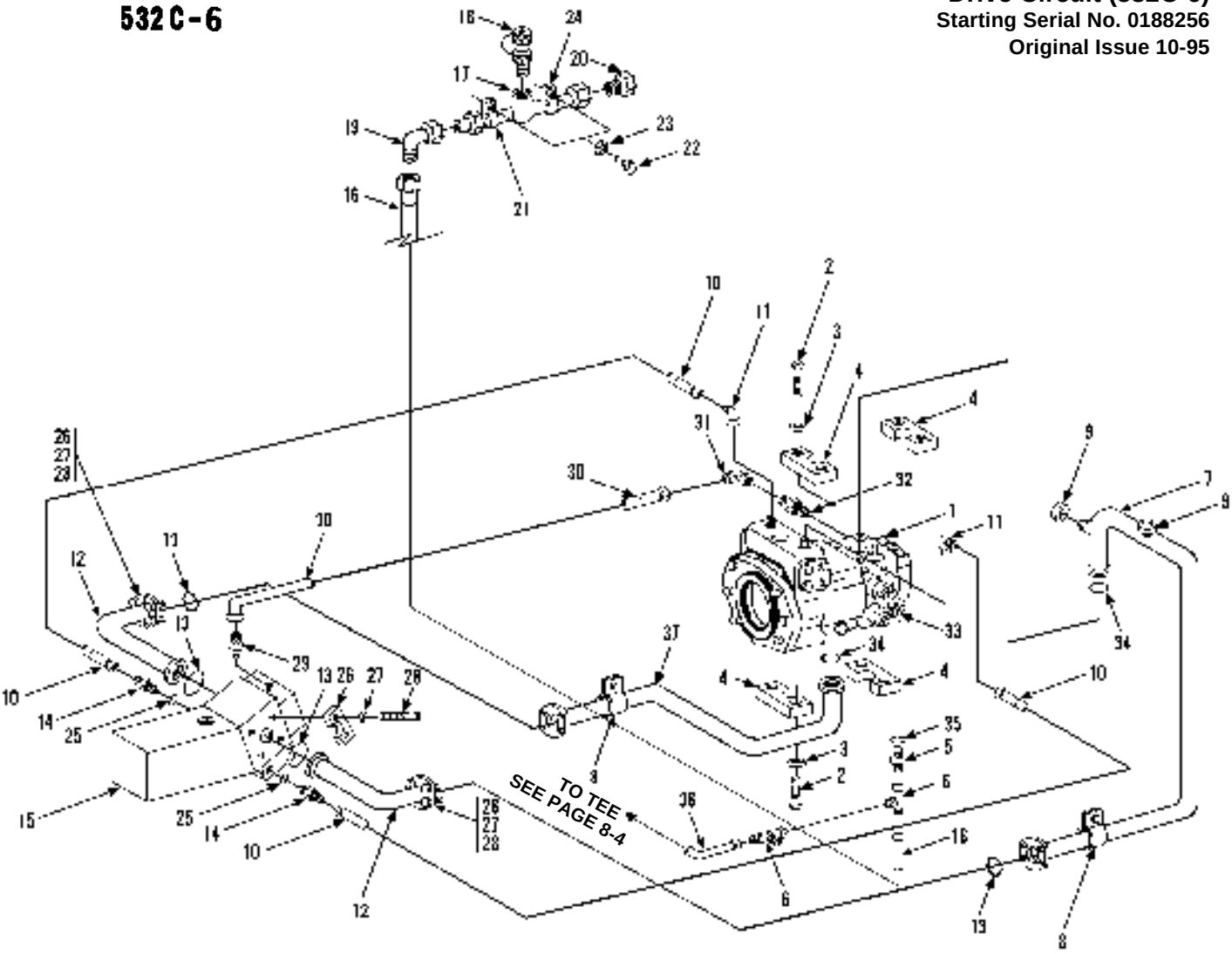

Item	Part No.	Qty.	Description Of Part
1		Ref	HYDROSTATIC TRANSMISSION ASSY (see page 10-18 for details)
2	8320-1135	8	HEX HD CAPSCREW, 7/16-14X1-1/2, GR8
3	8855-1012	8	LOCKWASHER, 7/16
4	8471-2738	4	FLANGE HALF
5	9105-3426	1	CONNECTOR (includes item 35)
6	8866-2239	2	SWIVEL NUT RUN TEE, 3/8 TUBE
7	9108-3419	1	TUBE ASSY
8	9020-5792	2	CUSHION CLAMP
9	8471-4006	2	CAP
10	8471-7913	2	HOSE ASSY
11	8866-2062	2	ELBOW, 90 DEGREES (includes o-ring)
	8859-1202	2	O-RING
12	8471-8474	2	HOSE ASSY
13	9108-3339	4	O-RING
14	8866-2003	2	CONNECTOR (includes item 25)
15		Ref	FRONT DRIVE MOTOR, (see page 10-19 for details)
16	8471-7830	1	HOSE ASSY
17	9104-3163	1	TUBE ASSY

Item	Part No.	Qty.	Description Of Part
18	7713-3089	1	TEST COUPLING
19	8866-2105	1	ELBOW, 90 DEGREES (swivel nut)
20	8866-1384	2	HEX CAP, 3/8 TUBE
21	2486-1170	2	TUBE CLIP
22	8820-1003	2	HEX HD CAPSCREW, 1/4-20X3/4, GR5
23	8855-1009	2	LOCKWASHER, 1/4
24	8662-1230	1	TUBE CLIP
25	8859-1202	2	O-RING
26	8471-2739	8	FLANGE HALF
27	8856-1013	16	LOCKWASHER, 1/2
28	8320-1120	16	HEX HD CAPSCREW, 1/2-13X1-3/4, GR5
29	9108-3342	1	STRAIGHT THREAD CONNECTOR
30	8471-7983	1	HOSE ASSY
31	8866-2119	1	ELBOW, 45 DEGREES (swivel nut)
32	8866-2018	1	CONNECTOR (includes o-ring)
	8859-1205	1	O-RING
33	9108-3475	2	STAUFF TEST COUPLING
34	9108-3106	2	O-RING
35	8859-1207	1	O-RING
36	8471-7852	1	HOSE ASSY
37	9108-3095	1	TUBE ASSY

HYDRAULIC CIRCUITS
Drive Circuit (532C-6)
Starting Serial No. 0388247
Original Issue 3-96

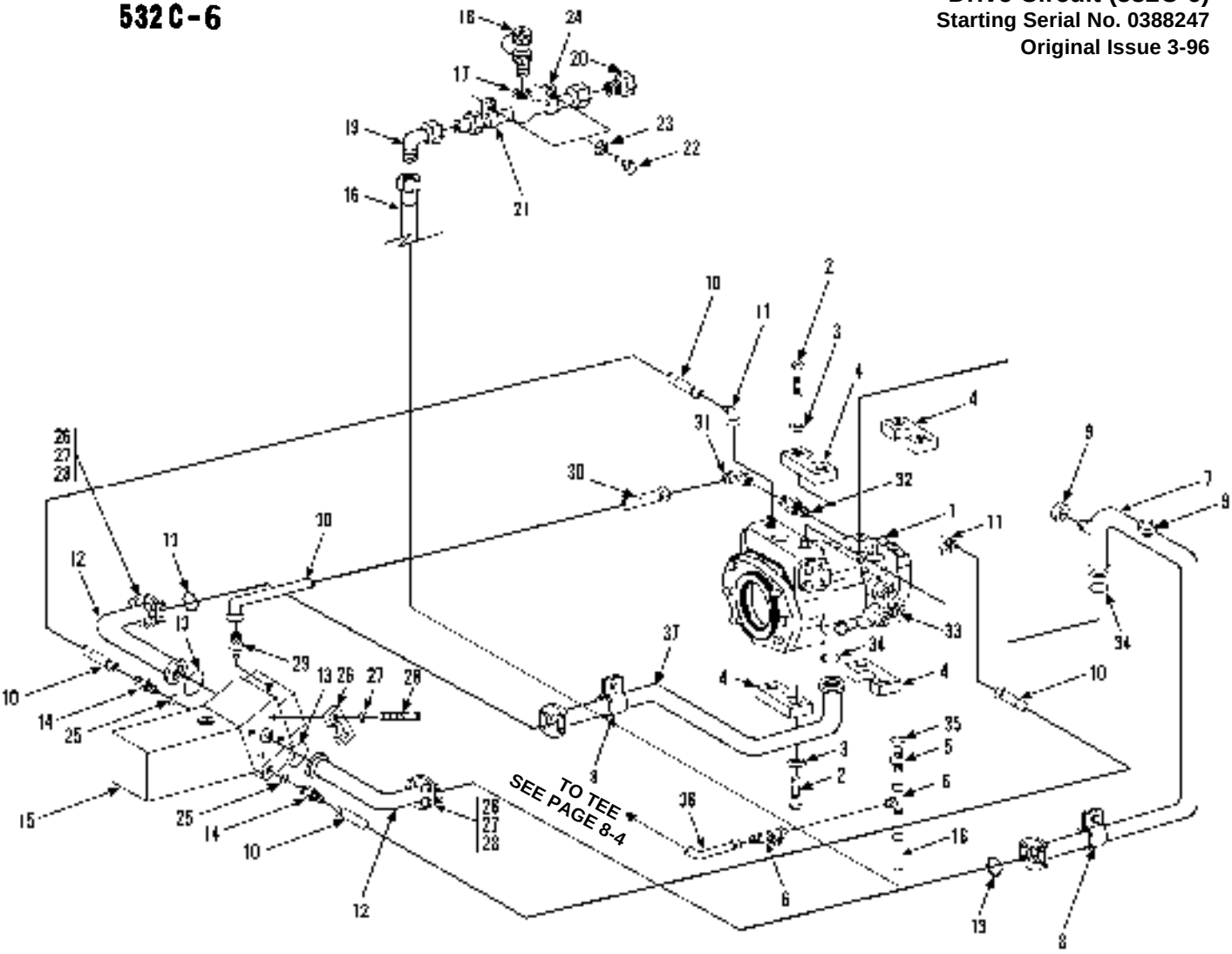

Item	Part No.	Qty.	Description Of Part
1		Ref	HYDROSTATIC TRANSMISSION ASSY (see page 10-18 for details)
2	8320-1135	8	HEX HD CAPSCREW, 7/16-14X1-1/2, GR8
3	8855-1012	8	LOCKWASHER, 7/16
4	8471-2738	4	FLANGE HALF
5	9105-3426	1	CONNECTOR (includes item 35)
6	8866-2239	2	SWIVEL NUT RUN TEE, 3/8 TUBE
7	9108-3419	1	TUBE ASSY
8	9020-5792	2	CUSHION CLAMP
9	8471-4006	2	CAP
10	8471-7913	2	HOSE ASSY
11	8866-2062	2	ELBOW, 90 DEGREES (includes o-ring)
	8859-1202	2	O-RING
12	8471-8527	2	HOSE ASSY
13	9108-3339	4	O-RING
14	8866-2003	2	CONNECTOR (includes item 25)
15		Ref	FRONT DRIVE MOTOR, (see page 10-19 for details)
16	8471-7830	1	HOSE ASSY
17	9104-3163	1	TUBE ASSY

Item	Part No.	Qty.	Description Of Part
18	7713-3089	1	TEST COUPLING
19	8866-2105	1	ELBOW, 90 DEGREES (swivel nut)
20	8866-1384	2	HEX CAP, 3/8 TUBE
21	2486-1170	2	TUBE CLIP
22	8820-1003	2	HEX HD CAPSCREW, 1/4-20X3/4, GR5
23	8855-1009	2	LOCKWASHER, 1/4
24	8662-1230	1	TUBE CLIP
25	8859-1202	2	O-RING
26	8471-2739	8	FLANGE HALF
27	8856-1013	16	LOCKWASHER, 1/2
28	8320-1120	16	HEX HD CAPSCREW, 1/2-13X1-3/4, GR5
29	9108-3342	1	STRAIGHT THREAD CONNECTOR
30	8471-7983	1	HOSE ASSY
31	8866-2119	1	ELBOW, 45 DEGREES (swivel nut)
32	8866-2018	1	CONNECTOR (includes o-ring)
	8859-1205	1	O-RING
33	9105-3020	2	STAUFF TEST COUPLING
34	9108-3106	2	O-RING
35	8859-1207	1	O-RING
36	8471-7852	1	HOSE ASSY
37	9108-3095	1	TUBE ASSY

HYDRAULIC CIRCUITS
Drive Circuit (532C-6)
Starting Serial No. 0388349
Original Issue 6-96

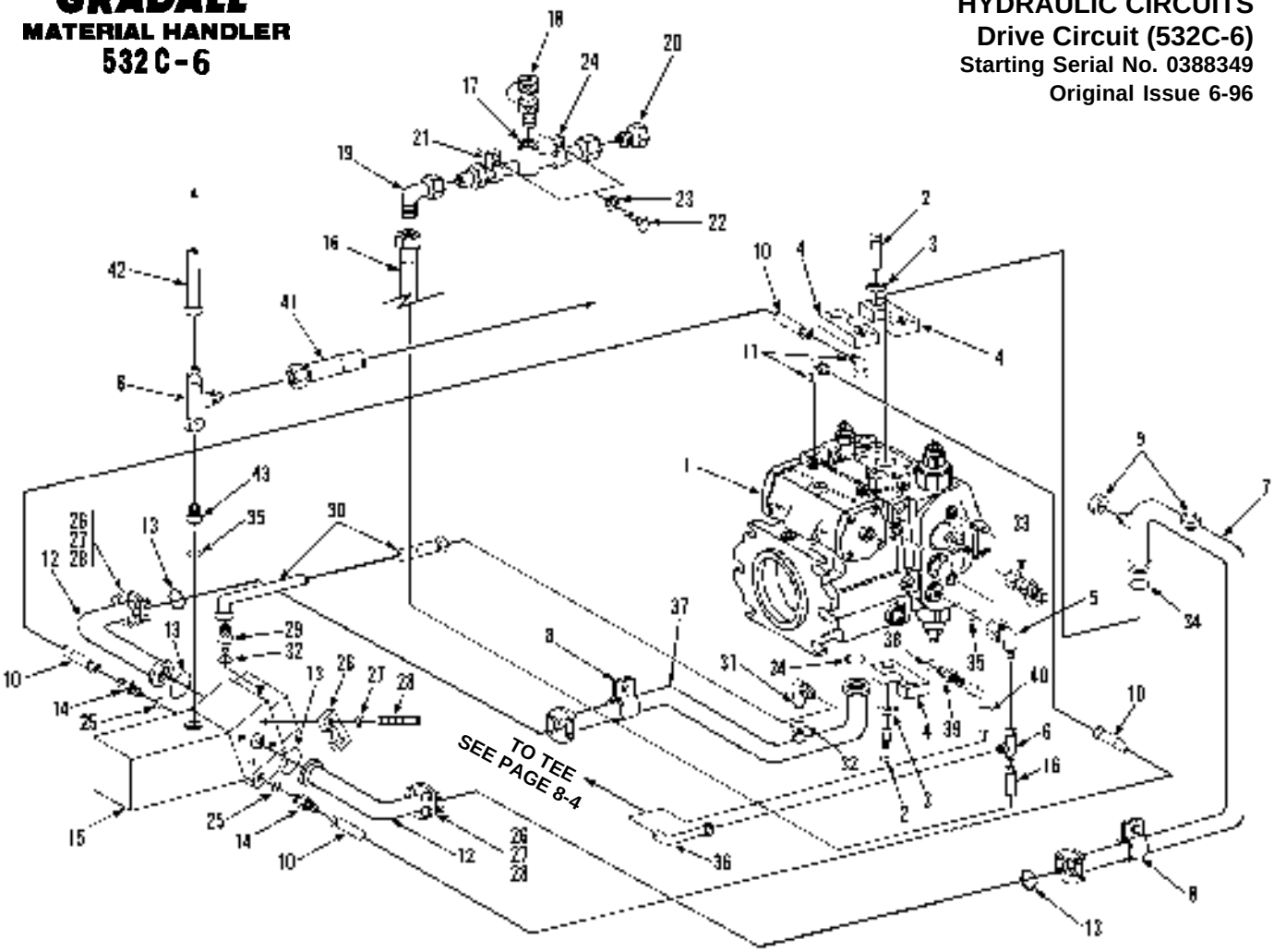

Item	Part No.	Qty.	Description Of Part
1		Ref	HYDROSTATIC TRANSMISSION ASSY (see page 10-18 for details)
2	8320-1135	8	HEX HD CAPSCREW, 7/16-14X1-1/2, GR8
3	8855-1012	8	LOCKWASHER, 7/16
4	8471-2738	4	FLANGE HALF
5	9108-3222	1	CONNECTOR (includes item 35)
6	8866-2239	2	SWIVEL NUT RUN TEE, 3/8 TUBE
7	9114-3055	1	TUBE ASSY
8	9020-5792	2	CUSHION CLAMP
9	8471-4006	2	CAP
10	8471-8854	2	HOSE ASSY
11	9002-7906	2	ELBOW, 90 DEGREES (includes o-ring)
	8859-1204	2	O-RING
12	8471-8658	2	HOSE ASSY
13	9108-3339	4	O-RING
14	8866-2003	2	CONNECTOR (includes item 25)
15		Ref	FRONT DRIVE MOTOR, (see page 10-19 for details)
16	8471-7830	1	HOSE ASSY
17	9104-3163	1	TUBE ASSY
18	7713-3089	1	TEST COUPLING
19	8866-2105	1	ELBOW, 90 DEGREES (swivel nut)
20	8866-1384	2	HEX CAP, 3/8 TUBE
21	2486-1170	2	TUBE CLIP

Item	Part No.	Qty.	Description Of Part
22	8820-1003	2	HEX HD CAPSCREW, 1/4-20X3/4, GR5
23	8855-1009	2	LOCKWASHER, 1/4
24	8662-1230	1	TUBE CLIP
25	8859-1202	2	O-RING
26	8471-2739	8	FLANGE HALF
27	8856-1013	16	LOCKWASHER, 1/2
28	8320-1120	16	HEX HD CAPSCREW, 1/2-13X1-3/4, GR5
29	8866-2017	1	STRAIGHT THREAD CONNECTOR (includes item 32)
30	8471-8931	1	HOSE ASSY
31	8866-2064	1	ELBOW, 90 DEGREES (includes item 32)
32	8859-1204	1	O-RING
33	9105-3020	2	STAUFF TEST COUPLING
34	9108-3106	2	O-RING
35	8859-1207	1	O-RING
36	8471-7852	1	HOSE ASSY
37	9109-3017	1	TUBE ASSY
38	8859-1205	1	O-RING
39	8866-2018	1	CONNECTOR (includes item 38)
40	8471-7341	1	HOSE ASSY
41	8471-7911	1	HOSE ASSY
42	8471-7832	1	HOSE ASSY
43	9105-3426	1	STRAIGHT THREAD ADAPTER (includes item 35)

HYDRAULIC CIRCUITS
(534C-6) Drive Circuit - Front
Starting Serial No. 0188002
Original Issue 1-90
Revised 10-16-95

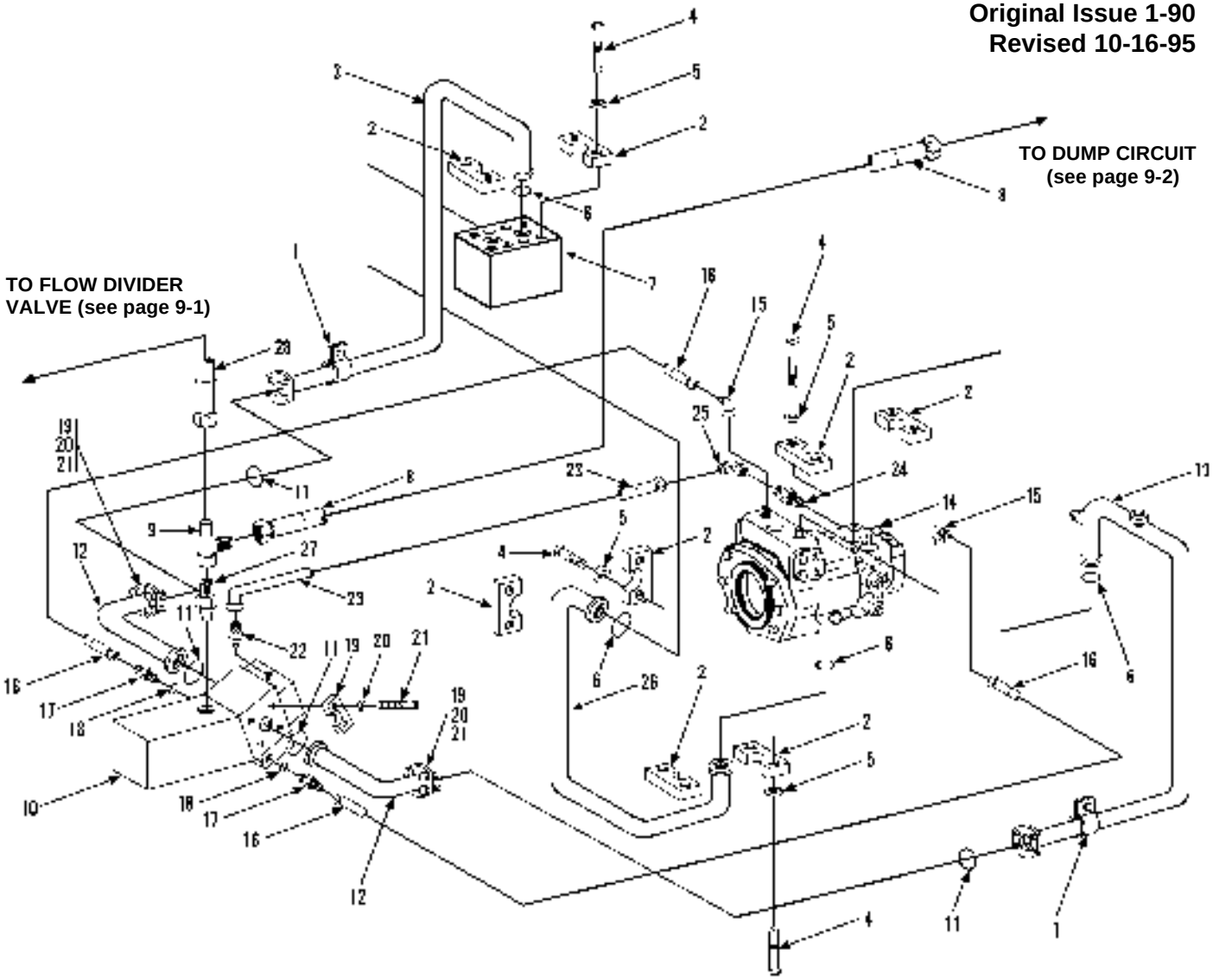

Item	Part No.	Qty.	Description Of Part
1	9020-5792	2	CUSHION CLAMP
* 2	8471-2738	8	SPLIT FLANGE CLAMP
3	9108-3418	1	TUBE ASSY
* 4	8320-1135	16	HEX HD CAPSCREW, 7/16-14X1-1/2, GR8
* 5	8855-1012	16	LOCKWASHER, 7/16
6	9108-3106	3	O-RING
7		Ref	TRACTION LOCK VALVE (see page 10-25 for details)
8	8471-7911	1	HOSE ASSY
9	8866-2239	1	SWIVEL NUT RUN TEE, 3/8 TUBE
10		Ref	FRONT DRIVE MOTOR (see page 10-20 for details)
*11	9108-3339	4	O-RING
12	8471-7897	2	HOSE ASSY
13	9108-3419	1	TUBE ASSY
14		Ref	HYDROSTATIC TRANSMISSION PUMP (see page 10-18 for details)

Item	Part No.	Qty.	Description Of Part
15	8866-2062	2	ELBOW, 90 DEGREES (includes o-ring)
	8859-1202	2	O-RING
16	8471-7913	2	HOSE ASSY
17	8866-2003	2	CONNECTOR (includes item 18)
18	8859-1202	2	O-RING
*19	8471-2739	8	SPLIT FLANGE CLAMP
*20	8856-1013	16	LOCKWASHER, 1/2
*21	8320-1120	16	HEX HD CAPSCREW, 1/2-13X1-3/4, GR5
22	9108-3342	1	STRAIGHT THREAD CONNECTOR
23	8471-7983	1	HOSE ASSY
24	8866-2018	1	CONNECTOR (includes o-ring)
	8859-1205	1	O-RING
25	8866-2119	1	ELBOW, 45 DEGREES (swivel nut)
26	9108-3095	1	TUBE ASSY
27	9108-3306	1	STRAIGHT THREAD ADAPTER
28	8471-7832	1	HOSE ASSY

** Changed upper left to designate model more clearly. Changed quantity on items 2, 4, 5, 11, 19, 20 & 21.*

HYDRAULIC CIRCUITS
(534C-6) Drive Circuit - Front
Starting Serial No. 0188251
Original Issue 7-93
Revised 10-16-95

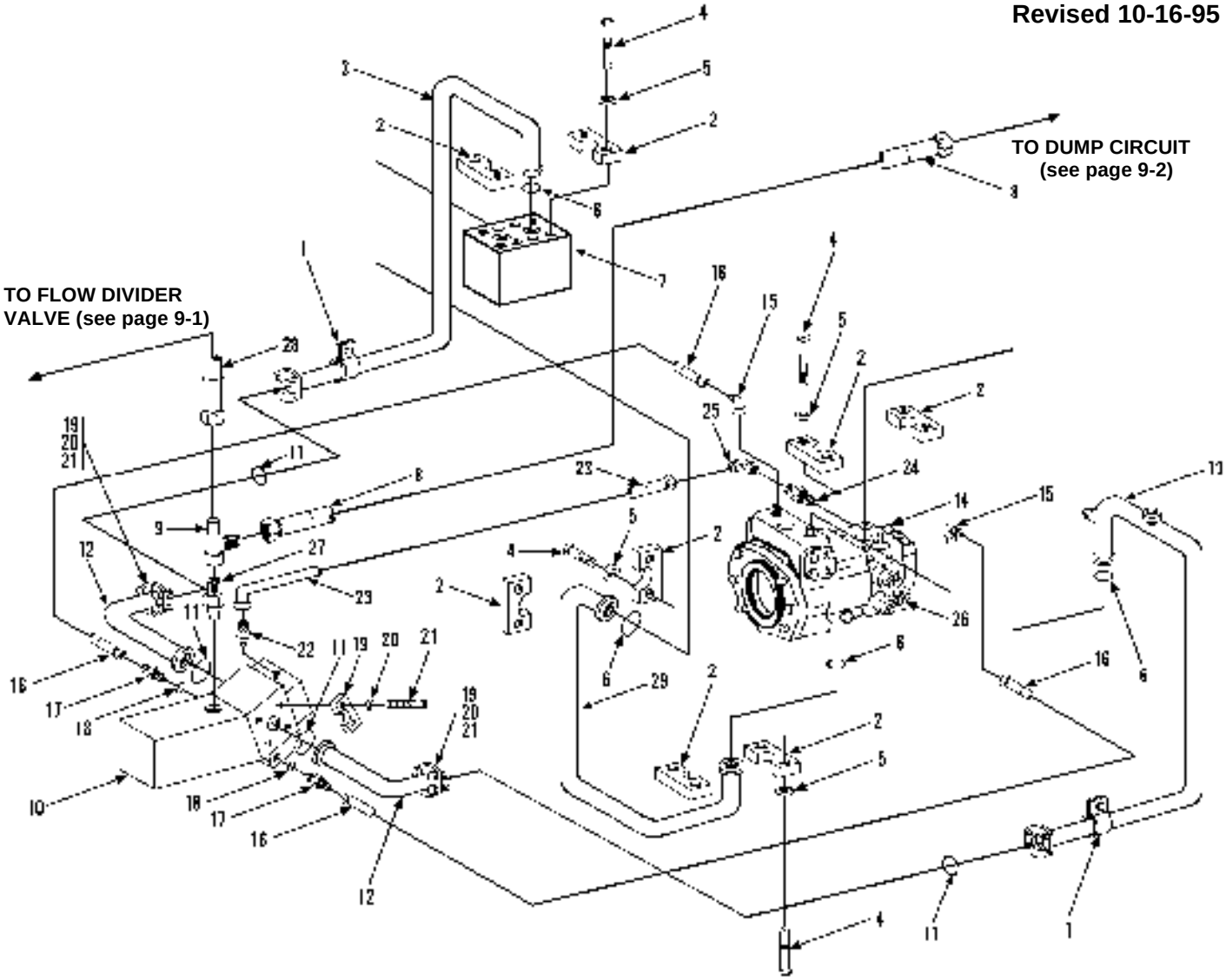

Item	Part No.	Qty.	Description Of Part
1	9020-5792	2	CUSHION CLAMP
* 2	8471-2738	8	SPLIT FLANGE CLAMP
3	9108-3418	1	TUBE ASSY
* 4	8320-1135	16	HEX HD CAPSCREW, 7/16-14X1-1/2, GR8
* 5	8855-1012	16	LOCKWASHER, 7/16
6	9108-3106	3	O-RING
7		Ref	TRACTION LOCK VALVE (see page 10-25 for details)
8	8471-7911	1	HOSE ASSY
9	8866-2239	1	SWIVEL NUT RUN TEE, 3/8 TUBE
10		Ref	FRONT DRIVE MOTOR (see page 10-20 for details)
*11	9108-3339	4	O-RING
12	8471-8474	2	HOSE ASSY
13	9108-3419	1	TUBE ASSY
14		Ref	HYDROSTATIC TRANSMISSION PUMP (see page 10-18 for details)

Item	Part No.	Qty.	Description Of Part
15	8866-2062	2	ELBOW, 90 DEGREES (includes o-ring)
	8859-1202	2	O-RING
16	8471-7913	2	HOSE ASSY
17	8866-2003	2	CONNECTOR (includes item 18)
18	8859-1202	2	O-RING
*19	8471-2739	8	SPLIT FLANGE CLAMP
*20	8856-1013	16	LOCKWASHER, 1/2
*21	8320-1120	16	HEX HD CAPSCREW, 1/2-13X1-3/4, GR5
22	9108-3342	1	STRAIGHT THREAD CONNECTOR
23	8471-7983	1	HOSE ASSY
24	8866-2018	1	CONNECTOR (includes o-ring)
	8859-1205	1	O-RING
25	8866-2119	1	ELBOW, 45 DEGREES (swivel nut)
26	9108-3475	2	TEST COUPLING
27	9108-3306	1	STRAIGHT THREAD ADAPTER
28	8471-7832	1	HOSE ASSY
29	9108-3095	1	TUBE ASSY

 ** Changed upper left to designate model more clearly. Changed quantity on items 2, 4, 5, 11, 19, 20 & 21.*

HYDRAULIC CIRCUITS
(534C-6) Drive Circuit - Front
Starting Serial No. 0388247
Original Issue 3-96

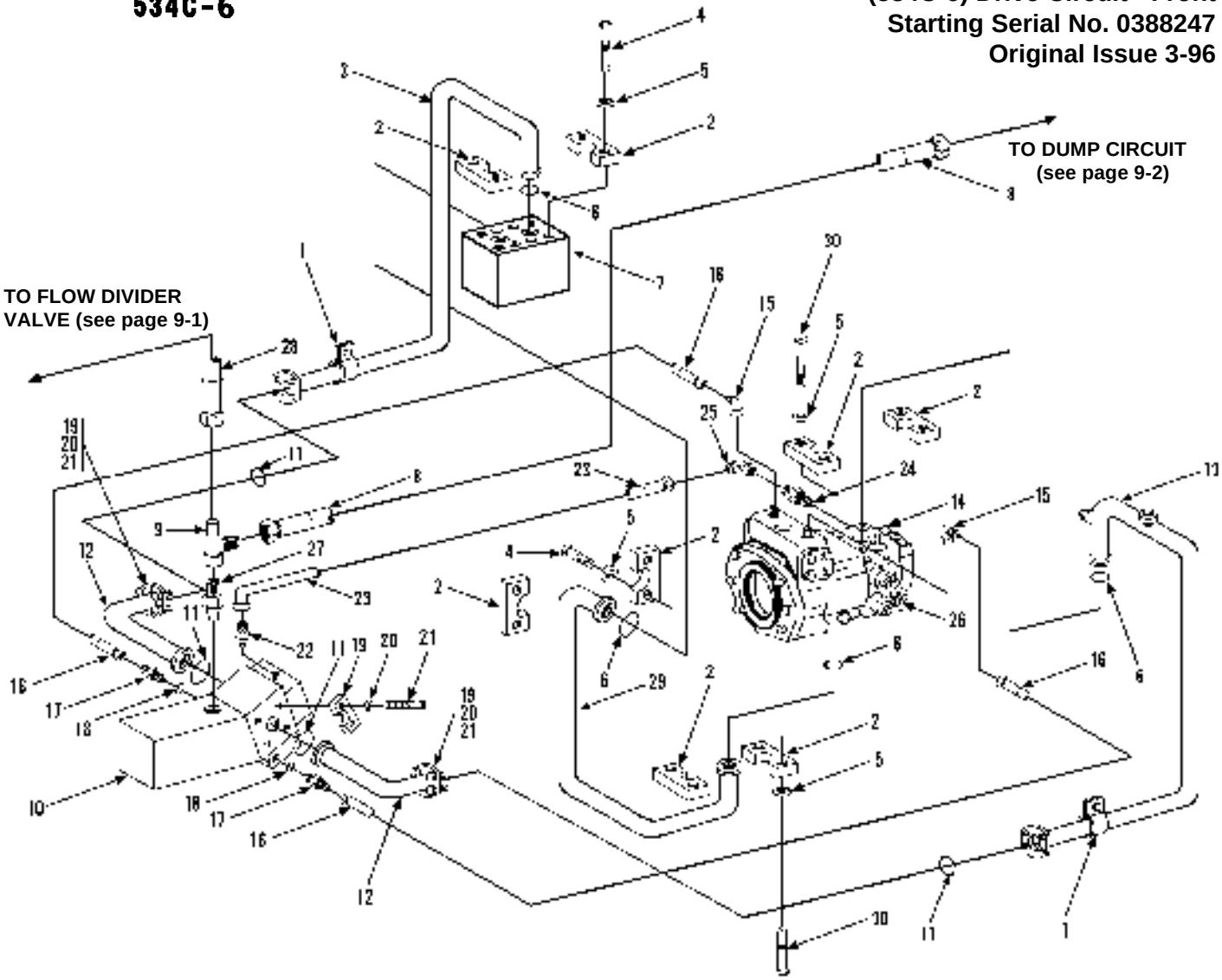

Item	Part No.	Qty.	Description Of Part
1	9020-5792	2	CUSHION CLAMP
2	8471-2738	8	SPLIT FLANGE CLAMP
3	9108-3418	1	TUBE ASSY
4	8320-1155	8	HEX HD CAPSCREW, 7/16-14X1-3/4, GR8
5	8855-1012	16	LOCKWASHER, 7/16
6	9108-3106	3	O-RING
7		Ref	TRACTION LOCK VALVE (see page 10-25 for details)
8	8471-7911	1	HOSE ASSY
9	8866-2239	1	SWIVEL NUT RUN TEE, 3/8 TUBE
10		Ref	FRONT DRIVE MOTOR (see page 10-20 for details)
11	9108-3339	4	O-RING
12	8471-8527	2	HOSE ASSY
13	9108-3419	1	TUBE ASSY
14		Ref	HYDROSTATIC TRANSMISSION PUMP (see page 10-18 for details)
15	8866-2062	2	ELBOW, 90 DEGREES (includes o-ring)
	8859-1202	2	O-RING

Item	Part No.	Qty.	Description Of Part
16	8471-7913	2	HOSE ASSY
17	8866-2003	2	CONNECTOR (includes item 18)
18	8859-1202	2	O-RING
19	8471-2739	8	SPLIT FLANGE CLAMP
20	8856-1013	16	LOCKWASHER, 1/2
21	8320-1120	16	HEX HD CAPSCREW, 1/2-13X1-3/4, GR5
22	9108-3342	1	STRAIGHT THREAD CONNECTOR
23	8471-7983	1	HOSE ASSY
24	8866-2018	1	CONNECTOR (includes o-ring)
	8859-1205	1	O-RING
25	8866-2119	1	ELBOW, 45 DEGREES (swivel nut)
26	9105-3020	2	TEST COUPLING
27	9108-3306	1	STRAIGHT THREAD ADAPTER
28	8471-7832	1	HOSE ASSY
29	9108-3095	1	TUBE ASSY
30	8320-1135	8	HEX HD CAPSCREW, 7/16-14X1-1/2, GR8

HYDRAULIC CIRCUITS
(534C-6) Drive Circuit - Front
Starting Serial No. 0388349
Original Issue 6-96
Revised 4-2-97

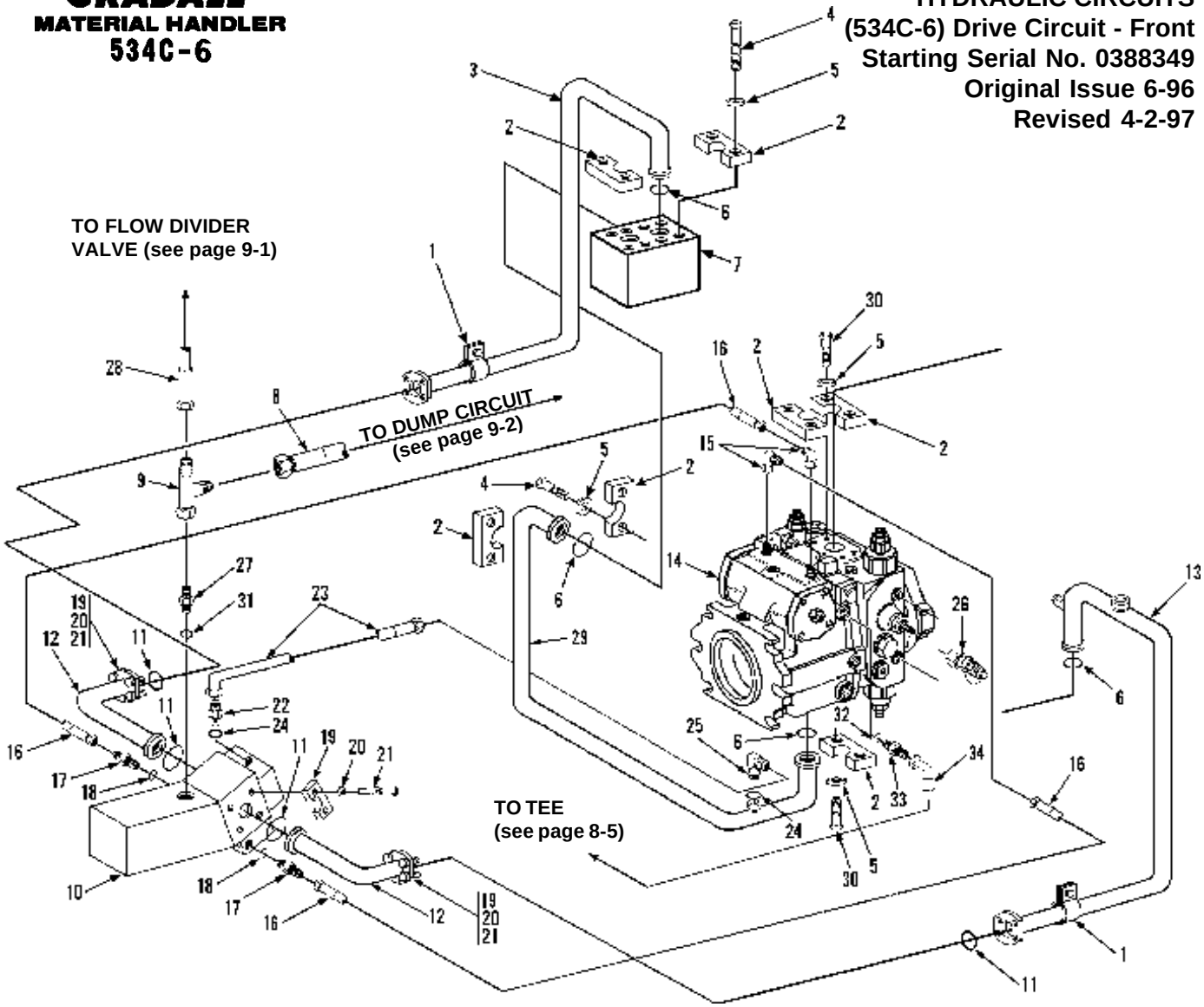

Item	Part No.	Qty.	Description Of Part
1	9020-5792	2	CUSHION CLAMP
2	8471-2738	8	SPLIT FLANGE CLAMP
3	9108-3418	1	TUBE ASSY
4	8320-1155	8	HEX HD CAPSCREW, 7/16-14X1-3/4, GR8
5	8855-1012	16	LOCKWASHER, 7/16
6	9108-3106	3	O-RING
7		Ref	TRACTION LOCK VALVE (see page 10-25 for details)
8	8471-7911	1	HOSE ASSY
9	8866-2239	1	SWIVEL NUT RUN TEE, 3/8 TUBE
10		Ref	FRONT DRIVE MOTOR (see page 10-20 for details)
11	9108-3339	4	O-RING
12	8471-8658	2	HOSE ASSY
13	9114-3055	1	TUBE ASSY
14		Ref	HYDROSTATIC TRANSMISSION PUMP (see page 10-18 for details)
15	9002-7906	2	ELBOW, 90 DEGREES (includes o-ring)
	8859-1204	2	O-RING
*16	8471-8934	2	HOSE ASSY

Item	Part No.	Qty.	Description Of Part
17	8866-2003	2	CONNECTOR (includes item 18)
18	8859-1202	2	O-RING
19	8471-2739	8	SPLIT FLANGE CLAMP
20	8856-1013	16	LOCKWASHER, 1/2
21	8320-1120	16	HEX HD CAPSCREW, 1/2-13X1-3/4, GR5
22	8866-2017	1	CONNECTOR (includes item 24)
23	8471-8931	1	HOSE ASSY
24	8859-1204	1	O-RING
25	8866-2064	1	ELBOW, 90 DEGREES (includes item 24)
26	9105-3020	2	TEST COUPLING
27	9105-3426	1	STRAIGHT THREAD ADAPTER (includes item 31)
28	8471-7832	1	HOSE ASSY
29	9116-3201	1	TUBE ASSY
30	8320-1135	8	HEX HD CAPSCREW, 7/16-14X1-1/2, GR8
31	8859-1207	1	O-RING
32	8859-1205	1	O-RING
33	8866-2018	1	CONNECTOR (includes item 32)
34	8471-7341	1	HOSE ASSY

* *Changed part number on item 16.*

HYDRAULIC CIRCUITS
(534C-6) Drive Circuit - Rear
Starting Serial No. 0188002
Original Issue 1-90
Revised 2-19-98

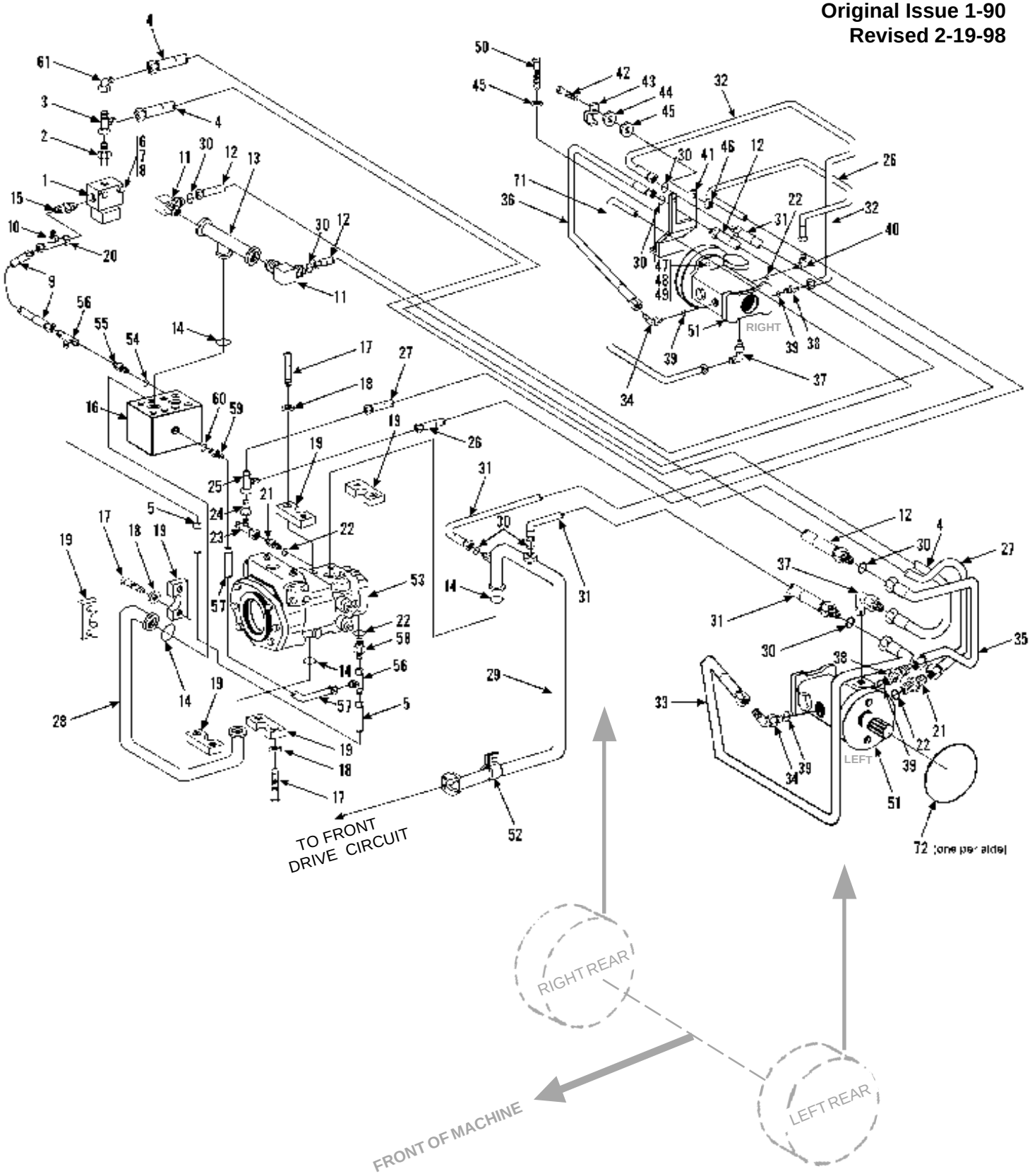

* *Added item 72.*

Item	Part No.	Qty.	Description Of Part
1		Ref	SOLENOID VALVE (see page 10-14 for details)
2	9108-3213	1	ADAPTER, 1/4 TUBE
3	8866-2237	1	SWIVEL NUT RUN TEE, 1/4 TUBE
4	8471-8181	1	HOSE ASSY
5	8471-8597	1	HOSE ASSY
6	8820-1008	2	HEX HD CAPSCREW, 1/4-20X1-3/4, GR5
7	8856-1001	2	PLAIN WASHER, 1/4
8	8855-1009	2	LOCKWASHER, 1/4
9	8471-7830	1	HOSE ASSY
10	7713-3089	1	TEST FITTING
11	8866-2421	2	ELBOW, 45 DEGREES (includes o-ring)
	8859-1020	2	O-RING
12	8471-7898	2	HOSE ASSY
13	9108-3266	1	TUBE ASSY
14	9108-3106	4	O-RING
15	8866-1009	1	MALE CONNECTOR, 3/8X3/8 TUBE
16		Ref	TRACTION LOCK VALVE (see page 10-25 for details)
17	8320-1135	20	HEX HD CAPSCREW, 7/16-14X1-1/2, GR8
18	8855-1012	20	LOCKWASHER, 7/16
19	8471-2738	10	SPLIT FLANGE CLAMP
20	9104-3163	1	TUBE ASSY
21	8866-2008	2	CONNECTOR (includes item 22)
22	8859-1207	4	O-RING
23	8866-2142	1	RUN TEE (includes item 22)
24	8365-1133	1	REDUCER, W/ADAPTER
25	8866-2240	1	SWIVEL NUT RUN TEE, 1/2 TUBE
26	8471-8182	1	HOSE ASSY
27	8471-8183	1	HOSE ASSY
28	9108-3095	1	TUBE ASSY
29	9108-3419	1	TUBE ASSY
30	8859-1508	10	O-RING
31	8471-7899	2	HOSE ASSY
32	9108-3465	1	TUBE ASSY
33	9108-3040	1	TUBE ASSY
34	8866-2425	2	ELBOW, 45 DEGREES (includes item 39)
35	9108-3463	1	TUBE ASSY
36	9108-3466	1	TUBE ASSY
37	9108-5064	2	RESTRICTOR
38	8866-2306	2	CONNECTOR (includes item 39)
39	8859-1209	4	O-RING
40	8866-2087	1	ELBOW, 45 DEGREES (includes item 22)
41	9108-1522	1	R.H. TUBE SUPPORT
	9108-1523	1	L.H. TUBE SUPPORT
42	8820-1036	4	HEX HD CAPSCREW, 3/8-16X1-1/4, GR5
43	9108-1201	4	TUBE CLAMP
44	9002-7470	4	HARDENED WASHER, 3/8
45	8855-1011	12	LOCKWASHER, 3/8
46	8850-1006	4	HEX NUT, 3/8-16
47	9112-3092	4	STUD
48	9002-7471	4	HARD WASHER
49	9108-3449	4	HEX NUT, 1/2-13
50	8820-1035	4	HEX HD CAPSCREW, 3/8-16X1, GR5

REAR DRIVE HOSE CLAMP LOCATIONS

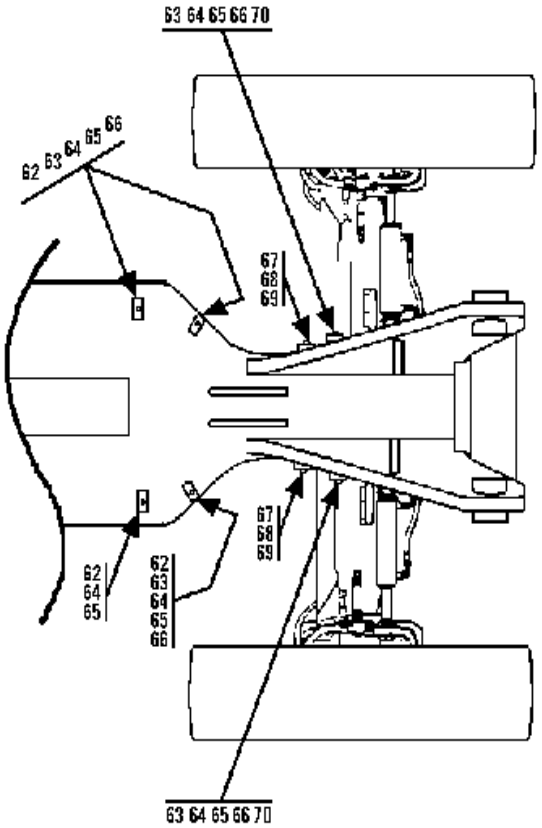

Item	Part No.	Qty.	Description Of Part
51		Ref	REAR DRIVE MOTOR (see page 10-10 for details)
52	9020-5792	1	CUSHION CLAMP
53		Ref	HYDROSTATIC TRANSMISSION PUMP (see page 10-18 for details)
54	8859-1205	1	O-RING
55	8866-2018	1	CONNECTOR (includes item 54)
56	8866-2239	2	SWIVEL NUT RUN TEE, 3/8 TUBE
57	8471-7597	1	HOSE ASSY
58	9105-3426	1	STRAIGHT THREAD REDUCING CONNECTOR (includes item 22)
59	9108-3306	1	STRAIGHT THREAD CONNECTOR
60	8859-1206	1	O-RING
61	8866-2103	1	ELBOW, 90 DEGREES (swivel nut)
62	7713-3279	7	CLAMP SET
63	7713-3306	5	STACK BOLT
64	8820-1023	6	HEX BOLT
65	7713-3137	6	COVER PLATE
66	7713-3390	5	SAFETY CLIP
67	7713-3053	2	HOSE CLAMP
68	7713-3052	2	COVER PLATE
69	7713-3209	4	HEX HD CAPSCREW, 1/4-20X1-3/8
70	7732-3029	4	HOSE CLAMP
71	8471-8946	1	HOSE ASSY
*72	9002-3155	2	O-RING (one each side)

** Added item 72.*

HYDRAULIC CIRCUITS
(534C-6) Drive Circuit - Rear
Starting Serial No. 0188251
Original Issue 7-93
Revised 2-19-98

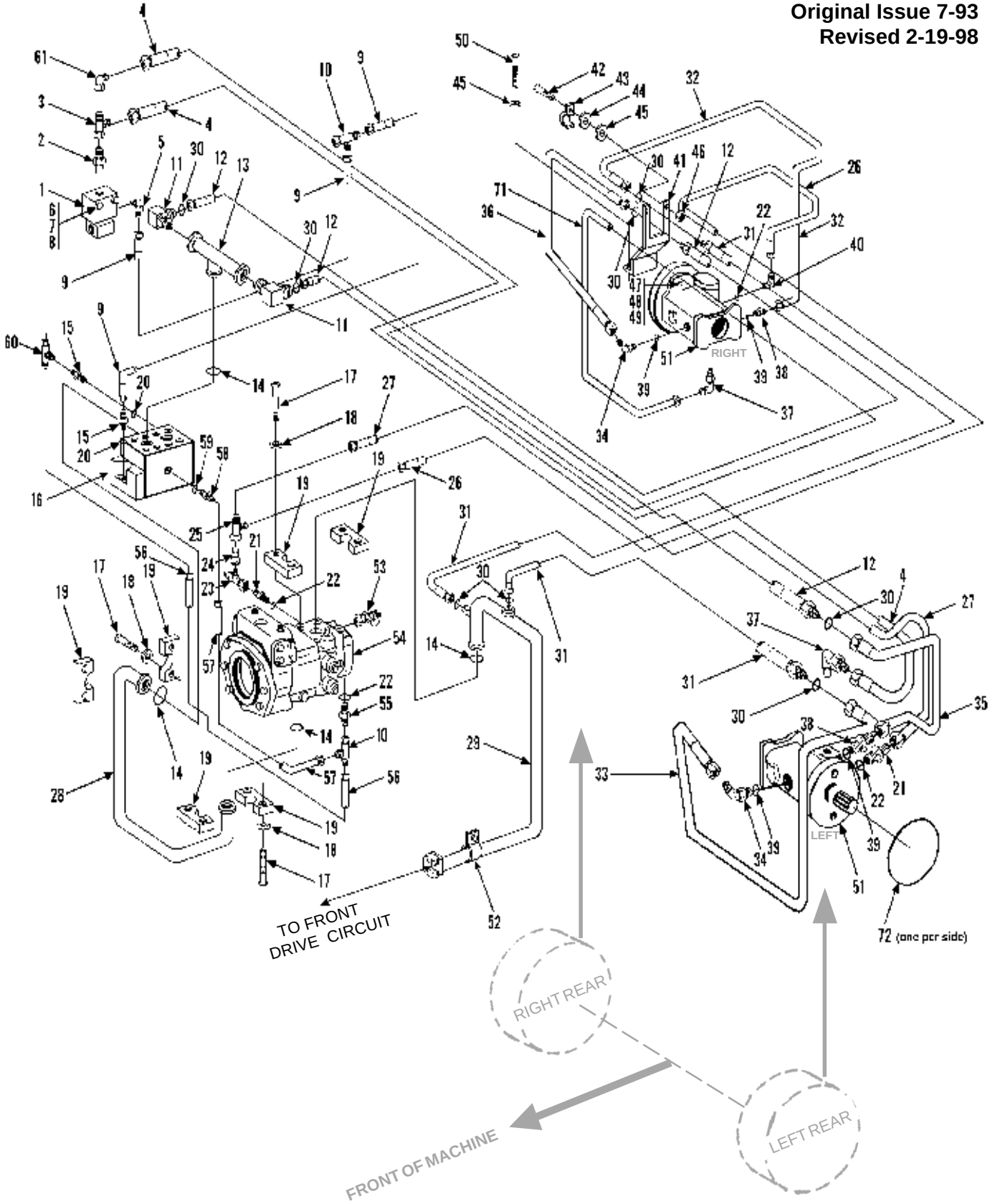

** Added item 72.*

HYDRAULIC CIRCUITS
(534C-6) Drive Circuit - Rear
Starting Serial No. 0188251
Original Issue 7-93
Revised 2-19-98

Item	Part No.	Qty.	Description Of Part
1		Ref	SOLENOID VALVE (see page 10-14 for details)
2	9108-3213	1	ADAPTER, 1/4 TUBE
3	8866-2237	1	SWIVEL NUT RUN TEE, 1/4 TUBE
4	8471-8181	1	HOSE ASSY
5	8866-1109	1	ELBOW, 90 DEGREES
6	8820-1008	2	HEX HD CAPSCREW, 1/4-20X1-3/4, GR5
7	8856-1001	2	PLAIN WASHER, 1/4
8	8855-1009	2	LOCKWASHER, 1/4
9	8471-7930	2	HOSE ASSY
10	8866-2239	2	SWIVEL NUT RUN TEE, 3/8 TUBE
11	8866-2421	2	ELBOW, 45 DEGREES (includes o-ring)
	8859-1020	2	O-RING
12	8471-7898	2	HOSE ASSY
13	9108-3266	1	TUBE ASSY
14	9108-3106	4	O-RING
15	8866-2005	2	STRAIGHT THREAD CONNECTOR (includes item 20)
16		Ref	TRACTION LOCK VALVE (see page 10-25 for details)
17	8320-1135	20	HEX HD CAPSCREW, 7/16-14X1-1/2, GR8
18	8855-1012	20	LOCKWASHER, 7/16
19	8471-2738	10	SPLIT FLANGE CLAMP
20	8859-1204	2	O-RING
21	8866-2008	2	CONNECTOR (includes item 22)
22	8859-1207	4	O-RING
23	8866-2242	1	SWIVEL NUT RUN TEE, 3/4 TUBE
24	8365-1133	1	REDUCER, W/ADAPTER
25	8866-2240	1	SWIVEL NUT RUN TEE, 1/2 TUBE
26	8471-8182	1	HOSE ASSY
27	8471-8183	1	HOSE ASSY
28	9108-3095	1	TUBE ASSY
29	9108-3419	1	TUBE ASSY
30	8859-1508	10	O-RING
31	8471-7899	2	HOSE ASSY
32	9108-3465	1	TUBE ASSY
33	9108-3464	1	TUBE ASSY
34	8866-2425	2	ELBOW, 45 DEGREES (includes item 39)
35	9108-3463	1	TUBE ASSY
36	9108-3466	1	TUBE ASSY
37	9108-5064	2	RESTRICTOR
38	8866-2306	2	CONNECTOR (includes item 39)
39	8859-1209	4	O-RING
40	8866-2087	1	ELBOW, 45 DEGREES (includes item 22)
41	9108-1522	1	R.H. TUBE SUPPORT
	9108-1523	1	L.H. TUBE SUPPORT
42	8820-1036	4	HEX HD CAPSCREW, 3/8-16X1-1/4, GR5
43	9108-1201	4	TUBE CLAMP
44	9002-7470	4	HARDENED WASHER, 3/8
45	8855-1011	12	LOCKWASHER, 3/8
46	8850-1006	4	HEX NUT, 3/8-16
47	9112-3092	4	STUD
48	9002-7471	4	HARD WASHER
49	9108-3449	4	HEX NUT, 1/2-13
50	8820-1035	4	HEX HD CAPSCREW, 3/8-16X1, GR5

REAR DRIVE HOSE CLAMP LOCATIONS

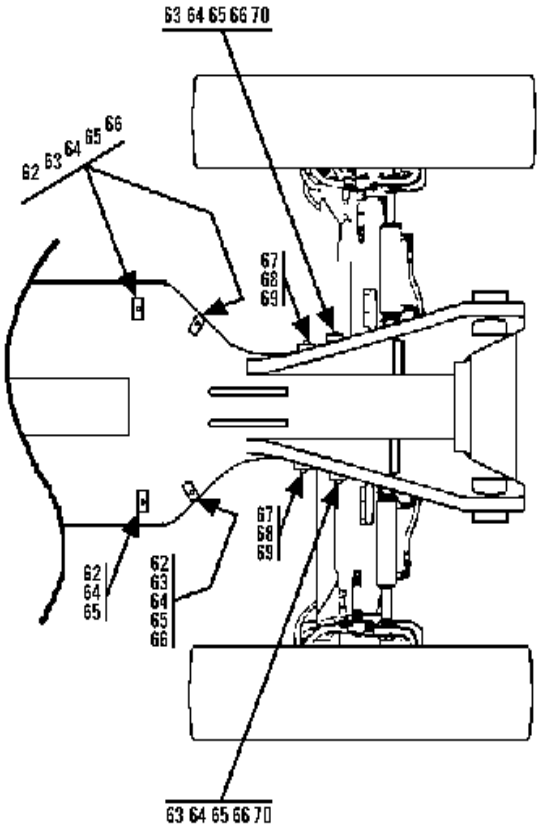

Item	Part No.	Qty.	Description Of Part
51		Ref	REAR DRIVE MOTOR (see page 10-10 for details)
52	9020-5792	1	CUSHION CLAMP
53	9108-3475	2	TEST COUPLING
54		Ref	HYDROSTATIC TRANSMISSION PUMP (see page 10-18 for details)
55	9105-3426	1	STRAIGHT THREAD REDUCING CONNECTOR (includes item 18)
56	8471-8221	1	HOSE ASSY
57	8471-8207	1	HOSE ASSY
58	9108-3306	1	STRAIGHT THREAD CONNECTOR
59	8859-1206	1	O-RING
60	8866-2224	1	SWIVEL NUT BRANCH TEE, 3/8 TUBE
61	8866-2103	1	ELBOW, 90 DEGREES (swivel nut)
62	7713-3279	7	CLAMP SET
63	7713-3306	5	STACK BOLT
64	8820-1023	6	HEX BOLT
65	7713-3137	6	COVER PLATE
66	7713-3390	5	SAFETY CLIP
67	7713-3053	2	HOSE CLAMP
68	7713-3052	2	COVER PLATE
69	7713-3209	4	HEX HD CAPSCREW, 1/4-20X1-3/8
70	7732-3029	4	HOSE CLAMP
71	8471-8946	1	HOSE ASSY
* 72	9002-3155	2	O-RING (one each side)

** Added item 72.*

HYDRAULIC CIRCUITS
(534C-6) Drive Circuit - Rear
Starting Serial No. 0388349
Original Issue 6-96
Revised 2-19-98

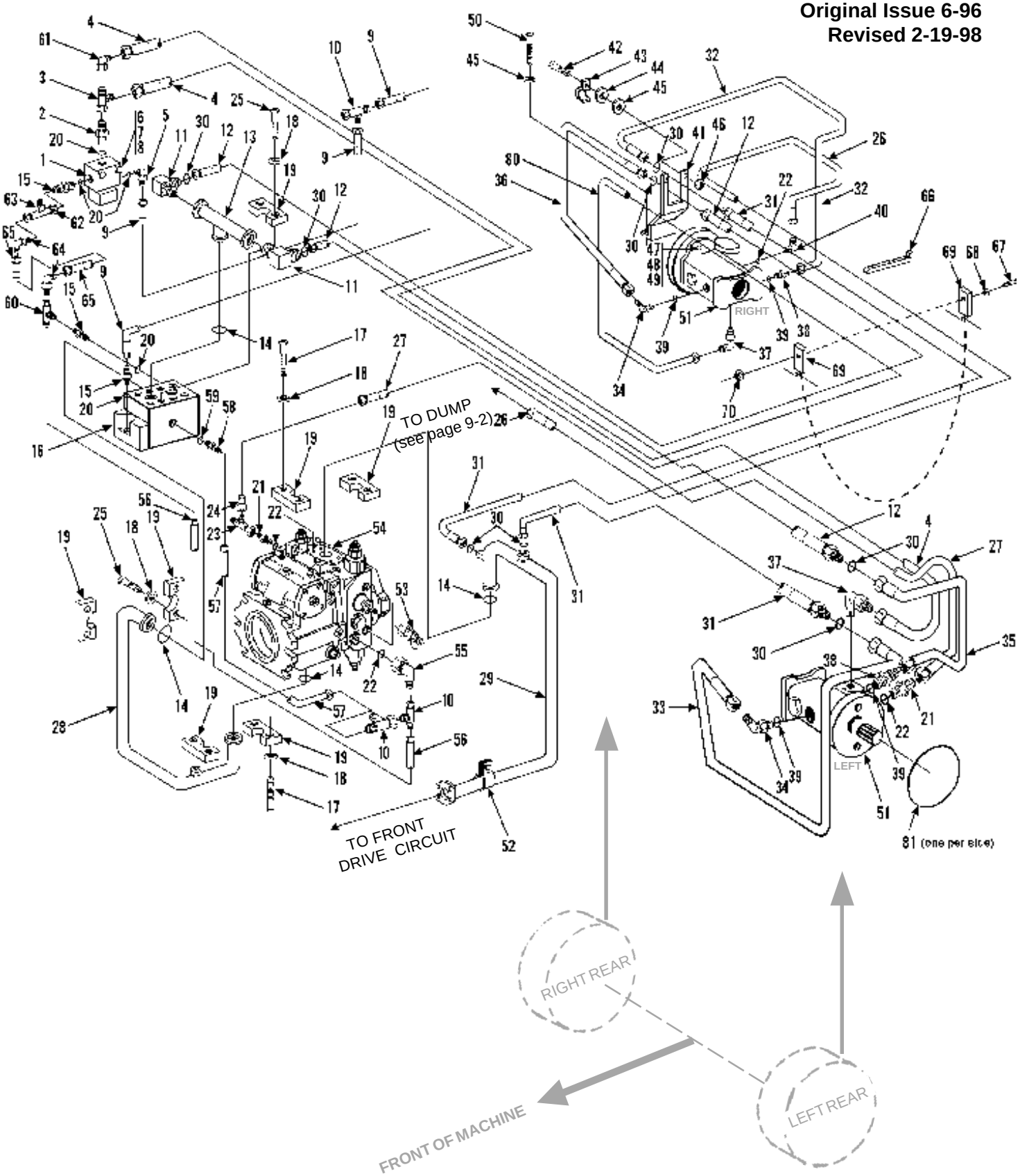

* *Added item 81.*

HYDRAULIC CIRCUITS
(534C-6) Drive Circuit - Rear
Starting Serial No. 0388349
Original Issue 6-96
Revised 2-19-98

Item	Part No.	Qty.	Description Of Part
1		Ref	SOLENOID VALVE (see page 10-14 for details)
2	8866-2017	1	CONNECTOR (includes item 20)
3	8866-2237	1	SWIVEL NUT RUN TEE, 1/4 TUBE
* 4	8471-8181	1	HOSE ASSY
5	8866-2064	1	ELBOW, 90 DEGREES (includes item 20)
6	8820-1008	2	HEX HD CAPSCREW, 1/4-20X1-3/4, GR5
7	8856-1001	2	PLAIN WASHER, 1/4
8	8855-1009	2	LOCKWASHER, 1/4
9	8471-7930	2	HOSE ASSY
10	8866-2239	2	SWIVEL NUT RUN TEE, 3/8 TUBE
11	8866-2421	2	ELBOW, 45 DEGREES (includes o-ring)
	8859-1207	2	O-RING
12	8471-7898	2	HOSE ASSY
13	9108-3266	1	TUBE ASSY
14	9108-3106	4	O-RING
15	8866-2005	3	STRAIGHT THREAD CONNECTOR (includes item 20)
16		Ref	TRACTION LOCK VALVE (see page 10-25 S/N 0288568 for details)
17	8320-1135	8	HEX HD CAPSCREW, 7/16-14X1-1/2, GR8
18	8855-1012	16	LOCKWASHER, 7/16
19	8471-2738	8	SPLIT FLANGE CLAMP
20	8859-1204	5	O-RING
21	8866-2008	2	CONNECTOR (includes item 22)
22	8859-1207	4	O-RING
23	8866-2242	1	SWIVEL NUT RUN TEE, 3/4 TUBE
24	8365-1133	1	REDUCER, W/ADAPTER
25	8320-1155	8	HEX HD CAPSCREW, 7/16-14X1-3/4, GR8
26	8471-8182	1	HOSE ASSY
27	8471-8183	1	HOSE ASSY
28	9116-3201	1	TUBE ASSY
29	9114-3055	1	TUBE ASSY
30	8859-1508	10	O-RING
31	8471-8882	2	HOSE ASSY
32	9108-3465	1	TUBE ASSY
33	9108-3464	1	TUBE ASSY
34	8866-2425	2	ELBOW, 45 DEGREES (includes item 39)
35	9108-3463	1	TUBE ASSY
36	9108-3466	1	TUBE ASSY
37	9108-5064	2	RESTRICTOR
38	8866-2306	2	CONNECTOR (includes item 39)
39	8859-1209	4	O-RING
40	8866-2087	1	ELBOW, 45 DEGREES (includes item 22)
41	9108-1522	1	R.H. TUBE SUPPORT
	9108-1523	1	L.H. TUBE SUPPORT
42	8820-1036	4	HEX HD CAPSCREW, 3/8-16X1-1/4, GR5
43	9108-1201	4	TUBE CLAMP
44	9002-7470	4	HARDENED WASHER, 3/8
45	8855-1011	12	LOCKWASHER, 3/8
46	8850-1006	4	HEX NUT, 3/8-16
47	9112-3092	4	STUD
48	9002-7471	4	HARD WASHER
49	9108-3449	4	HEX NUT, 1/2-13
50	8820-1035	4	HEX HD CAPSCREW, 3/8-16X1, GR5
51		Ref	REAR DRIVE MOTOR (see page 10-10 for details)
52	9020-5792	1	CUSHION CLAMP
53	9105-3020	2	TEST COUPLING

REAR DRIVE HOSE CLAMP LOCATIONS

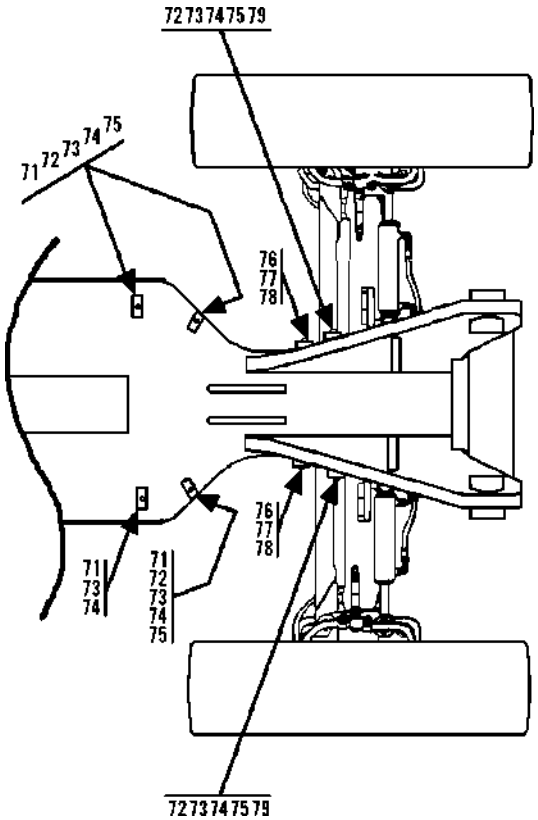

Item	Part No.	Qty.	Description Of Part
54		Ref	HYDROSTATIC TRANSMISSION PUMP (see page 10-18 S/N 0388349 for details)
55	9108-3222	1	STRAIGHT THREAD REDUCING CONNECTOR (includes item 22)
56	8471-8221	1	HOSE ASSY
57	8471-8207	1	HOSE ASSY
58	9108-3306	1	STRAIGHT THREAD CONNECTOR
59	8859-1206	1	O-RING
60	8866-2224	1	SWIVEL NUT BRANCH TEE, 3/8 TUBE
61	8866-2103	1	ELBOW, 90 DEGREES (swivel nut)
62	9104-3163	1	TUBE ASSY
63	7713-3089	1	TEST FITTING
64	8866-2105	2	ELBOW, 90 DEGREES (swivel nut)
65	8471-8208	1	HOSE ASSY
66	9002-7187	12	NYLON TIE
67	8820-1018	2	HEX HD CAPSCREW, 5/16-18X3/4, GR5
68	8856-1108	4	WASHER
69	9130-3049	2	HOSE SUPPPORT (one each side)
70	8850-1005	2	HEX NUT
71	7713-3279	7	CLAMP SET
72	7713-3306	5	STACK BOLT
73	8820-1023	6	HEX BOLT
74	7713-3137	6	COVER PLATE
75	7713-3390	5	SAFETY CLIP
76	7713-3053	2	HOSE CLAMP
77	7713-3052	2	COVER PLATE
78	7713-3209	4	HEX HD CAPSCREW, 1/4-20X1-3/8
79	7732-3029	4	HOSE CLAMP
80	8471-8946	1	HOSE ASSY
*81	9002-3155	2	O-RING (one each side)

Added item 81.

HYDRAULIC CIRCUITS
(Turbo) Drive Circuit - Front
Starting Serial No. 0488238
Original Issue 11-97

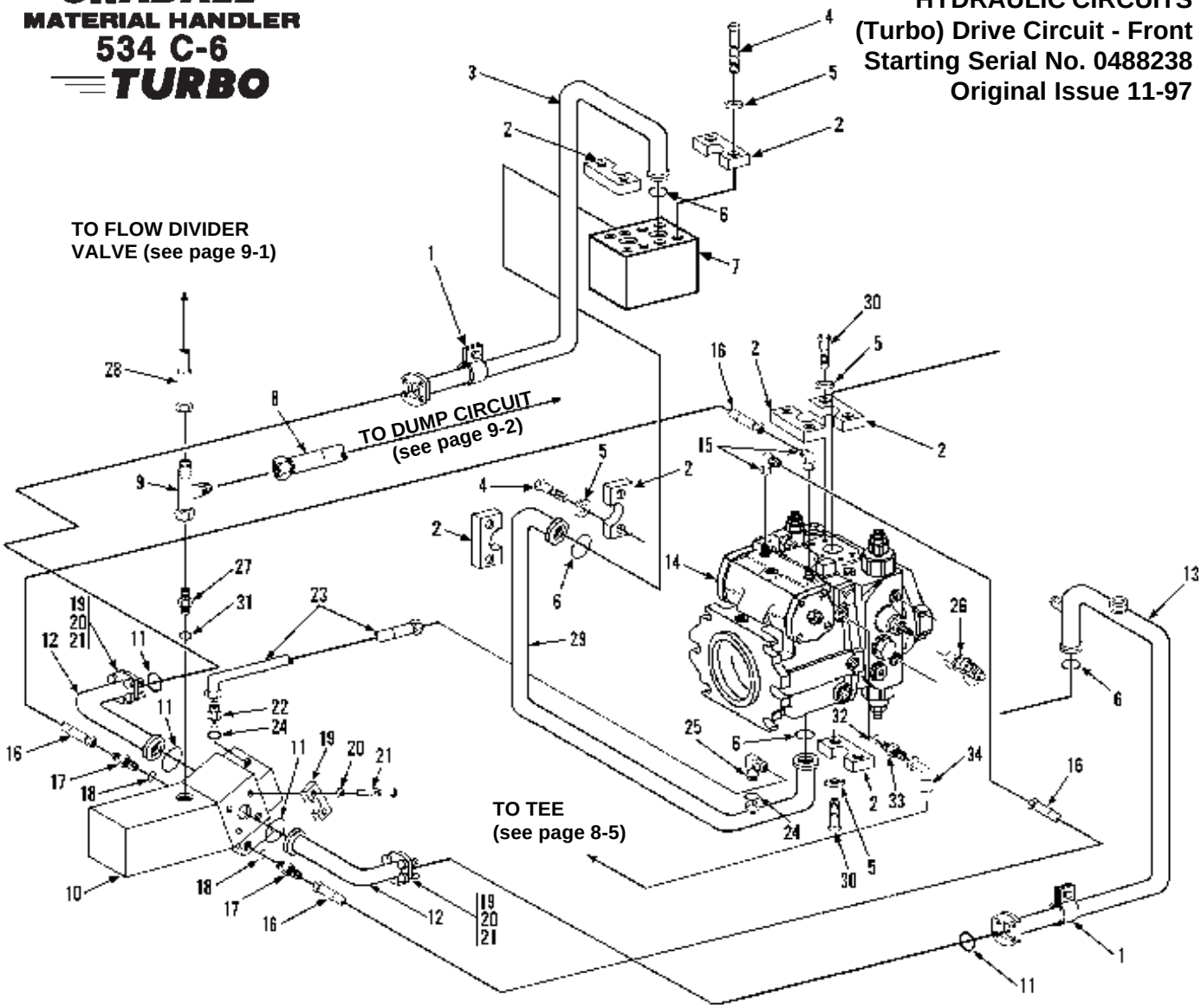

Item	Part No.	Qty.	Description Of Part
1	9020-5792	2	CUSHION CLAMP
2	8471-2738	8	SPLIT FLANGE CLAMP
3	9108-3418	1	TUBE ASSY
4	8320-1155	8	HEX HD CAPSCREW, 7/16-14X1-3/4, GR8
5	8855-1012	16	LOCKWASHER, 7/16
6	9108-3106	3	O-RING
7		Ref	TRACTION LOCK VALVE (see page 10-25 for details)
8	8471-8999	1	HOSE ASSY
9	8866-2239	1	SWIVEL NUT RUN TEE, 3/8 TUBE
10		Ref	FRONT DRIVE MOTOR (see page 10-20 for details)
11	9108-3339	4	O-RING
12	8471-8658	2	HOSE ASSY
13	9116-3122	1	TUBE ASSY
14		Ref	HYDROSTATIC TRANSMISSION PUMP (see page 10-18 for details)
15	9002-7906	2	ELBOW, 90 DEGREES (includes o-ring)
	8859-1204	2	O-RING
16	8471-8934	2	HOSE ASSY

Item	Part No.	Qty.	Description Of Part
17	8866-2003	2	CONNECTOR (includes item 18)
18	8859-1202	2	O-RING
19	8471-2739	8	SPLIT FLANGE CLAMP
20	8855-1013	16	LOCKWASHER, 1/2
21	8320-1120	16	HEX HD CAPSCREW, 1/2-13X1-3/4, GR5
22	9105-3426	1	CONNECTOR (includes item 24)
23	8471-8931	1	HOSE ASSY
24	8859-1204	1	O-RING
25	8866-2064	1	ELBOW, 90 DEGREES (includes item 24)
26	9105-3020	2	TEST COUPLING
27	9105-3426	1	STRAIGHT THREAD ADAPTER (includes item 31)
28	8471-7832	1	HOSE ASSY
29	9116-3201	1	TUBE ASSY
30	8320-1135	8	HEX HD CAPSCREW, 7/16-14X1-1/2, GR8
31	8859-1207	1	O-RING
32	8859-1205	1	O-RING
33	8866-2018	1	CONNECTOR (includes item 32)
34	8471-7341	1	HOSE ASSY

HYDRAULIC CIRCUITS
Rear Drive Circuit (534C-6 TURBO)
Starting Serial No. 0388043
Original Issue 8-95
Revised 2-19-98

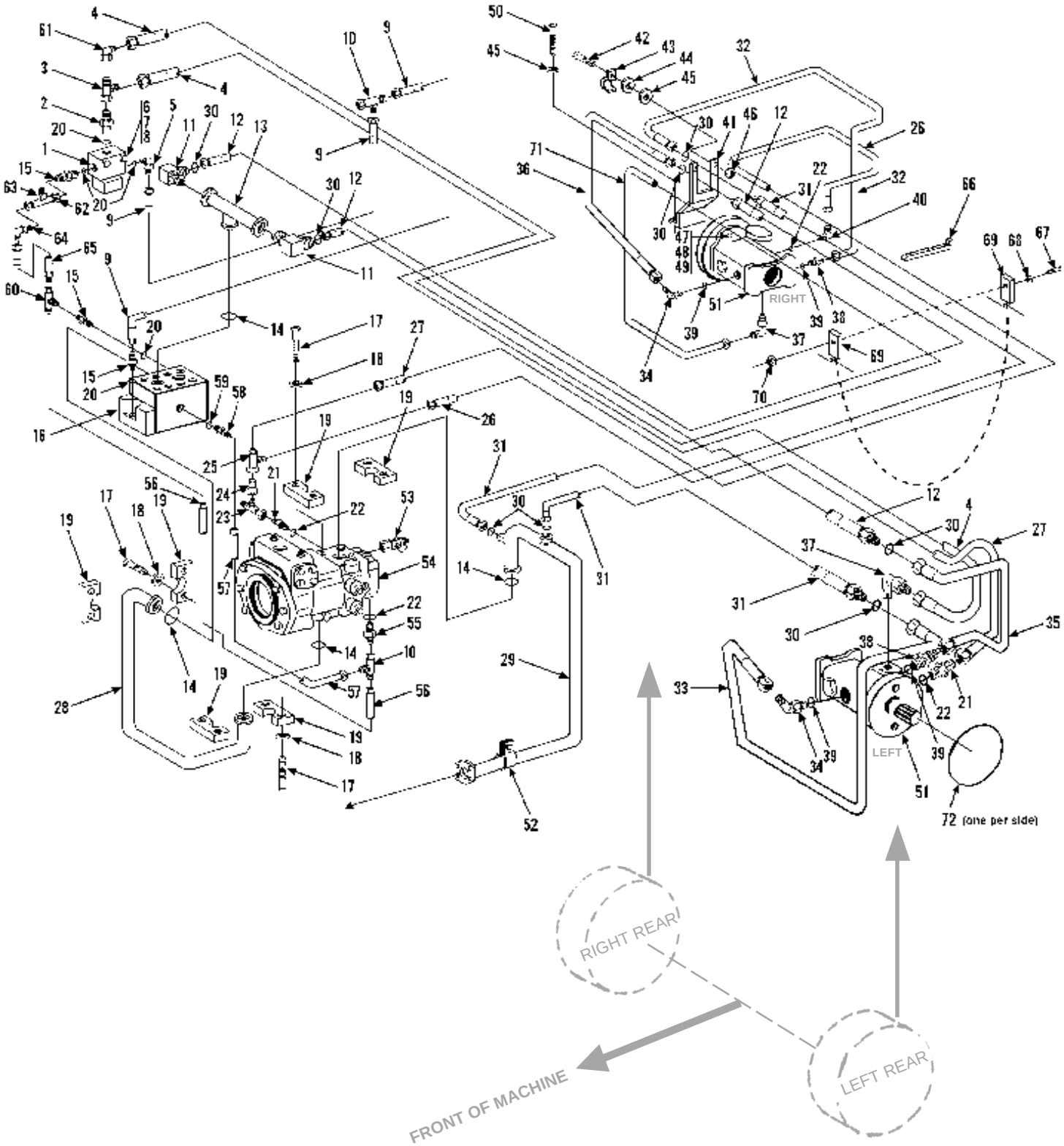

* *Added item 72.*

Item	Part No.	Qty.	Description Of Part
1		Ref	SOLENOID VALVE (see page 10-14 S/N 0288777 for details)
2	8866-2017	1	CONNECTOR (includes item 20)
3	8866-2237	1	SWIVEL NUT RUN TEE, 1/4 TUBE
* 4	8471-8181	1	HOSE ASSY
5	8866-2064	1	ELBOW, 90 DEGREES (includes item 20)
6	8820-1008	2	HEX HD CAPSCREW, 1/4-20X1-3/4, GR5
7	8856-1001	2	PLAIN WASHER, 1/4
8	8855-1009	2	LOCKWASHER, 1/4
9	8471-7930	2	HOSE ASSY
10	8866-2239	2	SWIVEL NUT RUN TEE, 3/8 TUBE
11	8866-2421	2	ELBOW, 45 DEGREES (includes o-ring)
	8859-1020	2	O-RING
12	8471-7898	2	HOSE ASSY
13	9108-3266	1	TUBE ASSY
14	9108-3106	4	O-RING
15	8866-2005	3	STRAIGHT THREAD CONNECTOR (includes item 20)
16		Ref	TRACTION LOCK VALVE (see page 10-25 S/N 0288568 for details)
17	8320-1135	20	HEX HD CAPSCREW, 7/16-14X1-1/2, GR8
18	8855-1012	20	LOCKWASHER, 7/16
19	8471-2738	10	SPLIT FLANGE CLAMP
20	8859-1204	5	O-RING
21	8866-2008	2	CONNECTOR (includes item 22)
22	8859-1207	4	O-RING
23	8866-2242	1	SWIVEL NUT RUN TEE, 3/4 TUBE
24	8365-1133	1	REDUCER, W/ADAPTER
25	8866-2240	1	SWIVEL NUT RUN TEE, 1/2 TUBE
26	8471-8182	1	HOSE ASSY
27	8471-8183	1	HOSE ASSY
28	9108-3095	1	TUBE ASSY
29	9108-3419	1	TUBE ASSY
30	8859-1508	10	O-RING
31	8471-7899	2	HOSE ASSY
32	9108-3465	1	TUBE ASSY
33	9108-3464	1	TUBE ASSY
34	8866-2425	2	ELBOW, 45 DEGREES (includes item 39)
35	9108-3463	1	TUBE ASSY
36	9108-3466	1	TUBE ASSY

Item	Part No.	Qty.	Description Of Part
37	9108-5064	2	RESTRICTOR
38	8866-2306	2	CONNECTOR (includes item 39)
39	8859-1209	4	O-RING
40	8866-2087	1	ELBOW, 45 DEGREES (includes item 22)
41	9108-1522	1	R.H. TUBE SUPPORT
	9108-1523	1	L.H. TUBE SUPPORT
42	8820-1036	4	HEX HD CAPSCREW, 3/8-16X1-1/4, GR5
43	9108-1201	4	TUBE CLAMP
44	9002-7470	4	HARDENED WASHER, 3/8
45	8855-1011	12	LOCKWASHER, 3/8
46	8850-1006	4	HEX NUT, 3/8-16
47	9112-3092	4	STUD
48	9002-7471	4	HARD WASHER
49	9108-3449	4	HEX NUT, 1/2-13
50	8820-1035	4	HEX HD CAPSCREW, 3/8-16X1, GR5
51		Ref	REAR DRIVE MOTOR (see page 10-10 for details)
52	9020-5792	1	CUSHION CLAMP
53	9108-3475	2	TEST COUPLING
54		Ref	HYDROSTATIC TRANSMISSION PUMP (see page 10-18 S/N 0288568 for details)
55	9105-3426	1	STRAIGHT THREAD REDICING CONNECTOR (includes item 18)
56	8471-8221	1	HOSE ASSY
57	8471-8207	1	HOSE ASSY
58	9108-3306	1	STRAIGHT THREAD CONNECTOR
59	8859-1206	1	O-RING
60	8866-2224	1	SWIVEL NUT BRANCH TEE, 3/8 TUBE
61	8866-2103	1	SWIVEL NUT ELBOW, 1/4 TUBE
62	9104-3163	1	TUBE ASSY
63	7713-3089	1	TEST FITTING
64	8866-2105	1	ELBOW, 90 DEGREES (swivel nut)
65	8471-8208	1	HOSE ASSY
66	9002-7187	12	NYLON TIE
67	8820-1018	2	HEX HD CAPSCREW, 5/16-18X3/4, GR5
68	8856-1108	4	WASHER
69	9130-3049	2	HOSE SUPPPORT (one each side)
70	8850-1005	2	HEX NUT
71	8471-8946	1	HOSE ASSY
*72	9002-3155	2	O-RING (one each side)

** Added item 72*

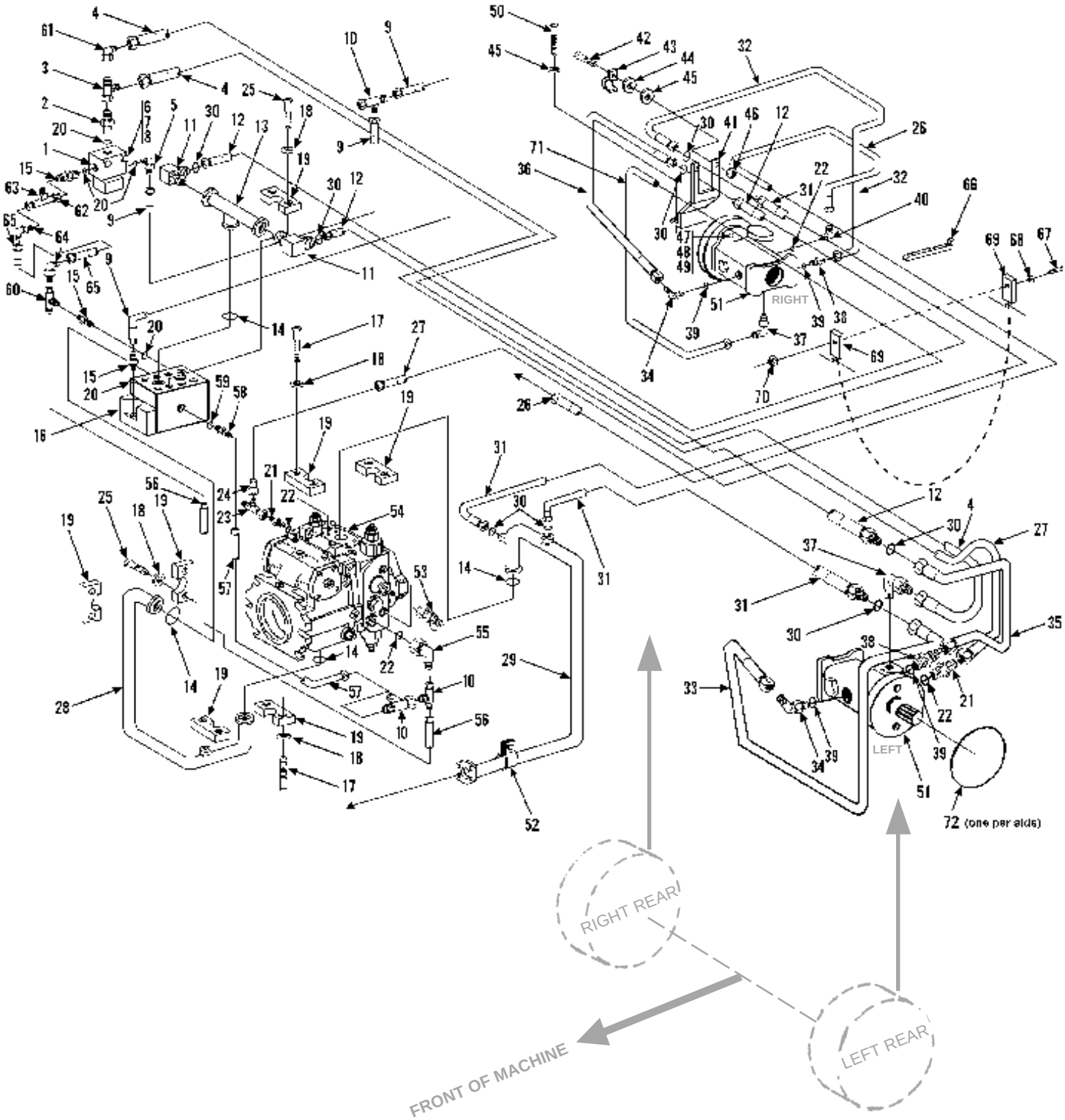

* *Added item 72.*

Item	Part No.	Qty.	Description Of Part
1		Ref	SOLENOID VALVE (see page 10-14 S/N 0288777 for details)
2	8866-2017	1	CONNECTOR (includes item 20)
3	8866-2237	1	SWIVEL NUT RUN TEE, 1/4 TUBE
4	8471-8181	1	HOSE ASSY
5	8866-2064	1	ELBOW, 90 DEGREES (includes item 20)
6	8820-1008	2	HEX HD CAPSCREW, 1/4-20X1-3/4, GR5
7	8856-1001	2	PLAIN WASHER, 1/4
8	8855-1009	2	LOCKWASHER, 1/4
9	8471-7930	2	HOSE ASSY
10	8866-2239	2	SWIVEL NUT RUN TEE, 3/8 TUBE
11	8866-2421	2	ELBOW, 45 DEGREES (includes o-ring)
	8859-1207	2	O-RING
12	8471-7898	2	HOSE ASSY
13	9108-3266	1	TUBE ASSY
14	9108-3106	4	O-RING
15	8866-2005	3	STRAIGHT THREAD CONNECTOR (includes item 20)
16		Ref	TRACTION LOCK VALVE (see page 10-25 S/N 0288568 for details)
17	8320-1135	8	HEX HD CAPSCREW, 7/16-14X1-1/2, GR8
18	8855-1012	16	LOCKWASHER, 7/16
19	8471-2738	8	SPLIT FLANGE CLAMP
20	8859-1204	5	O-RING
21	8866-2008	2	CONNECTOR (includes item 22)
22	8859-1207	4	O-RING
23	8866-2242	1	SWIVEL NUT RUN TEE, 3/4 TUBE
24	8365-1133	1	REDUCER, W/ADAPTER
25	8320-1155	8	HEX HD CAPSCREW, 7/16-14X1-3/4, GR8
26	8471-8756	1	HOSE ASSY
27	8471-8757	1	HOSE ASSY
28	9116-3201	1	TUBE ASSY
29	9114-3055	1	TUBE ASSY
30	8859-1508	10	O-RING
31	8471-8882	2	HOSE ASSY
32	9108-3465	1	TUBE ASSY
33	9108-3464	1	TUBE ASSY
34	8866-2425	2	ELBOW, 45 DEGREES (includes item 39)
35	9108-3463	1	TUBE ASSY
36	9108-3466	1	TUBE ASSY
37	9108-5064	2	RESTRICTOR
38	8866-2306	2	CONNECTOR (includes item 39)
39	8859-1209	4	O-RING
40	8866-2087	1	ELBOW, 45 DEGREES (includes item 22)
41	9108-1522	1	R.H. TUBE SUPPORT
	9108-1523	1	L.H. TUBE SUPPORT
42	8820-1036	4	HEX HD CAPSCREW, 3/8-16X1-1/4, GR5
43	9108-1201	4	TUBE CLAMP
44	9002-7470	4	HARDENED WASHER, 3/8
45	8855-1011	12	LOCKWASHER, 3/8
46	8850-1006	4	HEX NUT, 3/8-16
47	9112-3092	4	STUD
48	9002-7471	4	HARD WASHER
49	9108-3449	4	HEX NUT, 1/2-13
50	8820-1035	4	HEX HD CAPSCREW, 3/8-16X1, GR5
51		Ref	REAR DRIVE MOTOR (see page 10-10 for details)
52	9020-5792	1	CUSHION CLAMP
53	9105-3020	2	TEST COUPLING
54		Ref	HYDROSTATIC TRANSMISSION PUMP (see page 10-18 S/N 0388349 for details)
55	9108-3222	1	STRAIGHT THREAD REDUCING CONNECTOR (includes item 22)
56	8471-7524	1	HOSE ASSY
57	8471-8207	1	HOSE ASSY
58	9108-3306	1	STRAIGHT THREAD CONNECTOR
59	8859-1206	1	O-RING
60	8866-2224	1	SWIVEL NUT BRANCH TEE, 3/8 TUBE
61	8866-2103	1	ELBOW, 90 DEGREES (swivel nut)
62	9104-3163	1	TUBE ASSY
63	7713-3089	1	TEST FITTING
64	8866-2105	2	ELBOW, 90 DEGREES (swivel nut)
65	8471-8208	1	HOSE ASSY
66	9002-7187	12	NYLON TIE
67	8820-1018	2	HEX HD CAPSCREW, 5/16-18X3/4, GR5
68	8856-1108	4	WASHER
69	9130-3049	2	HOSE SUPPPORT (one each side)
70	8850-1005	2	HEX NUT
71	8471-8946	1	HOSE ASSY
*72	9002-3155	2	O-RING (one each side)

* *Added item 72.*

HYDRAULIC CIRCUITS
Rear Drive Circuit (534C-6 TURBO)
Starting Serial No. 0488238
Original Issue 11-97
Revised 2-19-98

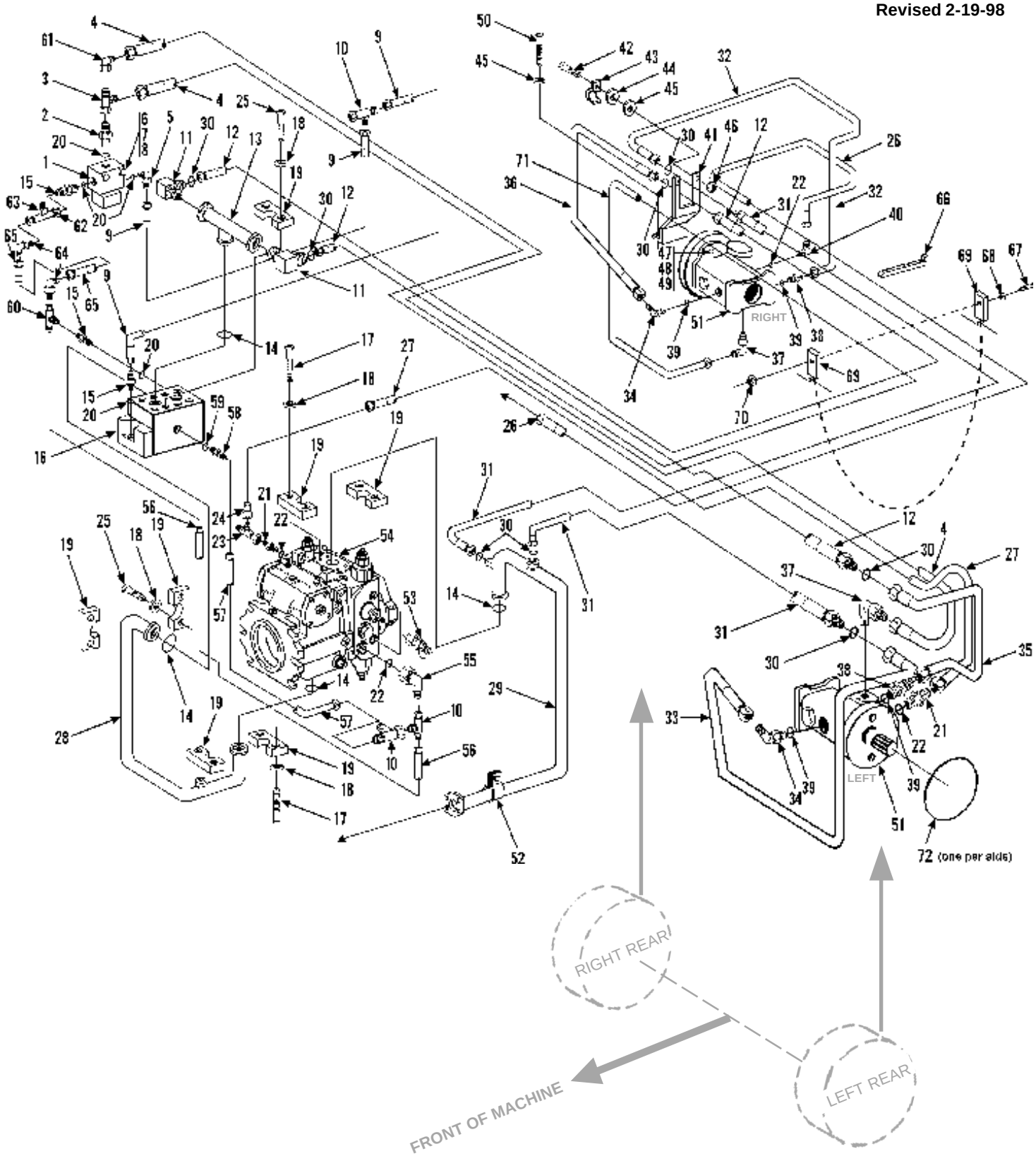

* *Added item 72.*

Item	Part No.	Qty.	Description Of Part
1		Ref	SOLENOID VALVE (see page 10-14 S/N 0288777 for details)
2	8866-2017	1	CONNECTOR (includes item 20)
3	8866-2237	1	SWIVEL NUT RUN TEE, 1/4 TUBE
4	8471-8946	1	HOSE ASSY
5	8866-2064	1	ELBOW, 90 DEGREES (includes item 20)
6	8820-1008	2	HEX HD CAPSCREW, 1/4-20X1-3/4, GR5
7	8856-1001	2	PLAIN WASHER, 1/4
8	8855-1009	2	LOCKWASHER, 1/4
9	8471-7930	2	HOSE ASSY
10	8866-2239	2	SWIVEL NUT RUN TEE, 3/8 TUBE
11	8866-2421	2	ELBOW, 45 DEGREES (includes o-ring)
	8859-1207	2	O-RING
12	8471-7898	2	HOSE ASSY
13	9108-3266	1	TUBE ASSY
14	9108-3106	4	O-RING
15	8866-2005	3	STRAIGHT THREAD CONNECTOR (includes item 20)
16		Ref	TRACTION LOCK VALVE (see page 10-25 S/N 0288568 for details)
17	8320-1135	8	HEX HD CAPSCREW, 7/16-14X1-1/2, GR8
18	8855-1012	16	LOCKWASHER, 7/16
19	8471-2738	8	SPLIT FLANGE CLAMP
20	8859-1204	5	O-RING
21	8866-2008	2	CONNECTOR (includes item 22)
22	8859-1207	4	O-RING
23	8866-2242	1	SWIVEL NUT RUN TEE, 3/4 TUBE
24	8365-1133	1	REDUCER, W/ADAPTER
25	8320-1155	8	HEX HD CAPSCREW, 7/16-14X1-3/4, GR8
26	8471-8756	1	HOSE ASSY
27	8471-8757	1	HOSE ASSY
28	9116-3201	1	TUBE ASSY
29	9116-3122	1	TUBE ASSY
30	8859-1508	10	O-RING
31	8471-8882	2	HOSE ASSY
32	9108-3465	1	TUBE ASSY
33	9108-3464	1	TUBE ASSY
34	8866-2425	2	ELBOW, 45 DEGREES (includes item 39)
35	9108-3463	1	TUBE ASSY

Item	Part No.	Qty.	Description Of Part
36	9108-3466	1	TUBE ASSY
37	9108-5064	2	RESTRICTOR
38	8866-2306	2	CONNECTOR (includes item 39)
39	8859-1209	4	O-RING
40	8866-2087	1	ELBOW, 45 DEGREES (includes item 22)
41	9108-1522	1	R.H. TUBE SUPPORT
	9108-1523	1	L.H. TUBE SUPPORT
42	8820-1036	4	HEX HD CAPSCREW, 3/8-16X1-1/4, GR5
43	9108-1201	4	TUBE CLAMP
44	9002-7470	4	HARDENED WASHER, 3/8
45	8855-1011	12	LOCKWASHER, 3/8
46	8850-1006	4	HEX NUT, 3/8-16
47	9112-3092	4	STUD
48	9002-7471	4	HARD WASHER
49	9108-3449	4	HEX NUT, 1/2-13
50	8820-1035	4	HEX HD CAPSCREW, 3/8-16X1, GR5
51		Ref	REAR DRIVE MOTOR (see page 10-10 for details)
52	9020-5792	1	CUSHION CLAMP
53	9105-3020	2	TEST COUPLING
54		Ref	HYDROSTATIC TRANSMISSION PUMP (see page 10-18 S/N 0388349 for details)
55	9108-3222	1	STRAIGHT THREAD REDUCING CONNECTOR (includes item 22)
56	8471-8221	1	HOSE ASSY
57	7713-3447	1	HOSE ASSY
58	9108-3306	1	STRAIGHT THREAD CONNECTOR
59	8859-1206	1	O-RING
60	8866-2224	1	SWIVEL NUT BRANCH TEE, 3/8 TUBE
61	8866-2103	1	ELBOW, 90 DEGREES (swivel nut)
62	9104-3163	1	TUBE ASSY
63	7713-3089	1	TEST FITTING
64	8866-2105	2	ELBOW, 90 DEGREES (swivel nut)
65	8471-8208	1	HOSE ASSY
66	9002-7187	12	NYLON TIE
67	8820-1018	2	HEX HD CAPSCREW, 5/16-18X3/4, GR5
68	8856-1108	4	WASHER
69	9130-3049	2	HOSE SUPPPORT (one each side)
70	8850-1005	2	HEX NUT
71	8471-8181	1	HOSE ASSY
* 72	9002-3155	2	O-RING (one each side)

** Added item 72.*

HYDRAULIC CIRCUITS
Lift Cylinder
Starting Serial No. 0188002
Original Issue 1-90
Revised 10-18-95

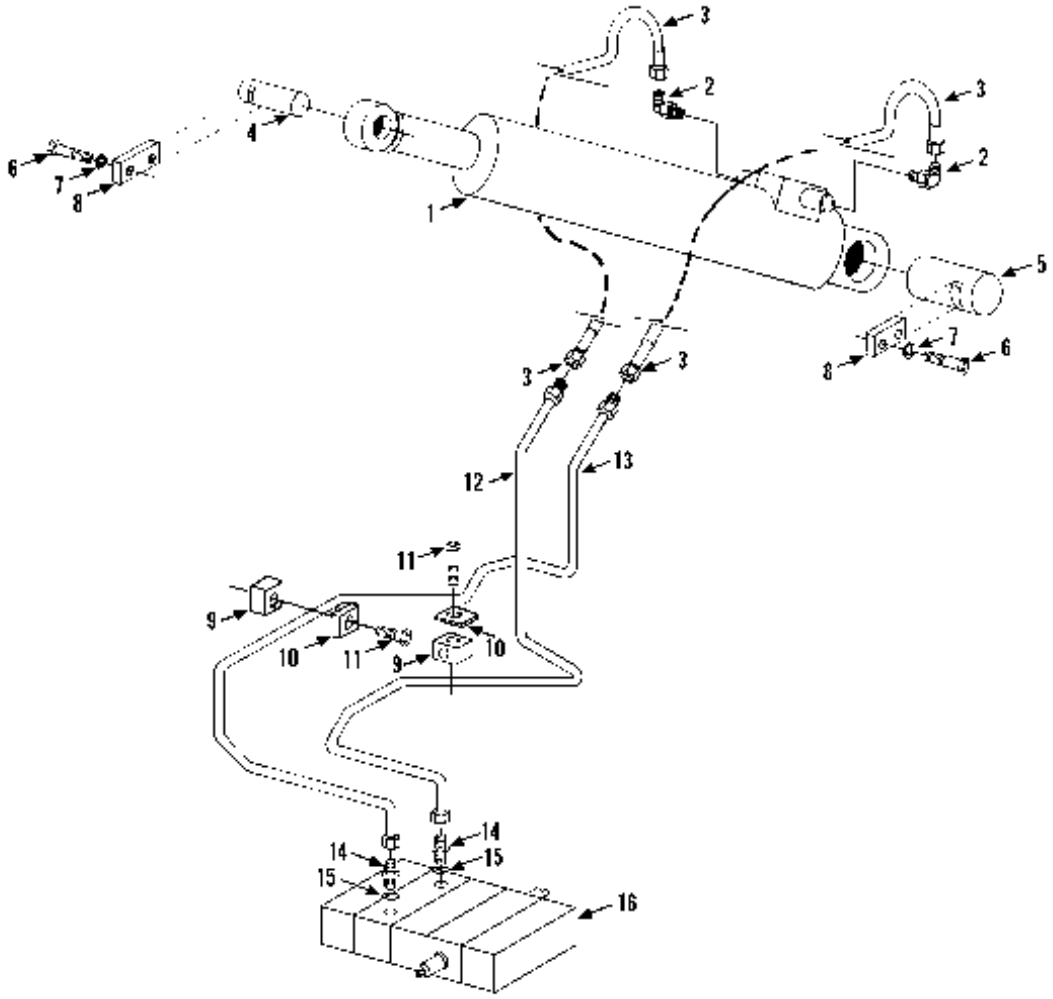

Item	Part No.	Qty.	Description Of Part
* 1		Ref	LIFT CYLINDER ASSY (see page 10-1 for details)
2	9108-3050	2	HYDRAULIC SWIVEL
3	8471-7860	2	HOSE ASSY
4	9108-1432	1	PIN
5	9108-1433	1	PIN
* 6	8820-1065	4	HEX HD CAPSCREW, 1/2-13X1, GR5
* 7	8855-1013	4	LOCKWASHER, 1/2
* 8	9108-1313	4	KEEPER PLATE

Item	Part No.	Qty.	Description Of Part
* 9	7713-3139	2	CLAMP SET
10	7713-3140	2	COVER PLATE
11	7713-3177	2	HEX HD CAPSCREW
12	9112-3004	1	TUBE ASSY
13	9112-3003	1	TUBE ASSY
14	8866-2007	2	CONNECTOR (includes item 15)
15	8859-1206	2	O-RING
*16		Ref	MAIN HYDRAULIC CONTROL VALVE - 534C-6 (see page 10-9 for details)

** Removed part number and reference to designated page on items 1 & 16. Changed quantities on items 6 thru 9, removed item 17.*

HYDRAULIC CIRCUITS
Crowd Cylinder
Starting Serial No. 0188002
Original Issue 1-90
Revised 10-19-95

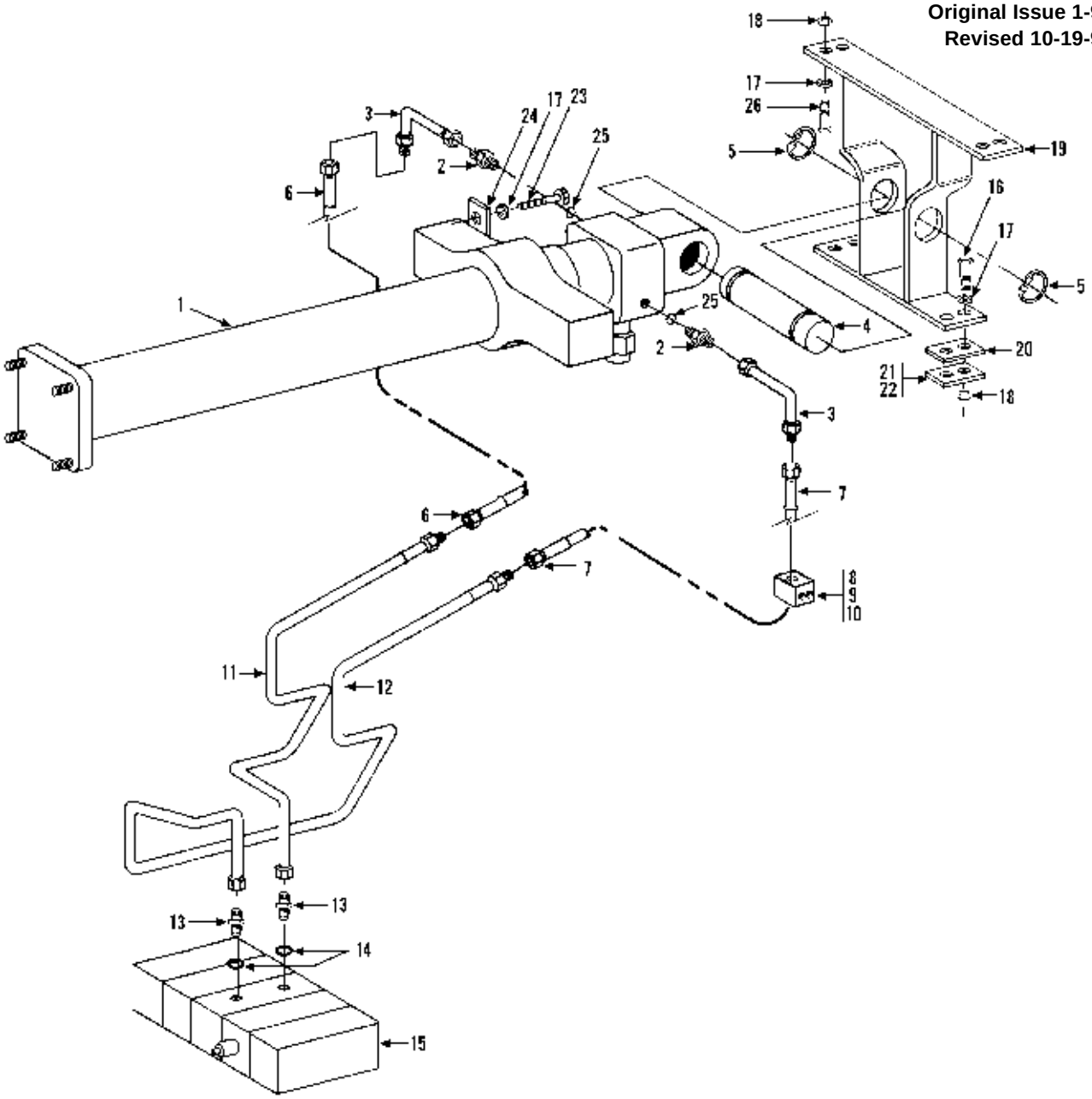

Item	Part No.	Qty.	Description Of Part
1		Ref	CROWD CYLINDER ASSY (see page 10-2 for details)
2	8656-1308	2	STR. THREAD ADAPTER (includes item 25)
3	9112-3022	2	LONG ADAPTER, 90 DEGREES
4	9112-1041	1	PIN
5	8858-1320	2	RETAINING RING
6	8471-7863	1	HOSE ASSY
7	8471-7862	1	HOSE ASSY
* 8	7713-3893	2	STAUFF CLAMP SET
* 9	7713-3052	2	STAUFF COVER PLATE
*10	7713-3209	4	HEX HD CAPSCREW, 1/4-20x1-3/8
11	9112-3005	1	TUBE ASSY
12	9112-3008	1	TUBE ASSY
13	8866-2007	2	CONNECTOR (includes item 14)
14	8859-1206	2	O-RING

Item	Part No.	Qty.	Description Of Part
15		Ref	MAIN CONTROL VALVE (see page 10-9 for details)
*16	8320-1039	4	HEX HD CAPSCREW, 3/4-10X2-1/2, GR8 (torque to 340-365 ft.lbs.)
17	9002-7473	12	HARDENED WASHER
18	8850-1012	8	HEX NUT
19	9112-6010	1	CROWD CYLINDER MOUNTING BRACKET
20	9112-1023	AR	SHIM (.0598")
21	9112-1024	AR	SHIM (.0359")
22	9112-1157	AR	SHIM (.134")
*23	8320-1017	4	HEX HD CAPSCREW, 3/4-10X2-3/4, GR8 (torque to 340-365 ft.lbs.)
24	9112-1066	2	CROWD CYLINDER RETAINER
*25	8859-1205	2	O-RING
*26	8320-1038	4	HEX HD CAPSCREW, 3/4-10X2-1/4, GR8 (torque to 340-365 ft.lbs.)

* *Changed quantity on items 8, 9, 10 & 16, added torque notes and items 25 & 26.*

HYDRAULIC CIRCUITS
Tilt & Tilt Compensating Cylinder
Starting Serial No. 0188002
Original Issue 1-90
Revised 4-2-97

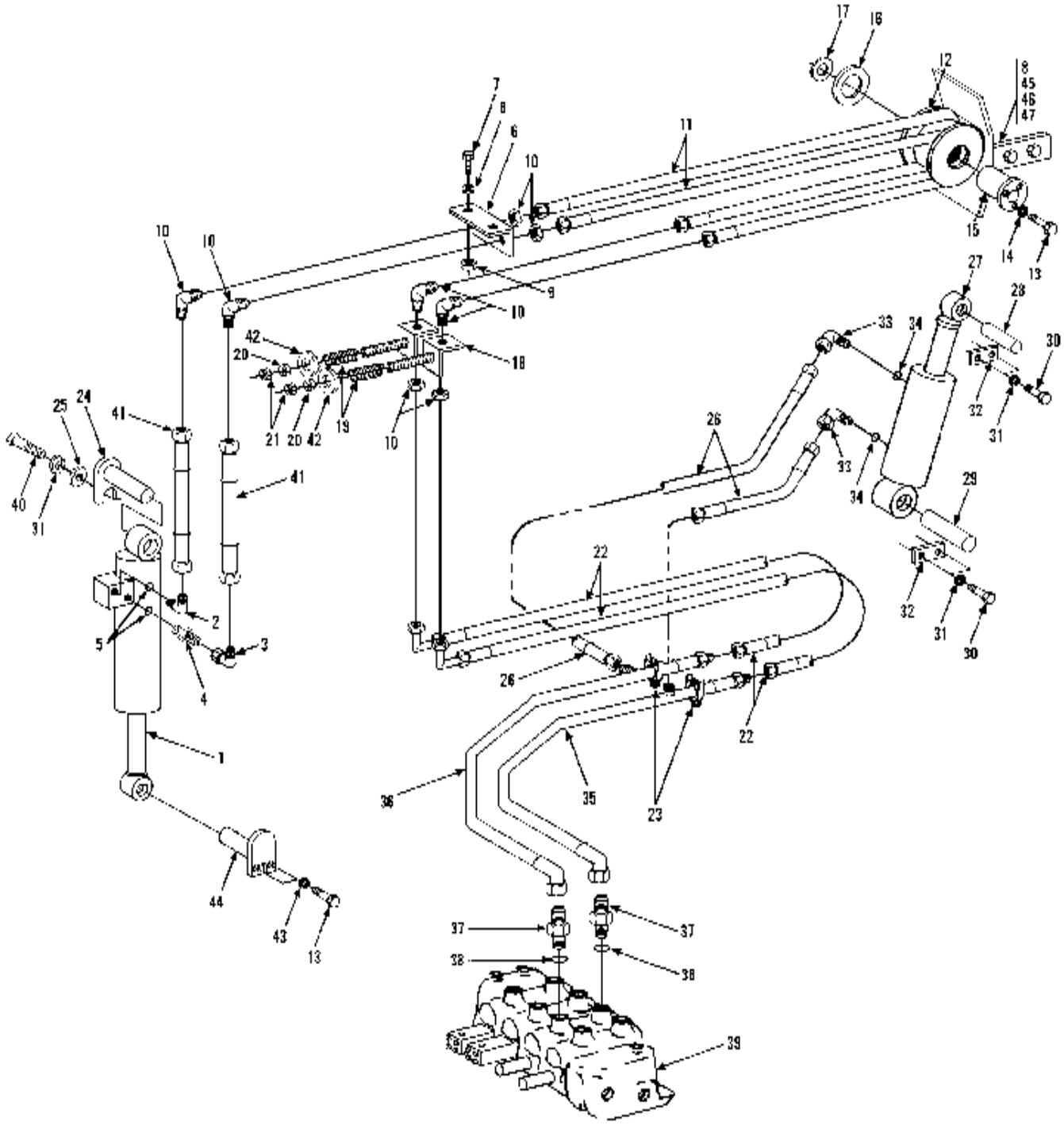

* *Changed quantity on items 8 & 13, added items 43 thru 47.*

Item	Part No.	Qty.	Description Of Part
1		Ref	TILT CYLINDER ASSY - 534 (see page 10-3 for details)
		Ref	TILT CYLINDER ASSY - 532 (see page 10-4 for details)
2	9105-3450	1	STRAIGHT THREAD FITTING (includes item 5)
3	8866-2105	1	ELBOW, 90 DEGREES (swivel nut)
4	9105-3426	1	STRAIGHT THREAD CONNECTOR (includes item 5)
5	8859-1207	2	O-RING
6	9112-1125	1	BULKHEAD BRACKET
7	8820-1020	2	HEX HD CAPSCREW, 5/16-18X1, GR5
* 8	8855-1010	4	LOCKWASHER, 5/16
9	8850-1005	2	HEX NUT, 5/16-18
10	9002-7179	4	BULKHEAD FITTING
11	8471-7895	2	HOSE ASSY
12	9112-3016	1	HOSE SHEAVE
*13	8320-1123	5	HEX HD CAPSCREW, 1/2-13X1, GR8
14	9002-7471	3	FLAT WASHER
15	9108-1326	1	HOSE REEL SUPPORT
16	9020-3040	1	THRUST WASHER
17	8858-1320	1	RETAINING RING (external)
18	9112-6008	2	HOSE TAKE-UP WELDMENT
19	9112-3054	2	SPRING
20	8850-1008	2	HEX NUT, 1/2-13
21	8850-1108	2	HEAVY HEX JAM NUT, 1/2-13
22	8471-7894	2	HOSE ASSY
23	9020-7463	8	CLAMP
24	9114-6052	1	PIN

Item	Part No.	Qty.	Description Of Part
25	8362-1283	1	WASHER
26	8471-7859	2	HOSE ASSY
27		1	COMPENSATING CYLINDER - 534 (see page 10-5 for details)
		1	COMPENSATING CYLINDER - 532 (see page 10-6 for details)
28	9108-1432	1	PIN
29	9108-1433	1	PIN
30	8820-1065	4	HEX HD CAPSCREW 1/2-13X1, GR5
31	8855-1013	5	LOCKWASHER, 1/2
32	9108-1313	2	KEEPER PLATE
33	8866-2065	2	ELBOW, 90 DEGREES (includes item 34)
34	8859-1205	2	O-RING
35	9112-3006	1	TUBE ASSY
36	9112-3087	1	TUBE ASSY
37	8866-2019	2	CONNECTOR (includes item 38)
38	8859-1206	2	O-RING
39		Ref	MAIN HYDRAULIC CONTROL VALVE (see page 10-9 for details)
40	8820-1065	1	HEX HD CAPSCREW, 1/2-12X1", GR5
41	8471-7896	2	HOSE ASSY
42	9112-1134	2	SPRING RETAINER
*43	8856-1111	2	WASHER, 1/2
*44	9116-6062	1	PIN WELDMENT
*45	9112-6071	1	HOSE GUARD
*46	8820-1034	2	HEX HD CAPSCREW, 3/8-16X7/8, GR5
*47	8856-1109	2	WASHER

* *Changed quantity on items 8 & 13, added items 43 thru 47.*

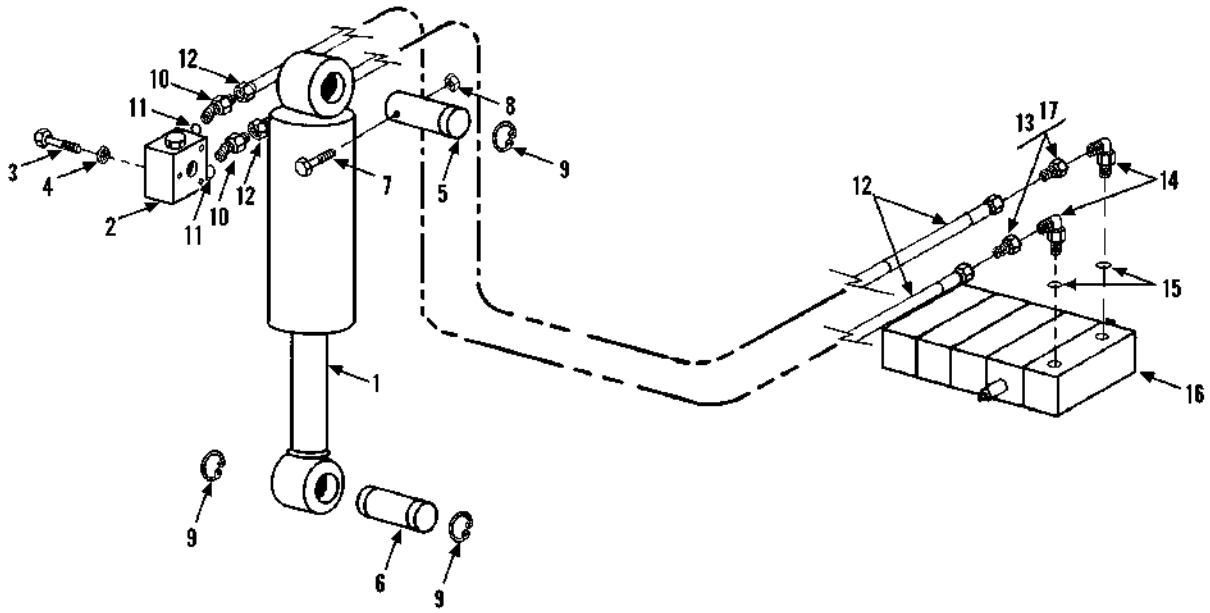

Item	Part No.	Qty.	Description Of Part
1		Ref	SWAY CYLINDER (see page 10-7 for details)
2		Ref	DUAL P.O. CHECK VALVE (see page 10-15 for details)
3	8820-1040	3	HEX HD CAPSCREW, 3/8-16X2-1/4, GR5
4	8855-1011	3	LOCKWASHER, 3/8
5	9108-1396	1	PIN
6	9020-7352	1	PIN
7	8820-1104	1	HEX HD CAPSCREW, 5/8-11X3-3/4, GR5
8	8850-1010	1	HEX NUT, 5/8-11
* 9	9002-8935	3	RETAINING RING
10	8866-2082	2	ELBOW, 45 DEGREES (includes item 11)
11	8859-1202	2	O-RING
12	8471-7861	2	HOSE ASSY
13	8866-1341	2	TUBE-END REDUCER, 1/2x1/4
14	8866-2059	2	ADAPTER, 90 DEGREES, 5/8-1/2 (includes item 15)
15	8859-1206	2	O-RING
16		Ref	MAIN HYDRAULIC CONTROL VALVE (see page 10-9 for details)
17	8866-1406	2	NUT

** Changed quantity on item 9.*

HYDRAULIC CIRCUITS
Sway Cylinder
Starting Serial No. 0388247
Original Issue 3-96
Revised 4-2-97

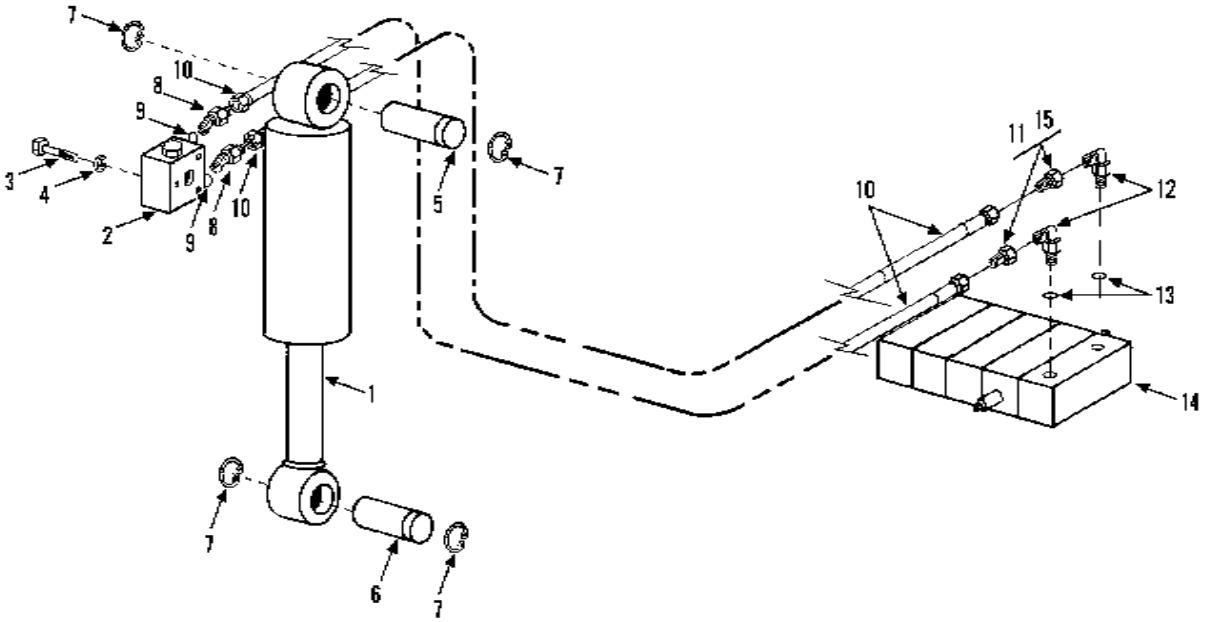

Item	Part No.	Qty.	Description Of Part
1		Ref	SWAY CYLINDER - IOWA (see page 10-7 for details)
2		Ref	DUAL P.O. CHECK VALVE (see page 10-15 for details)
3	8820-1040	3	HEX HD CAPSCREW, 3/8-16X2-1/4, GR5
4	8855-1011	3	LOCKWASHER, 3/8
5	9114-1316	1	PIN
6	9020-7352	1	PIN
7	9002-8935	4	RETAINING RING
* 8	8866-2082	2	ELBOW, 45 DEGREES (includes item 9)
9	8859-1202	2	O-RING
10	8471-7861	2	HOSE ASSY
11	8866-1341	2	TUBE-END REDUCER, 1/2x1/4
12	8866-2059	2	ADAPTER, 90 DEGREES, 5/8-1/2 (includes item 13)
13	8859-1206	2	O-RING
14		Ref	MAIN HYDRAULIC CONTROL VALVE (see page 10-9 for details)
15	8866-1406	2	NUT (used with item 11)

* *Changed part numbers on item 8.*

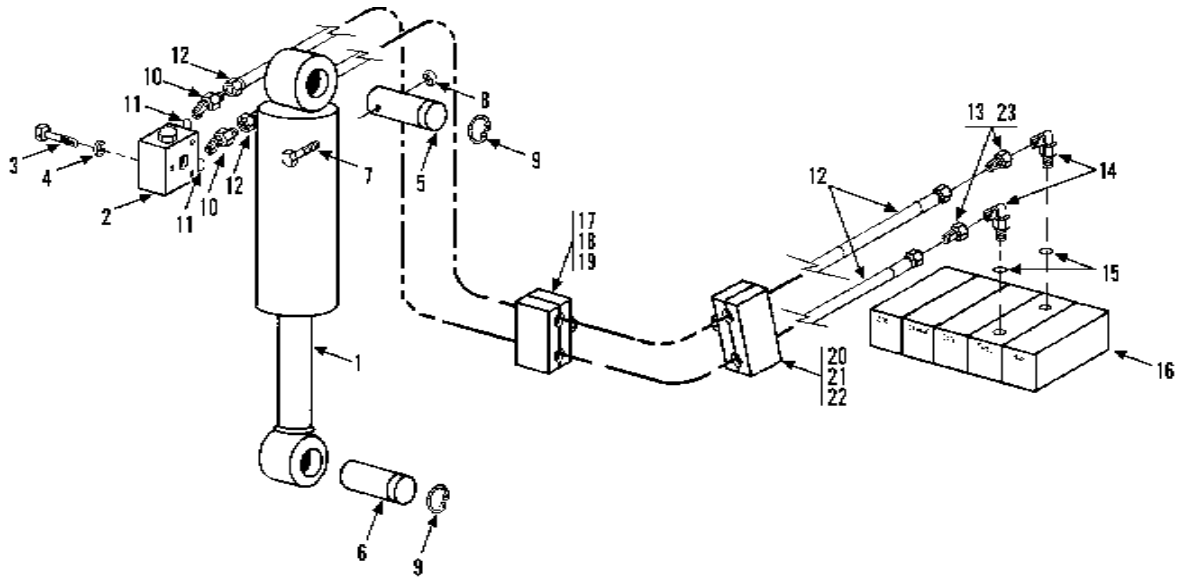

Item	Part No.	Qty.	Description Of Part
1		Ref	SWAY CYLINDER - IOWA (see page 10-7 for details)
2		Ref	DUAL P.O. CHECK VALVE, (see page 10-15 for details)
3	8820-1040	3	HEX HD CAPSCREW, 3/8-16X2-1/4, GR5
4	8855-1011	3	LOCKWASHER, 3/8
5	9108-1396	1	PIN
6	9020-7352	1	PIN
7	8820-1104	1	HEX HD CAPSCREW, 5/8-11X3-3/4, GR5
8	8850-1010	1	HEX NUT, 5/8-11
9	9002-8935	2	RETAINING RING
*10	8866-2082	2	ELBOW, 45 DEGREES (includes item 11)
11	8859-1202	2	O-RING
12	8471-8645	2	HOSE ASSY
13	8866-1341	2	TUBE-END REDUCER, (1/2x1/4)
14	8866-2059	2	ADAPTER, 90 DEGREES, 5/8-1/2 (includes item 15)
15	8859-1206	2	O-RING
16		Ref	MAIN HYDRAULIC CONTROL VALVE (see page 10-9 S/N 0288568 for details)
17	7713-3139	4	CLAMP SET
18	7713-3140	4	COVER PLATE
19	7713-3177	4	HEX BOLT, 5/16X1-3/8
20	7713-3279	2	CLAMP SET
21	7713-3137	2	COVER PLATE
22	8820-1023	2	HEX BOLT, 5/16X1-3/4
23	8866-1406	2	NUT (used with item 13)

* *Changed part number on item 10.*

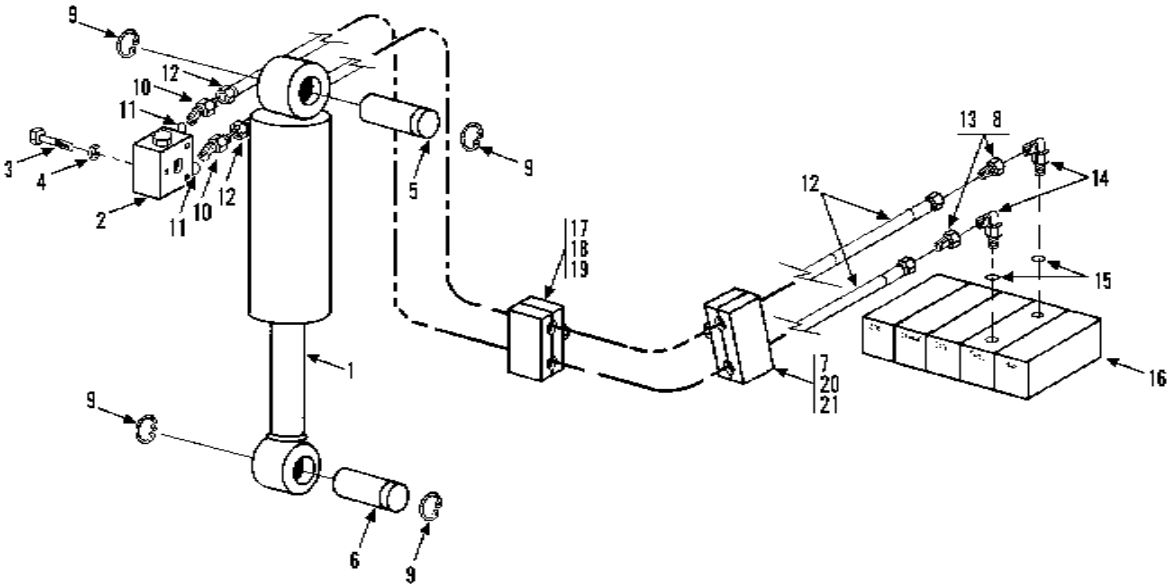

Item	Part No.	Qty.	Description Of Part
1		Ref	SWAY CYLINDER - IOWA (see page 10-7 for details)
2		Ref	DUAL P.O. CHECK VALVE, (see page 10-15 for details)
3	8820-1040	3	HEX HD CAPSCREW, 3/8-16X2-1/4, GR5
4	8855-1011	3	LOCKWASHER, 3/8
5	9114-1316	1	PIN
6	9020-7352	1	PIN
7	8820-1023	2	HEX BOLT, 5/16X1-3/4
8	8866-1406	2	NUT (used with item 13)
9	9002-8935	4	RETAINING RING
*10	8866-2082	2	CONNECTOR, (includes item 11)
11	8859-1202	2	O-RING
12	8471-8645	2	HOSE ASSY
13	8866-1341	2	TUBE-END REDUCER, (1/2x1/4)
14	8866-2059	2	ADAPTER, 90 DEGREES, 5/8-1/2 (includes item 15)
15	8859-1206	2	O-RING
16		Ref	MAIN HYDRAULIC CONTROL VALVE (see page 10-9 for details)
17	7713-3139	4	CLAMP SET
18	7713-3140	4	COVER PLATE
19	7713-3177	4	HEX BOLT, 5/16X1-3/8
20	7713-3279	2	CLAMP SET
21	7713-3137	2	COVER PLATE

* *Changed part number on item 10.*

HYDRAULIC CIRCUITS
Steering Cylinder
Starting Serial No. 0188002
Original Issue 1-90
Revised 10-19-95

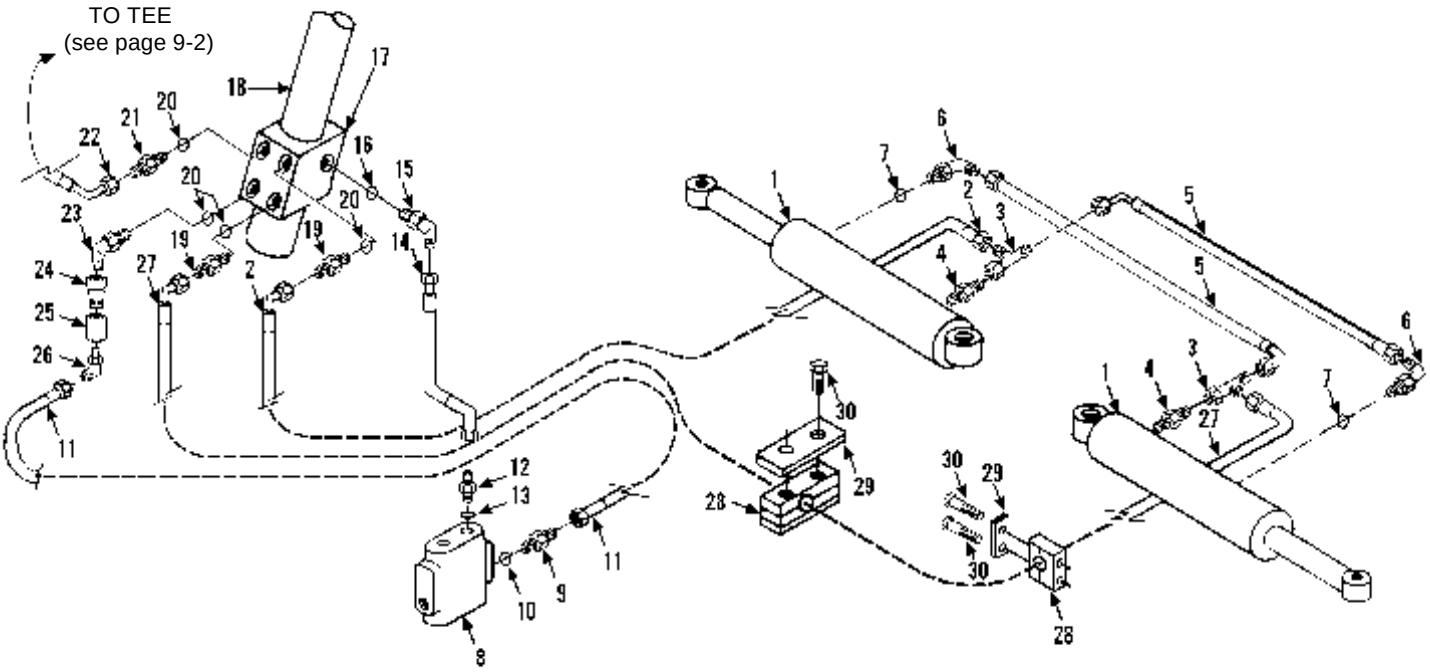

Item	Part No.	Qty.	Description Of Part
1		Ref	STEERING CYLINDER (see page 10-8 for details)
2	8471-8203	1	HOSE ASSY
3	8866-2240	2	SWIVEL NUT RUN TEE, 1/2 TUBE
4	8866-2026	2	CONNECTOR (includes o-ring)
	8859-1015	2	O-RING
5	8471-8202	2	HOSE ASSY
6	8866-2064	2	ELBOW, 90 DEGREES (includes item 7)
7	8859-1204	2	O-RING
8		Ref	PRIORITY FLOW CONTROL VALVE, (see page 10-11 for details)
9	8866-2019	1	CONNECTOR (includes item 10)
10	8859-1206	1	O-RING
11	8471-7854	1	HOSE ASSY
12	8866-2003	1	CONNECTOR, (includes item 13)
13	8859-1202	1	O-RING
14	8471-7858	1	HOSE ASSY
15	8866-2062	1	ELBOW, 90 DEGREES, (includes item 16)

Item	Part No.	Qty.	Description Of Part
16	8859-1202	1	O-RING
17		Ref	STEERING ORBITROL (see page 10-23 S/N 0188002 for details)
*18		Ref	STEERING COLUMN (see page 7-4 for details)
19	8866-2006	2	CONNECTOR (includes item 20)
20	8859-1205	5	O-RING
21	8866-2018	1	CONNECTOR (includes item 20)
22	8471-7810	1	HOSE ASSY
23	8866-2065	1	ELBOW, 90 DEGREES (includes item 20)
24	9108-3335	1	STR. THREAD ADAPTER
25	9020-2926	1	CHECK VALVE
26	8866-2065	1	ELBOW, 90 DEGREES (includes item 20)
27	8471-8204	1	HOSE ASSY
*28	7713-3073	2	CLAMP SET
*29	7713-3052	2	COVER PLATE
*30	7713-3209	4	HEX HD CAPSCREW, 1/4-20X1-3/8

** Removed part number on item 18, reference page 7-4 for details. Changed quantities on items 28 thru 30 and removed items 31 & 32.*

HYDRAULIC CIRCUITS
Steering Cylinder
Starting Serial No. 0288032
Original Issue 10-95

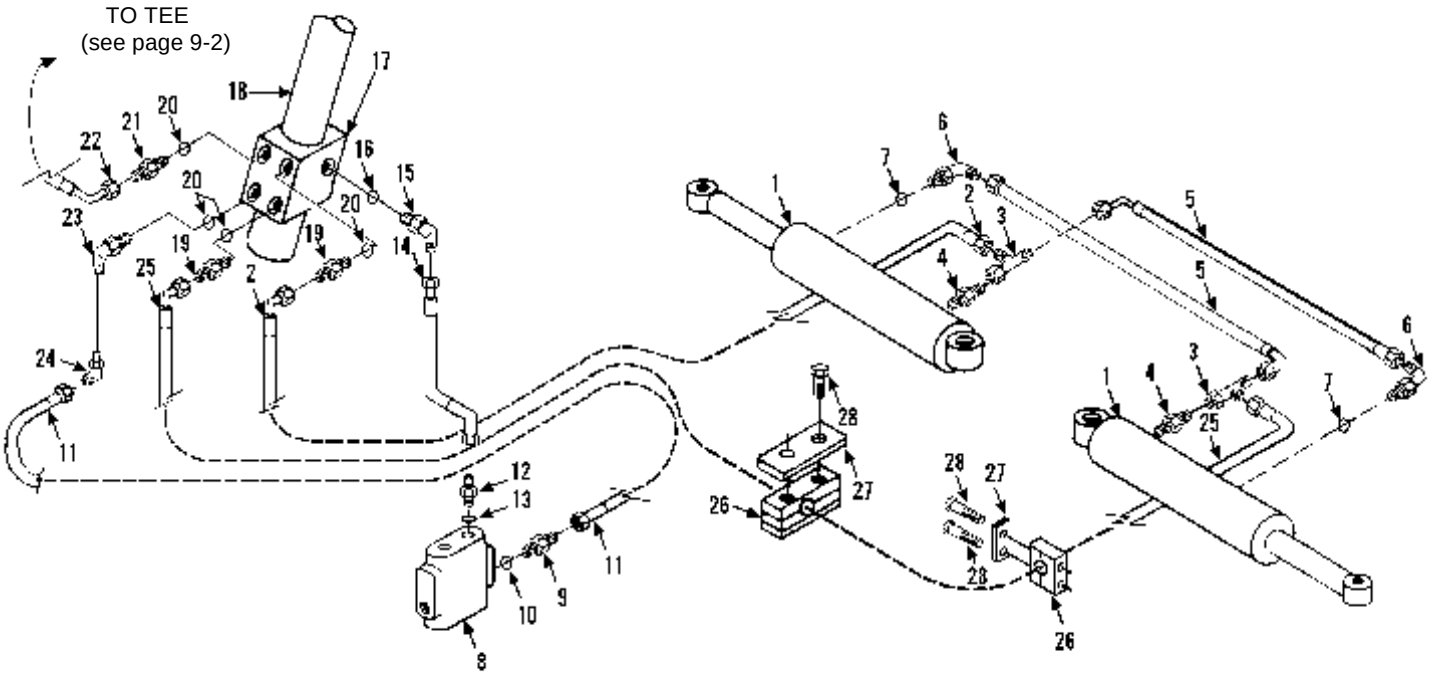

Item	Part No.	Qty.	Description Of Part
1		Ref	STEERING CYLINDER (see page 10-8 for details)
2	8471-8203	1	HOSE ASSY
3	8866-2240	2	SWIVEL NUT RUN TEE, 1/2 TUBE
4	8866-2026	2	CONNECTOR (includes o-ring)
	8859-1015	2	O-RING
5	8471-8202	2	HOSE ASSY
6	8866-2064	2	ELBOW, 90 DEGREES (includes item 7)
7	8859-1204	2	O-RING
8		Ref	PRIORITY FLOW CONTROL VALVE, (see page 10-11 for details)
9	8866-2019	1	CONNECTOR (includes item 10)
10	8859-1206	1	O-RING
11	8471-7854	1	HOSE ASSY
12	8866-2003	1	CONNECTOR, (includes item 13)
13	8859-1202	1	O-RING
14	8471-7858	1	HOSE ASSY

Item	Part No.	Qty.	Description Of Part
15	8866-2062	1	ELBOW, 90 DEGREES, (includes item 16)
16	8859-1202	1	O-RING
17		Ref	STEERING ORBITROL (see page 10-23 S/N 0288032 for details)
18		Ref	STEERING COLUMN (see page 7-4 for details)
19	8866-2006	2	CONNECTOR (includes item 20)
20	8859-1205	5	O-RING
21	8866-2018	1	CONNECTOR (includes item 20)
22	8471-7810	1	HOSE ASSY
23	8866-2065	1	ELBOW, 90 DEGREES (includes item 20)
24	8866-2065	1	ELBOW, 90 DEGREES (includes item 20)
25	8471-8204	1	HOSE ASSY
26	7713-3073	2	CLAMP SET
27	7713-3052	2	COVER PLATE
28	7713-3209	4	HEX HD CAPSCREW, 1/4-20X1-3/8

HYDRAULIC CIRCUITS
Joystick Circuit
Starting Serial No. 0188166
Original Issue 4-93
Revised 10-19-95

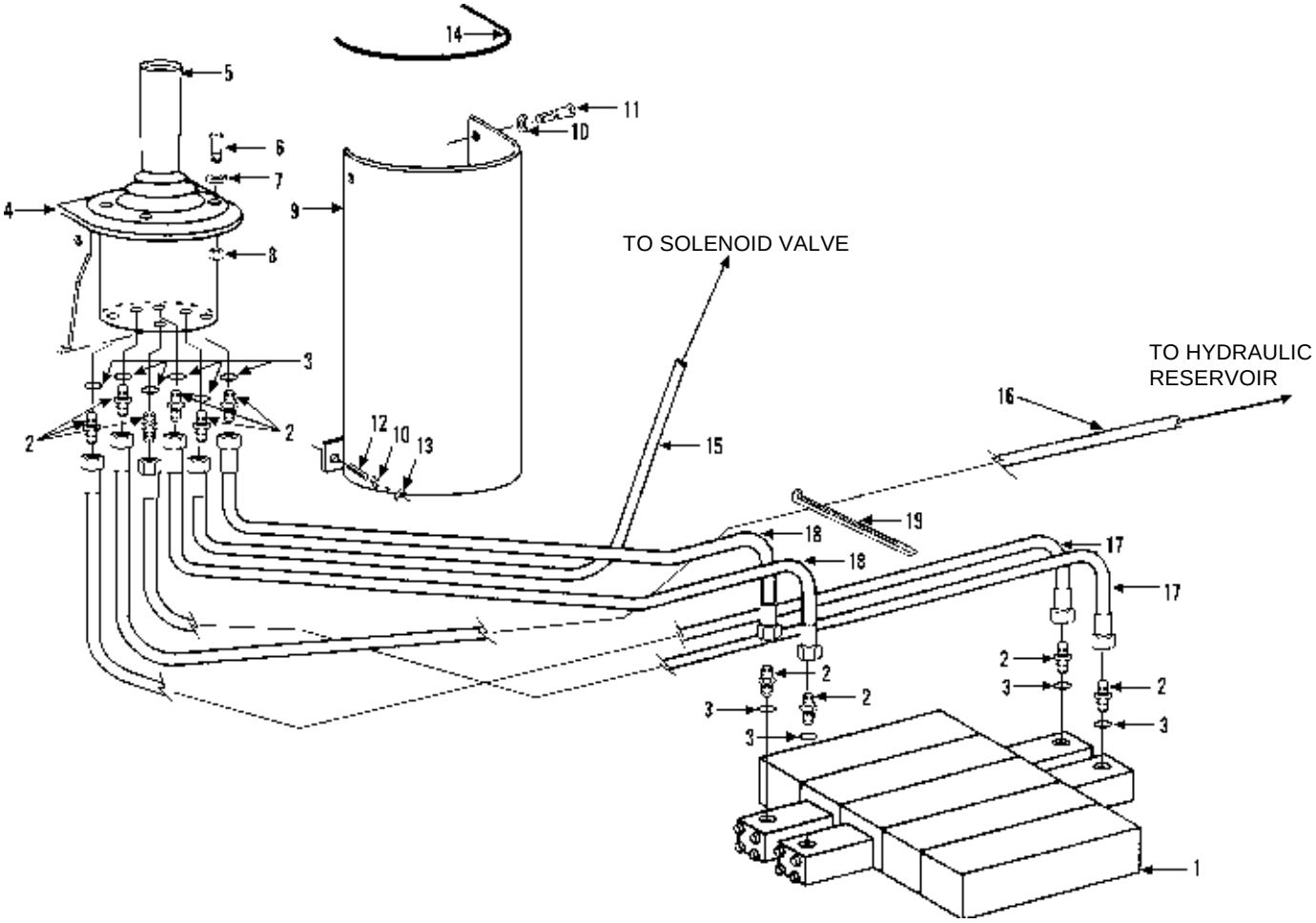

Item	Part No.	Qty.	Description Of Part
1		Ref	MAIN HYDRAULIC CONTROL VALVE ASSY (see page 10-9 for details)
2	8866-2005	10	CONNECTOR (includes item 3)
3	8859-1204	10	O-RING
4	9112-6035	1	JOYSTICK MOUNT WELDMENT
5		Ref	JOYSTICK (see page 10-24 for details)
6	8826-1017	4	SOCKET BUTTON HD CAPSCREW, 1/4-20X7/8, GR5
7	8855-1009	4	LOCKWASHER, 1/4
8	8850-1004	4	HEX NUT, 1/4-20

Item	Part No.	Qty.	Description Of Part
9	9104-6056	1	COVER
10	8855-1010	4	LOCKWASHER, 5/16
11	8820-1018	2	HEX HD CAPSCREW, 5/16-18X3/4, GR5
12	8505-1384	2	WELD STUD, 5/16-18
13	8850-1005	2	HEX NUT, 5/16-18
14	9020-6194	AR	TRIM LOK
15	9020-4096	1	HOSE ASSY
16	7713-3197	1	HOSE ASSY
17	8471-7458	2	HOSE ASSY
18	8471-7519	2	HOSE ASSY
19	9002-7187	AR	TIE WRAP

** Changed upper left to designate model more clearly.*

HYDRAULIC CIRCUITS
Joystick Circuit
Starting Serial No. 0288777
Original Issue 4-93
Revised 10-19-95

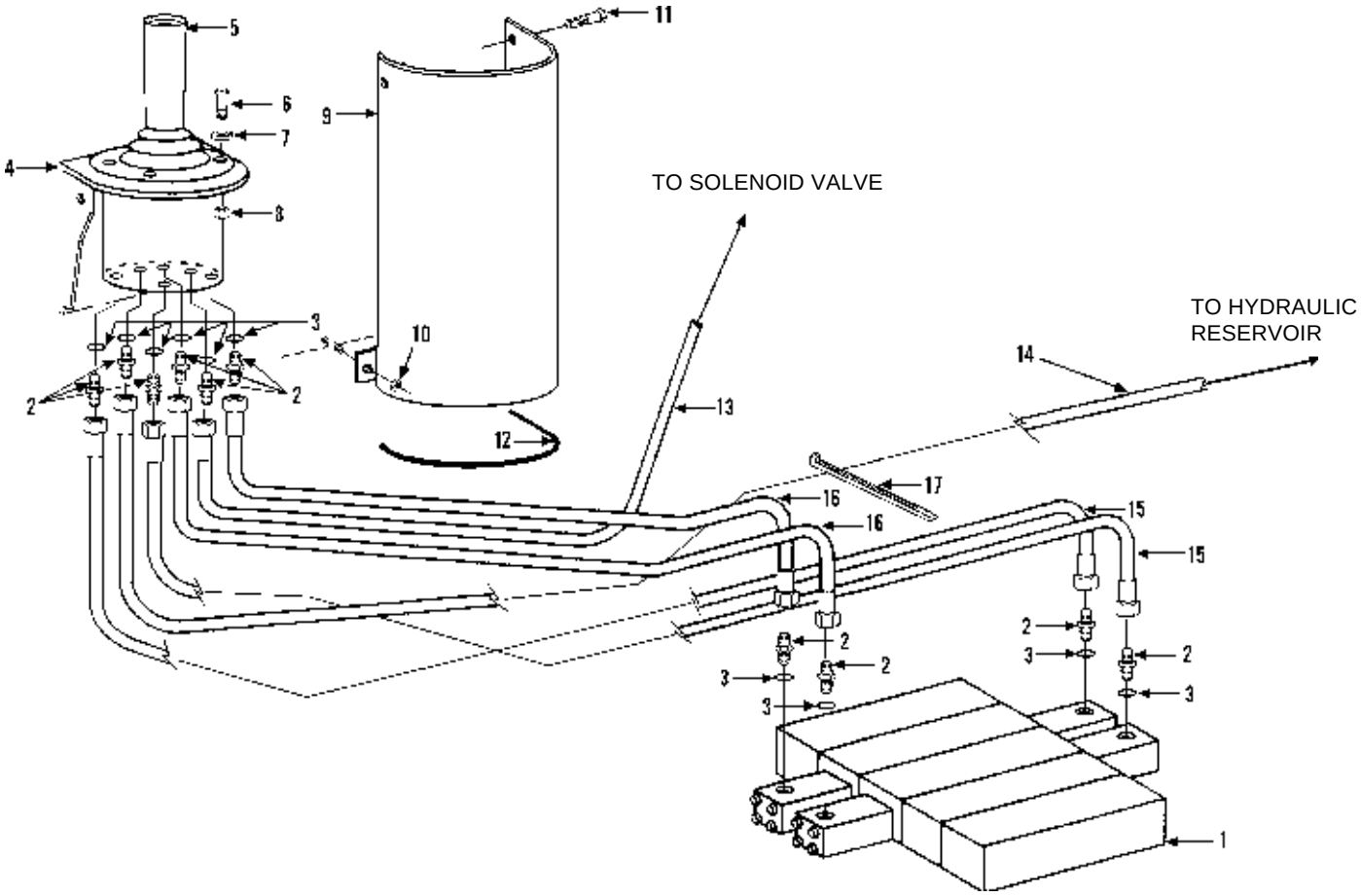

Item	Part No.	Qty.	Description Of Part
1		Ref	MAIN HYDRAULIC CONTROL VALVE ASSY (see page 10-9 for details)
2	8866-2005	10	CONNECTOR (includes item 3)
3	8859-1204	10	O-RING
4	9114-1307	1	JOYSTICK MOUNT WELDMENT
5		Ref	JOYSTICK (see page 10-24 for details)
6	8826-1017	4	SOCKET BUTTON HD CAPSCREW, 1/4-20X7/8, GR5
7	8855-1009	4	LOCKWASHER, 1/4

Item	Part No.	Qty.	Description Of Part
8	8850-1004	4	HEX NUT, 1/4-20
9	9114-6047	1	COVER
10	7714-3006	2	WHIZ LOCKNUT, 5/16-18
11	7714-3003	2	WHIZ-LOC SCREW, 5/16-18X5/8
12	9020-6194	AR	TRIM LOK
13	9020-4096	1	HOSE ASSY
14	7713-3197	1	HOSE ASSY
15	8471-7458	2	HOSE ASSY
16	8471-7519	2	HOSE ASSY
17	9002-7187	AR	TIE WRAP

NOTE: MACHINES WITH S/N'S THAT END IN (H) WILL HAVE IOWA CYLINDERS, UNLESS OTHERWISE NOTED.

HYDRAULIC COMPONENTS
(9112-3010) Lift Cylinder - Seitz

Starting Serial No. 0188002 Thru 0288586, 0288588 Thru 0288691, 0288693, 0288694, & 0288716 Thru 0288939, * 0388021 thru 0388087
Original Issue 1-90
Revised 10-20-95

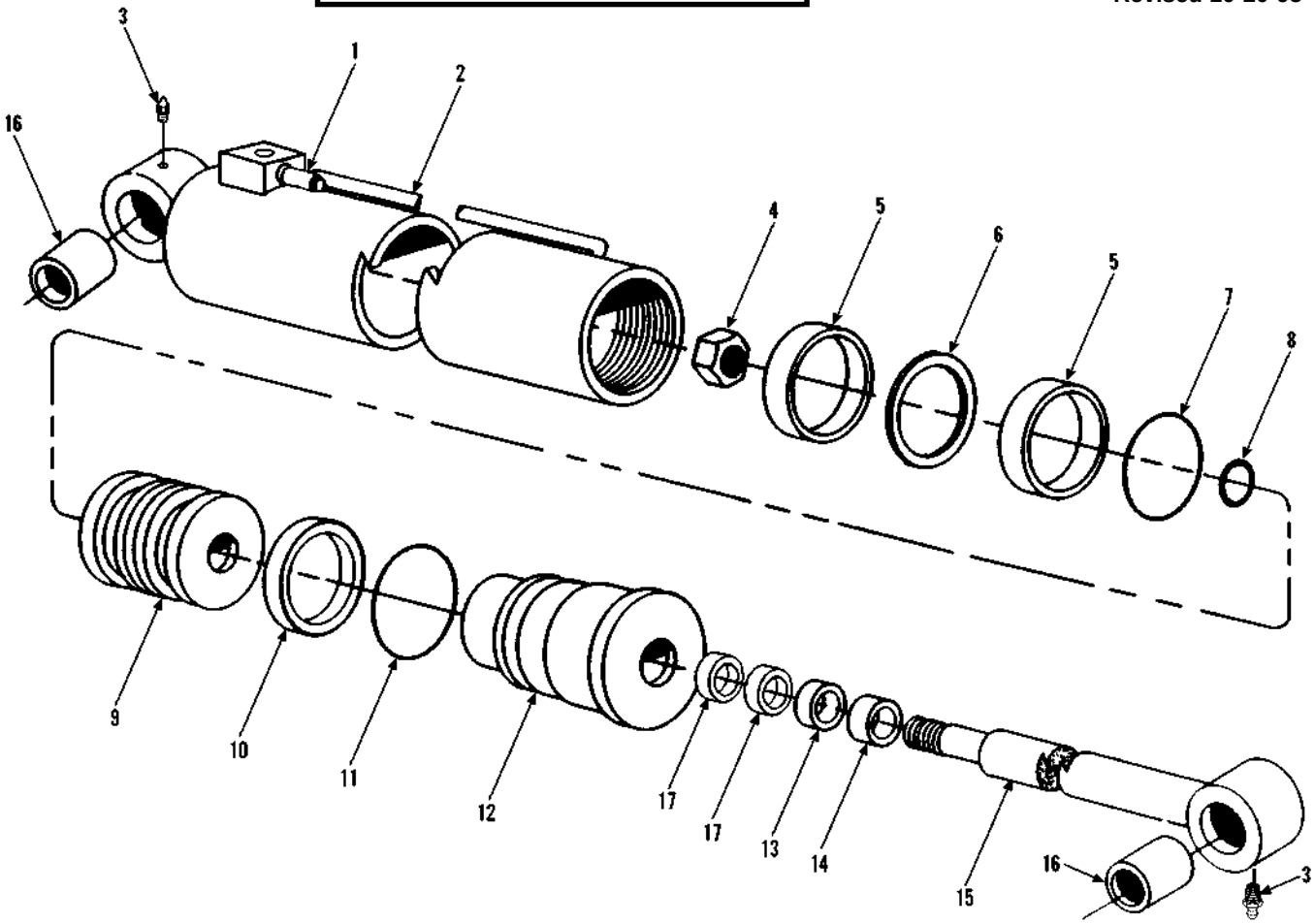

Item	Part No.	Qty.	Description Of Part
	9112-3010	1	LIFT CYLINDER ASSY (includes all items)
	9112-4036	1	SEAL KIT (includes items 5, 6, 7, 8, 10, 11, 13, 14 & 17)
1	9103-3430	1	COUNTERBALANCE VALVE
2	9112-4032	1	TUBE ASSY
3	8867-1033	2	LUBE FITTING, STRAIGHT, 1/4-28
4	9103-4280	1	NUT (lubricate & torque 940 ft.lbs.)
5		2	WEAR RING
6		1	SEAL
7		1	O-RING
8		1	O-RING
9	9112-4033	1	PISTON
10		1	BACK-UP RING
11		1	O-RING
12	9112-4035	1	GLAND
13		1	SEAL
14		1	WIPER
15	9112-4034	1	ROD ASSY
16	9108-4167	4	BUSHING
17		2	WEAR RING
			NOTE: ONLY ITEMS WITH PART NUMBERS ARE AVAILABLE FOR SERVICE.

** Changed S/N listings.*

NOTE: MACHINES WITH S/N'S THAT END IN (H) WILL HAVE IOWA CYLINDERS, UNLESS OTHERWISE NOTED.

HYDRAULIC COMPONENTS
(9112-3111) Lift Cylinder - Iowa

Starting Serial No. 0288587, 0288692
0288695 Thru 0288715 &
0288940H Thru 0388020H
*** Starting Serial No. 0388088H -**
Original Issue 7-95
Revised 10-20-95

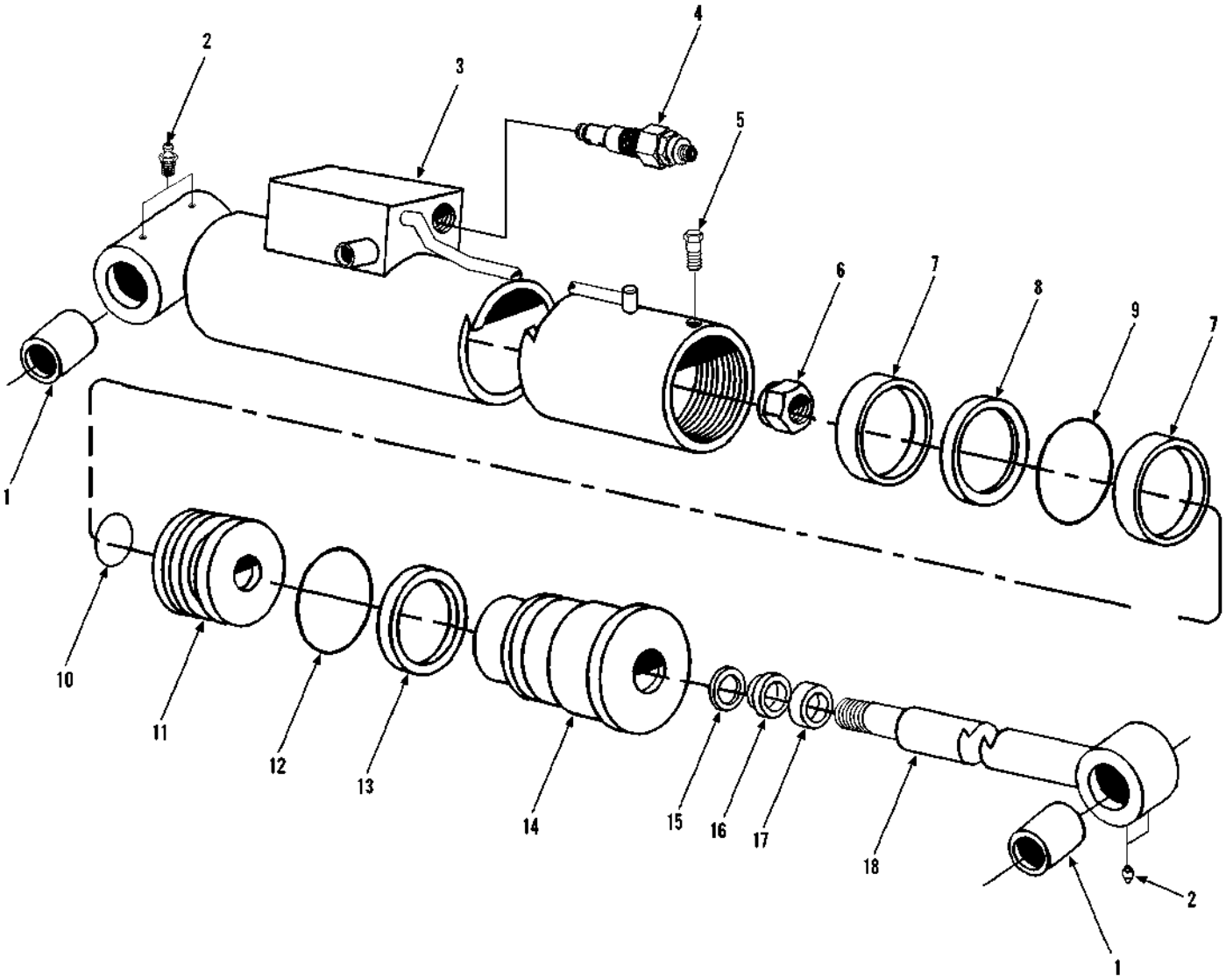

Item	Part No.	Qty.	Description Of Part
	9112-3111	1	LIFT CYLINDER ASSY (includes all items)
	9112-4071	1	SEAL KIT (includes items 7 thru 10, 12, 13 & 15 thru 17)
1	9108-3304	4	BUSHING
2	9114-4128	4	GREASE FITTING
3	9112-4072	1	CASE ASSY
4	9112-3089	1	COUNTERBALANCE VALVE
	9103-4276	1	COUNTERBALANCE VALVE SEAL KIT
5	9114-4017	1	CAPSCREW, #8X32X.375
6	9103-4153	1	LOCKNUT (lubricate & torque to 1400-1500 ft.lbs.)
7		2	WEAR RING
8		1	PISTON SEAL

Item	Part No.	Qty.	Description Of Part
9		1	O-RING
10		1	O-RING
11	9112-4073	1	PISTON
12		1	O-RING
13		1	BACK-UP RING
14	9112-4074	1	CYLINDER HEAD
15		1	STEP SEAL
16		1	U-CUP
17		1	WIPER
18	9112-4075	1	ROD ASSY
			NOTE: ONLY ITEMS WITH PART NUMBERS ARE AVAILABLE FOR SERVICE.

** Changed S/N listings.*

HYDRAULIC COMPONENTS
Crowd Cylinder

Starting Serial No. 0188002
Original Issue 1-90
Revised 8-11-95

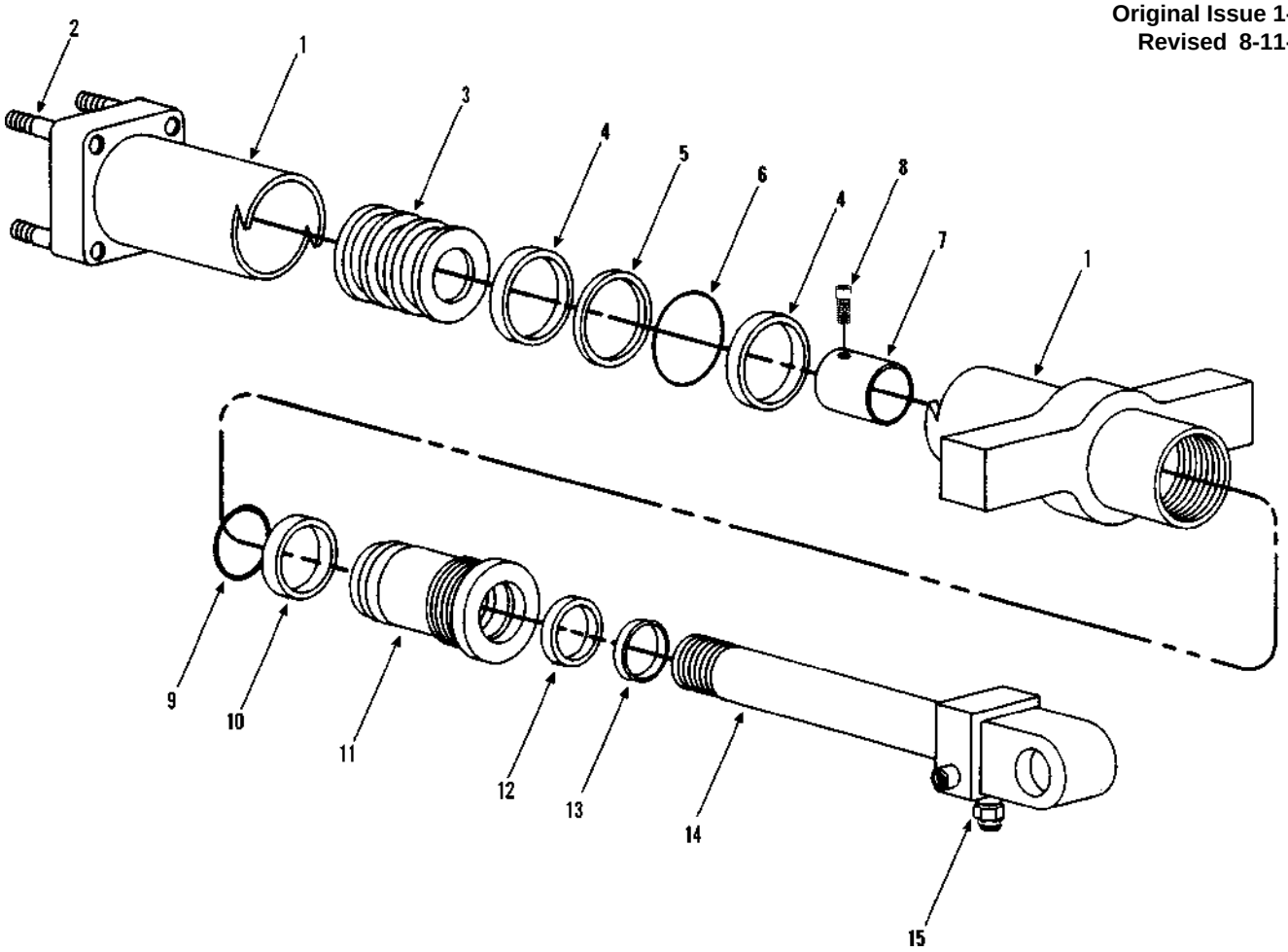

Item	Part No.	Qty.	Description Of Part
	9112-3009	Ref	CROWD CYLINDER ASSY (includes all items)
	9112-4044	1	SEAL KIT (includes items 4, 5, 6, 9, 10, 12 & 13)
1	9112-4040	1	TUBE ASSY
2	9112-4038	1	STUD
3	9112-4037	1	PISTON (torque to 400 ft.lbs.)
4		2	WEAR RING
5		1	SEAL
6		1	O-RING
7	9112-4042	1	STOP TUBE
8	9112-4043	1	SET SCREW
9		1	O-RING
10		1	BACK-UP RING
11	9112-4041	1	GLAND
12		1	BACK-UP RING
13		1	WIPER
14	9112-4039	1	ROD ASSY
15	9103-4308	1	COUNTERBALANCE VALVE
*	9104-4524	1	COUNTERBALANCE VALVE SEAL KIT
			NOTE: ONLY ITEMS WITH PART NUMBERS ARE AVAILABLE FOR SERVICE.

** Added counterbalance valve seal kit*

HYDRAULIC COMPONENTS
(9112-5024) Crowd Cylinder

Starting Serial No. 0188153
Original Issue 3-92
Revised 6-28-99

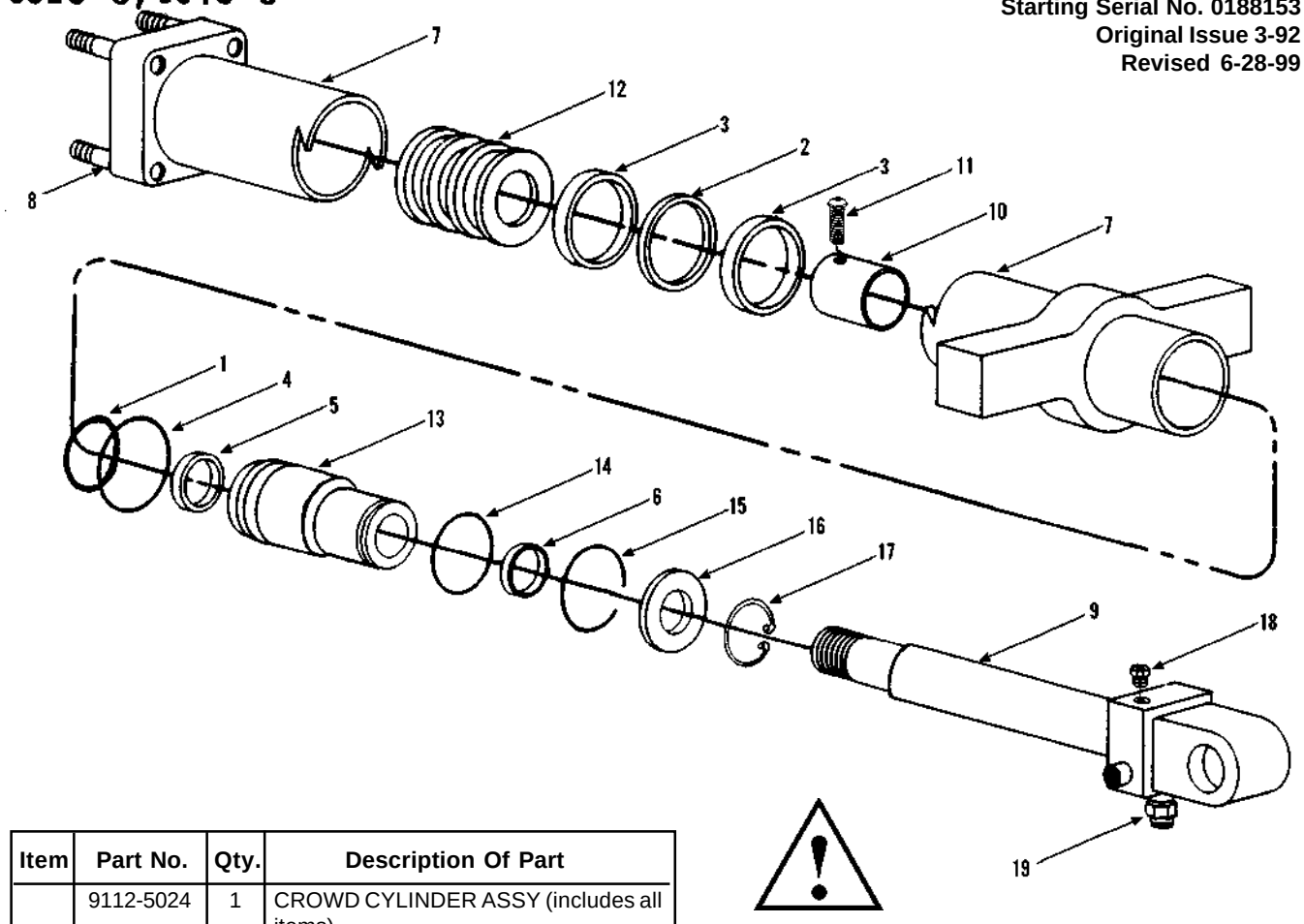

Item	Part No.	Qty.	Description Of Part
	9112-5024	1	CROWD CYLINDER ASSY (includes all items)
	9112-3080	Ref	PACKING KIT (includes items 1 thru 6)
1	8859-1036	1	0-RING
2	9112-3081	1	PISTON SEAL
3	9112-3082	1	PISTON WEAR RING
4	9112-3084	1	STATIC SEAL (old style - starting s/n 0188153 thru 0388517)
	9112-3137	1	STATIC SEAL (new style - starting s/n 0388518)
5	9112-3083	1	ROD SEAL
6	8000-3337	1	ROD WIPER
7	9112-6036	1	TUBE WELDMENT
8	9112-1180	4	STUD
9	9112-6037	1	ROD WELDMENT
10	9112-1178	1	STOP WELDMENT
11	8821-1068	1	SOCKET HD CAPSCREW, 3/8-16X5/8, GR8
12	9112-1176	1	PISTON
13	9112-1171	1	CYLINDER HEAD (old style - starting s/n 0188153 thru 0388517)
	9112-1236	1	CYLINDER HEAD (new style - starting s/n 0388518)
14	9112-3086	1	RETAINING RING
15	8000-3152	12"	NEOPRENE CORD
16	9112-1179	1	SNAP RING WASHER
17	9112-3085	1	SNAP RING
18	8866-2193	1	HEX HD PLUG (includes o-ring)
	8859-1205	1	O-RING
19	9112-3089	1	COUNTERBALANCE VALVE
	9103-4276	1	COUNTERBALANCE VALVE SEAL KIT

SERVICE NOTES:

*** 1) For general maintenance, if customer has old style cylinder head, they must use the old style static seal.**

*** 2) If customer is experiencing problems, it is recommended that a new cylinder head and packing kit be purchased.**

3) Packing kit includes static seals for both old and new style cylinder heads. Be sure to use the correct seals for your application, as they are not interchangeable.

4) Old and new style cylinder heads are interchangeable, but static seals must be ordered according to starting serial numbers.

*** 5) If you are ordering a new complete cylinder, please refer to the next page, Crowd Cylinder (9133-5019).**

* *Changed and added to service notes.*

HYDRAULIC COMPONENTS
(9133-5019) Crowd Cylinder
FOR SERVICE ONLY
Original Issue 6-99

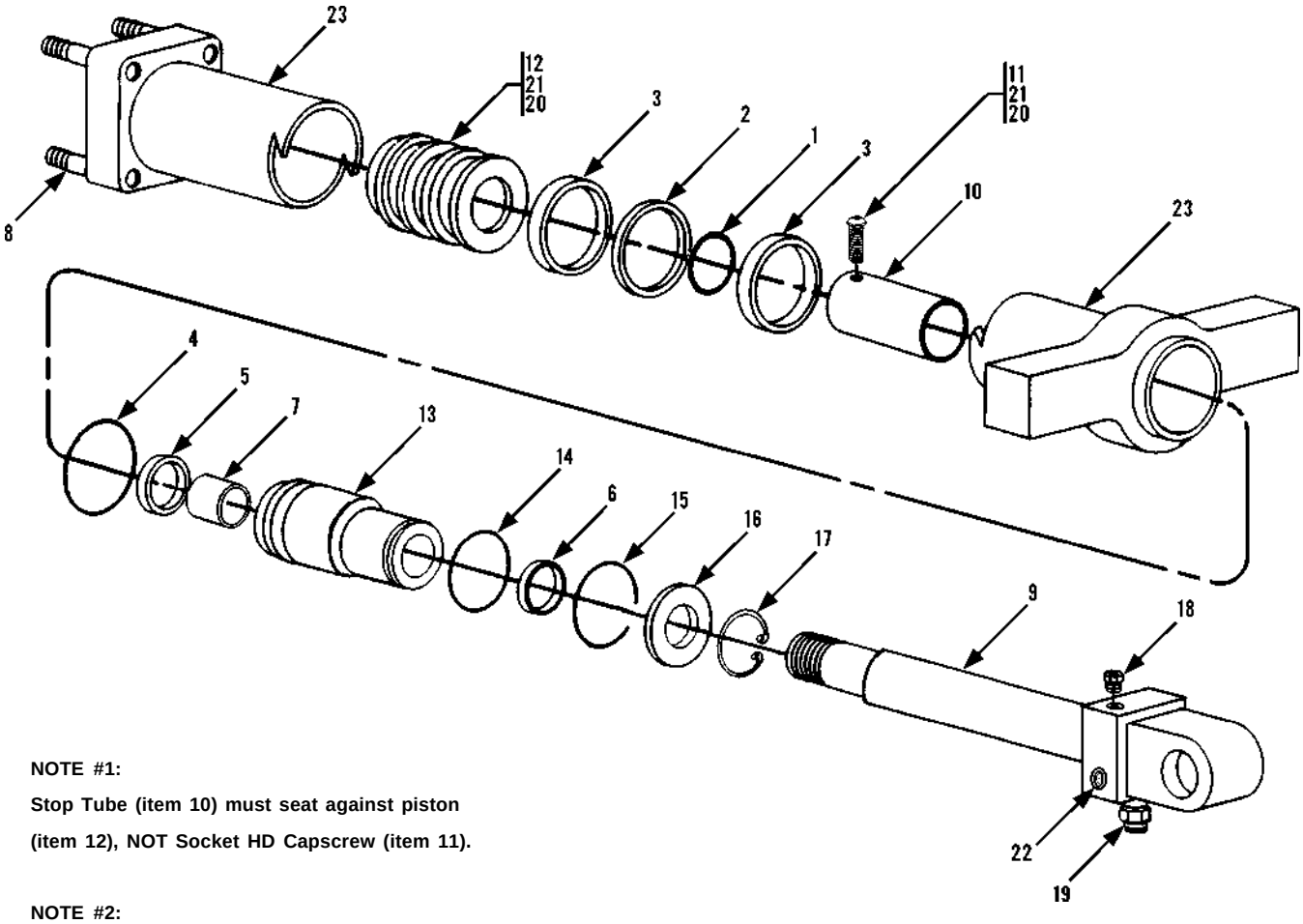

NOTE #1:

Stop Tube (item 10) must seat against piston (item 12), NOT Socket HD Capscrew (item 11).

NOTE #2:

If you are repairing an older cylinder, please refer to the previous page, Crowd Cylinder (9112-5024)

Item	Part No.	Qty.	Description Of Part
	9133-5019	1	CROWD CYLINDER ASSY (includes all items)
	9133-3029	Ref	PACKING KIT (includes items 1 thru 7)
1	8859-1036	1	O-RING
2	9112-3081	1	PISTON SEAL
3	9112-3082	2	PISTON WEAR RING
4	9112-3137	1	STATIC SEAL
5	8000-3082	1	ROD SEAL
6	8000-3337	1	ROD WIPER
7	8000-3227	1	ROD BEARING
8	9112-1180	4	STUD
9	9112-6037	1	ROD WELDMENT
10	9112-1178	1	STOP TUBE
11	8821-1068	1	SOCKET HD CAPSCREW, 3/8-16x5/8, GR8 (hand torque to 40-45 ft. lbs.)
12	9112-1176	1	PISTON (hand torque to 450-475 ft. lbs.)

Item	Part No.	Qty.	Description Of Part
13	9112-1307	1	CYLINDER HEAD
14	9112-3086	1	RETAINING RING
15	8000-3152	12"	NEOPRENE CORD
16	9112-1179	1	SNAP RING WASHER
17	9112-3085	1	SNAP RING
18	8866-2193	1	HEX HD PLUG (includes o-ring)
	8859-1205	1	O-RING
19	9112-3089	1	COUNTERBALANCE VALVE
	9103-4276	1	COUNTERBALANCE VALVE SEAL KIT
20	1440-3426	AR	LOCTITE PRIMER
21	1440-4102	AR	LOCTITE 277 (red)
22	8000-3447	2	THREADED CAP PLUG
23	9112-6036	1	TUBE WELDMENT

HYDRAULIC COMPONENTS
(9108-3379) Tilt Cylinder - Seitz

Starting Serial No. 0188002 Thru 0288586, 0288588 Thru 0288691, 0288693, 0288694, & 0288716 Thru 0288939, * 0388021 thru 0388053
Original Issue 1-90
Revised 2-20-96

NOTE: MACHINES WITH S/N'S THAT END IN (H) WILL HAVE IOWA CYLINDERS, UNLESS OTHERWISE NOTED.

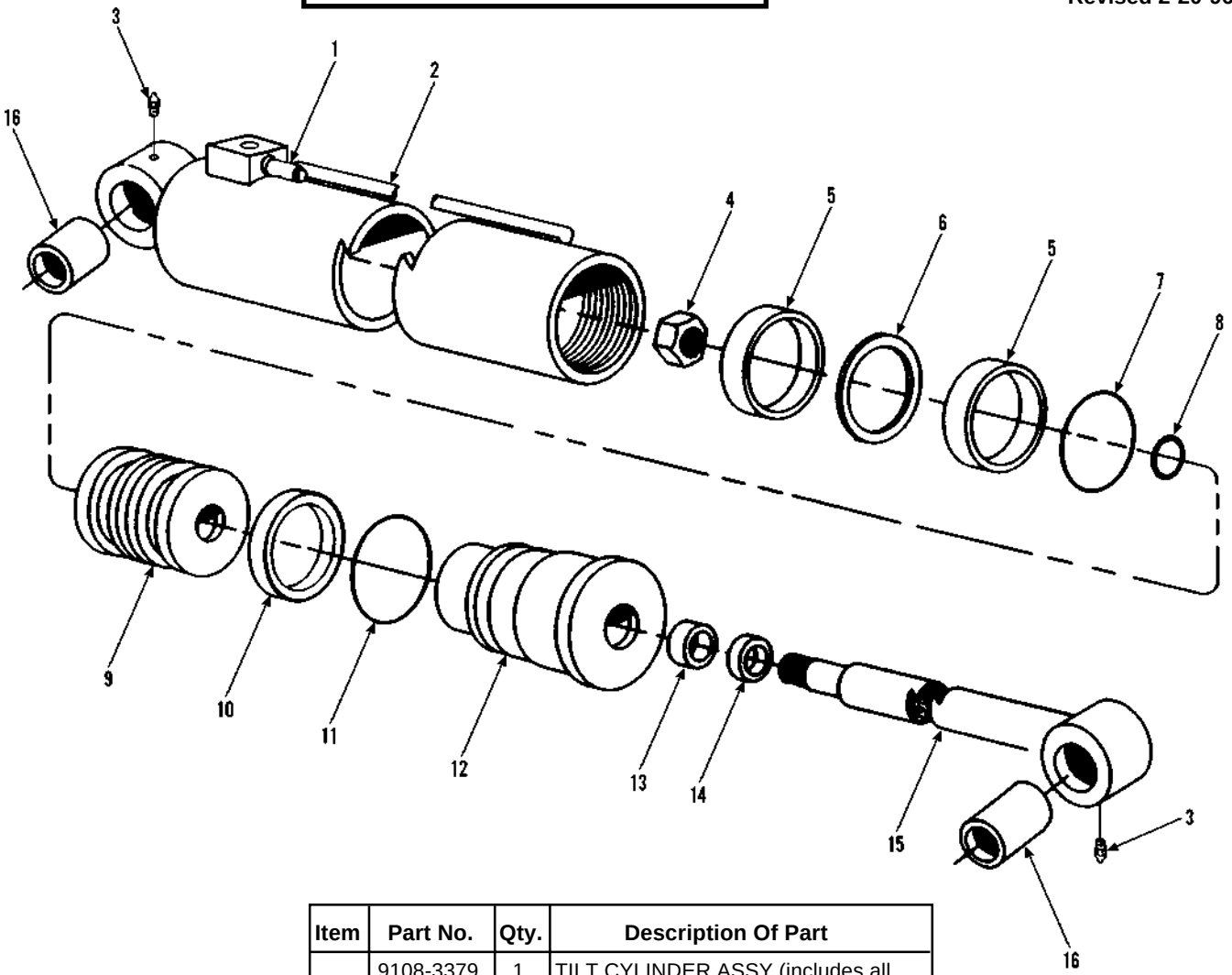

Item	Part No.	Qty.	Description Of Part
	9108-3379	1	TILT CYLINDER ASSY (includes all items)
	9103-4297	1	SEAL KIT (includes items 5, 6, 7, 8, 10, 11, 13 &14)
1	9103-3430	1	COUNTERBALANCE VALVE
2	9108-4216	1	TUBE ASSY
3	8867-1033	2	LUBE FITTING, STRAIGHT, 1/4-28
4	9103-4286	1	NUT
5		2	WEAR RING
6		1	SEAL
7		1	O-RING
8		1	O-RING
9	9103-4291	1	PISTON
10		1	BACK-UP RING
11		1	O-RING
12	9103-4299	1	GLAND
13		1	SEAL
14		1	WIPER
15	9108-4217	1	ROD ASSY
16	9108-4176	4	BUSHING
			NOTE: ONLY ITEMS WITH PART NUMBERS ARE AVAILABLE FOR SERVICE.

** Changed S/N listings.*

NOTE: MACHINES WITH S/N'S THAT END IN (H) WILL HAVE IOWA CYLINDERS, UNLESS OTHERWISE NOTED.

HYDRAULIC COMPONENTS
(9108-3472) Tilt Cylinder - Iowa

Starting Serial No. 0288587, 0288692
0288695 Thru 0288715 &
0288940H Thru 0388020H
Original Issue 7-95
Revised 6-27-07

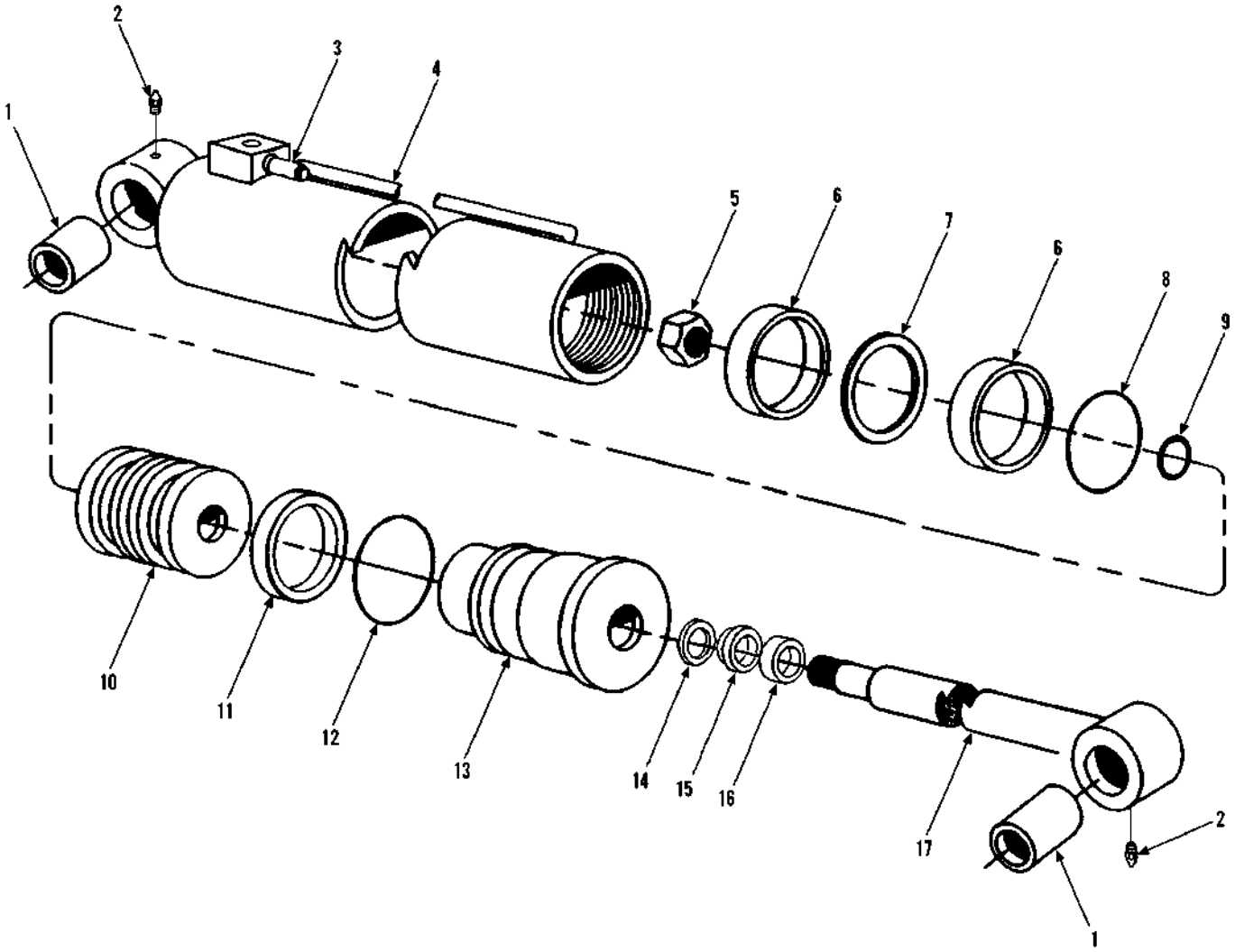

Item	Part No.	Qty.	Description Of Part
	9108-3472	1	TILT CYLINDER ASSY (includes all items)
	9103-4337	1	SEAL KIT (includes items 6 thru 9, 11, 12 & 14 thru 16)
* 1	9140-4352	2	BUSHING
2	9114-4128	2	GREASE FITTING
3	9108-3473	1	COUNTERBALANCE VALVE
4	9112-4076	1	CASE ASSY
5	9106-4017	1	LOCKNUT (torque to 650-750 ft.lbs.)
6		2	WEAR RING
7		1	SEAL
8		1	O-RING
9		1	O-RING

Item	Part No.	Qty.	Description Of Part
10	9104-4274	1	PISTON
11		1	BACK-UP RING
12		1	O-RING
13	9112-4077	1	GLAND
14		1	STEP SEAL
15		1	U-CUP
16		1	WIPER
17	9112-4078	1	SHAFT ASSY
			NOTE: ONLY ITEMS WITH PART NUMBERS ARE AVAILABLE FOR SERVICE.

** Revised part number on item 1.*

HYDRAULIC COMPONENTS
(9108-3513) Tilt Cylinder - Iowa
Starting Serial No. 0388054
Original Issue 2-96
Revised 6-27-07

NOTE: MACHINES WITH S/N'S THAT END IN (H) WILL HAVE IOWA CYLINDERS, UNLESS OTHERWISE NOTED.

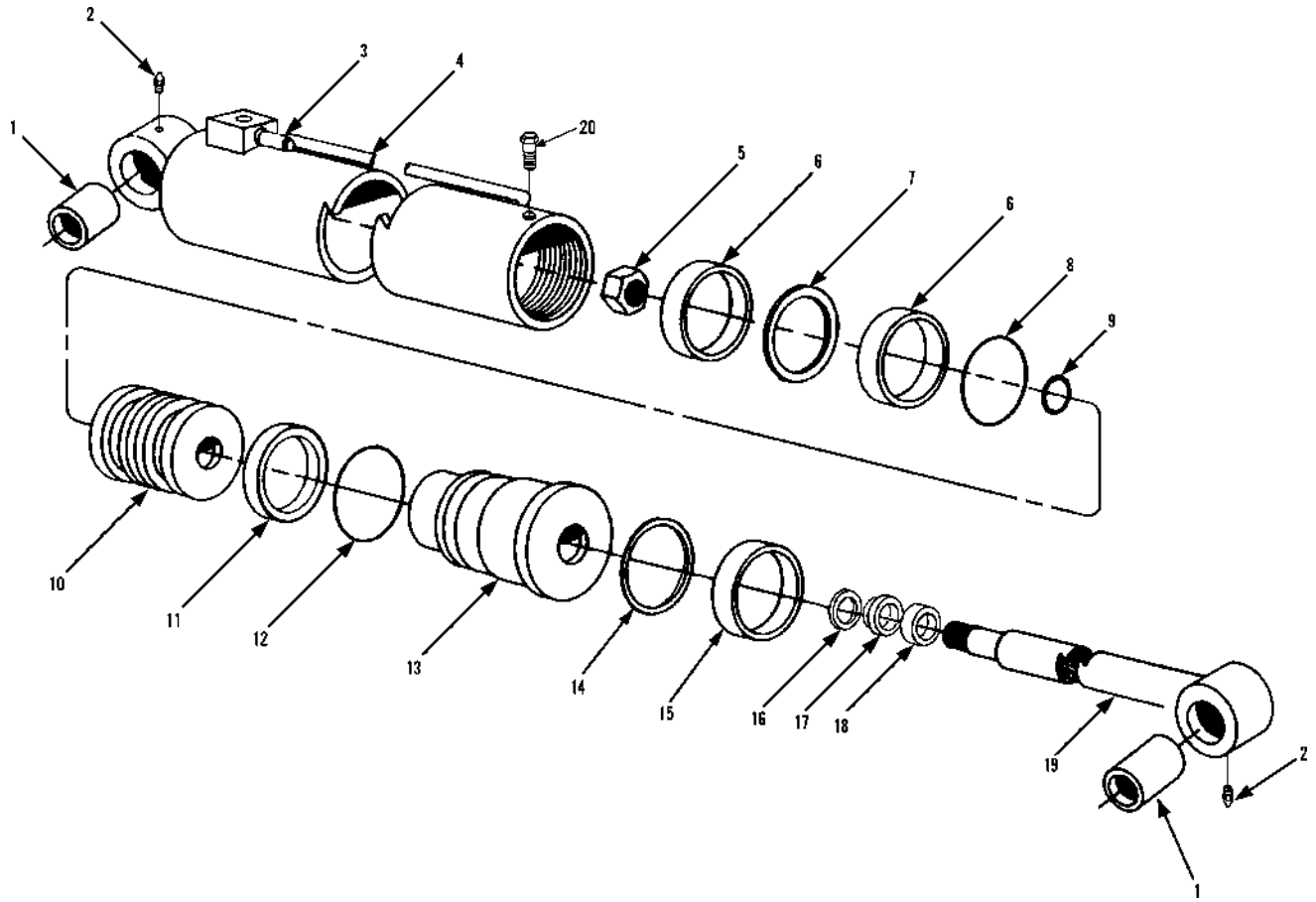

Item	Part No.	Qty.	Description Of Part
	9108-3513	1	TILT CYLINDER ASSY, (includes all items)
	9108-4370	1	SEAL KIT, (includes items 6 thru 9, 11, 12 & 16 thru 18)
* 1	9140-4352	2	BUSHING
2	9114-4128	2	GREASE FITTING
3	9108-3473	1	COUNTERBALANCE VALVE
	9103-4276	1	COUNTERBALANCE VALVE SEAL KIT
4	9112-4076	1	CASE ASSY
5	9106-4017	1	LOCKNUT, (torque to 650-750 ft.lbs.)
6		2	WEAR RING
7		1	SEAL
8		1	O-RING
9		1	O-RING
10	9104-4274	1	PISTON

Item	Part No.	Qty.	Description Of Part
11		1	BACK-UP RING
12		1	O-RING
13	9108-4371	1	GLAND
14	9108-4372	1	SNAP RING
15	9108-4373	1	WEAR RING
16		1	STEP SEAL
17		1	U-CUP
18		1	WIPER
19	9112-4078	1	SHAFT ASSY
20	9112-4096	1	SELF TAPPING SCREW, #10-24
			NOTE: ONLY ITEMS WITH PART NUMBERS ARE AVAILABLE FOR SERVICE.

** Revised part number on item 1.*

HYDRAULIC COMPONENTS
Tilt Cylinder (532)
Starting Serial No. 0188002
Original Issue 1-90
Revised 10-10-95

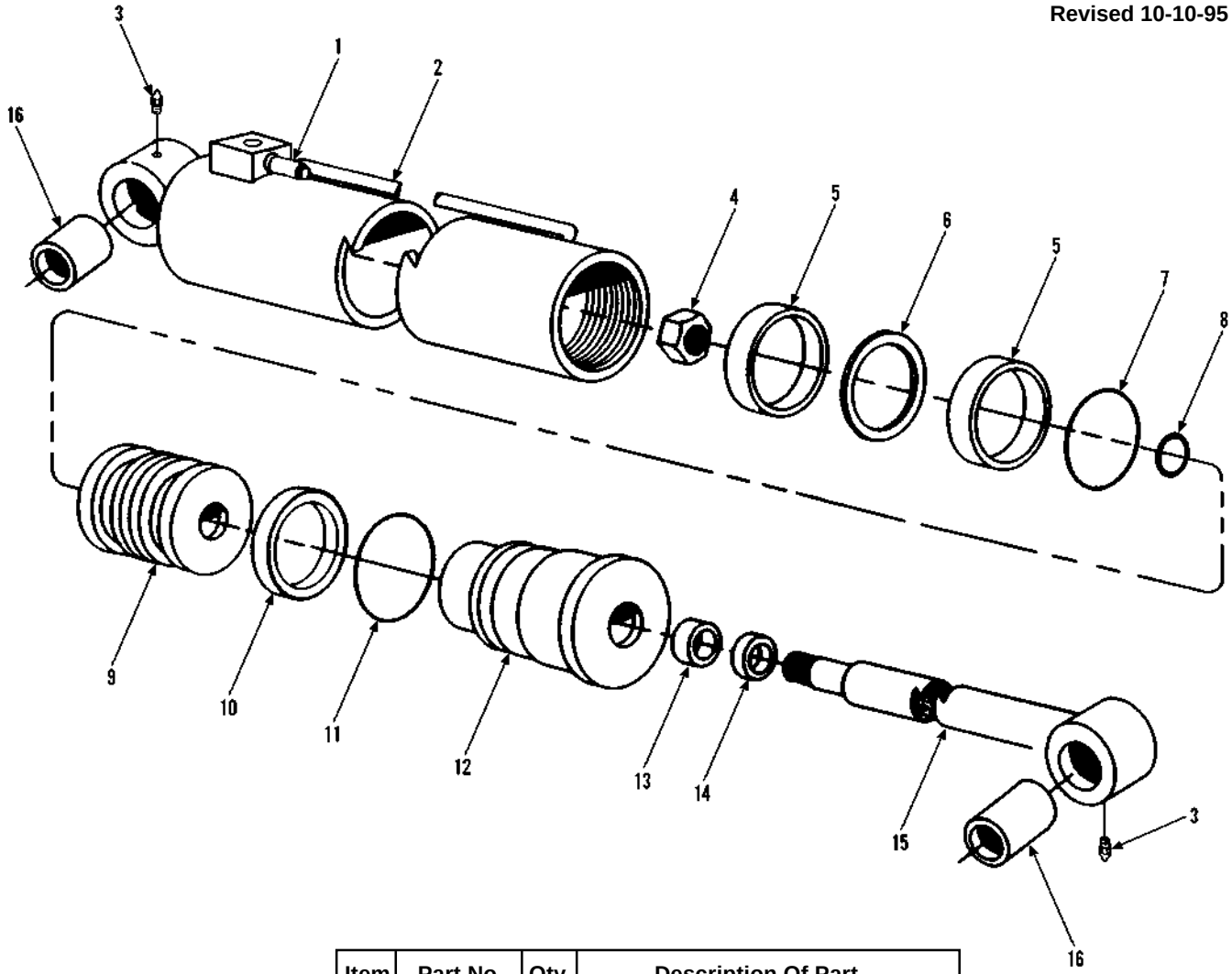

Item	Part No.	Qty.	Description Of Part
	9112-3067	1	TILT CYLINDER ASSY (includes all items)
	9103-4278	Ref	SEAL KIT (includes items 5, 6, 7, 8, 10, 11, 13 & 14)
1	9103-3430	1	COUNTERBALANCE VALVE
2	9112-4053	1	TUBE ASSY
3	8867-1033	2	LUBE FITTING, STRAIGHT, 1/4-28
4	9103-4280	1	NUT
5		2	WEAR RING
6		1	SEAL
7		1	O-RING
8		1	O-RING
9	9103-4281	1	PISTON
10		1	BACK-UP RING
11		1	O-RING
12	9103-4282	1	GLAND
13		1	SEAL
14		1	WIPER
15	9112-4054	1	ROD ASSY
16	9108-4176	2	BUSHING
			NOTE: ONLY ITEMS WITH PART NUMBERS ARE AVAILABLE FOR SERVICE.

** Changed upper left to designate model more clearly.*

HYDRAULIC COMPONENTS
(9108-3285) Compensating Cylinder - Seitz

Starting Serial No. 0188002 Thru 0288586,
0288588 Thru 0288691, 0288693,
0288694, & 0288716 Thru 0288939,
*** 0388021 thru 0388087**
Original Issue 1-90
Revised 10-20-95

NOTE: MACHINES WITH S/N'S THAT END IN (H) WILL HAVE IOWA CYLINDERS, UNLESS OTHERWISE NOTED.

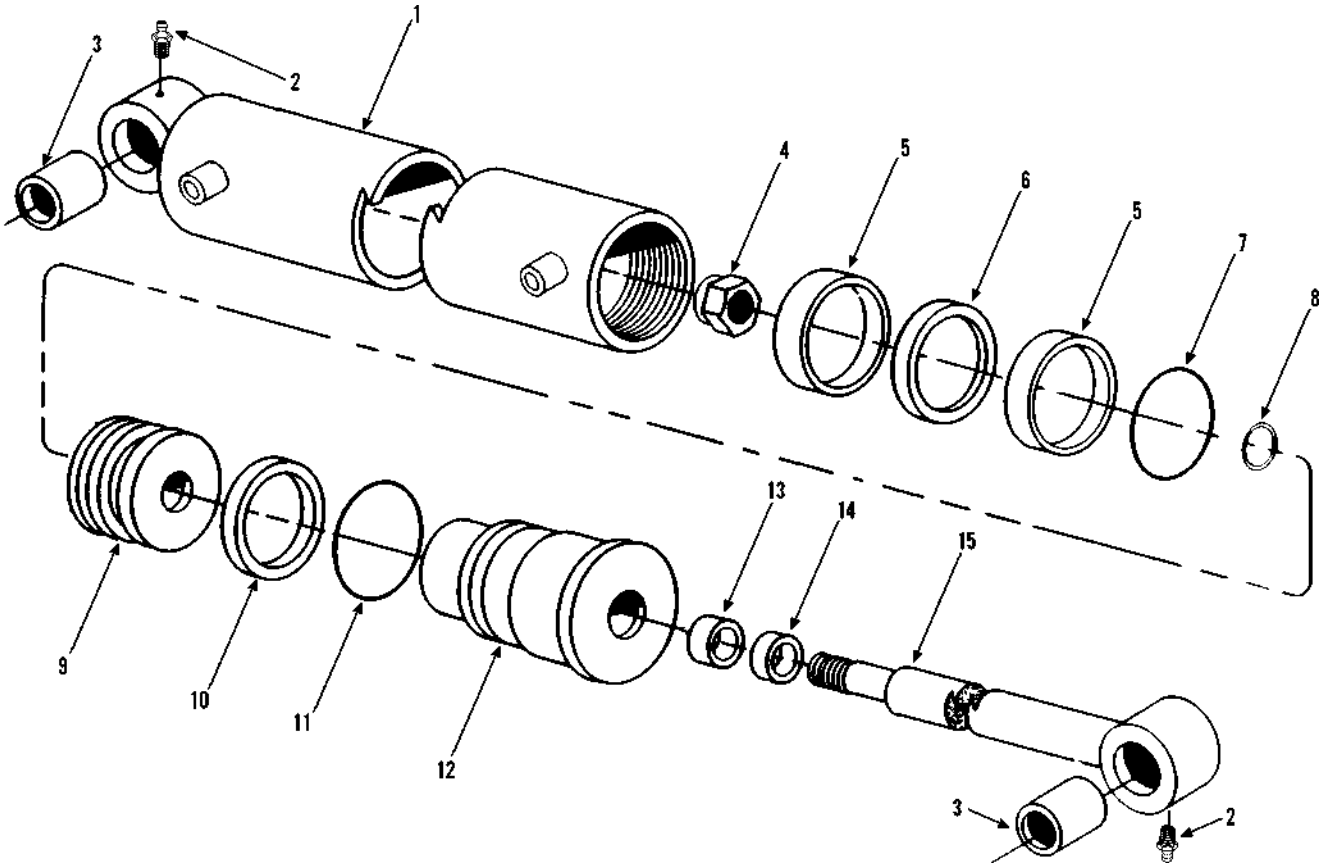

Item	Part No.	Qty.	Description Of Part
	9108-3285	1	COMPENSATING CYLINDER ASSY (includes all items)
	9108-4169	Ref	SEAL KIT (includes items 5, 6, 7, 8, 10, 11, 13 & 14)
1	9108-4168	1	TUBE ASSY
2	8867-1033	2	LUBE FITTING -STRAIGHT, 1/4-28
3	9108-4167	4	BUSHING
4	9103-4280	1	NUT
5		2	WEAR RING
6		1	SEAL
7		1	O-RING
8		1	O-RING
9	9108-4165	1	PISTON
10		1	BACK-UP RING
11		1	O-RING
12	9103-4282	1	GLAND
13		1	SEAL
14		1	WIPER
15	9108-4166	1	ROD ASSY
			NOTE: ONLY ITEMS WITH PART NUMBERS ARE AVAILABLE FOR SERVICE.

** Changed S/N listings.*

HYDRAULIC COMPONENTS
(9108-3470) Compensating Cylinder - Iowa

Starting Serial No. 0288587, 0288692
0288695 Thru 0288715 &
0288940H Thru 0388020H,
*** Starting S/N 0388088H -**
Original Issue 7-95
Revised 10-20-95

NOTE: MACHINES WITH S/N'S THAT END IN (H) WILL HAVE IOWA CYLINDERS, UNLESS OTHERWISE NOTED.

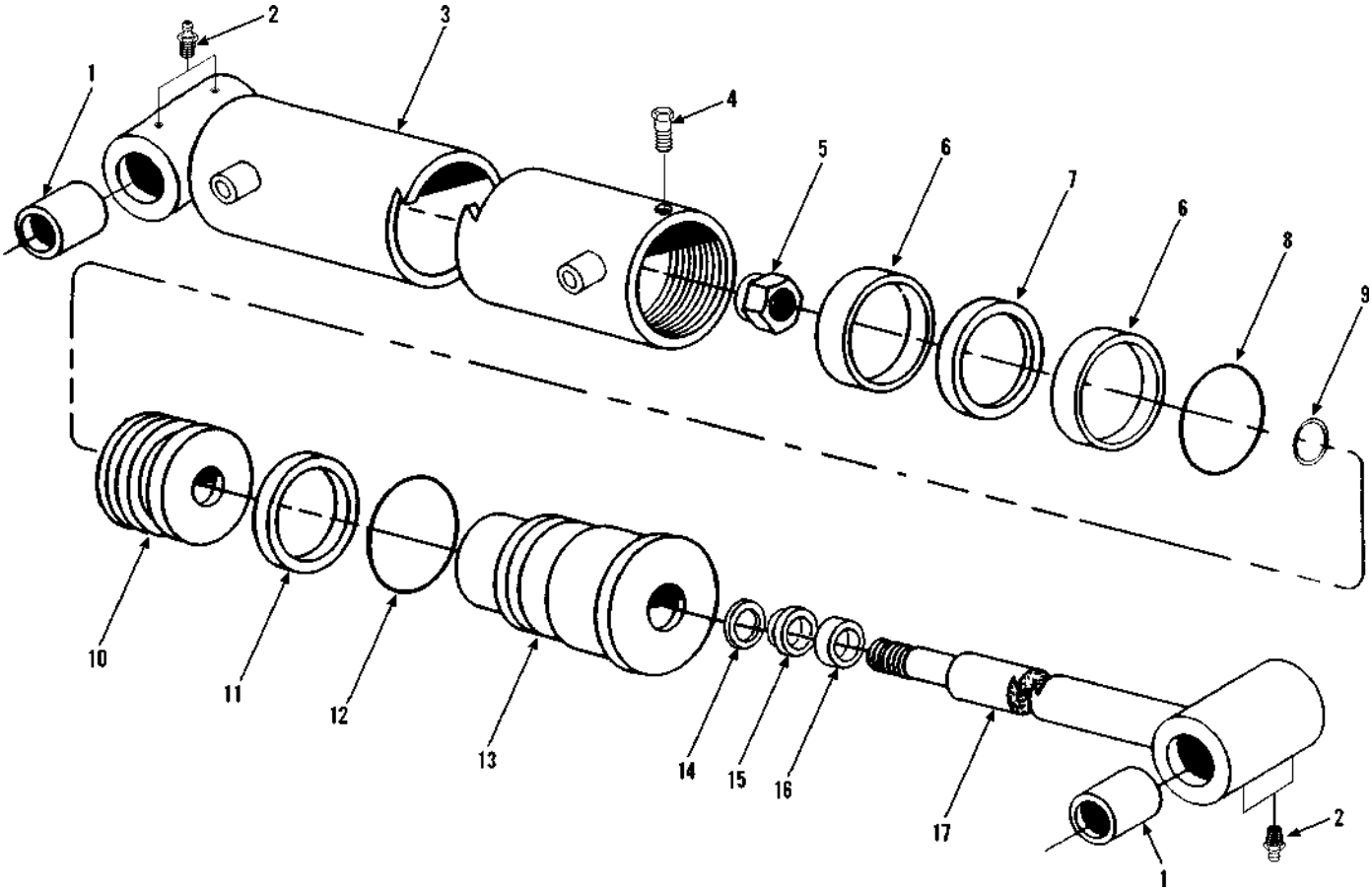

Item	Part No.	Qty.	Description Of Part
	9108-3470	1	COMPENSATING CYLINDER ASSY (includes all items)
	9103-4339	1	SEAL KIT (includes items 6 thru 9, 11, 12, & 14 thru 16)
1	9114-4080	4	BUSHING
2	9114-4128	4	GREASE FITTING
3	9112-4079	1	CASE ASSY
4	9114-4017	1	CAPSCREW, #8X32X.375
5	9103-4153	1	LOCKNUT (lubricate & torque to 1175-1275 ft.lbs.)
6		2	WEAR RING
7		1	PISTON SEAL
8		1	O-RING

Item	Part No.	Qty.	Description Of Part
9		1	O-RING
10	9103-4139	1	PISTON
11		1	BACK-UP RING
12		1	O-RING
13	9112-4081	1	CYLINDER HEAD
14		1	STEP SEAL
15		1	U-CUP
16		1	WIPER
17	9112-4082	1	ROD ASSY
			NOTE: ONLY ITEMS WITH PART NUMBERS ARE AVAILABLE FOR SERVICE.

** Changed S/N listings.*

HYDRAULIC COMPONENTS
Compensating Cylinder (532)

Starting Serial No. 0188002
Original Issue 1-90
Revised 10-10-95

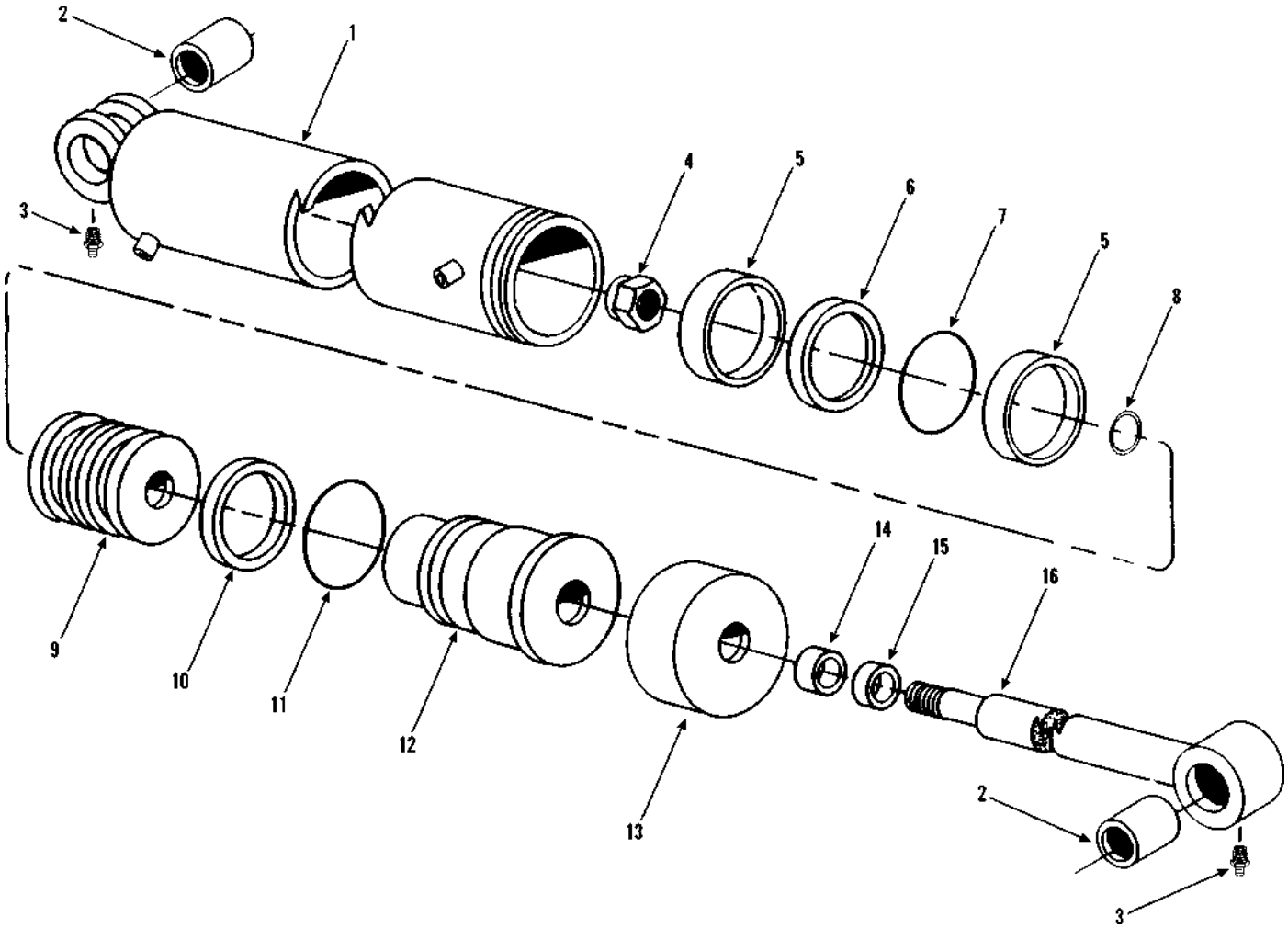

Item	Part No.	Qty.	Description Of Part
	9112-3049	1	TILT COMPENSATING CYLINDER ASSY (includes all items)
	9112-4049	Ref	SEAL KIT (includes items 5, 6, 7, 8, 10, 11, 14 & 15)
1	9112-4045	1	TUBE ASSY
2	9108-4167	4	BUSHING
3	8867-1033	2	LUBE FITTING -STRAIGHT, 1/4-28
4	9103-4280	1	NUT
5		2	WEAR RING
6		1	SEAL
7		1	O-RING
8		1	O-RING
9	9112-4046	1	PISTON
10		1	BACK-UP RING
11		1	O-RING
12	9112-4048	1	GLAND
13	9112-4050	1	HEAD NUT
14		1	SEAL
15		1	WIPER
16	9112-4047	1	ROD ASSY
			NOTE: ONLY ITEMS WITH PART NUMBERS ARE AVAILABLE FOR SERVICE.

** Changed upper left to designate model more clearly.*

NOTE: MACHINES WITH S/N'S THAT END IN (H) WILL HAVE IOWA CYLINDERS, UNLESS OTHERWISE NOTED.

HYDRAULIC COMPONENTS
(9108-3286) Sway Cylinder - Seitz

Starting Serial No. 0188002 Thru 0288586, 0288588 Thru 0288691, 0288693, 0288694, & 0288716 Thru 0288939, * 0388021 thru 0388087
Original Issue 1-90
Revised 10-20-95

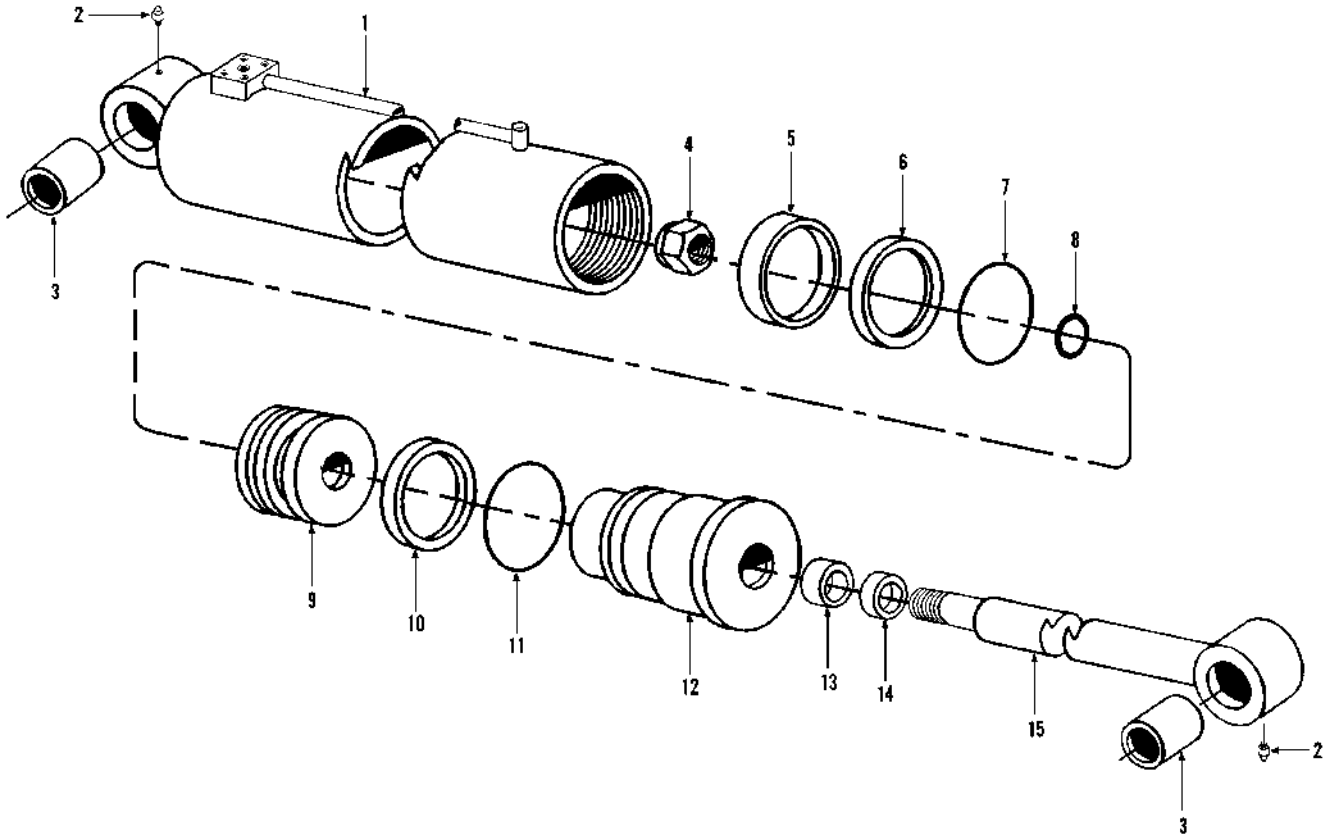

Item	Part No.	Qty.	Description Of Part
	9108-3286	1	SWAY CYLINDER ASSY (includes all items)
	9108-4189	Ref	SEAL KIT (includes items 5, 6, 7, 8, 10, 11, 13, & 14)
1	9108-4185	1	TUBE ASSY
2	8867-1033	2	LUBE FITTING, STRAIGHT, 1/4-28
3	9108-4176	4	BUSHING
4	9108-4184	1	NUT
5	9108-4219	1	WEAR RING
6	9108-4220	1	SEAL
7	9108-4221	1	O-RING
8	9108-4222	1	O-RING
9	9108-4186	1	PISTON
10	9108-4223	1	BACKUP RING
11	9108-4224	1	O-RING
12	9108-4188	1	GLAND
13	9108-4225	1	SEAL
14	9108-4226	1	WIPER
15	9108-4187	1	ROD ASSY

** Changed S/N listings.*

HYDRAULIC COMPONENTS
(9108-3471) Sway Cylinder - Iowa

Starting Serial No. 0288587, 0288692
0288695 Thru 0288715 &
0288940H Thru 0388020H,
Starting S/N 0388088H -
Original Issue 7-95
Revised 6-27-07

NOTE: MACHINES WITH S/N'S THAT END IN (H) WILL HAVE IOWA CYLINDERS, UNLESS OTHERWISE NOTED.

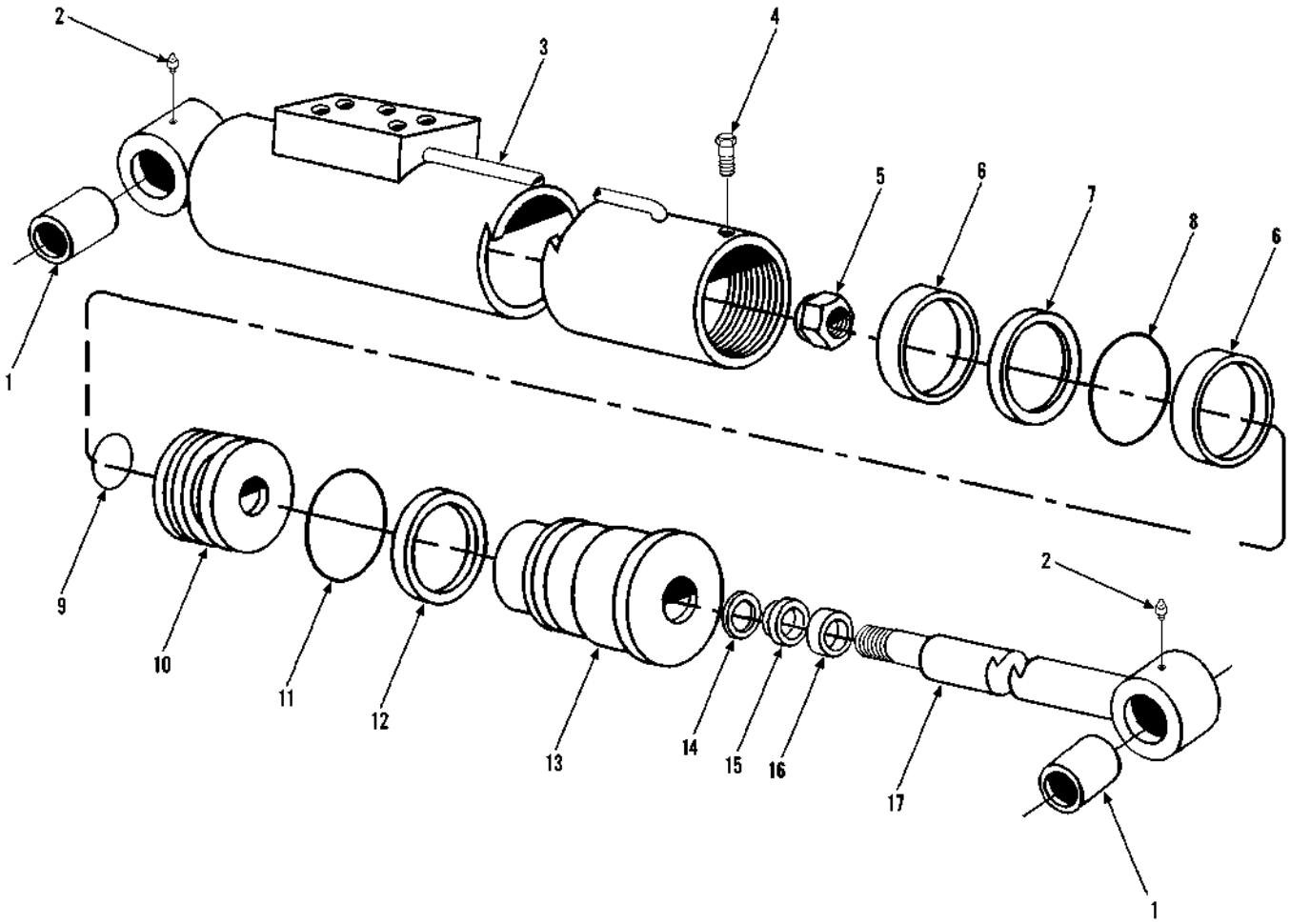

Item	Part No.	Qty.	Description Of Part
	9108-3471	1	SWAY CYLINDER ASSY (includes all items)
	9108-4308	1	SEAL KIT (includes items 6 thru 9, 11, 12, & 14 thru 16)
* 1	9140-4352	2	BUSHING
2	9114-4128	2	GREASE FITTING
3	9112-4083	1	CASE ASSY
4	9114-4017	1	CAPSCREW, #8X32X.375
5	9103-4156	1	LOCKNUT (lubricate & torque to 350-400 ft.lbs.)
6		2	WEAR RING
7		1	PISTON SEAL
8		1	O-RING

Item	Part No.	Qty.	Description Of Part
9		1	O-RING
10	9112-4084	1	PISTON
11		1	O-RING
12		1	BACK-UP RING
13	9112-4085	1	CYLINDER HEAD
14		1	STEP SEAL
15		1	U-CUP
16		1	WIPER
17	9112-4086	1	ROD ASSY
			NOTE: ONLY ITEMS WITH PART NUMBERS ARE AVAILABLE FOR SERVICE.

** Revised part number on item 1.*

HYDRAULIC COMPONENTS
(9112-3133) Sway Cylinder - Iowa

Starting Serial No. 0388247
Original Issue 3-96
Revised 1-10-03

NOTE: MACHINES WITH S/N'S THAT END IN (H) WILL HAVE IOWA CYLINDERS, UNLESS OTHERWISE NOTED.

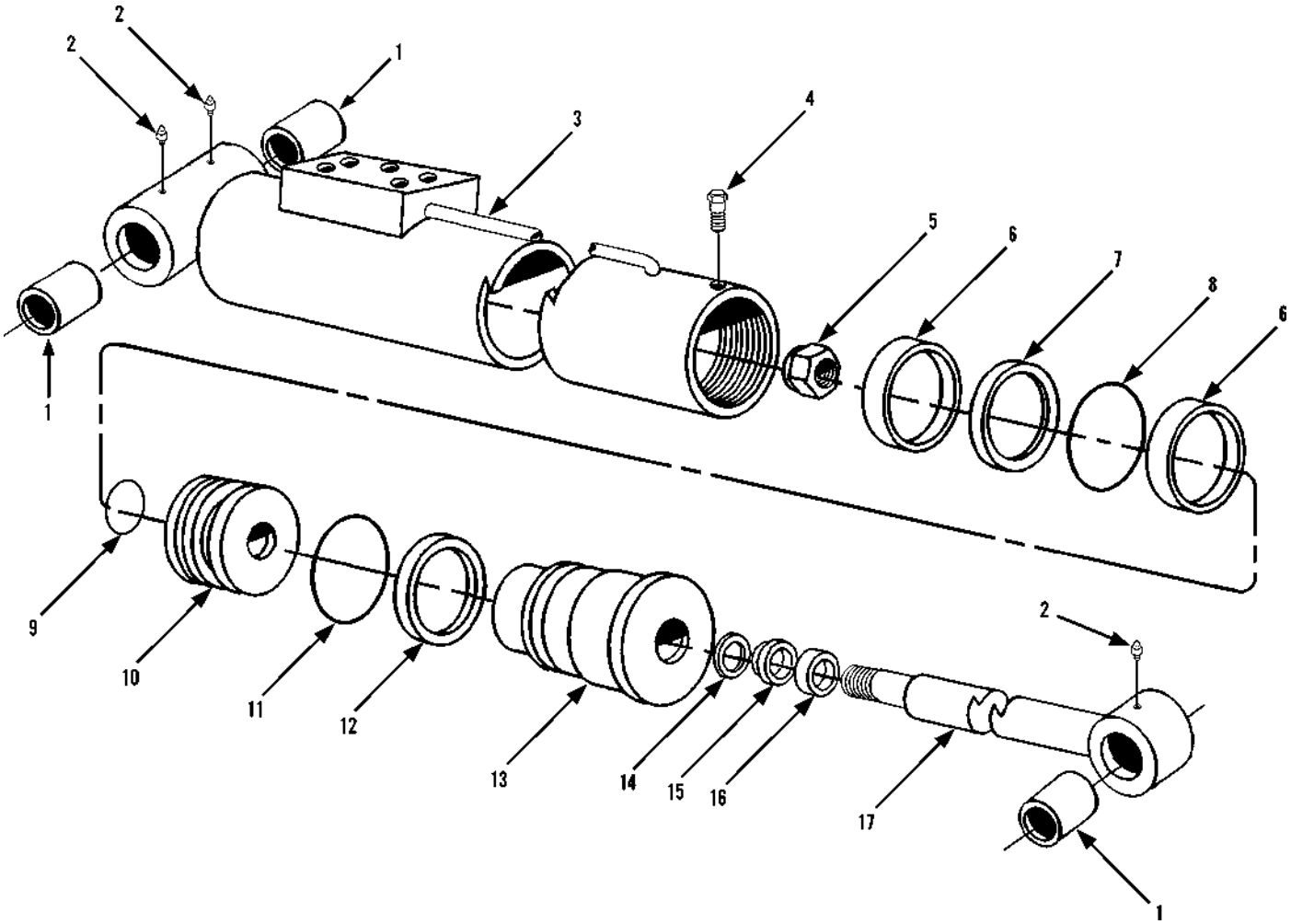

Item	Part No.	Qty.	Description Of Part
	9112-3133	1	SWAY CYLINDER ASSY, (includes all items)
	9108-4308	1	SEAL KIT, (includes items 6 thru 9, 11, 12 & 14 thru 16)
* 1	9106-4016	3	BUSHING
* 2	9114-4128	3	LUBE FITTING
3	9112-4095	1	CASE ASSY
4	9112-4096	1	SELF-TAPPING SCREW
5	9103-4156	1	LOCKNUT, (lubricate & torque to 350-400 ft.lbs.)
6	9112-4097	2	WEAR RING
7	9112-4098	1	PISTON SEAL
8	9112-4099	1	O-RING

Item	Part No.	Qty.	Description Of Part
9	9112-4100	1	O-RING
10	9112-4084	1	PISTON
11	9120-4465	1	O-RING
12	9120-4466	1	BACK-UP RING
13	9112-4085	1	CYLINDER HEAD
14	9112-4101	1	STEP SEAL
15	9112-4102	1	U-CUP
16	9112-4103	1	WIPER
17	9112-4104	1	ROD ASSY
			NOTE: ONLY ITEMS WITH PART NUMBERS ARE AVAILABLE FOR SERVICE.

** Revised illustration and quantity on items 1 & 2.*

HYDRAULIC COMPONENTS
(9108-3281) Steering Cylinder - Seitz

Starting Serial No. 0188002 Thru 0288586, 0288588 Thru 0288691, 0288693, 0288694, & 0288716 Thru 0288939, 0388021 thru 0388087
Original Issue 1-90
Revised 5-12-00

NOTE: MACHINES WITH S/N'S THAT END IN (H) WILL HAVE IOWA CYLINDERS, UNLESS OTHERWISE NOTED.

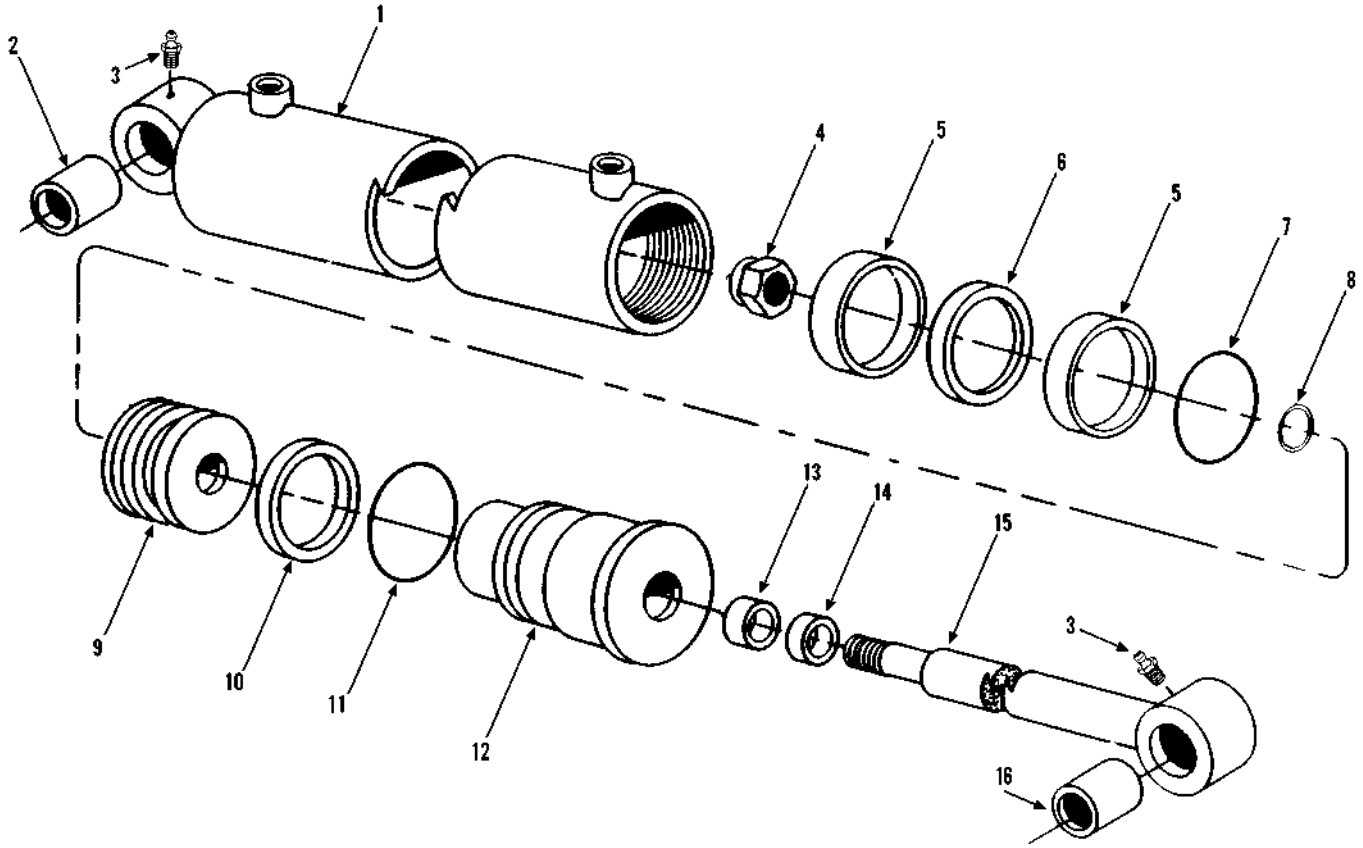

Item	Part No.	Qty.	Description Of Part
	9108-3281	2	STEERING CYLINDER ASSY (includes all items)
	9108-4183	Ref	SEAL KIT (includes items 5, 6, 7, 8, 10, 11, 13 &14)
1	9108-4178	1	TUBE ASSY
2	9108-4194	1	BUSHING
3	8867-1033	2	LUBE FITTING -STRAIGHT, 1/4-28
4	9108-4177	1	NUT
5		2	WEAR RING
6		1	SEAL
7		1	O-RING
8		1	O-RING
9	9108-4179	1	PISTON
10		1	BACK-UP RING
11		1	O-RING
12	9108-4181	1	GLAND
13		1	SEAL
14		1	WIPER
15	9108-4180	1	ROD ASSY
*16	9104-3246	1	BUSHING
			NOTE: ONLY ITEMS WITH PART NUMBERS ARE AVAILABLE FOR SERVICE.

** Revised part number on item 16.*

NOTE: MACHINES WITH S/N'S THAT END IN (H) WILL HAVE IOWA CYLINDERS, UNLESS OTHERWISE NOTED.

HYDRAULIC COMPONENTS
(9108-3467) Steering Cylinder - Iowa

Starting Serial No. 0288587, 0288692
0288695 Thru 0288715 &
0288940H Thru 0388020H,
*** Starting S/N 0388088H -**
Original Issue 7-95
Revised 10-20-95

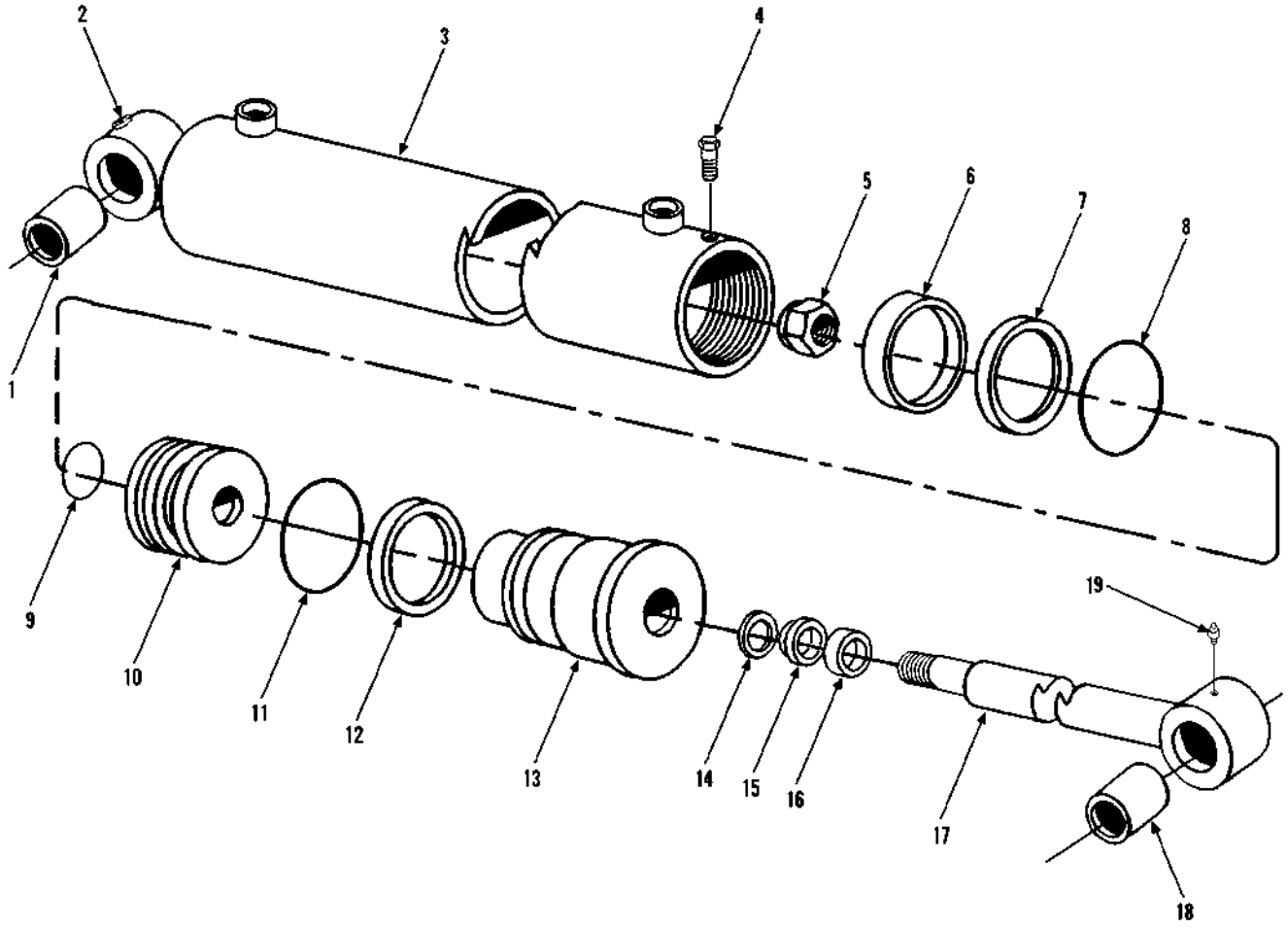

Item	Part No.	Qty.	Description Of Part
	9108-3467	2	STEERING CYLINDER ASSY (includes all items)
	9108-4305	1	SEAL KIT (includes items 6 thru 9, 11, 12 & 14 thru 16)
1	9112-4087	1	BUSHING
2		1	HEX SOCKET PLUG, 9/16-18
3	9112-4088	1	CASE ASSY
4	9114-4017	1	CAPSCREW, #8X32X.375
5	9120-4460	1	LOCKNUT (lubricate & torque to 350-370 ft.lbs.)
6		1	WEAR RING
7		1	PISTON SEAL
8		1	O-RING
9		1	O-RING

Item	Part No.	Qty.	Description Of Part
10	9112-4089	1	PISTON
11		1	O-RING
12		1	BACK-UP RING
13	9112-4090	1	CYLINDER HEAD
14		1	STEP SEAL
15		1	U-CUP
16		1	WIPER
17	9112-4091	1	ROD ASSY
18	9104-3246	1	BUSHING
19	9114-4128	1	GREASE FITTING
			NOTE: ONLY ITEMS WITH PART NUMBERS ARE AVAILABLE FOR SERVICE.

** Changed S/N listings.*

HYDRAULIC COMPONENTS
(9108-3532) Steering Cylinder - Iowa
Starting Serial No. 0388496
Original Issue 2-97

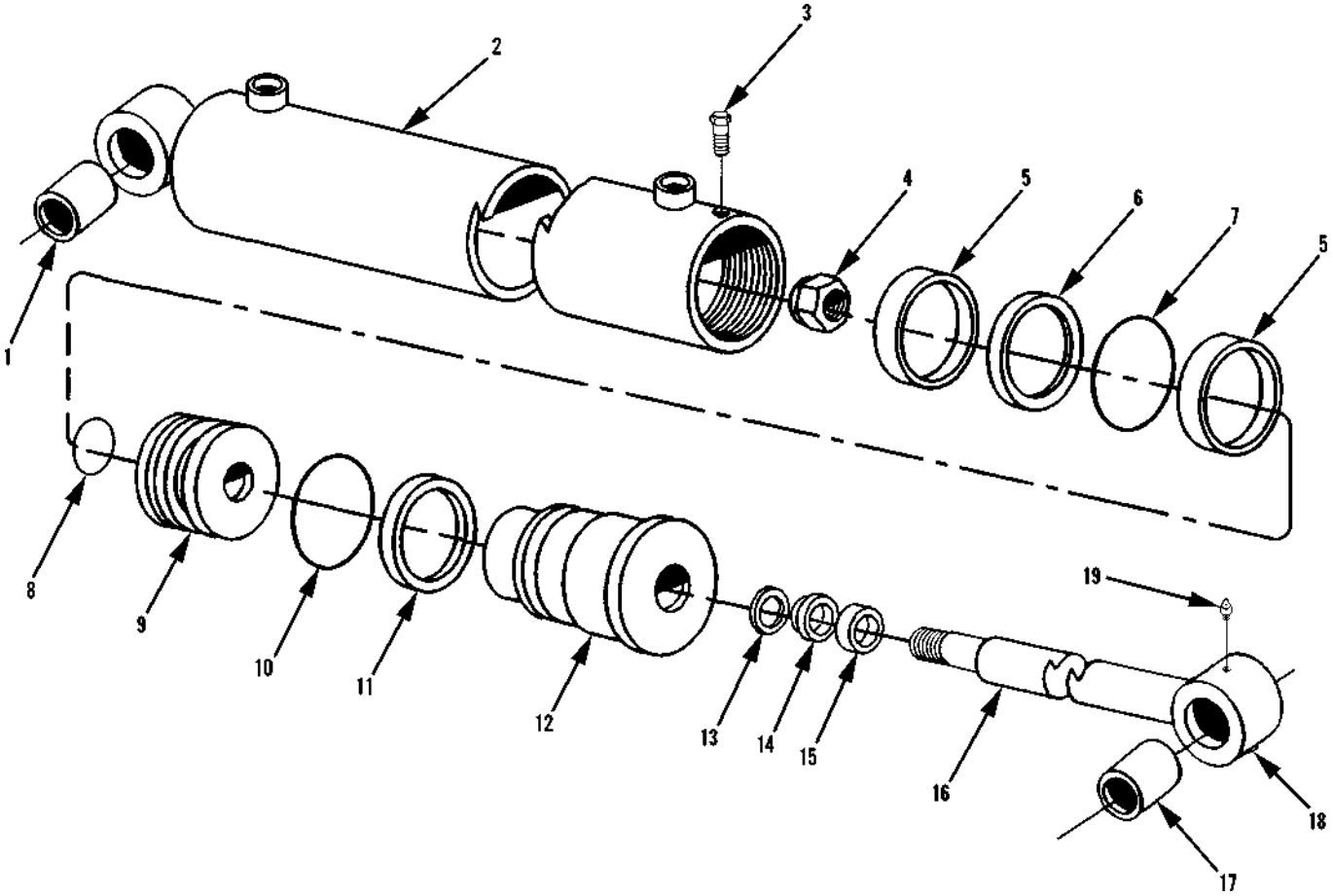

Item	Part No.	Qty.	Description Of Part
	9108-3532	2	STEERING CYLINDER ASSY (includes all items)
	9108-4305	1	SEAL KIT (includes items 5 thru 8, 10, 11 & 13 thru 15)
1	9112-4087	1	BUSHING
2	9112-4088	1	CASE ASSY
3	9112-4096	1	SELF-TAPPING SCREW
4	9120-4460	1	LOCKNUT (lubricate & torque to 350-370 ft.lbs.)
5		2	WEAR RING
6		1	PISTON SEAL
7		1	O-RING
8		1	O-RING
9	9112-4089	1	PISTON

Item	Part No.	Qty.	Description Of Part
10		1	O-RING
11		1	BACK-UP RING
12	9112-4090	1	CYLINDER HEAD
13		1	STEP SEAL
14		1	U-CUP
15		1	WIPER
16	9112-4108	1	ROD ASSY
17	9104-3246	1	BUSHING
18	9114-4128	1	GREASE FITTING
19		1	HEX HD PLUG, 1/8-27 NPT
			NOTE: ONLY ITEMS WITH PART NUMBERS ARE AVAILABLE FOR SERVICE.

HYDRAULIC COMPONENTS
(9108-3056) Main Hydraulic Control Valve

Starting Serial No. 0188002
Original Issue 1-90
Revised 10-10-95

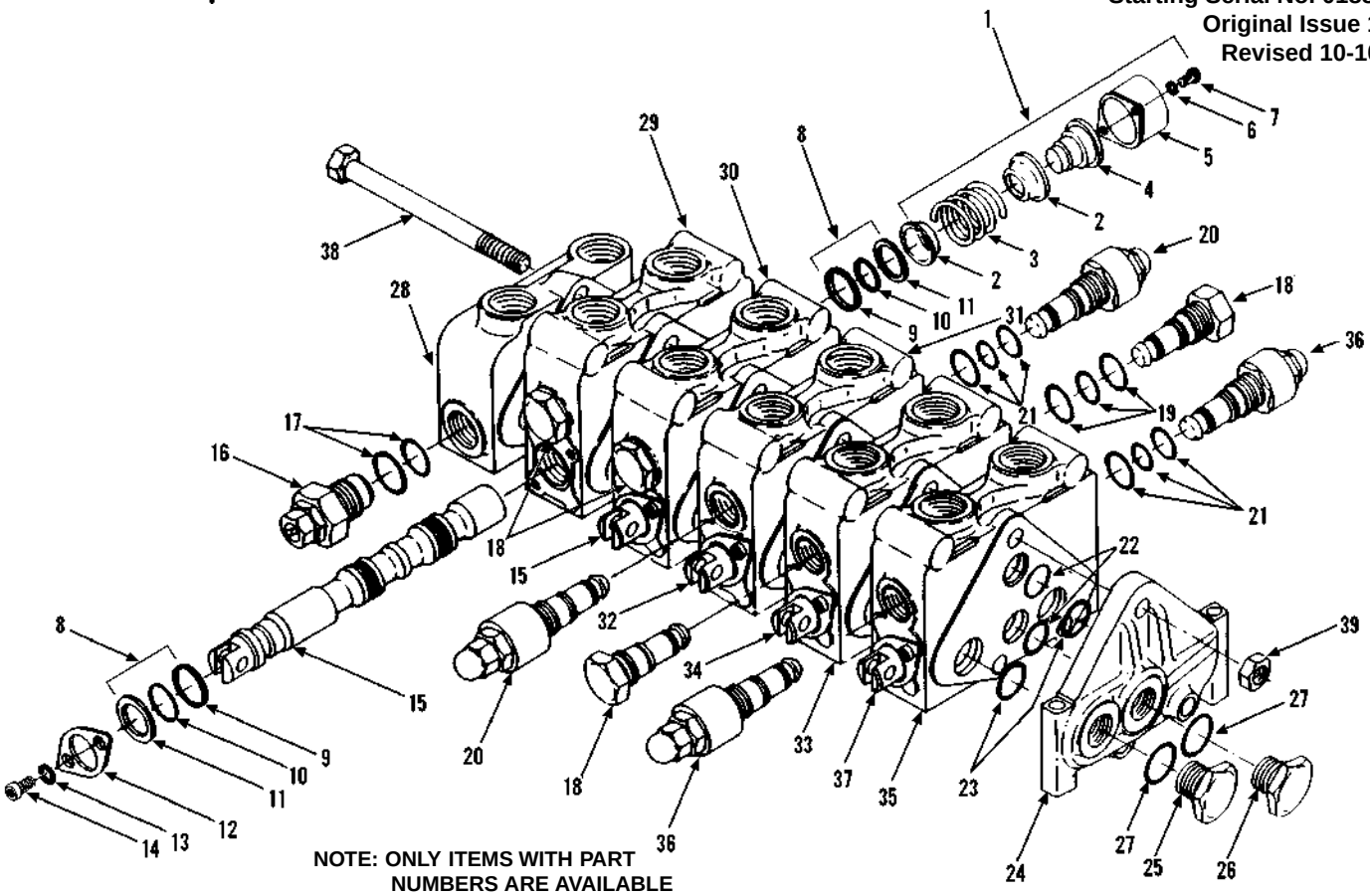

NOTE: ONLY ITEMS WITH PART NUMBERS ARE AVAILABLE FOR SERVICE

Item	Part No.	Qty.	Description Of Part
	9108-3056	Ref	MAIN HYDRAULIC CONTROL VALVE ASSY (includes all items)
1	9108-4004	4	SPOOL POSITIONER (includes item 2 thru 7)
2		2	COLLAR
3		1	SPRING
4		1	POSITIONER
5		1	BONNET
6		2	WASHER
7		2	SCREW
8	9108-4005	4	SPOOL SEAL KIT (includes items 9 thru 11)
9		2	SEAL
10		2	WASHER
11		2	RETAINER
12	9108-4006	4	SPOOL RETAINER (includes items 13 & 14)
13		2	WASHER
14		2	SCREW
15	9108-4007	2	SPOOL
16	9108-4009	1	MAIN RELIEF (includes item 17)
17	9108-4206	1	O-RING (inner)
	9108-4207	1	O-RING (outer)
18	9108-4010	6	LOAD CHECK PLUG (includes one of item 19)
19	9108-4202	6	LOAD CHECK PLUG SEAL KIT (one required/check plug)
20	9108-4199	2	RELIEF - 2800 PSI (includes one of item 21)
21	9108-4201	2	RELIEF SEAL KIT (one required/relief)
	9108-4200	AR	RELIEF SERVICE KIT

Item	Part No.	Qty.	Description Of Part
	9108-4015	5	VALVE SECTION SEAL KIT (includes items 22 & 23)
22		2	PRESSURE SEAL
23		2	EXHAUST SEAL
24	9108-4016	1	R.H. END COVER ASSY (includes items 25 thru 27)
25	9108-4017	1	PLUG
26	9108-4018	1	PLUG
27	9108-4204	2	O-RING (one required/plug)
28	9108-4008	1	L.H. COVER ASSY (includes items 16 &17)
29	9108-4011	1	VALVE SECTION ASSY (includes one each of items 1, 8, 12, 15, and two of item 18)
30	9108-4011	1	VALVE SECTION ASSY (includes one each of items 1, 8, 12, 15, and two of item 18)
31	9108-4012	1	VALVE SECTION ASSY (includes one each of items 1, 8, 12, 32, and two of item 20)
32	9108-4013	1	SPOOL
33	9108-4014	1	VALVE SECTION ASSY (includes one each of items 1, 8, 12, 34, and two of item 18)
34	9108-4013	1	SPOOL
35	9108-4012	1	VALVE SECTION ASSY
36	9108-4205	2	RELIEF - 1500 PSI (includes one of item 21)
37	9108-4013	1	SPOOL
	9108-4203	1	STUD KIT (INCLUDES 38 & 39)
38		3	STUD
39		3	NUT

** Changed upper left to designate model more clearly.*

HYDRAULIC COMPONENTS
(9108-3420) Main Hydraulic Control Valve Assembly

Starting Serial No. 0188166
Original Issue 4-93
Revised 10-10-95

NOTE: ONLY ITEMS WITH PART NUMBERS ARE AVAILABLE FOR SERVICE

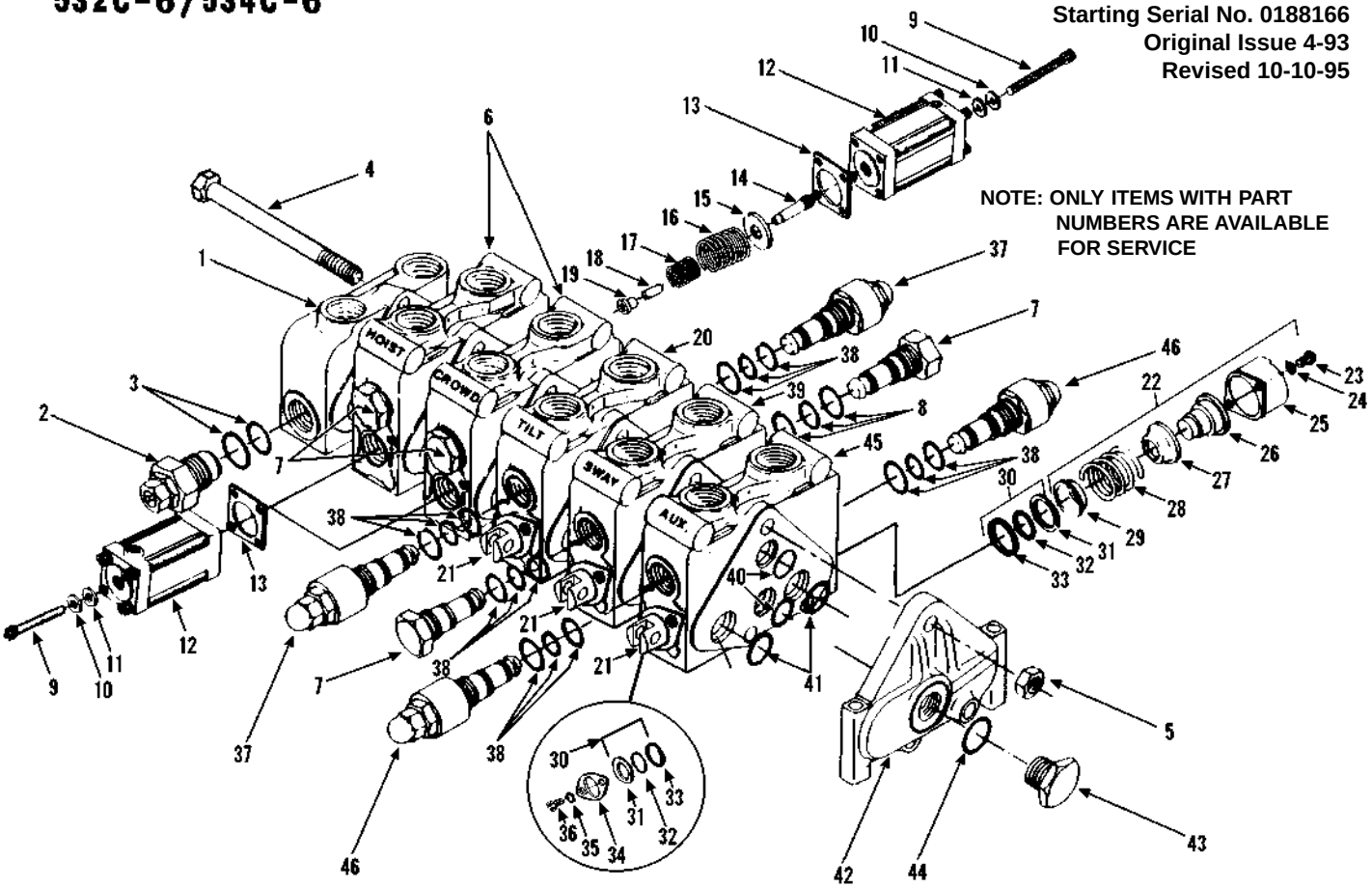

Item	Part No.	Qty.	Description Of Part
	9108-3420	1	MAIN HYDRAULIC CONTROL VALVE ASSY (includes all items)
	9112-3075	2	SPOOL POSITIONER KIT (includes item 9 thru 19)
	9108-4203	1	STUD KIT (includes items 4 & 5)
	9108-4015	5	VALVE SECTION SEAL KIT (includes items 40 & 41)
1	9108-4008	1	L.H. END COVER ASSY (includes items 2 & 3)
2	9108-4009	1	MAIN RELIEF (includes item 3)
3	9108-4206	1	O-RING (inner)
	9108-4207	1	O-RING (outer)
4		3	STUD
5		3	NUT
6	9108-4277	2	VALVE SECTION ASSY (includes two of item 7, plus items 9 thru 19)
7	9108-4010	6	LOAD CHECK PLUG (includes item 8)
8	9108-4202	6	LOAD CHECK PLUG SEAL KIT (one required per check plug)
9	9108-4230	16	SOCKET HD CAPSCREW, 1/4-20X3
10	9108-4231	16	LOCKWASHER, 1/4
11	9108-4232	4	BEARING PLATE
12	9108-4229	4	BONNET
13	9108-4233	4	SEAL
14	9108-4234	2	SPUD POSITIONER
15	9108-4235	2	WASHER
16	9108-4236	2	SPRING
17	9108-4237	2	SPRING
18	9108-4238	2	STOP SLEEVE
19	9108-4239	2	STOP COLLAR
20	9108-4012	1	VALVE SECTION ASSY (includes items 21, 22, 30, & 34, plus two of item 37)
21	9108-4013	3	SPOOL
22	9108-4004	3	SPOOL POSITIONER(includes items 23 thru 29)

Item	Part No.	Qty.	Description Of Part
23		6	SCREW
24		6	WASHER
25		3	BONNET
26		3	POSITIONER
27		3	COLLAR
28		3	SPRING
29		3	COLLAR
30	9108-4005	6	SPOOL SEAL KIT (includes items 31, 32 & 33)
31		6	RETAINER
32		6	WASHER
33		6	SEAL
34	9108-4006	3	SPOOL RETAINER (includes items 35 & 36)
35		6	SCREW
36		6	WASHER
37	9108-4199	2	RELIEF - 2800 PSI (includes one of item 38)
38	9108-4201	4	RELIEF SEAL KIT (one required per relief
	9108-4200	AR	RELIEF SERVICE KIT, NOT ILLUSTRATED (includes relief poppet and piston ring)
39	9108-4014	1	VALVE SECTION ASSY (includes 2 of item 7, plus items 21, 22, 30 & 34)
40		2	PRESSURE SEAL
41		2	PRESSURE SEAL
42	9108-4278	1	R.H. END COVER ASSY (includes item 43)
43	9108-4279	1	PLUG (includes item 44)
44		1	O-RING
45	9108-4280	1	VALVE SECTION ASSY (includes items 21, 22, 30, 34 & 46)
46	9108-4281	2	RELIEF - 1500 PSI (includes one of item 38

** Changed upper left to designate model more clearly.*

HYDRAULIC COMPONENTS
(9108-3420) Main Control Valve

Starting Serial No. 0288568
Original Issue 10-95

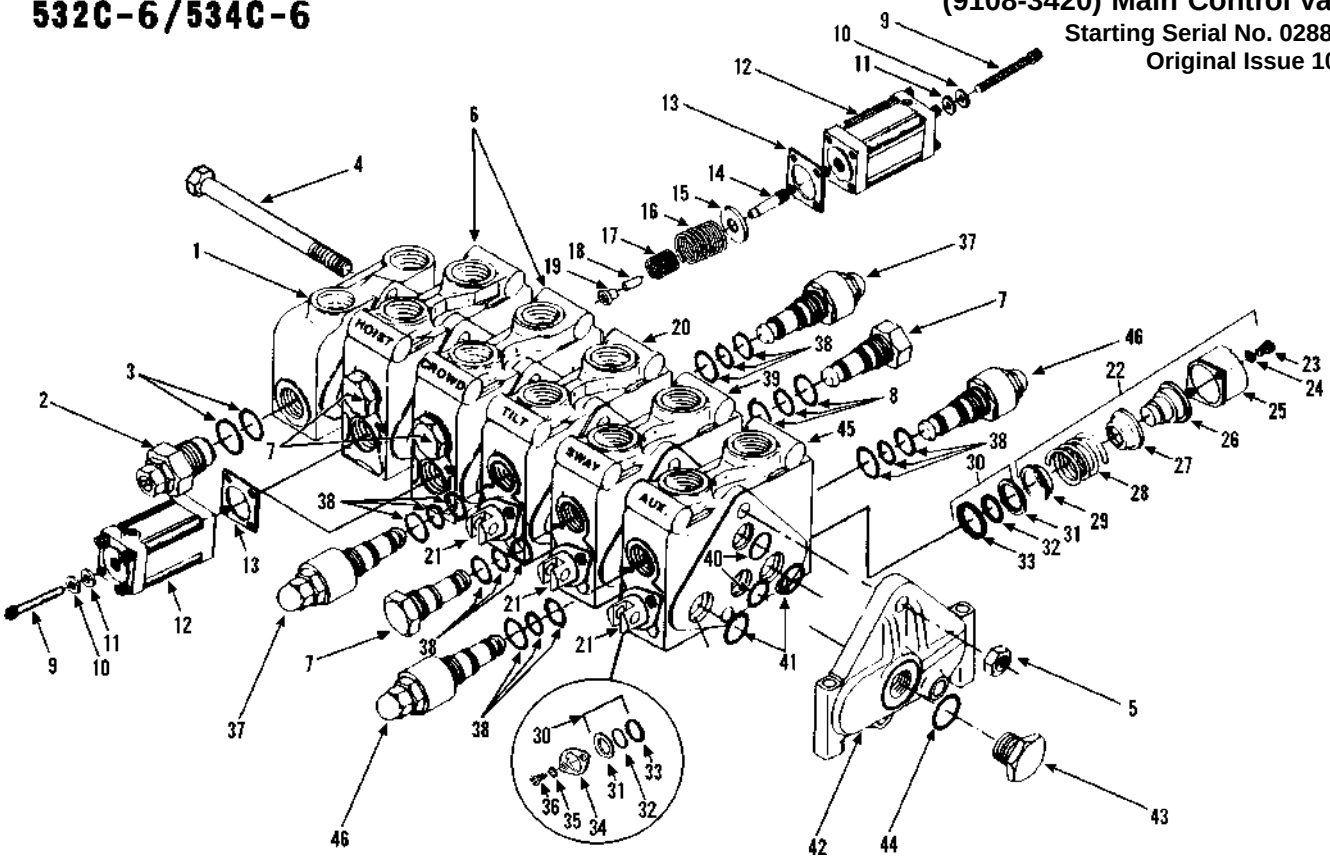

Item	Part No.	Qty.	Description Of Part
	9108-3420	1	MAIN CONTROL VALVE ASSY (includes all items)
	9112-3075	2	SPOOL POSITIONER KIT (includes items 9 thru 19)
	9108-4203	1	STUD KIT (includes items 4 & 5)
	9108-4015	5	VALVE SECTION SEAL KIT (includes items 40 & 41)
1	9108-4008	1	L.H. END COVER ASSY (includes items 2 & 3)
2	9108-4009	1	MAIN RELIEF (includes item 3)
3	9108-4206	1	O-RING (inner)
	9108-4207	1	O-RING (outer)
4		3	STUD
5		3	NUT
6	9108-4277	2	VALVE SECTION ASSY (includes two of item 7, and 9 thru 19)
7	9108-4010	6	LOAD CHECK PLUG (includes item 8)
8	9108-4202	6	LOAD CHECK PLUG SEAL KIT (one required per check plug)
9	9108-4230	16	SOCKET HD CAPSCREW, 1/4-20 x 3
10	9108-4231	16	LOCKWASHER, 1/4
11	9108-4232	4	BEARING PLATE
12	9108-4229	4	BONNET
13	9108-4233	4	SEAL
14	9108-4234	2	SPUD POSITIONER
15	9108-4235	2	WASHER
16	9108-4236	2	SPRING
17	9108-4237	2	SPRING
18	9108-4238	2	STOP SLEEVE
19	9108-4239	2	STOP COLLAR
20	9108-4012	1	VALVE SECTION ASSY (includes items 21, 22, 30 & 34, plus two of item 37)
21	9108-4013	3	SPOOL
22	9108-4004	3	SPOOL POSITIONER (includes items 23 thru 29)
23		6	SCREW
24		6	WASHER

Item	Part No.	Qty.	Description Of Part
25		3	BONNET
26		3	POSITIONER
27		3	COLLAR
28		3	SPRING
29		3	COLLAR
30	9108-4005	6	SPOOL SEAL KIT (includes items 31, 32 and 33)
31		6	RETAINER
32		6	WASHER
33		6	SEAL
34	9108-4006	3	SPOOL RETAINER (includes items 35 and 36)
35		6	SCREW
36		6	WASHER
37	9108-4199	2	RELIEF - 2800 psi. (includes item 38)
38	9108-4201	4	RELIEF SEAL KIT (one required per relief)
	9108-4200	AR	RELIEF SERVICE KIT (not illustrated)(includes relief poppet and piston ring)
39	9108-4014	1	VALVE SECTION ASSY (includes two of item 7, and items 21, 22, 30 and 34)
40		2	PRESSURE SEAL
41		2	PRESSURE SEAL
42	9108-4278	1	R.H. END COVER ASSY (includes item 43)
43	9108-4279	1	PLUG (includes item 44)
44		1	O-RING
45	9108-4280	1	VALVE SECTION ASSY (includes items 21, 22, 30, 34 and 44)
46	9108-4281	2	RELIEF - 2000 psi. (includes item 38)
			NOTE: ONLY ITEMS WITH PART NUMBERS ARE AVAILABLE FOR SERVICE.

** Revised pressure settings*

HYDRAULIC COMPONENTS
(9108-3401) Rear Drive Motor

Starting Serial No. 0188002
Original Issue 1-90
Revised 9-8-00

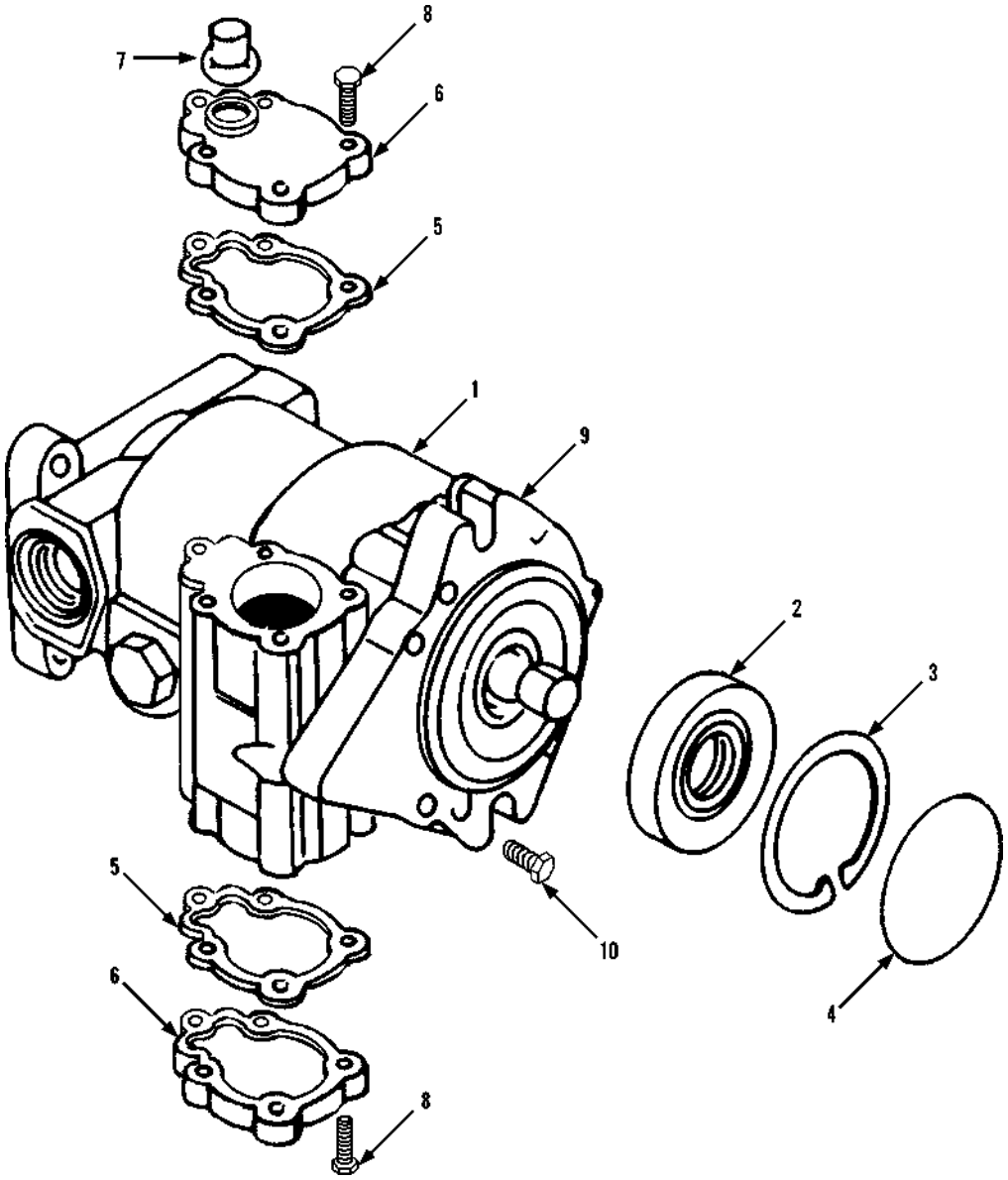

Item	Part No.	Qty.	Description Of Part
1	9108-3401	1	REAR DRIVE MOTOR, (includes all items)
	9108-4358		SEAL KIT
2	9108-4214	1	LIP SEAL
3	9108-4215	2	RETAINING RING
4	9002-3155	1	O-RING
5	9108-4365	2	GASKET
6	9108-4364	2	5 BOLT COVER
7	9108-4366	1	PLUG
8		10	BOLT, (torque to 4 ft. lbs.)
9	9108-4367	1	7 BOLT COVER
10		7	BOLT
			NOTE: ONLY ITEMS WITH PART NUMBERS ARE AVAILABLE FOR SERVICE

** Revised illustration and parts list.*

HYDRAULIC COMPONENTS
(9103-3240) Priority Flow Control Valve

Starting Serial No. 0188002
Original Issue 1-90
Revised 10-10-95

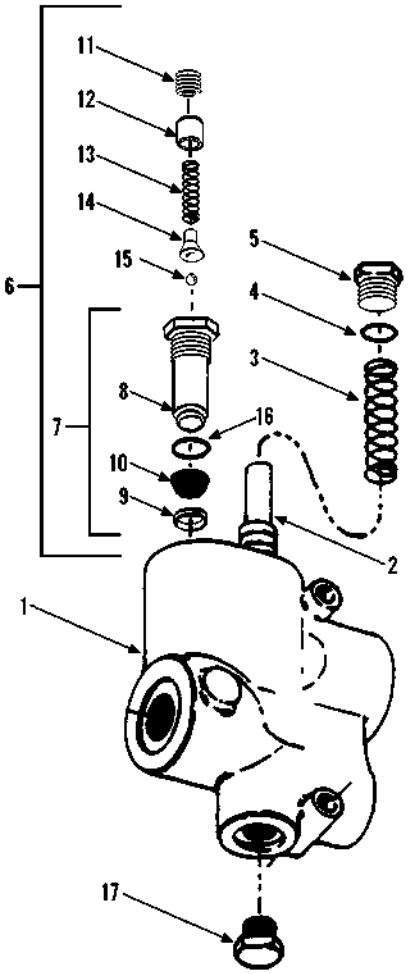

Item	Part No.	Qty.	Description Of Part
	9103-3240	1	PRIORITY FLOW CONTROL VALVE ASSY (includes all items) (2500 PSI relief setting)
1	9020-6548	1	HOUSING (includes item 2)
2	9020-6549	1	SPOOL
3	9020-6550	1	SPRING
4	8859-1206	1	O-RING
5	9020-6552	1	PLUG
6	9020-6553	1	RELIEF CARTRIDGE (includes items 7 thru 16)
7	9020-6554	1	RELIEF VALVE SUB BODY (includes items 8 thru 10)
8	9020-6555	1	BODY
9	9020-6556	1	RING
10	9020-6557	1	SCREEN
11	9020-6558	1	RELIEF VALVE ADJUSTING SCREW
12	9020-6559	1	SPRING GUIDE
13	9020-6560	1	SPRING
14	9020-6561	1	BALL HOLDER
15	9021-6562	1	BALL
16	8859-1205	1	O-RING
17	9020-6564	1	PLUG

** Changed upper left to designate model more clearly.*

HYDRAULIC COMPONENTS
(9108-3292) Flow Divider Valve

Starting Serial No. 0188002
Original Issue 1-90
Revised 3-6-96

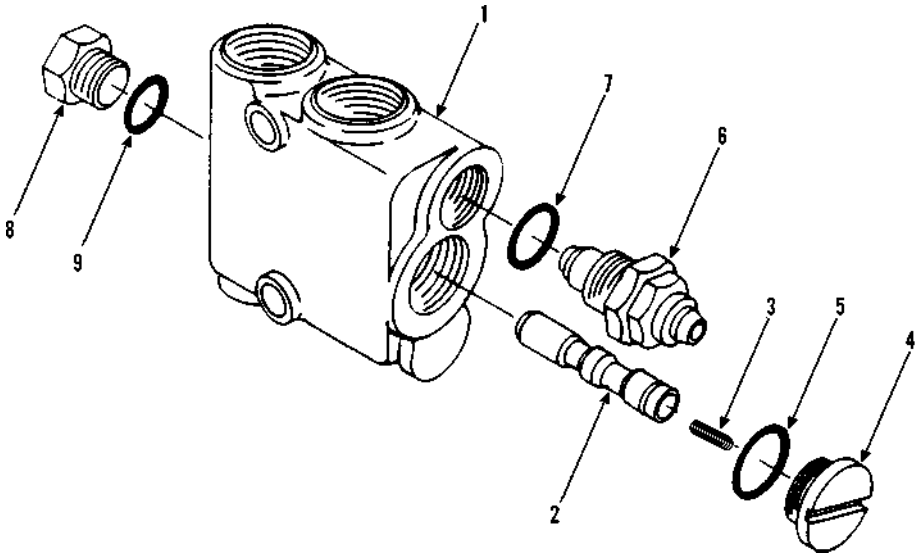

Item	Part No.	Qty.	Description Of Part
1	9108-3292	1	FLOW DIVIDER VALVE - 850 PSI (includes all items)
2	9108-4155	1	SPOOL
3	9108-4156	1	SPRING
4	9108-4160	1	PLUG (includes item 5)
5	9108-4158	1	O-RING
6	9108-4159	1	RELIEF (includes item 7)
7		1	O-RING
8	9108-4157	1	PLUG (includes item 9)
9	9108-4161	1	O-RING

* *Added PSI setting.*

HYDRAULIC COMPONENTS
(9108-3521) Flow Divider Valve
Starting Serial No. 0388247
Original Issue 3-96

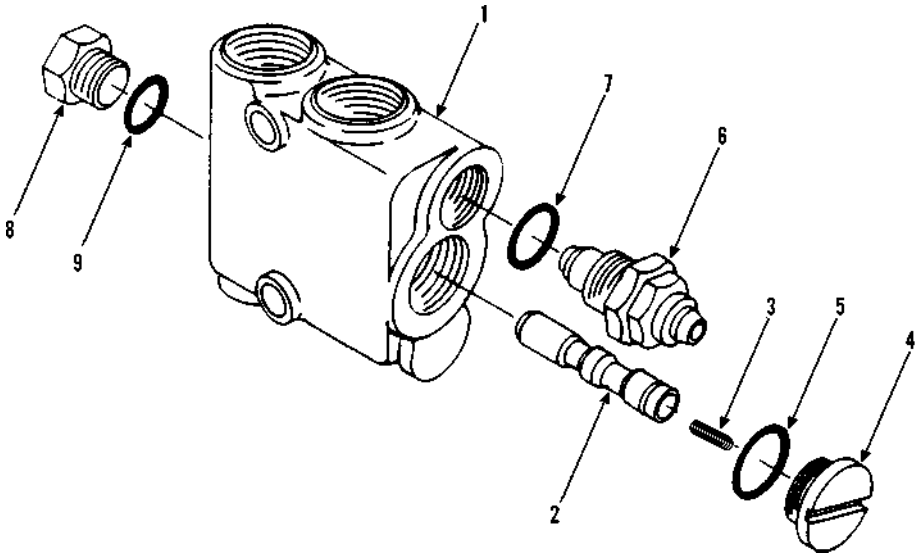

Item	Part No.	Qty.	Description Of Part
1	9108-3521	1	FLOW DIVIDER VALVE - 625 PSI (includes all items)
2	9108-4155	1	SPOOL
3	9108-4156	1	SPRING
4	9108-4160	1	PLUG (includes item 5)
5	9108-4158	1	O-RING
6	9108-4159	1	RELIEF (includes item 7)
7		1	O-RING
8	9108-4157	1	PLUG (includes item 9)
9	9108-4161	1	O-RING

HYDRAULIC COMPONENTS
(9112-3131) Brake Valve

Starting Serial No. 0188002
Original Issue 1-90
Revised 3-6-96

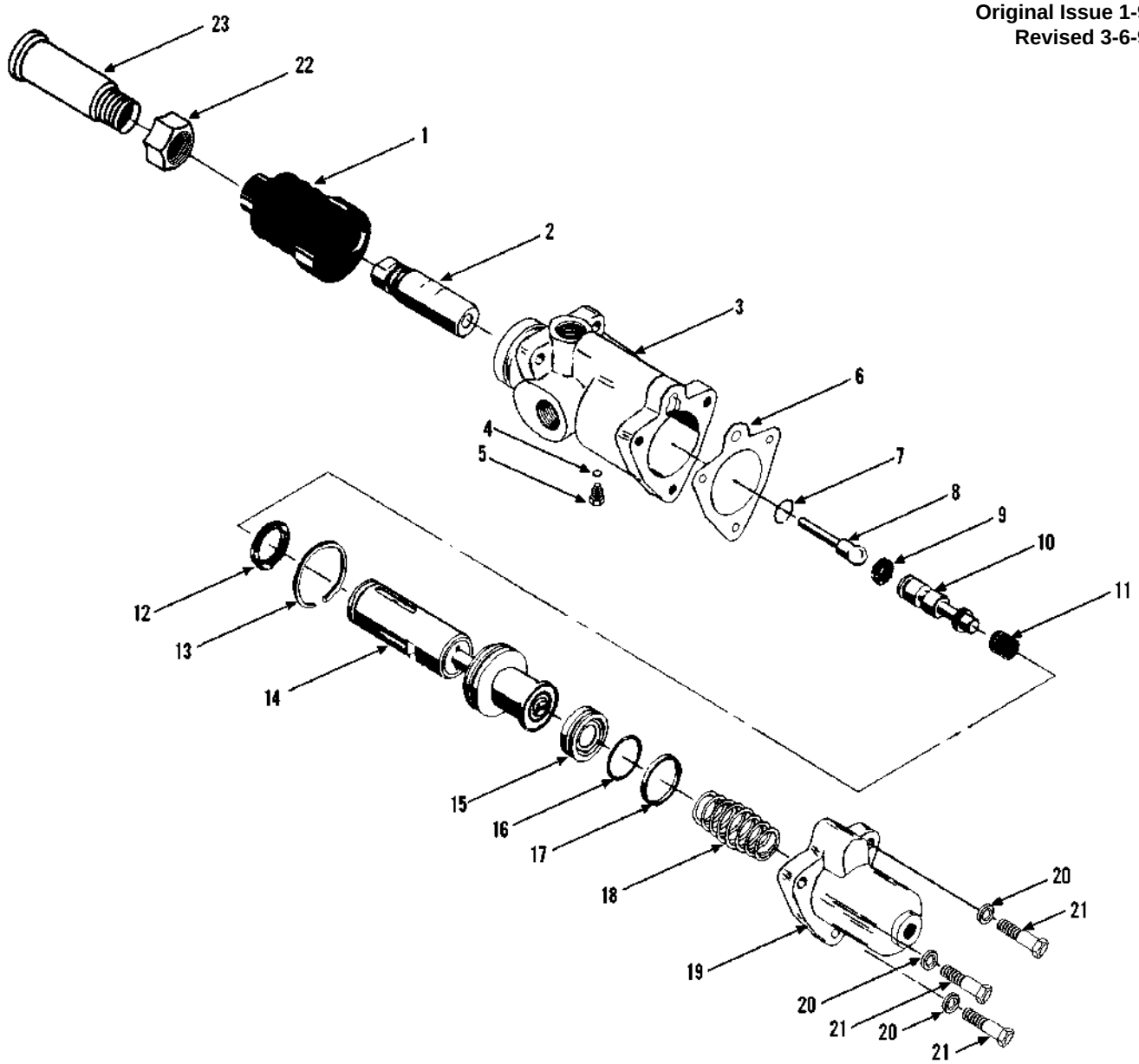

Item	Part No.	Qty.	Description Of Part
	9108-3294	1	DISCONTINUED - POWER BRAKE VALVE, ORDER P/N 9112-3131 (service items interchange)
	9112-3131	1	POWER BRAKE VALVE (includes items 1 thru 21)
	9108-4043	1	REPAIR KIT (includes items 1, 4, 6, 9, 12, 13, 15, 16 & 17)
1	9108-4042	1	BOOT
2		1	PRESSURE REGULATING SPRING ASSY
3		1	HOUSING
4		1	O-RING
5		1	CAPSCREW
6		1	GASKET
7		1	RETAINING RING
8		1	PUSH ROD
9		1	CUP
10		1	SPOOL (not available for service, order 9112-3131)

Item	Part No.	Qty.	Description Of Part
11		1	SPRING
12		1	CUP
13		1	PISTON RING
14		1	SLEEVE & PISTON ASSY
15		1	PISTON & POPPET ASSY
16		1	O-RING
17		1	RING SEAL
18		1	SPRING
19		1	END CAP
20		3	LOCKWASHER
21		3	HEX HD CAPSCREW
22	8850-1408	1	HEX JAM NUT, 1/2-20
23	9108-1445	1	PUSH ROD
			NOTE: ONLY ITEMS WITH PART NUMBERS ARE AVAILABLE FOR SERVICE.

** Removed description of residual valve on item 19 and corrected parts list.*

HYDRAULIC COMPONENTS
(9114-3201) Brake Valve
Starting Serial No. 0388247
Original Issue 3-96

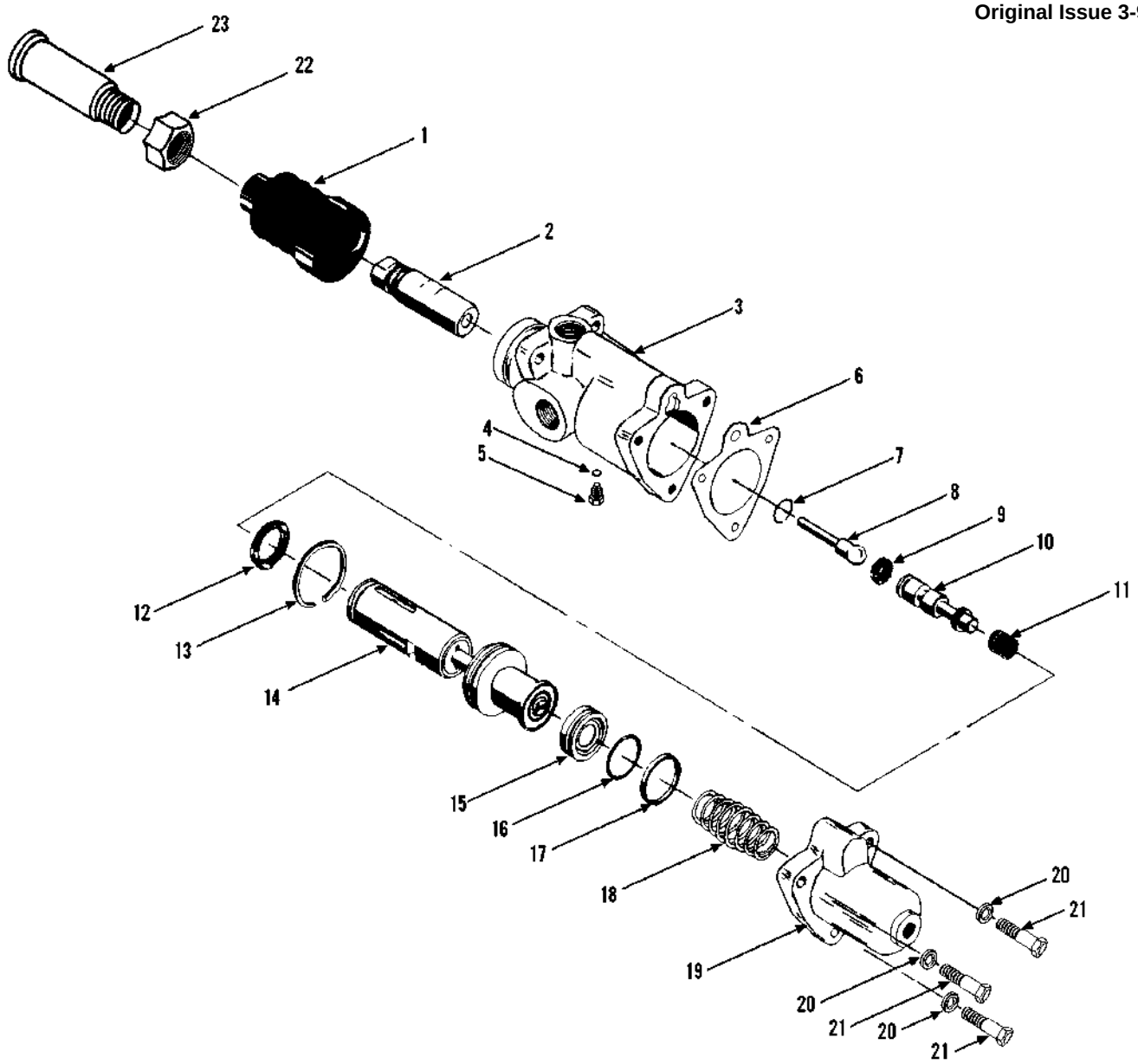

Item	Part No.	Qty.	Description Of Part
	9114-3201	1	POWER BRAKE VALVE (includes items 1 thru 21)
	9108-4043	1	REPAIR KIT (includes items 1, 4, 6, 9, 12, 13, 15, 16 & 17)
1	9108-4042	1	BOOT
2		1	PRESSURE REGULATING SPRING ASSY
3		1	HOUSING
4		1	O-RING
5		1	CAPSCREW
6		1	GASKET
7		1	RETAINING RING
8		1	PUSH ROD
9		1	CUP
10		1	SPOOL (not available for service, order 9114-3201)

Item	Part No.	Qty.	Description Of Part
11		1	SPRING
12		1	CUP
13		1	PISTON RING
14		1	SLEEVE & PISTON ASSY
15		1	PISTON & POPPET ASSY
16		1	O-RING
17		1	RING SEAL
18		1	SPRING
19		1	END CAP
20		3	LOCKWASHER
21		3	HEX HD CAPSCREW
22	8850-1408	1	HEX JAM NUT, 1/2-20
23	9108-1445	1	PUSH ROD
			NOTE: ONLY ITEMS WITH PART NUMBERS ARE AVAILABLE FOR SERVICE.

HYDRAULIC COMPONENTS
(9020-6739) Solenoid Valve

Starting Serial No. 0188002
Original Issue 1-90
Revised 10-10-95

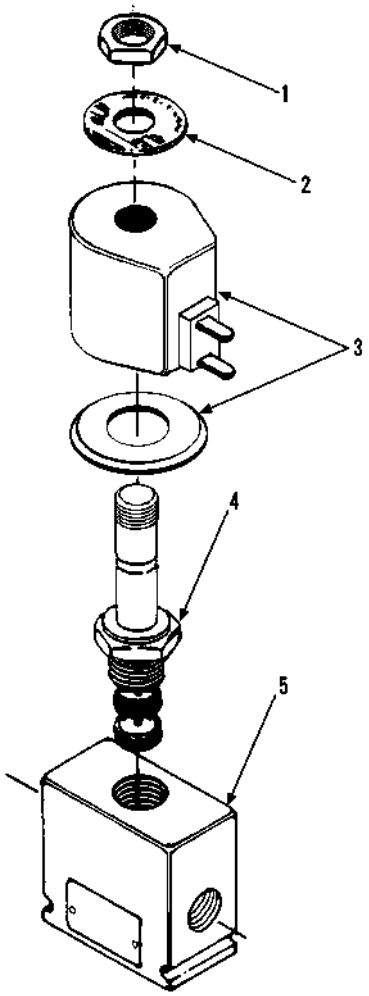

Item	Part No.	Qty.	Description Of Part
	9020-6739	1	3 WAY SOLENOID VALVE (includes all items)
1	9020-8066	1	NUT
2	9020-8067	1	NAME PLATE
3	7738-4267	1	COIL
4	9020-8071	1	VALVE ASSY (3-way-2 pos.)
5	9020-8072	1	VALVE BODY

** Changed upper left to designate model more clearly.*

HYDRAULIC COMPONENTS
(9104-3446) Solenoid Valve
Starting Serial No. 0288777
Original Issue 10-95

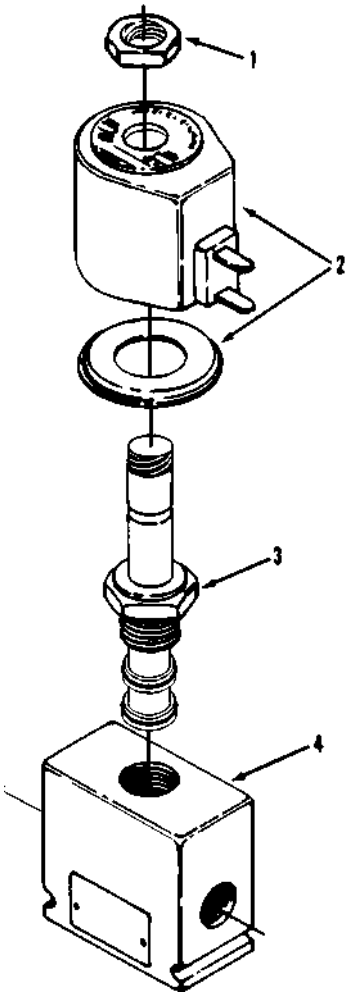

Item	Part No.	Qty.	Description Of Part
	9104-3446	1	3-WAY SOLENOID VALVE(includes all items)
1	9020-8066	1	NUT
2	9114-4158	1	COIL
3	9114-4159	1	CORE ASSY (3-way, 2-position)
4	8093-4035	1	VALVE BODY

HYDRAULIC COMPONENTS
(9108-3262) Dual P.O. Check Valve

Starting Serial No. 0188002
Original Issue 1-90
Revised 10-10-95

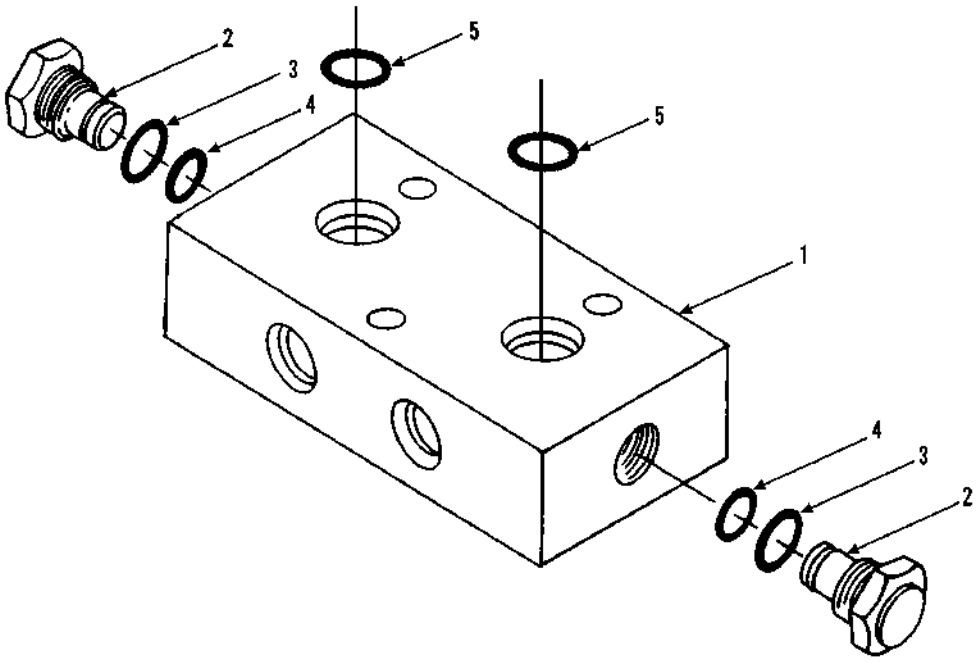

Item	Part No.	Qty.	Description Of Part
	9108-3262	1	DUAL P.O. CHECK VALVE ASSY (includes items 1 thru 4)
	9104-4002	Ref	SEAL KIT (includes items 3 & 4)
1		1	BODY
2	7713-3248	2	CHECK VALVE (Includes items 3 & 4)
3	9108-4227	2	O-RING
4	9108-4228	2	O-RING
* 5	8859-1009	2	O-RING
			NOTE: ONLY ITEMS WITH PART NUMBERS ARE AVAILABLE FOR SERVICE

** Changed upper left to designate model more clearly. Added item 5.*

HYDRAULIC COMPONENTS
(9103-3096) Inching Valve

Starting Serial No. 0188002
Original Issue 1-90
Revised 10-10-95

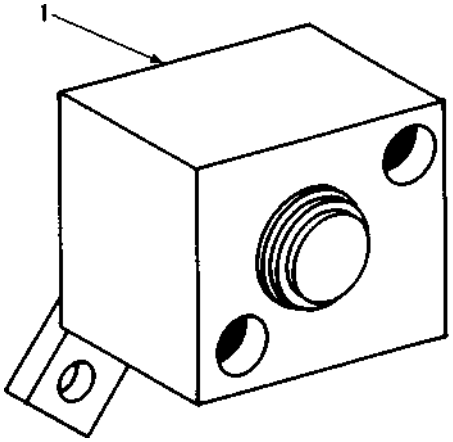

Item	Part No.	Qty.	Description Of Part
1	9103-3096	1	INCHING VALVE
	9103-4018	Ref	SEAL KIT

** Changed upper left to designate model more clearly.*

HYDRAULIC COMPONENTS
(9114-3140) Inching Valve
Starting Serial No. 0388349
Original Issue 6-96

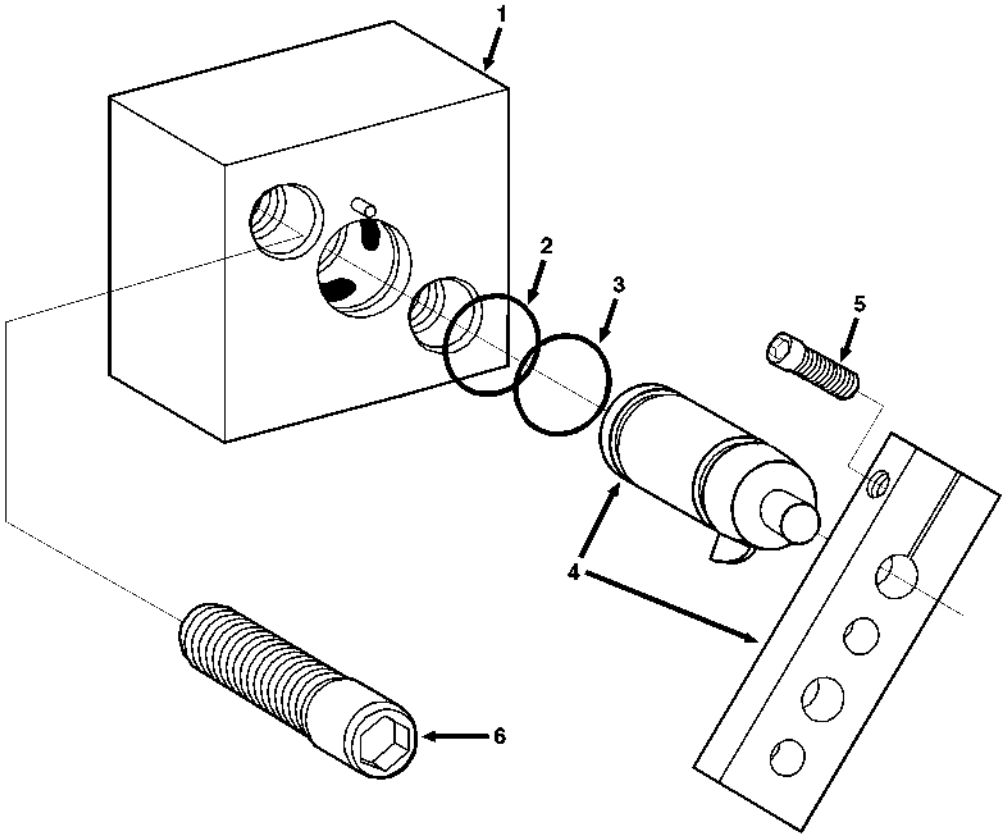

Item	Part No.	Qty.	Description Of Part
1	9114-3140	1	INCHING VALVE (includes all items)
2	8093-4423	1	O-RING
3	8093-4202	1	O-RING
4		1	ACTIVATING LEVER
5		1	SOCKET HD CAPSCREW
6	8821-2228	2	SOCKET HD CAPSCREW
			NOTE: ONLY ITEMS WITH PART NUMBERS ARE AVAILABLE FOR SERVICE.

HYDRAULIC COMPONENTS
(9108-3296) Main Hydraulic Pump

Starting Serial No. 0188002
Original Issue 1-90
Revised 10-10-95

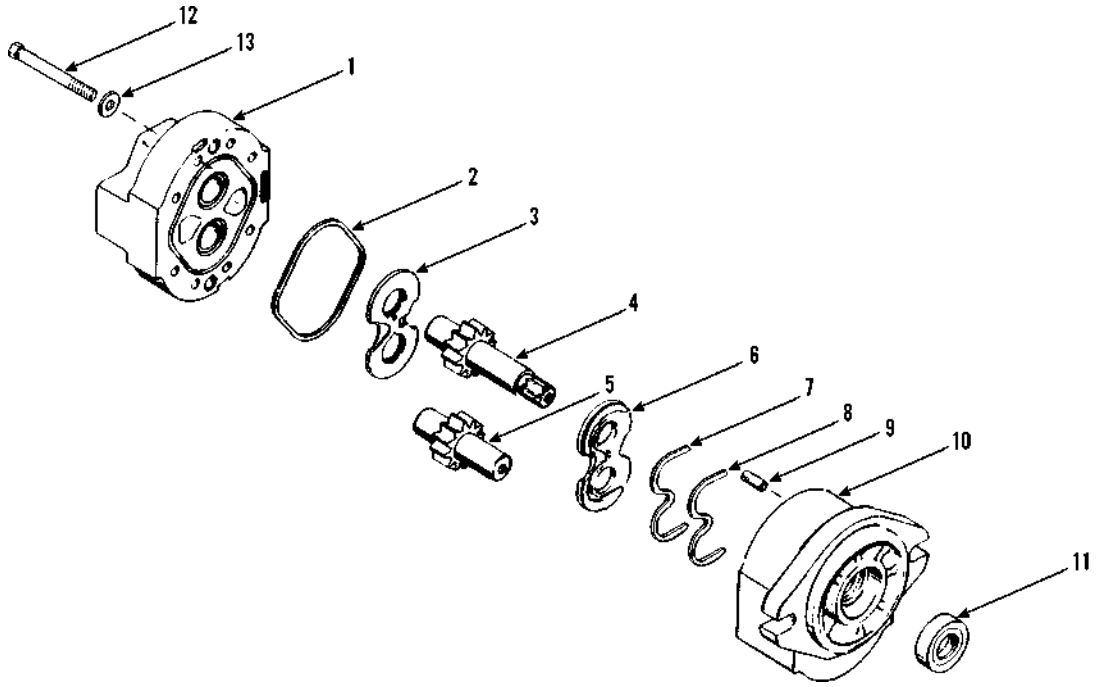

Item	Part No.	Qty.	Description Of Part
	9108-3296	1	MAIN HYDRAULIC PUMP (includes all items)
	9108-4218	1	SEAL KIT (includes items 2, 3, 6, 7, 8 & 11)
1	9108-4144	1	REAR COVER
2	9108-4137	1	SEAL
3	9108-4138	1	THRUST PLATE
4	9108-4146	1	DRIVE GEAR
5	9108-4145	1	DRIVEN GEAR
6	9108-4139	1	WEAR PLATE
7	9108-4140	1	SEAL
8	9108-4142	1	SEAL SPACER
9	9108-4143	2	DOWEL PIN
10	9108-4147	1	BODY
11	9108-4141	1	SHAFT SEAL
12	9108-4135	8	HEX HD CAPSCREW
13	9108-4136	8	FLATWASHER

** Changed upper left to designate model more clearly.*

HYDRAULIC COMPONENTS
(9108-3013) Hydrostatic Transmission Pump

Starting Serial No. 0188002
Original Issue 1-90
Revised 4-2-97

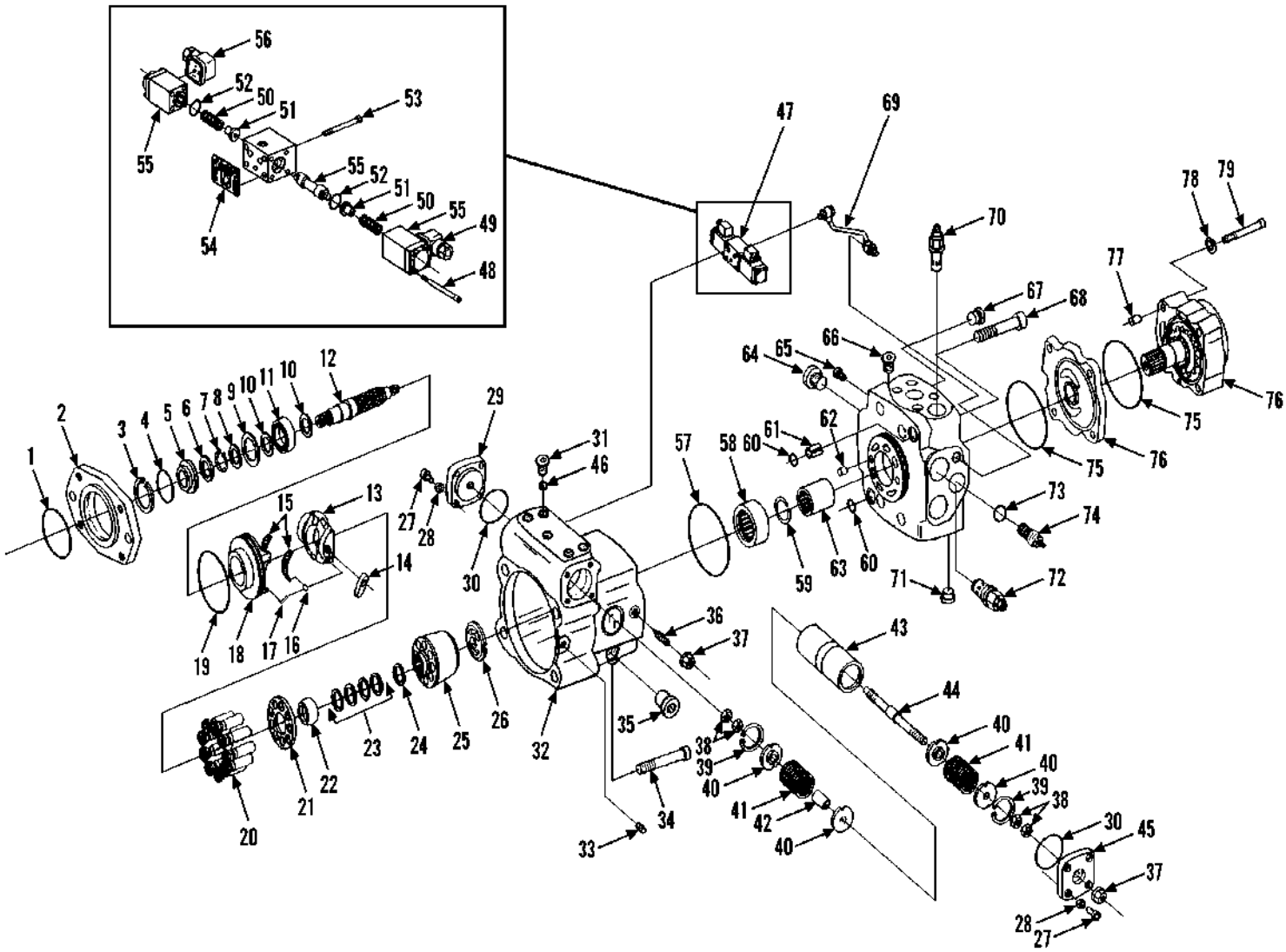

** Removed invalid part number on item 1, this item is available in the seal kit*

HYDRAULIC COMPONENTS
(9108-3013) Hydrostatic Transmission Pump

Starting Serial No. 0188002
Original Issue 1-90
Revised 4-2-97

Item	Part No.	Qty.	Description Of Part
	9108-3013	1	HYDROSTATIC TRANSMISSION PUMP (includes all items)
	9108-4132	1	SEAL KIT (includes items 1, 4, 6, 19, 30, 37, 52, 57, 60, 73 & 75)
	9108-4269	1	ROTARY GROUP KIT (includes items 13, 20, 21, 22, 23, 25 & 26)
	9108-4023	1	ROTARY GROUP ASSY (includes items 3 thru 26, except item 14)
	9108-4270	1	HOUSING ASSY (includes items 27 thru 45)
	9108-4271	1	STROKING PISTON ASSY (includes items 38 thru 44)
	9108-4272	1	PORT BLOCK ASSY (includes items 57 thru 68)
* 1		1	O-RING
2	9108-4024	1	FRONT FLANGE
3		1	RETAINING RING
4		1	O-RING
5		1	FRONT COVER
6		1	SHAFT SEAL
7		1	RETAINING RING
8		1	SHIM
9		1	SHIM
10		2	SUPPORTING DISK
11		1	ROLLER BEARING
12		1	SHAFT
13		1	SWASH PLATE
14	9108-4274	1	SLIDE BLOCK
15		1	CAGE BEARING SET
16		2	BEARING RETAINER BUSHING
17		2	WIRE
18		1	BEARING FLANGE
19		1	O-RING
20		9	PISTON
21		1	RETAINING PLATE
22		1	RETAINING BALL
23		1	BELLEVILLE WASHER SET
24		1	PRELOAD SHIM
25		1	BARREL
26		1	CONTROL PLATE
27		8	SOCKET HD CAPSCREW, M6X12
28		8	LOCKWASHER, M6
29		1	STROKING PISTON COVER
30		2	O-RING
31		5	PLUG
32		1	HOUSING
33		1	TORSION PIN
34		4	SOCKET HD CAPSCREW, M16X80
35		1	PLUG
36	9108-4029	1	ECCENTRIC SCREW
37		2	SEAL LOCKNUT, M12X1.5
38		4	JAM NUT, M12X1.5

Item	Part No.	Qty.	Description Of Part
39		2	O-RING
40		4	SPRING COLLAR W/BUSHING
41		2	SPRING
42		1	SPACER BUSHING
43		1	PISTON
44		1	PISTON ROD
45		1	STROKING PISTON COVER
46	8093-4416	2	STROKING TIME ORIFICE
47	9108-4036	1	CONTROL VALVE ASSY (includes items 48 thru 56)
48		8	SOCKET HD CAPSCREW, M4X65
49	9108-4038	1	PLUG IN CONNECTOR (solenoid B-Blk)
50		2	SPRING
51		2	SPRING RETAINER
52		2	O-RING
53		4	SOCKET HD CAPSCREW, M6X45
54	9108-4134	1	CONTROL MODULE GASKET
55	9108-4316	2	SOLENOID
56	9108-4039	1	PLUG IN CONNECTOR (solenoid A-Gray)
57		1	O-RING
58		1	REAR SHAFT BEARING
59		1	RETAINING RING
60		2	O-RING
61		1	SPRING PIN
62		1	PIN
63		1	PUMP COUPLING
64		2	PLUG
65		2	PRESSURE OVERRIDE VALVE
66		1	PLUG
67		2	PLUG
68		4	SOCKET HD CAPSCREW, M16X90
*69	9108-4035	1	CONTROL PIPE KIT (includes fittings)
70	9108-4031	1	RELIEF VALVE
71	8866-2195	1	PLUG
72	9108-4032	2	HIGH PRESSURE RELIEF VALVE (5000 PSI)
73	9108-4276	1	O-RING
74	9108-4033	1	CONTROL CARTRIDGE
75		2	O-RING
76	9108-4034	1	CHARGE PUMP ASSY (includes items 75, 77, 78 & 79)
77		2	PIN
78		4	LOCKWASHER, M8
79		4	SOCKET HD CAPSCREW, M8X50

NOTE: ONLY ITEMS WITH PART NUMBERS ARE AVAILABLE FOR SERVICE.

** Removed invalid part number on item 1, this item is available in the seal kit*

HYDRAULIC COMPONENTS
(9108-3461) Hydrostatic Transmission Pump

Starting Serial No. 0288568
Original Issue 6-95
Revised 4-2-97

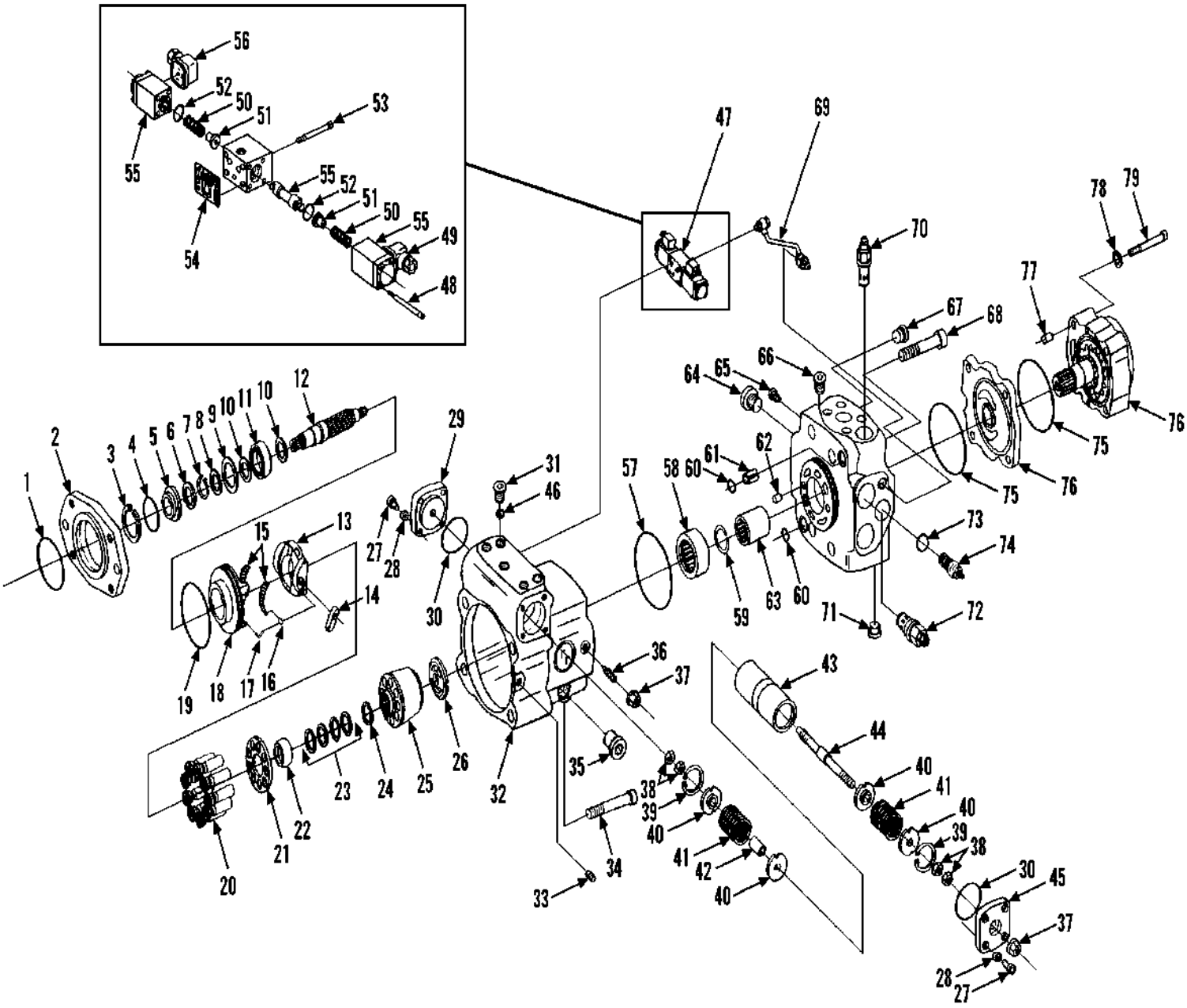

** Removed invalid part number on item 1, this item is available in the seal kit*

HYDRAULIC COMPONENTS
(9108-3461) Hydrostatic Transmission Pump

Starting Serial No. 0288568
Original Issue 6-95
Revised 4-2-97

Item	Part No.	Qty.	Description Of Part
	9108-3461	1	HYDROSTATIC TRANSMISSION PUMP (includes all items)
	9108-4132	1	SEAL KIT (includes items 1, 4, 6, 19, 30, 37, 52, 57, 60, 73 & 75)
	9108-4269	1	ROTARY GROUP KIT (includes items 13, 20, 21, 22, 23, 25 & 26)
	9108-4023	1	ROTARY GROUP ASSY (includes items 3 thru 26, except item 14)
	9108-4270	1	HOUSING ASSY (includes items 27 thru 45)
	9108-4271	1	STROKING PISTON ASSY (includes items 38 thru 44)
	9108-4272	1	PORT BLOCK ASSY (includes items 57 thru 68)
* 1		1	O-RING
2	9108-4024	1	FRONT FLANGE
3		1	RETAINING RING
4		1	O-RING
5		1	FRONT COVER
6		1	SHAFT SEAL
7		1	RETAINING RING
8		1	SHIM
9		1	SHIM
10		2	SUPPORTING DISK
11		1	ROLLER BEARING
12		1	SHAFT
13		1	SWASH PLATE
14	9108-4274	1	SLIDE BLOCK
15		1	CAGE BEARING SET
16		2	BEARING RETAINER BUSHING
17		2	WIRE
18		1	BEARING FLANGE
19		1	O-RING
20		9	PISTON
21		1	RETAINING PLATE
22		1	RETAINING BALL
23		1	BELLEVILLE WASHER SET
24		1	PRELOAD SHIM
25		1	BARREL
26		1	CONTROL PLATE
27		8	SOCKET HD CAPSCREW, M6X12
28		8	LOCKWASHER, M6
29		1	STROKING PISTON COVER
30		2	O-RING
31		5	PLUG
32		1	HOUSING
33		1	TORSION PIN
34		4	SOCKET HD CAPSCREW, M16X80
35		1	PLUG
36	9108-4029	1	ECCENTRIC SCREW
37		2	SEAL LOCKNUT, M12X1.5
38		4	JAM NUT, M12X1.5

Item	Part No.	Qty.	Description Of Part
39		2	O-RING
40		4	SPRING COLLAR W/BUSHING
41		2	SPRING
42		1	SPACER BUSHING
43		1	PISTON
44		1	PISTON ROD
45		1	STROKING PISTON COVER
46	8093-4416	2	STROKING TIME ORIFICE
47	9108-4036	1	CONTROL VALVE ASSY (includes items 48 thru 56)
48		8	SOCKET HD CAPSCREW, M4X65
49	9108-4038	1	PLUG IN CONNECTOR (solenoid B-Blk)
50		2	SPRING
51		2	SPRING RETAINER
52		2	O-RING
53		4	SOCKET HD CAPSCREW, M6X45
54	9108-4134	1	CONTROL MODULE GASKET
55	9108-4316	2	SOLENOID
56	9108-4039	1	PLUG IN CONNECTOR (solenoid A-Gray)
57		1	O-RING
58		1	REAR SHAFT BEARING
59		1	RETAINING RING
60		2	O-RING
61		1	SPRING PIN
62		1	PIN
63		1	PUMP COUPLING
64		2	PLUG
65		2	PRESSURE OVERRIDE VALVE
66		1	PLUG
67		2	PLUG
68		4	SOCKET HD CAPSCREW, M16X90
*69	9108-4035	1	CONTROL PIPE KIT (includes fittings)
70	9108-4031	1	RELIEF VALVE
71	8866-2195	1	PLUG
72	9108-4032	2	HIGH PRESSURE RELIEF VALVE (5500 PSI)
73	9108-4276	1	O-RING
74	9108-4033	1	CONTROL CARTRIDGE
75		2	O-RING
76	9108-4034	1	CHARGE PUMP ASSY (includes items 75, 77, 78 & 79)
77		2	PIN
78		4	LOCKWASHER, M8
79		4	SOCKET HD CAPSCREW, M8X50

NOTE: ONLY ITEMS WITH PART NUMBERS ARE AVAILABLE FOR SERVICE.

** Removed invalid part number on item 1, this item is available in the seal kit*

HYDRAULIC COMPONENTS
(9108-3499) Hydrostatic Transmission Pump

Starting Serial No. 0388349
Original Issue 5-96
Revised 1-17-07

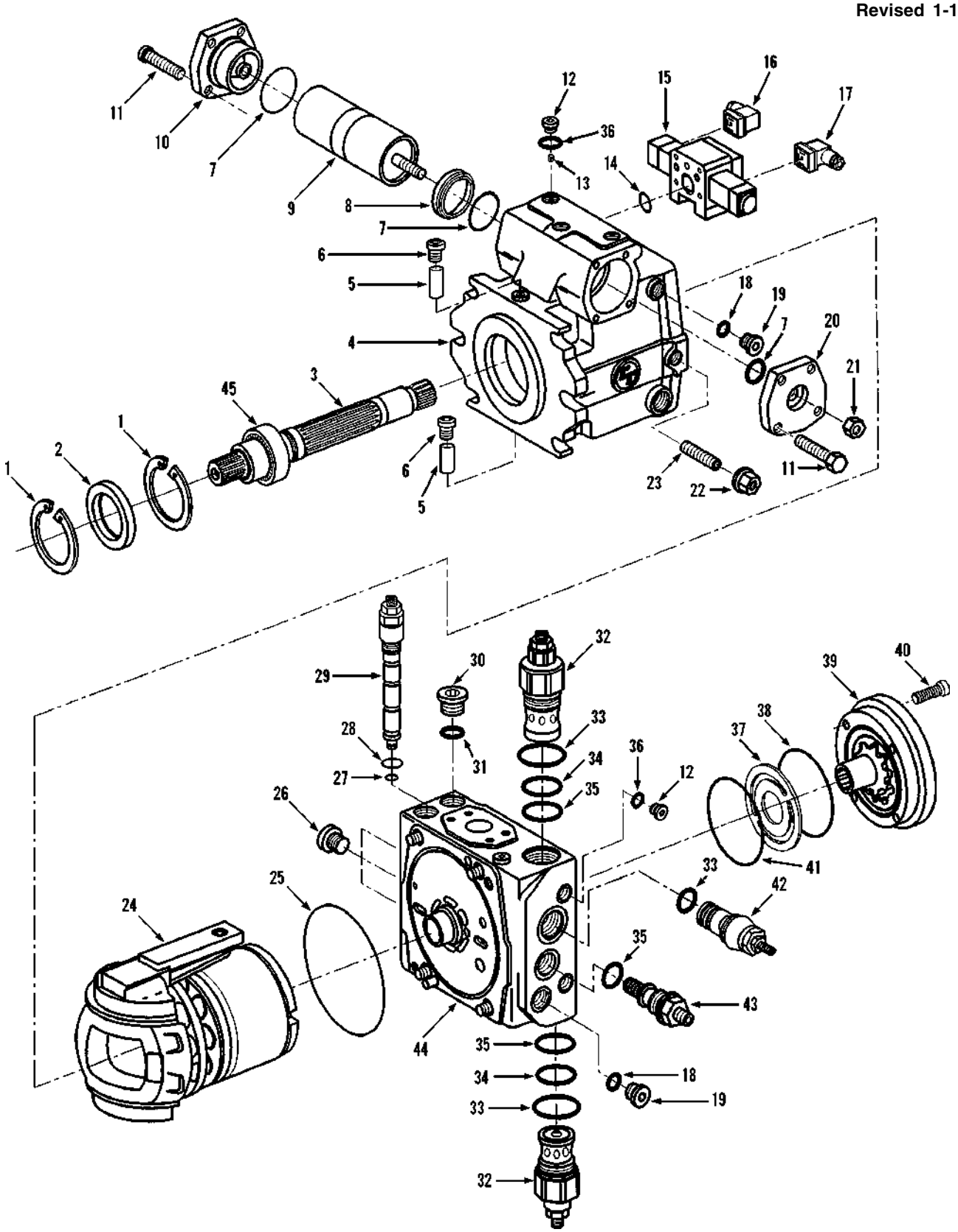

HYDRAULIC COMPONENTS
(9108-3499) Hydrostatic Transmission Pump

Starting Serial No. 0388349
Original Issue 5-96
Revised 1-17-07

Item	Part No.	Qty.	Description Of Part
	9108-3499	1	HYDROSTATIC TRANSMISSION PUMP (includes all items)
	9108-4317	AR	SEAL KIT (includes items 2, 6, 7, 14, 15, 22, 25, 27, 28, 31, 32, 33, 34, 35, 36, 38, 41 plus additional items not illustrated)
1	8093-4052	2	SNAP RING
* 2	9108-4389	1	SHAFT SEAL
3	9108-4318	1	SHAFT ASSY
4	9108-4319	1	HOUSING ASSY
5	9108-4320	2	PIN
6		4	PLUG
7		4	O-RING
8	9108-4321	2	BUSHING
9	9108-4322	1	STROKING PISTON ASSY
10	9108-4323	1	STROKING PISTON COVER KIT (includes items 7 & 11)
11	8093-4077	8	CAPSCREW, M8X20
12	8093-4084	5	PLUG (includes item 36)
13	9114-4093	2	STROKING ORIFICE
14		1	O-RING
15	9108-4324	1	DA CONTROL ASSY (includes items 16 & 17)
16	9108-4038	1	HERSHMAN CONNECTOR (black)
17	9108-4039	1	HERSHMAN CONNECTOR (gray)
18		2	O-RING
19	8093-4082	2	PLUG (includes item 18)
20	9108-4325	1	STROKING PISTON COVER KIT (includes items 7 & 11)
21	9114-4094	1	JAM NUT
22		1	SEAL NUT

Item	Part No.	Qty.	Description Of Part
23	9114-4095	1	ECCENTRIC SCREW
24	9108-4326	1	ROTARY GROUP ASSY
25		1	O-RING
26	9108-4327	3	PLUG
27		1	O-RING
28		1	O-RING
29	9108-4328	1	POR ASSY (includes items 27 & 28)
30	8093-4340	1	PLUG (includes item 31)
31		1	O-RING
32	9108-4032	2	RELIEF VALVE (includes one each of items 33 thru 35)
33		3	O-RING
34		2	O-RING
35		3	O-RING
36		5	O-RING
37	9108-4329	1	WEAR PLATE
38		1	O-RING
39	9108-4330	1	CHARGE PUMP ASSY (includes items 37, 38, 40 & 41)
40	9108-4331	4	CAPSCREW, M12X35
41		1	O-RING
42	9114-4099	1	DA CARTRIDGE ASSY
43	9114-4098	1	CHARGE PRESSURE RELIEF VALVE (includes item 35)
44	9108-4332	1	PORT BLOCK ASSY (includes items 25, 26, 27, 28 & 29)
* 45	9108-4390	1	ROLLER BEARING
			NOTE: ONLY ITEMS WITH PART NUMBERS ARE AVAILABLE FOR SERVICE.

** Added part number to item 2 and added item 45.*

HYDRAULIC COMPONENTS
(9109-3002) Front Drive Motor (532C-6)

Starting Serial No. 0188002
Original Issue 1-90
Revised 9-6-95

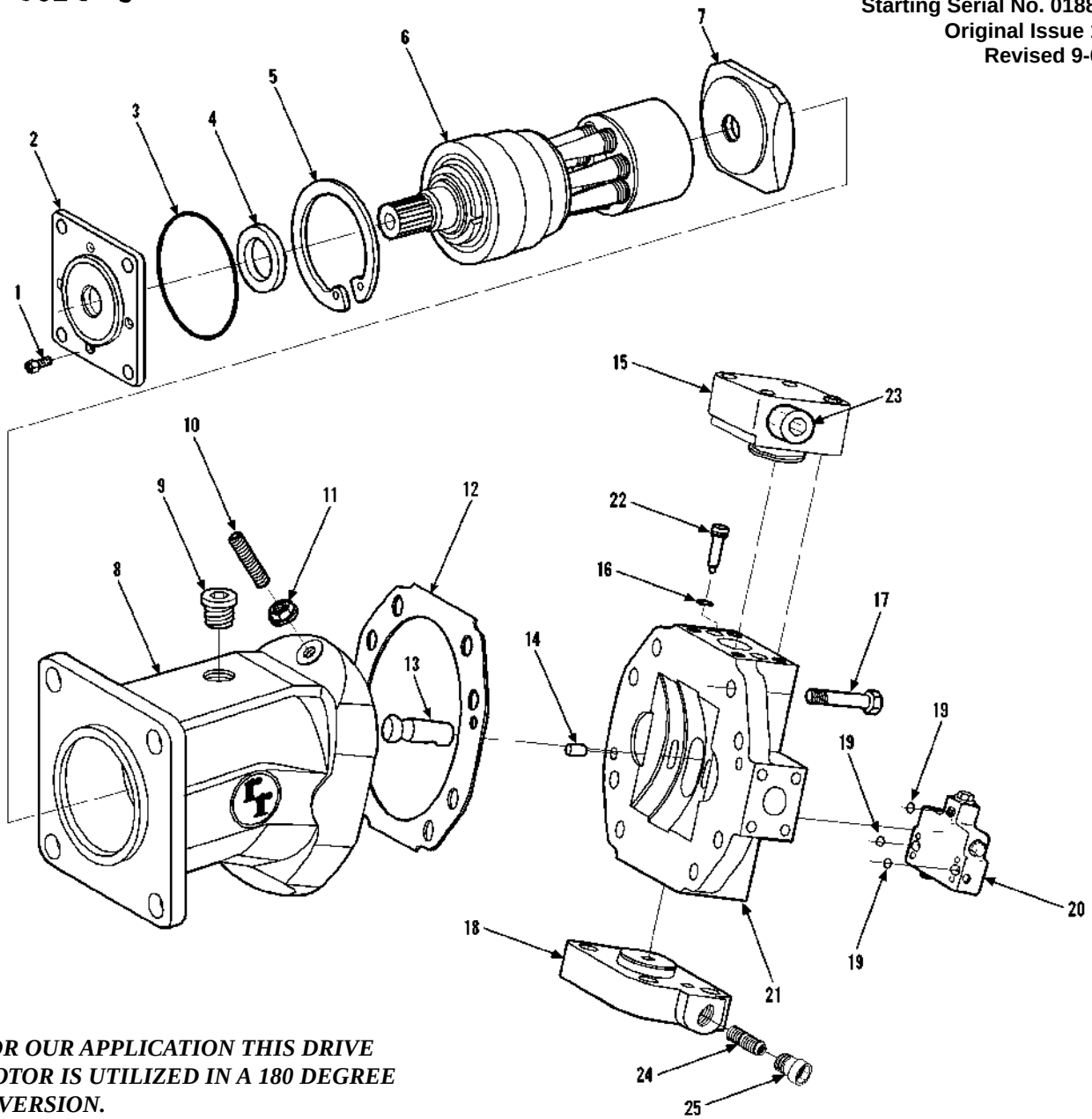

FOR OUR APPLICATION THIS DRIVE MOTOR IS UTILIZED IN A 180 DEGREE INVERSION.

Item	Part No.	Qty.	Description Of Part
	9109-3002	1	FRONT DRIVE MOTOR ASSY (includes all items)
	9114-4152	1	FRONT DRIVE MOTOR SEAL KIT
1		4	CAPSCREW, M8X16
2	9108-4314	1	FRONT COVER
3		1	O-RING (included in seal kit)
4		1	SHAFT SEAL (included in seal kit)
5		1	SNAP RING
6	9114-4150	1	ROTARY GROUP (includes item 5)
7	9108-4315	1	CONTROL LENS
8	9114-4149	1	HOUSING
9		1	PLUG
10		1	STOP SCREW
11		1	SEAL NUT (included in seal kit)
12		1	GASKET (included in seal kit)
13		1	SWIVEL TRUNNION (included with item 21)
14		1	DOWEL PIN (included with item 21)

Item	Part No.	Qty.	Description Of Part
15	9114-4153	1	DA CONTROL ASSY (includes item 23)
16		3	O-RING (included with item 21)
17		8	CAPSCREW (included with item 21)
18	9114-4157	1	STROKING PISTON COVER (includes item 25)
19		3	O-RING (included in seal kit)
20	9109-4021	1	FLUSHING VALVE
21	9114-4151	1	PORTING BLOCK ASSY (includes items 13, 14, 16 & 17)
22	8392-4135	2	CHECK VALVE KIT
23	9114-4248	2	FITTING
24	8392-4123	1	SHUTTLE ORIFICE KIT
25		1	PLUG (included with item 18)
			NOTE: ONLY ITEMS WITH PART NUMBERS ARE AVAILABLE FOR SERVICE.

** Art & Parts list completely redone.*

HYDRAULIC COMPONENTS
(9109-3016) Front Drive Motor (532C-6)
Starting Serial No. 0388349
Original Issue 5-96

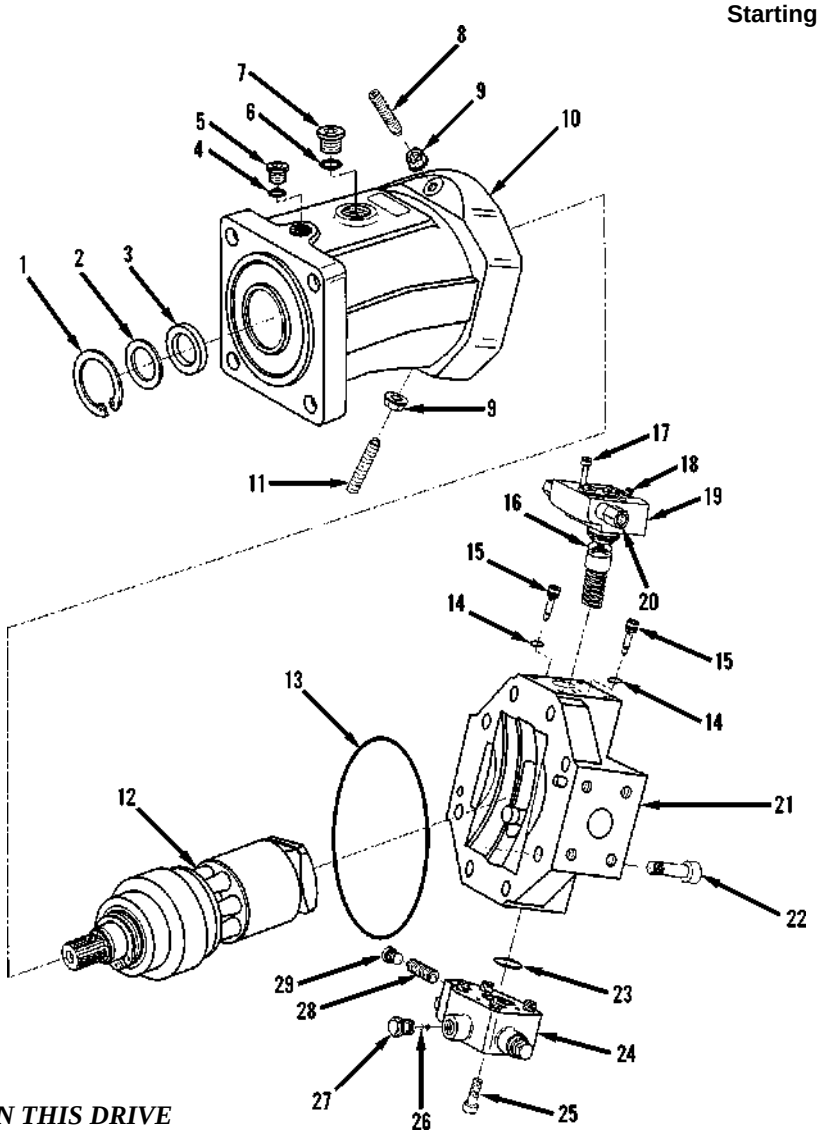

FOR OUR APPLICATION THIS DRIVE MOTOR IS UTILIZED IN A 180 DEGREE INVERSION.

Item	Part No.	Qty.	Description Of Part
	9109-3016	1	FRONT DRIVE MOTOR ASSY (includes all items)
	9109-4025	AR	SEAL KIT (includes items 3,4, 6, 9, 13, 14, 16, 18, 23)
1	9109-4026	1	SNAP RING
2	9109-4027	1	SHIM
3		1	SHAFT SEAL
4		1	O-RING
5	9109-4028	1	PLUG (includes item 5)
6		1	O-RING
7	9109-4029	1	PLUG (includes item 6)
8	8091-4241	1	STOP SCREW, M12X90
9		2	SEAL NUT
10	9109-4030	1	HOUSING
11	9109-4031	1	STOP SCREW, M12X80
12	9109-4032	1	ROTARY GROUP
13		1	O-RING
14		6	O-RING
15	8091-4235	2	CHECK VALVE KIT (includes o-rings)
16		1	O-RING

Item	Part No.	Qty.	Description Of Part
17	8093-4080	4	CAPSCREW
18		1	SEAL NUT
19	9109-4033	1	DA1 CONTROL KIT (includes items 16, 17, 18 & 20)
20	9114-4248	2	FITTING
21	9109-4034	1	REAR COVER ASSY (includes item 22)
22	9109-4035	8	CAPSCREW, M16X45
23		1	O-RING
24	9109-4036	1	FLUSHING VALVE ASSY (includes items 23, 25, 27 & 29)
25	9109-4037	4	CAPSCREW, M8X50
26	9109-4038	1	FLUSHING ORIFICE
27	9109-4039	1	PLUG
28	8392-4123	1	SWIVEL TIME ORIFICE
29	9109-4040	2	PLUG
			NOTE: ONLY ITEMS WITH PART NUMBERS ARE AVAILABLE FOR SERVICE.

HYDRAULIC COMPONENTS
(9108-3044) Front Drive Motor (534C-6)

Starting Serial No. 0188002
Original Issue 1-90
Revised 9-6-95

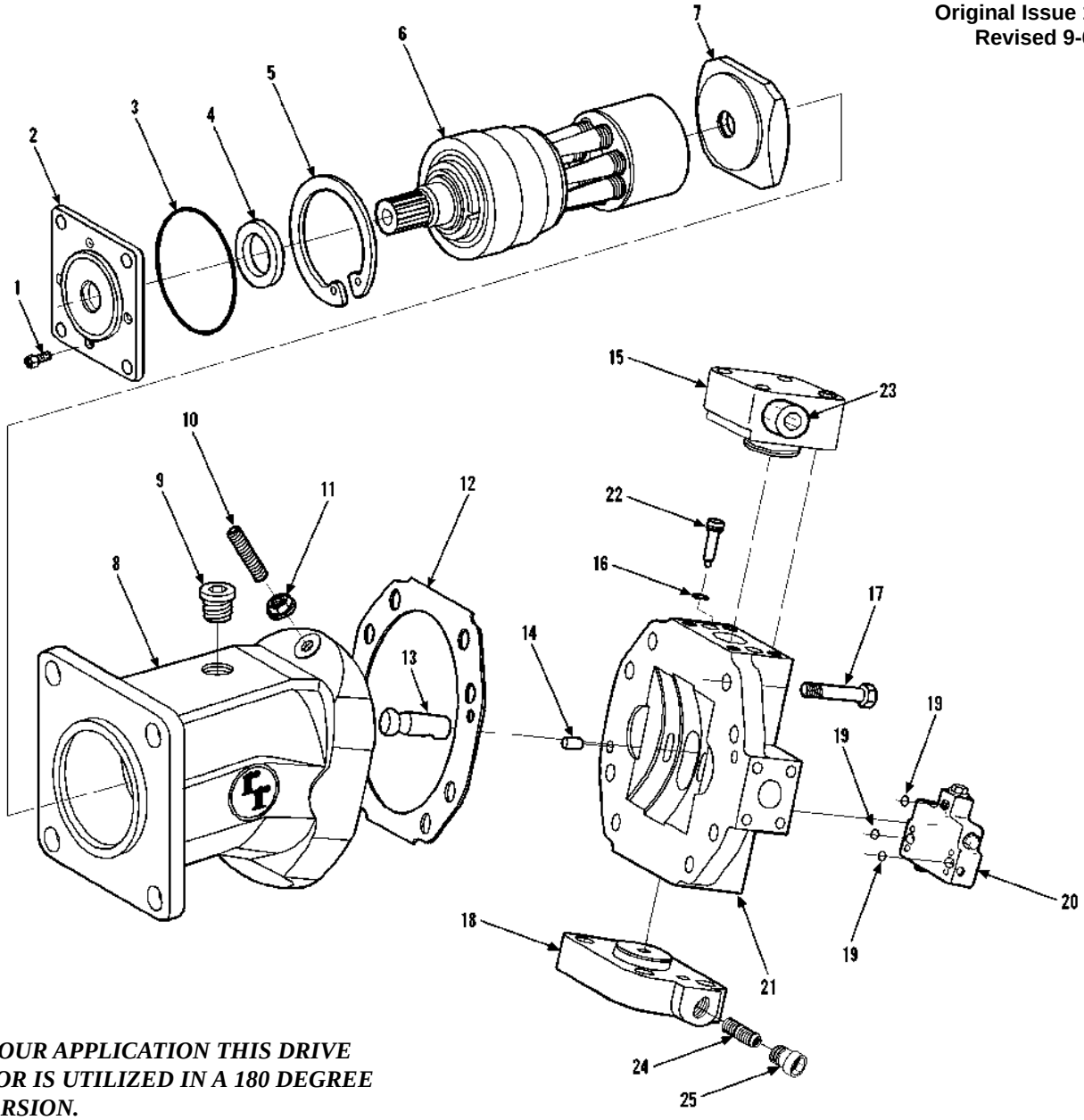

FOR OUR APPLICATION THIS DRIVE MOTOR IS UTILIZED IN A 180 DEGREE INVERSION.

Item	Part No.	Qty.	Description Of Part
	9108-3044	1	FRONT DRIVE MOTOR ASSY (includes all items)
	9114-4152	1	FRONT DRIVE MOTOR SEAL KIT
1		4	CAPSCREW, M8X16
2	9108-4314	1	FRONT COVER
3		1	O-RING (included in seal kit)
4		1	SHAFT SEAL (included in seal kit)
5		1	SNAP RING
6	9114-4150	1	ROTARY GROUP (includes item 5)
7	9108-4315	1	CONTROL LENS
8	9114-4149	1	HOUSING
9		1	PLUG
10		1	STOP SCREW
11		1	SEAL NUT (included in seal kit)
12		1	GASKET (included in seal kit)
13		1	SWIVEL TRUNNION (included with item 21)
14		1	DOWEL PIN (included with item 21)

Item	Part No.	Qty.	Description Of Part
15	9114-4153	1	DA CONTROL ASSY (includes item 23)
16		3	O-RING (included with item 21)
17		8	CAPSCREW (included with item 21)
18	9114-4157	1	STROKING PISTON COVER (includes item 25)
19		3	O-RING (included in seal kit)
20	9109-4020	1	FLUSHING VALVE
21	9114-4151	1	PORTING BLOCK ASSY (includes items 13, 14, 16 & 17)
22	8392-4135	2	CHECK VALVE KIT
23	9114-4248	2	FITTING
24	8392-4123	1	SHUTTLE ORIFICE KIT
25		1	PLUG (included with item 18)
			NOTE: ONLY ITEMS WITH PART NUMBERS ARE AVAILABLE FOR SERVICE.

** Art & Parts list completely redone.*

HYDRAULIC COMPONENTS
(9116-3044) Front Drive Motor (534C-6)
Starting Serial No. 0388349
Original Issue 5-96

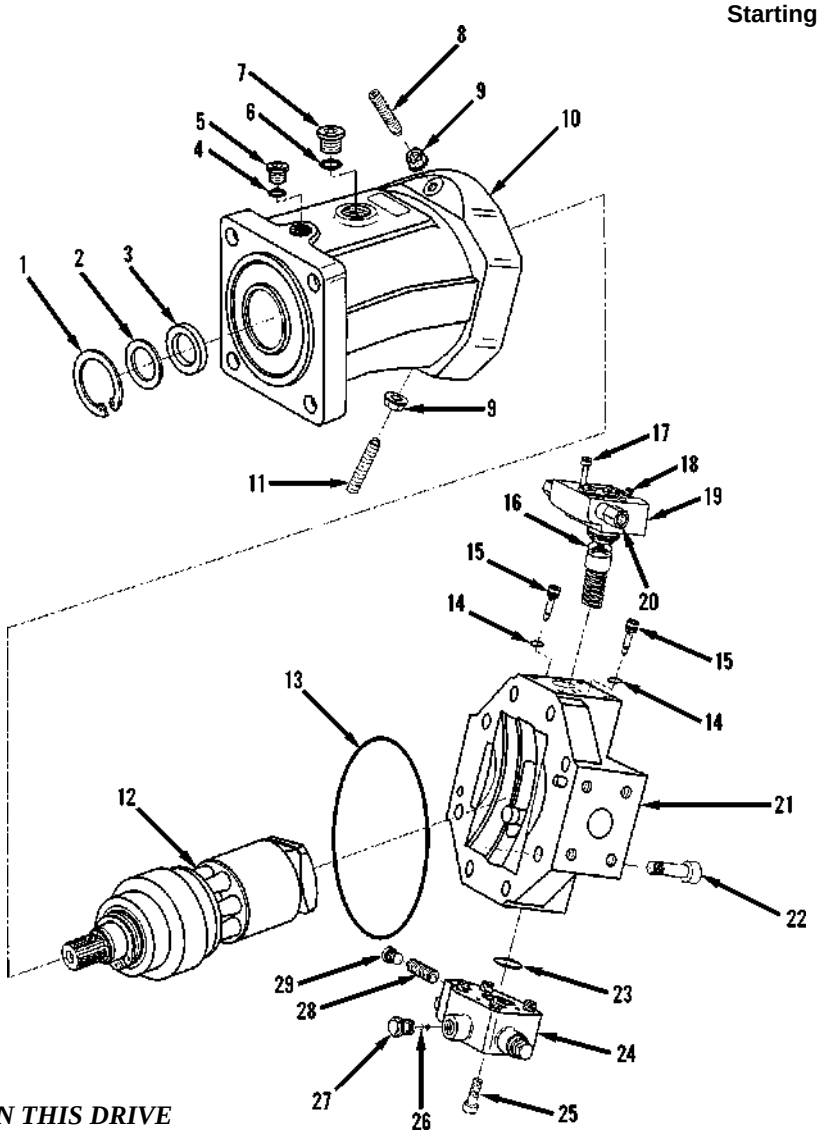

FOR OUR APPLICATION THIS DRIVE MOTOR IS UTILIZED IN A 180 DEGREE INVERSION.

Item	Part No.	Qty.	Description Of Part
	9116-3044	1	FRONT DRIVE MOTOR ASSY (includes all items)
	9109-4025	AR	SEAL KIT (includes items 3,4, 6, 9, 13, 14, 16, 18, 23)
1	9109-4026	1	SNAP RING
2	9109-4027	1	SHIM
3		1	SHAFT SEAL
4		1	O-RING
5	9109-4028	1	PLUG (includes item 5)
6		1	O-RING
7	9109-4029	1	PLUG (includes item 6)
8	8091-4241	1	STOP SCREW, M12X90
9		2	SEAL NUT
10	9109-4030	1	HOUSING
11	9109-4031	1	STOP SCREW, M12X80
12	9109-4032	1	ROTARY GROUP
13		1	O-RING
14		6	O-RING
15	8091-4235	2	CHECK VALVE KIT (includes o-rings)
16		1	O-RING

Item	Part No.	Qty.	Description Of Part
17	8093-4080	4	CAPSCREW
18		1	SEAL NUT
19	9109-4033	1	DA1 CONTROL KIT (includes items 16, 17, 18 & 20)
20	9114-4248	2	FITTING
21	9109-4034	1	REAR COVER ASSY (includes item 22)
22	9109-4035	8	CAPSCREW, M16X45
23		1	O-RING
24	9116-4017	1	FLUSHING VALVE ASSY (includes items 23, 25, 26, 27 & 29)
25	9109-4037	4	CAPSCREW, M8X50
26	9109-4038	1	FLUSHING ORIFICE
27	9109-4039	1	PLUG
28	8392-4123	1	SWIVEL TIME ORIFICE
29	9109-4040	2	PLUG
			NOTE: ONLY ITEMS WITH PART NUMBERS ARE AVAILABLE FOR SERVICE.

HYDRAULIC COMPONENTS
(9108-5051) Manifold Assembly

Starting Serial No. 0188002
Original Issue 1-90
Revised 10-10-95

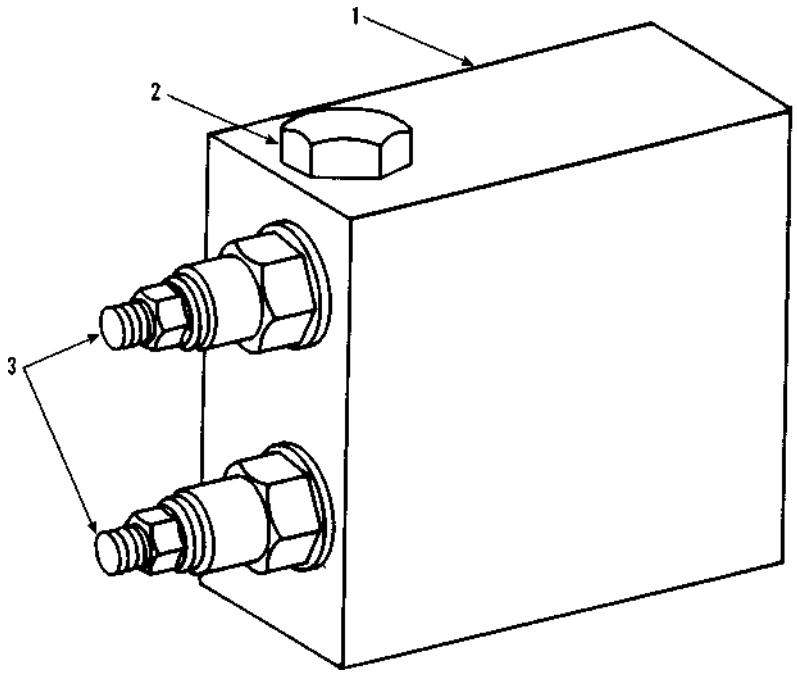

Item	Part No.	Qty.	Description Of Part
	9108-5051	1	MANIFOLD ASSY (includes all items)
1	9108-1491	1	MANIFOLD BLOCK
2	8866-2175	1	HEX HD PLUG (includes o-ring)
	8859-1205	1	0-RING
3	9108-3345	2	RELIEF CARTRIDGE

** Changed upper left to designate model more clearly.*

HYDRAULIC COMPONENTS
(9108-5015) Hydraulic Reservoir & Filter

Starting Serial No. 0188002
Original Issue 1-90
Revised 5-15-00

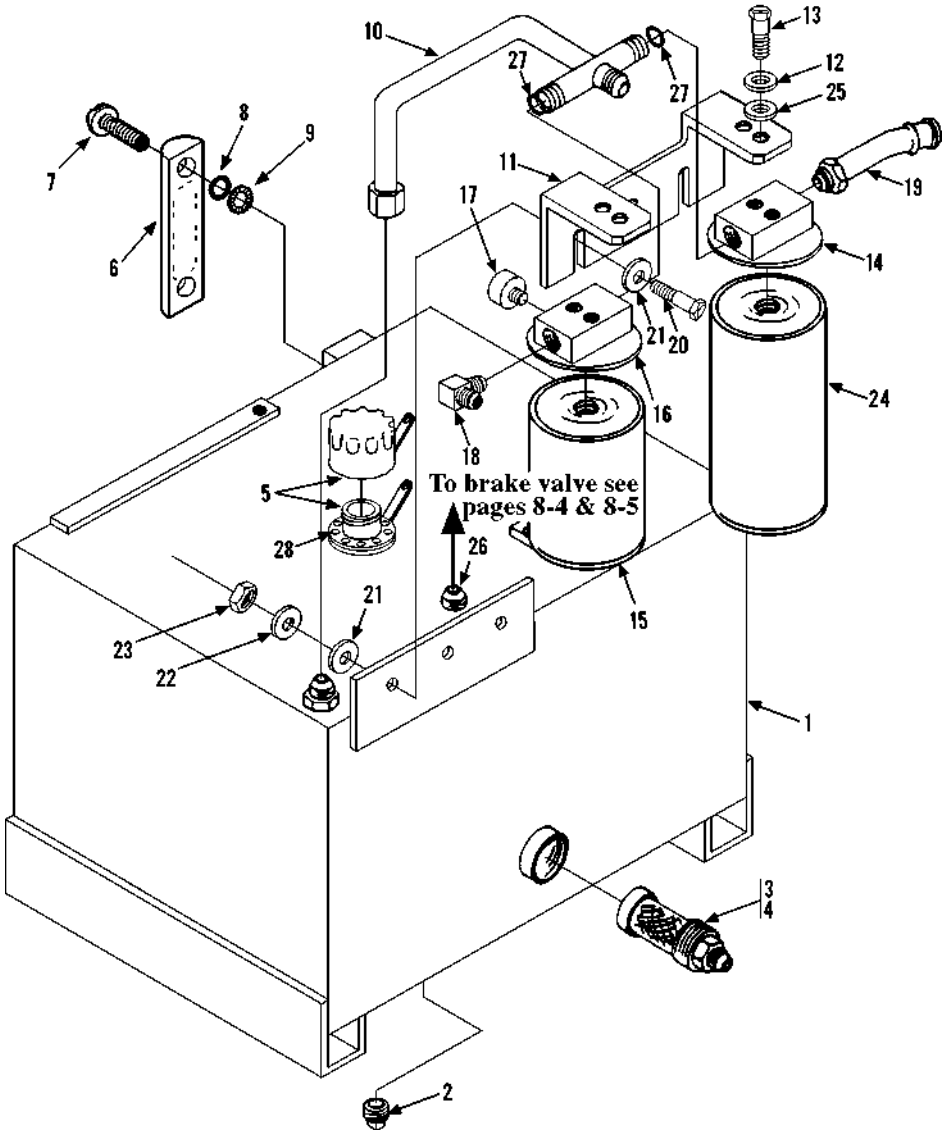

Item	Part No.	Qty.	Description Of Part
	9108-5015	1	HYDRAULIC RESERVOIR ASSY (includes all items)
1	9114-3133	1	HYDRAULIC OIL TANK, (includes item 2)
2		1	PLUG
3	9108-3301	1	TANK FILTER
4	9108-3200	1	STRAIGHT CONNECTOR
5	9108-3069	1	FILLER BREATHER
6	9108-3070	1	FLUID LEVEL GAUGE, (includes items 7,8 & 9)
7		2	ROUND HD SCREW, PORTED
8		2	LOCKWASHER
9		2	O-RING
10	9130-3058	1	RESERVOIR RETURN TUBE
11	9108-1679	1	FILTER SUPPORT
12	8856-1003	4	FLAT WASHER, 1/2
13	8820-1020	4	HEX HD CAPSCREW, 5/16-18X1, GR5
14	9114-3160	1	SUCTION FILTER (includes item 24)
15	9108-4021	1	FILKTER ELEMENT

Item	Part No.	Qty.	Description Of Part
15	9108-4021	1	FILTER ELEMENT
16	9108-3077	1	RETURN FILTER (includes item 15 and item 17)
17	9108-4022	1	COLOR CODED GAUGE
18	9108-3241	1	90 DEGREE CONNECTOR
19	9108-3242	1	45 DEGREE CONNECTOR
20	8820-1036	2	HEX HD CAPSCREW, 3/8-16X1-1/4, GR5
21	8856-1004	4	FLAT WASHER, 3/8
22	8855-1011	2	LOCKWASHER, 3/8
23	8850-1006	2	HEX NUT, 3/8-16
24	9114-3144	1	FILTER ELEMENT
*25	8856-1005	4	WASHER, 1/2"
*26	8866-1010	1	MALE CONNECTOR
*27	8859-1210	2	O-RING
*28	8832-1039	6	SELF TAPPING SCREW # 10-32x1/2
			NOTE: ONLY ITEMS WITH PART NUMBERS ARE AVAILABLE FOR SERVICE.

** Added items 25, 26, 27, & 28; revised illustration.*

HYDRAULIC COMPONENTS
(9108-5015) Hydraulic Reservoir & Filter

Starting Serial No. 0388243
Original Issue 4-97

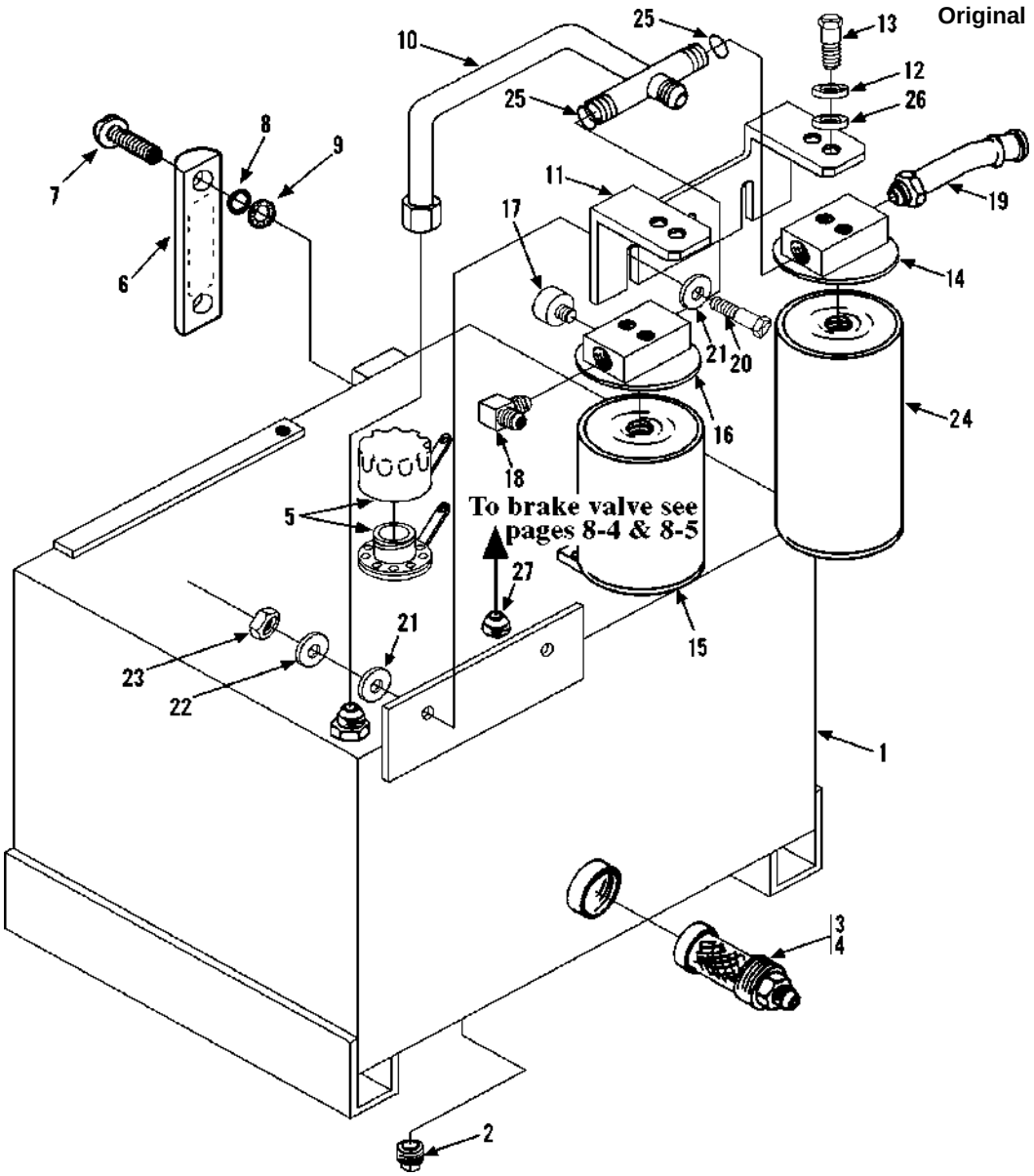

Item	Part No.	Qty.	Description Of Part
	9108-5015	1	HYDRAULIC RESERVOIR ASSY (includes all items)
1	9114-3133	1	HYDRAULIC OIL TANK, (includes item 2)
2		1	PLUG
3	9108-3301	1	TANK FILTER
4	9108-3200	1	STRAIGHT CONNECTOR
5	9108-3069	1	FILLER BREATHER
	8832-1039	6	SELF TAP PAN HD SCREW, #10-32X1/2"
6	9108-3070	1	FLUID LEVEL GAUGE, (includes items 7, 8 & 9)
7		2	ROUND HD SCREW, PORTED
8		2	LOCKWASHER
9		2	O-RING
10	9108-3516	1	RESERVOIR RETURN TUBE
11	9108-1679	1	FILTER SUPPORT
12	8856-1003	4	FLAT WASHER, 5/16
13	8820-1020	4	HEX HD CAPSCREW, 5/16-18X1, GR5
14	9108-3518	1	SUCTION FILTER (includes item 24)

Item	Part No.	Qty.	Description Of Part
15	9108-4021	1	FILTER ELEMENT
16	9108-3517	1	RETURN FILTER (includes items 15 & 17)
17	9108-4022	1	COLOR CODED GAUGE
18	8362-3032	1	90 DEGREE CONNECTOR
19	9108-3519	1	45 DEGREE BEADED INSERT
20	8820-1036	2	HEX HD CAPSCREW, 3/8-16X1-1/4, GR5
21	8856-1004	4	FLAT WASHER, 3/8
22	8855-1011	2	LOCKWASHER, 3/8
23	8850-1006	2	HEX NUT, 3/8-16
24	9114-3144	1	FILTER ELEMENT
25	8859-1210	2	O-RING
26	8856-1005	2	WASHER, 1/2
27	8866-1010	1	MALE CONNECTOR 1/2X3/8 TUBE
			NOTE: ONLY ITEMS WITH PART NUMBERS ARE AVAILABLE FOR SERVICE.

HYDRAULIC COMPONENTS
(9108-3053) Steering Orbitrol

Starting Serial No. 0188002
Original Issue 1-90
Revised 10-10-95

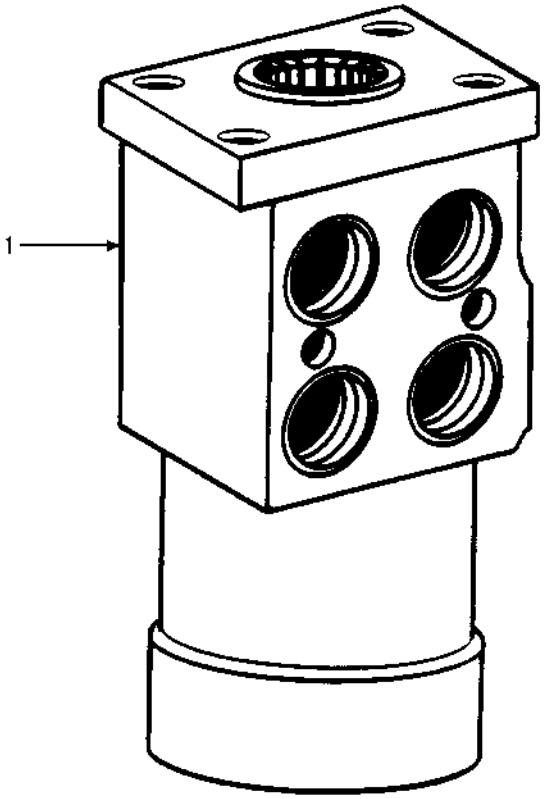

Item	Part No.	Qty.	Description Of Part
	9020-6567	Ref	SEAL KIT
1	9108-3053	Ref	STEERING ORBITROL ASSY

** Changed upper left to designate model more clearly.*

HYDRAULIC COMPONENTS
(9112-3126) Steering Orbitrol
Starting Serial No. 0288032
Original Issue 10-95

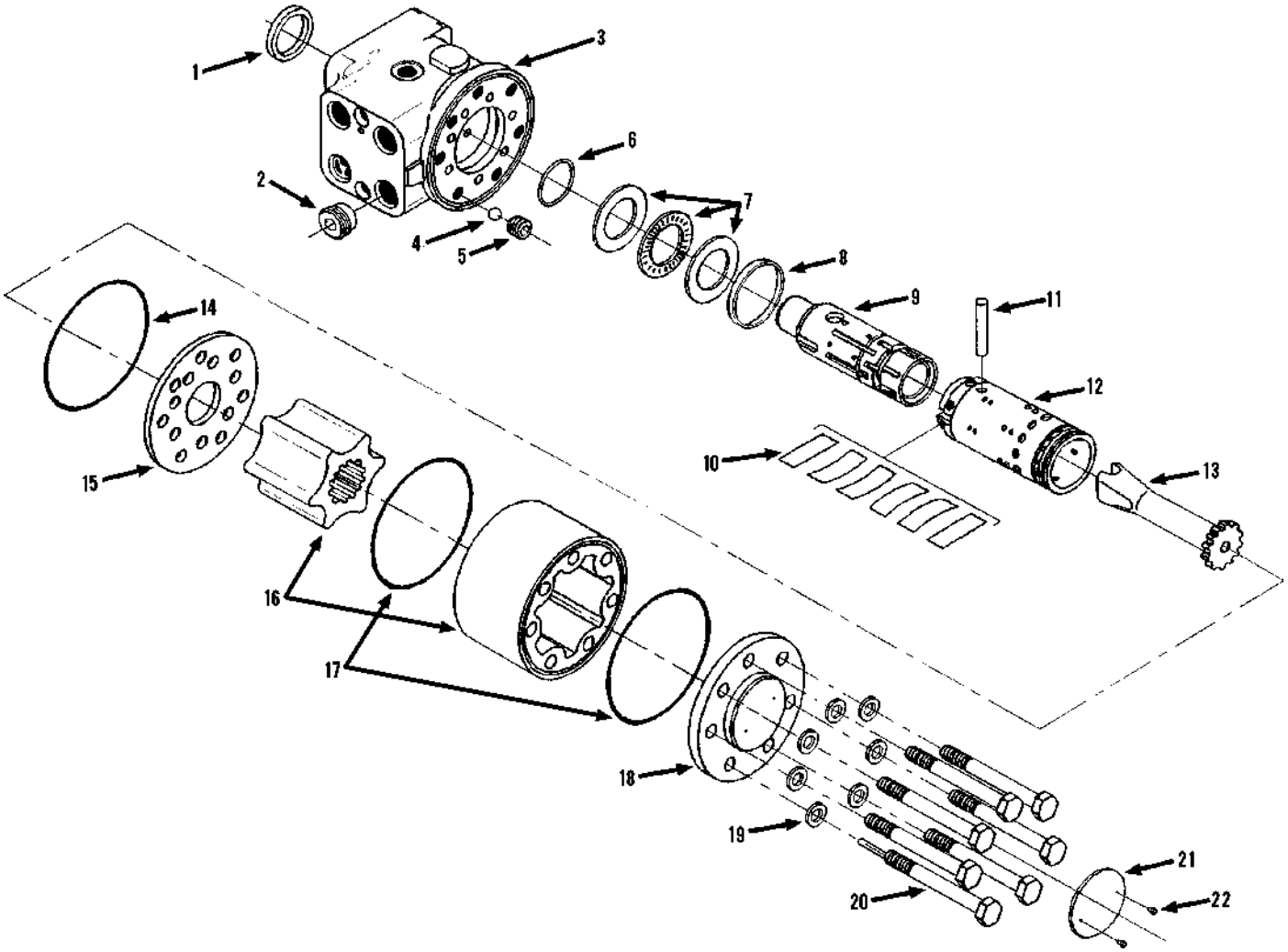

Item	Part No.	Qty.	Description Of Part
	9112-3126	1	STEERING ORBITROL (includes all items)
	9112-4092	1	SEAL KIT (includes items 1, 6, 14, 17 and 19)
1		1	DUST SEAL RING
2	9112-4093	1	CHECK VALVE
3		1	HOUSING (includes items 9 & 12)
4		1	BALL, 8.5mm
5		1	THREAD BUSHING
6		1	O-RING/KIN-RING, O-RING/ROTO GLYD RING
7		1	BEARING ASSY
8		1	RING
9		1	SPOOL
10		1	SPRING SET
11		1	CROSS PIN
12		1	SLEEVE

Item	Part No.	Qty.	Description Of Part
13		1	CARDON SHAFT
14		1	O-RING
15		1	DISTRIBUTOR PLSTE
16		1	GEAR WHEEL SET
17		2	O-RING
18		1	END COVER
19		7	WASHER
20		1	SCREW W/PIN
21		6	SCREW
22		1	NAME PLATE
23		2	DRIVE SCREW
			NOTE: ONLY ITEMS WITH PART NUMBERS ARE AVAILABLE FOR SERVICE.

HYDRAULIC COMPONENTS
(9130-3037) Joystick Assembly

Starting Serial No. 0188166
Original Issue 3-93
Revised 11-03-05

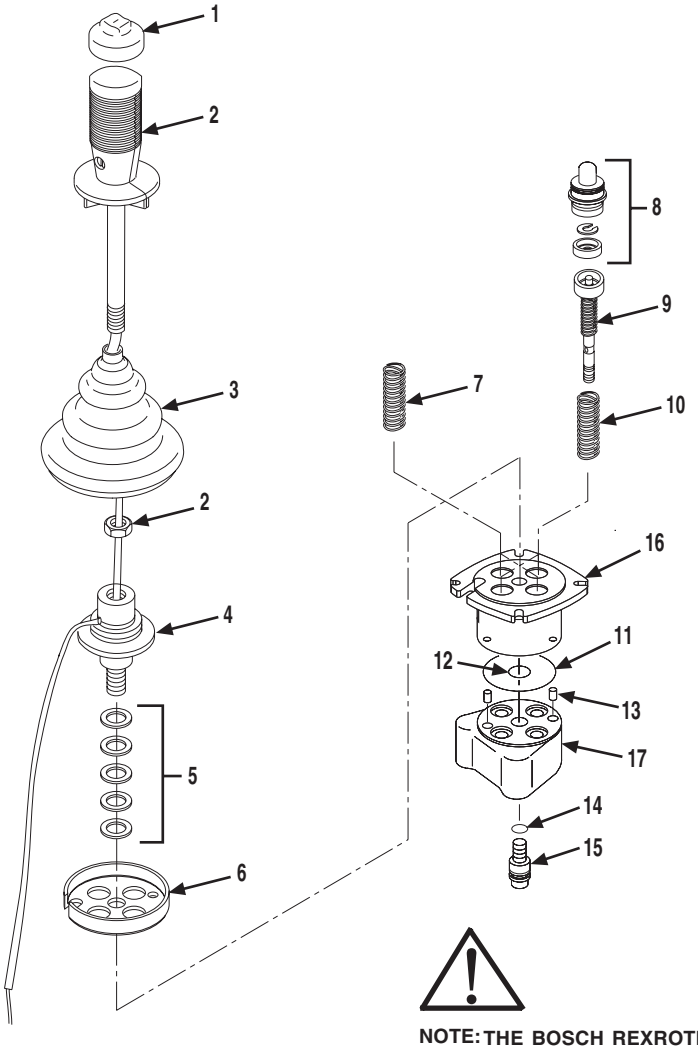

NOTE: THE BOSCH REXROTH CORPORATION JOYSTICK HANDLE SWITCH IS NOT A FIELD SERVICEABLE COMPONENT. ANY ATTEMPT BY NON-FACTORY AUTHORIZED PERSONNEL TO REPAIR OR REPLACE THE SWITCH WILL VOID THE WARRANTY AND CAN RESULT IN A JOYSTICK MALFUNCTION.

Item	Part No.	Qty.	Description Of Part
	9130-3037	1	JOYSTICK ASSY, (includes all items)
	9140-4326	1	SEAL KIT, (includes items 11 thru 15)
1	8093-4658	1	CAP
2	8093-4656	1	HANDLE GRIP KIT
3	8093-4241	1	BOOT
4	8026-4140	1	CARDAN KIT, (includes item 5)
5		AR	SHIM
6	9130-4026	1	RETAINING PLATE
* 7	9150-4029	1	STANDARD SPRING, (pack of two), (ports 2 & 4)
8	8093-4498	4	PLUNGER & GUIDE KIT
9	9140-4327	4	REGULATING KIT
10	9150-4028	1	HEAVY SPRING, (pack of two), (ports 1 & 3)

Item	Part No.	Qty.	Description Of Part
11		1	O-RING
12		1	O-RING
13		2	PIN
14		1	O-RING
15		1	SCREW
16		1	UPPER BODY
17		1	LOWER BODY

NOTE: ONLY ITEMS WITH PART NUMBERS ARE AVAILABLE FOR SERVICE.

** Changed part number on item 7.*

HYDRAULIC COMPONENTS
(9108-3424) Traction Lock Valve (534C-6)

Starting Serial No. 0188251
Original Issue 2-94
Revised 10-10-95

NOTE: STARTING SERIAL NUMBER 0288251 IS INCORRECT. DISCARD PAGE 10-25 WITH S/N 0288251 AND REPLACE IT WITH PAGE 10-25, STARTING S/N 0188251.

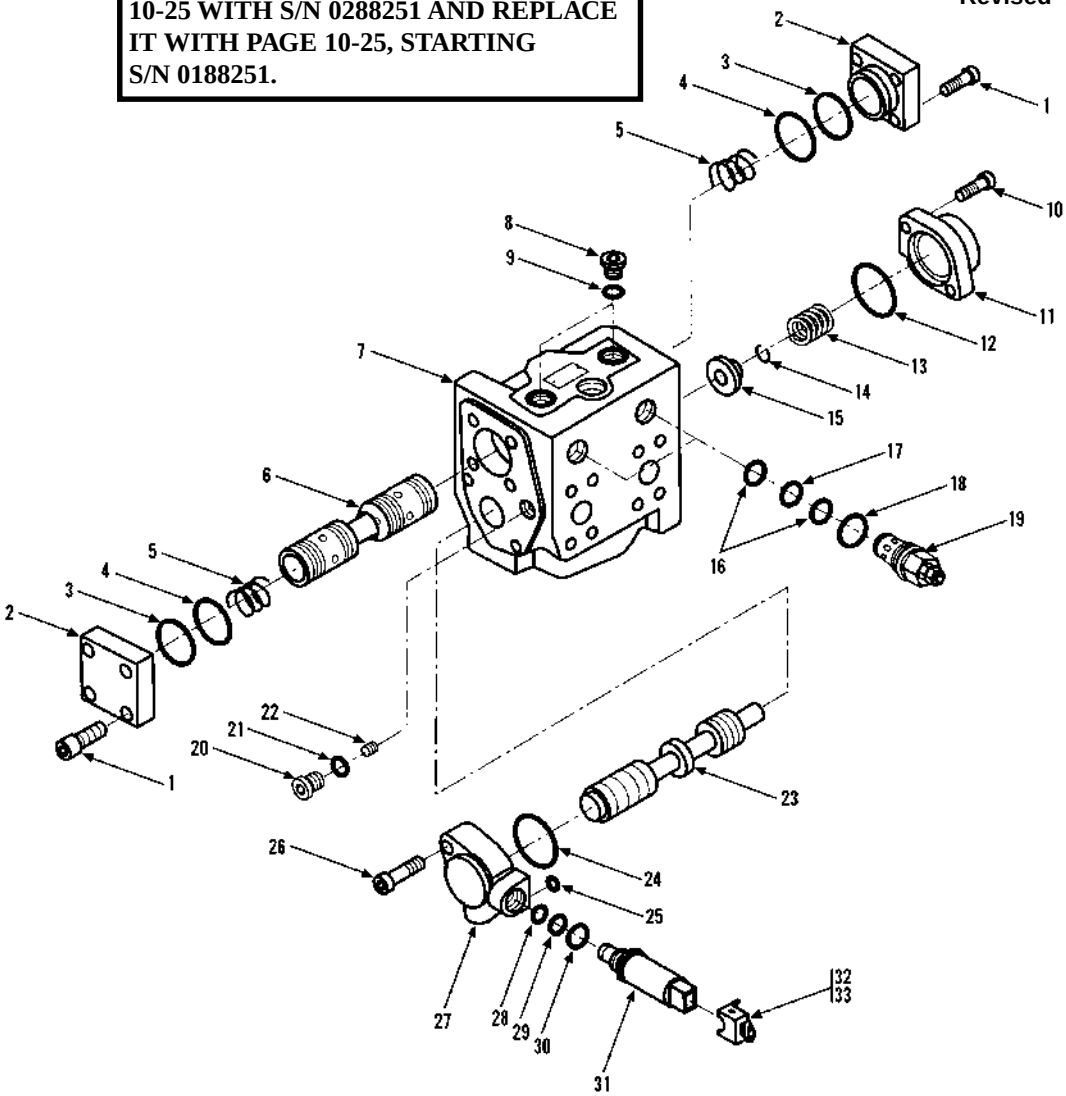

Item	Part No.	Qty.	Description Of Part
	9108-3424	1	TRACTION LOCK VALVE (includes all items)
	9108-4284	Ref	SEAL KIT (includes items 3, 4, 9, 12, 16, 17, 18, 21, 24, 25, 28, 29 & 30)
1	9108-4285	8	HEX HD CAPSCREW, M10X30
2	9108-4286	2	COVER
3	9108-4287	2	BACK-UP RING
4	9108-4288	2	O-RING
5	9108-4289	2	SPRING
6		1	SPOOL (not sold separately, order P/N 9108-3424)
7		1	HOUSING (not sold separately, order P/N 9108-3424)
8	9108-4290	2	PLUG (includes item 9)
9		2	O-RING
10	9108-4291	2	HEX HD CAPSCREW, M6X16
11	9108-4292	1	COVER
12	9108-4293	1	O-RING
13	9108-4294	1	SPRING
14	9108-4295	1	RETAINING RING
15	9108-4296	1	SPRING RETAINER
16		4	BACK-UP RING
17		2	O-RING

Item	Part No.	Qty.	Description Of Part
18		2	O-RING
19	9108-4297	2	RELIEF VALVE CARTRIDGE (includes items, 16, 17 & 18)
20	9108-4298	2	PLUG (includes item 21)
21		1	O-RING
22	9108-4299	1	ORIFICE
23		1	SPOOL (not sold separately, order P/N 9108-3424)
24	9108-4300	1	O-RING
25	9108-4303	1	O-RING
26	8093-4205	2	HEX HD CAPSCREW, M6X30
27	9108-4301	1	COVER
28		1	O-RING
29		1	O-RING
30		1	O-RING
31	9108-4302	1	SOLENOID VALVE (includes items 28, 29 & 30)
32	9108-3441	1	CONNECTOR
33	9108-3442	2	TERMINAL
			NOTE: ONLY ITEMS WITH PART NUMBERS ARE AVAILABLE FOR SERVICE.

* *Changed upper left to designate model more clearly. Starting serial number incorrect.*

HYDRAULIC COMPONENTS
(9108-3459) Traction Lock Valve (534C-6)

Starting Serial No. 0288568
Original Issue 6-95
Revised 10-10-95

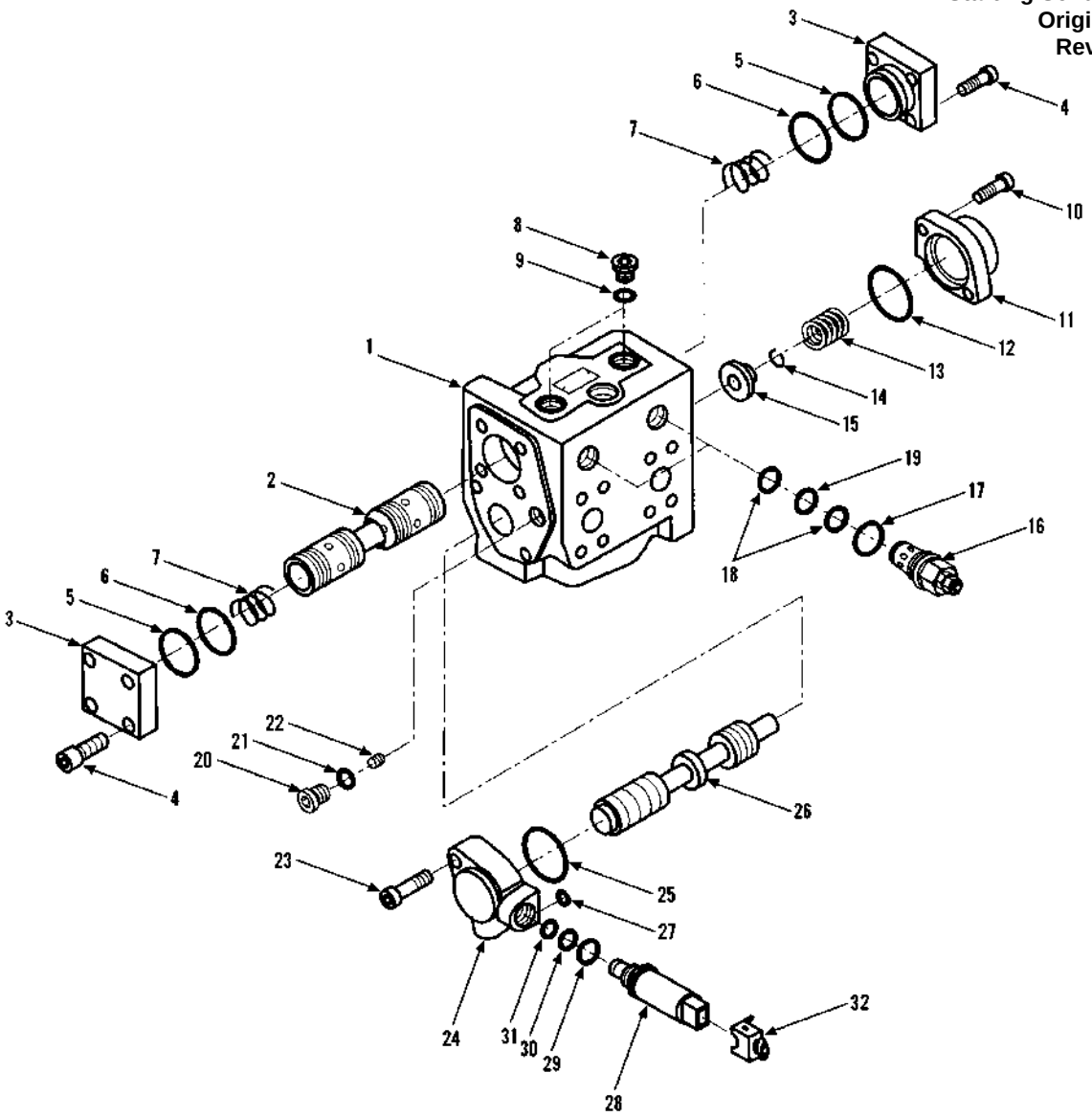

Item	Part No.	Qty.	Description Of Part
	9108-3459	1	TRACTION LOCK VALVE (includes all items)
	9108-4284	Ref	SEAL KIT (includes items 5, 6, 9, 12, 17, 18, 19, 21, 25, 27, 29, 30 & 31)
1		1	VALVE BODY (not sold separately, order P/N 9108-3459)
2		1	SPOOL (not sold separately, order P/N 9108-3459)
3	9108-4286	2	COVER
4	9108-4285	8	HEX HD CAPSCREW, M10X30
5	9108-4287	2	BACK-UP RING
6	9108-4288	2	O-RING
7	9108-4289	2	SPRING
8	9108-4290	2	PLUG (includes item 9)
9	9114-4009	2	O-RING
10	9108-4291	2	HEX HD CAPSCREW, M6X16
11	9108-4292	1	COVER
12	9108-4293	1	O-RING
13	9108-4294	1	SPRING
14	9108-4295	1	RETAINING RING
15	9108-4296	1	SPRING RETAINER

Item	Part No.	Qty.	Description Of Part
16	9108-4297	2	RELIEF VALVE CARTRIDGE (set at 5800 PSI) (includes items 17, 18 & 19)
17	8381-4056	2	O-RING
18	9114-4010	4	BACK-UP RING
19	8381-4054	2	O-RING
20	9108-4298	1	PLUG (includes item 21)
21	9114-4011	1	O-RING
22	9108-4299	1	ORIFICE
23	8093-4205	2	HEX HD CAPSCREW, M6X30
24	9108-4301	1	COVER
25	9108-4300	1	O-RING
26		1	SPOOL (not sold separately, order P/N 9108-3459)
27	9108-4303	1	O-RING
28	9108-4302	1	SOLENOID VALVE (include items 29, 30 & 31)
29	9114-4012	1	O-RING
30	9114-4013	1	O-RING
31	9114-4014	1	O-RING
32	9114-4015	1	CONNECTOR

** Changed upper left to designate model more clearly.*

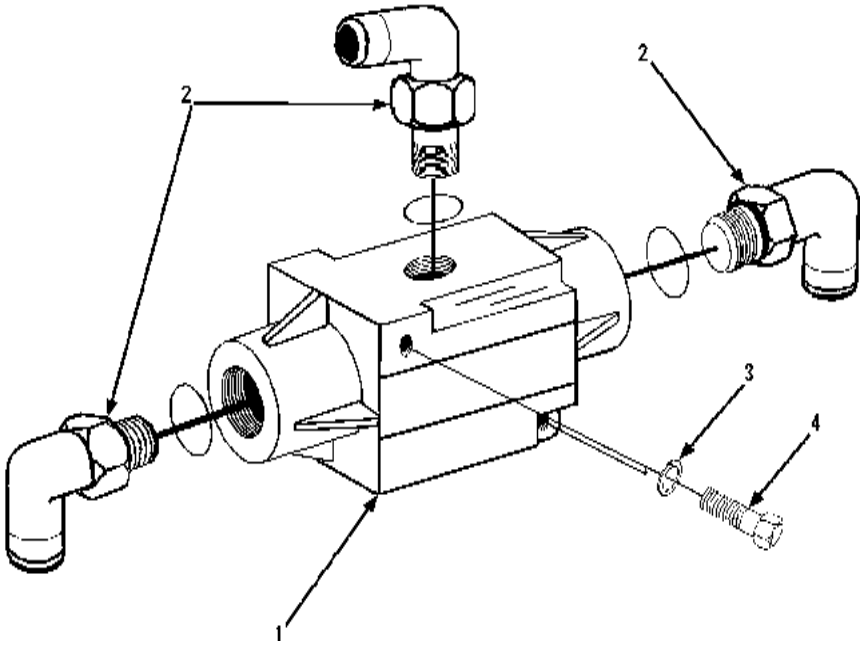

Item	Part No.	Qty.	Description Of Part
	9132-5012	1	THERMAL BYPASS VALVE ASSY (includes all items except 3 & 4)
1	9114-3338	1	BYPASS VALVE
	8097-4021	1	ELEMENT KIT
2	8866-2069	3	ELBOW, 90 DEGREES (includes o-ring)
	8859-1209	3	O-RING
3	8855-1011	2	LOCKWASHER
4	8820-1043	2	HEX HD CAPSCREW, 3/8-16X3, GR5

ELECTRICAL
Engine Wiring (532C-6)
Starting Serial No. 0188002
Original Issue 1-90
Revised 11-20-95

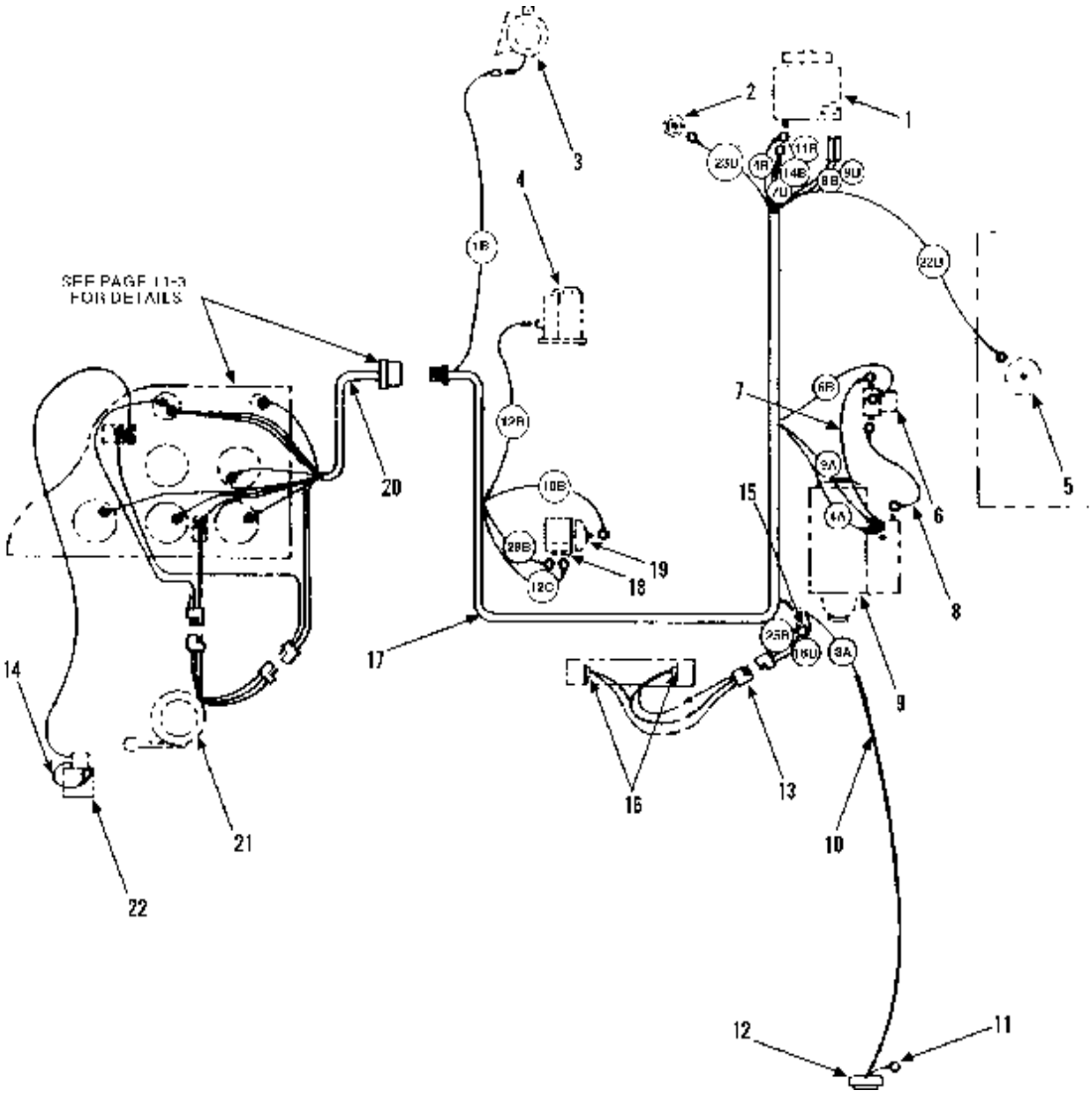

Item	Part No.	Qty.	Description Of Part
1	9108-4002	Ref	ALTERNATOR
2	9020-6124	Ref	WATER TEMP. SENDER
3	2492-1393	Ref	HORN
4		Ref	FUEL SHUT-OFF VALVE, (included w/engine)
5	9040-0654	Ref	FUEL LEVEL SENDER
6	9040-2427	Ref	STARTER SOLENOID RELAY
7	9108-1462	1	JUMPER WIRE
8	9020-5205	1	JUMPER WIRE
9	9108-4003	Ref	STARTER
10	8203-3996	57"	WIRE LOOM
11		Ref	TRAVEL ALARM GROUND WIRE, (included w/travel alarm)
12	9123-3012	Ref	TRAVEL ALARM
13	9108-3406	1	PUMP HARNESS

Item	Part No.	Qty.	Description Of Part
14	9020-7719	1	JUMPER WIRE
15		Ref	FWD/REV. SWITCH GROUND
16		Ref	PLUG-IN CONNECTORS
17	9108-3048	1	ENGINE WIRING HARNESS, (includes item 15)
18	2474-1047	Ref	PRESSURE SWITCH
19	9103-3246	Ref	OIL PRESSURE SENDER
* 20	9108-3110	1	DASH WIRING HARNESS
21	9108-5025	Ref	FWD/REV. SWITCH
22	9020-6739	2	SOLENOID VALVE
			NOTE: ONLY ITEMS WITH PART NUMBER ARE AVAILABLE FOR SERVICE.

** Changed part number on item 20.*

ELECTRICAL
(9114-3192) Engine Wiring
Starting Serial No. 0288777
Original Issue 10-95

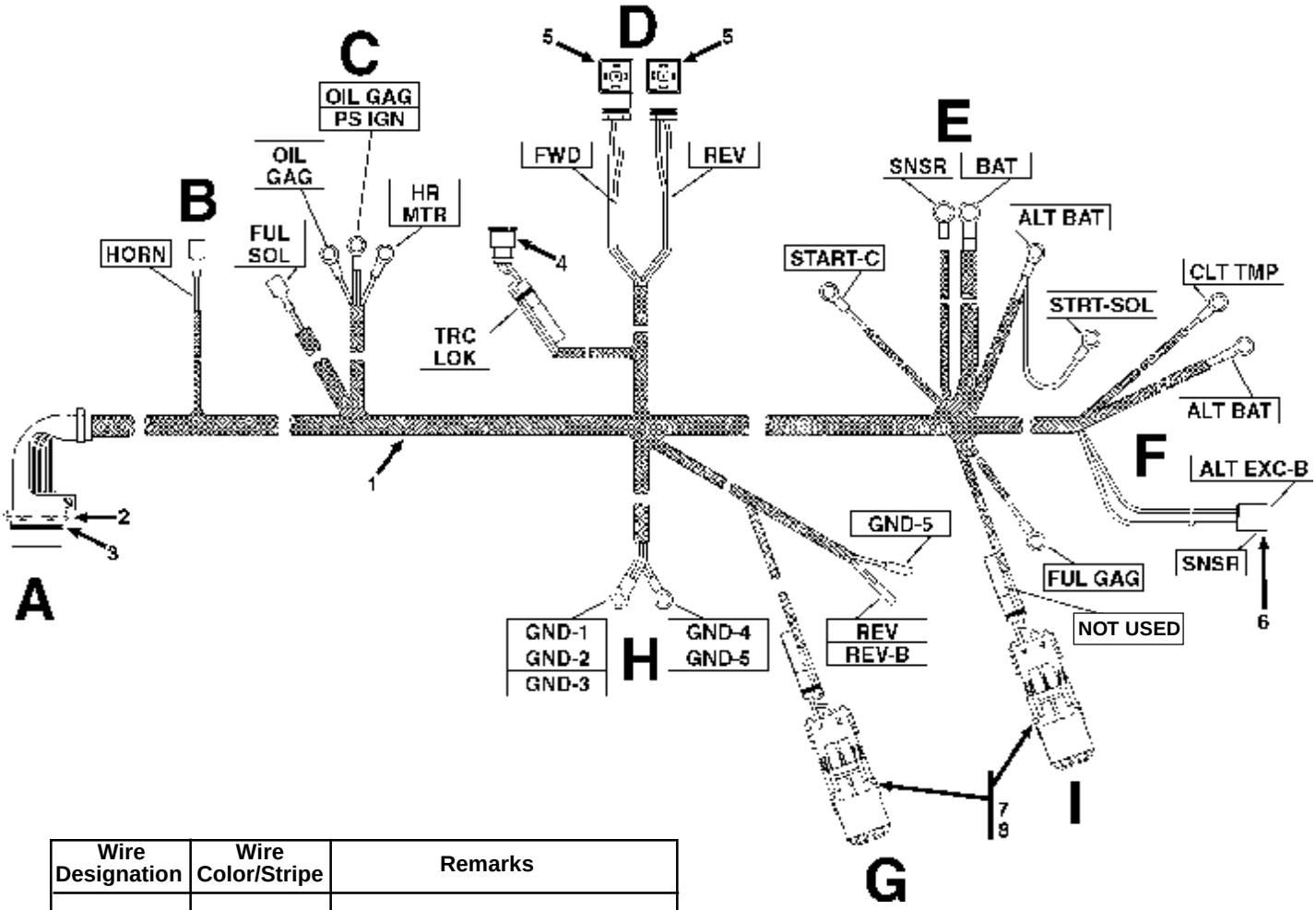

Wire Designation	Wire Color/Stripe	Remarks
BAT	RED	ALT.(BAT.) TO IGN. SW. (BAT.)
HR MTR	BLU/RED	OIL PRESS. SW. TO HR. METER
HORN	VIOLET/YELO	HORN
FUL GAG	BLU/BLK	FUEL GAUGE
START-C	VIOLET/BRN	STARTER RELAY
ALT EXC-B	VIOLET/RED	ALTERNATOR EXCITER (ALT. PLUG)
PS IGN	ORNG/YELO	OIL PRESS. SW.
OIL GAG	BLU/BRN	OIL PRESS. GAUGE
CLT TMP	BLU/VIOLET	WATER TEMP. GAUGE
REV	BRN/YELO	FWD/REV VALVE
FWD	BRN/WHITE	FWD/REV VALVE
4x4	BRN	4x4 VALVE
TRC LOK	BRN/GREY	TRACTION LOCK VALVE
FUL SOL	VIOLET	FUEL SOLENOID
REV-B	BLU	BACKUP ALARM
SNSR	RED/BLK	SNSR (ALT. PLUG)
ALT BAT	RED/WHITE	ALTRNTR TO STARTER BAT. POST
GND-1	BLK	FWD/REV VALVE TO GROUND
GND-2	BLK	FWD/REV VALVE TO GROUND
GND-3	BLK	4x4 VALVE TO GROUND
GND-4	BLK	TRACTION LOCK VLV TO GROUND
GND-5	BLK	BACKUP ALARM TO GROUND
STRT-SOL	RED/VIOLET	ALT BAT TO STARTER SOLENOID

Item	Part No.	Qty.	Description Of Part
1	9114-3192	1	ENGINE WIRING HARNESS (includes all items)
2	8348-1286	1	PANEL NUT
3	8348-1285	1	LOCKWASHER
4	9108-3440	1	ELECTRICAL CONNECTOR
5	9108-4038	2	RECEPTACLE
6	8368-3254	1	3 CONTACT PLUG (includes pins)
	9002-6803	3	PIN
7	8096-3057	2	TOWER
8	8096-3058	2	SHROUD
			NOTE: ONLY ITEMS WITH PART NUMBERS ARE AVAILABLE FOR SERVICE.

ELECTRICAL
Engine Wiring (534C-6)
Starting Serial No. 0188002
Original Issue 1-90
Revised 11-20-95

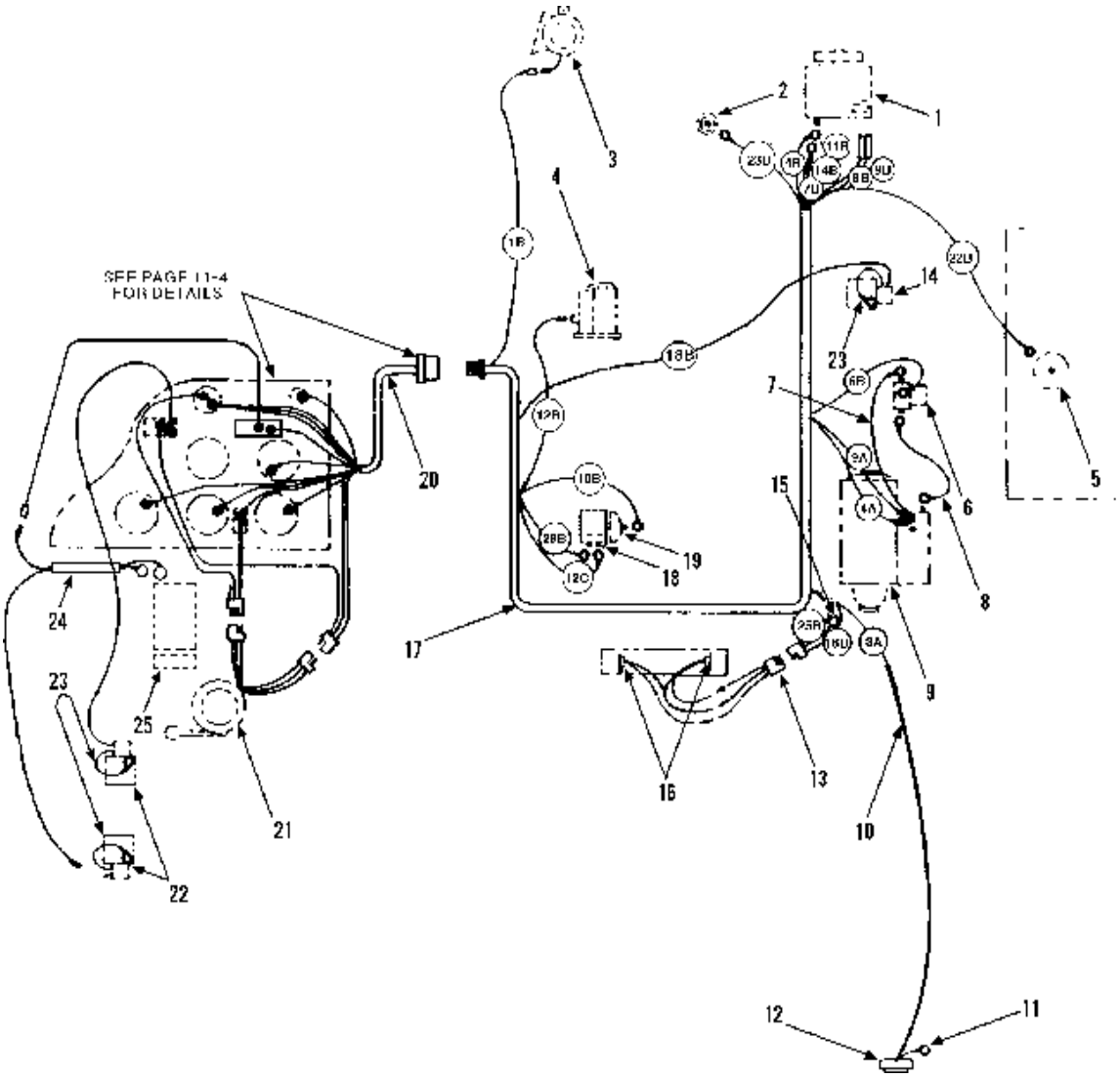

Item	Part No.	Qty.	Description Of Part
1	9108-4002	Ref	ALTERNATOR
2	9020-6124	Ref	WATER TEMP. SENDER
3	2492-1393	Ref	HORN
4		Ref	FUEL SHUT-OFF VALVE, (included w/engine)
5	9040-0654	Ref	FUEL LEVEL SENDER
6	9040-2427	Ref	STARTER SOLENOID RELAY
7	9108-1462	1	JUMPER WIRE
8	9020-5205	1	JUMPER WIRE
9	9108-4003	Ref	STARTER
10	8203-3996	57"	WIRE LOOM
11		Ref	TRAVEL ALARM GROUND WIRE, (included w/travel alarm)
12	9123-3012	Ref	TRAVEL ALARM
13	9108-3406	1	PUMP HARNESS
14	9020-6739	1	2WD/4WD VALVE

Item	Part No.	Qty.	Description Of Part
15		Ref	FWD/REV. SWITCH GROUND
16		Ref	PLUG-IN CONNECTORS
17	9108-3048	1	ENGINE WIRING HARNESS, (includes item 15)
18	2474-1047	Ref	PRESSURE SWITCH
19	9103-3246	Ref	OIL PRESSURE SENDER
* 20	9108-3110	1	DASH WIRING HARNESS
21	9108-5025	Ref	FWD/REV. SWITCH
22	9020-6739	2	VALVE
23	9020-7719	3	JUMPER WIRE
24	9108-5045	1	SWITCH CABLE
25	9108-3311	1	FOOT SWITCH
			NOTE: ONLY ITEMS WITH PART NUMBER ARE AVAILABLE FOR SERVICE.

** Changed part number on item 20.*

ELECTRICAL
(9114-3192) Engine Wiring
Starting Serial No. 0288777
Original Issue 10-95

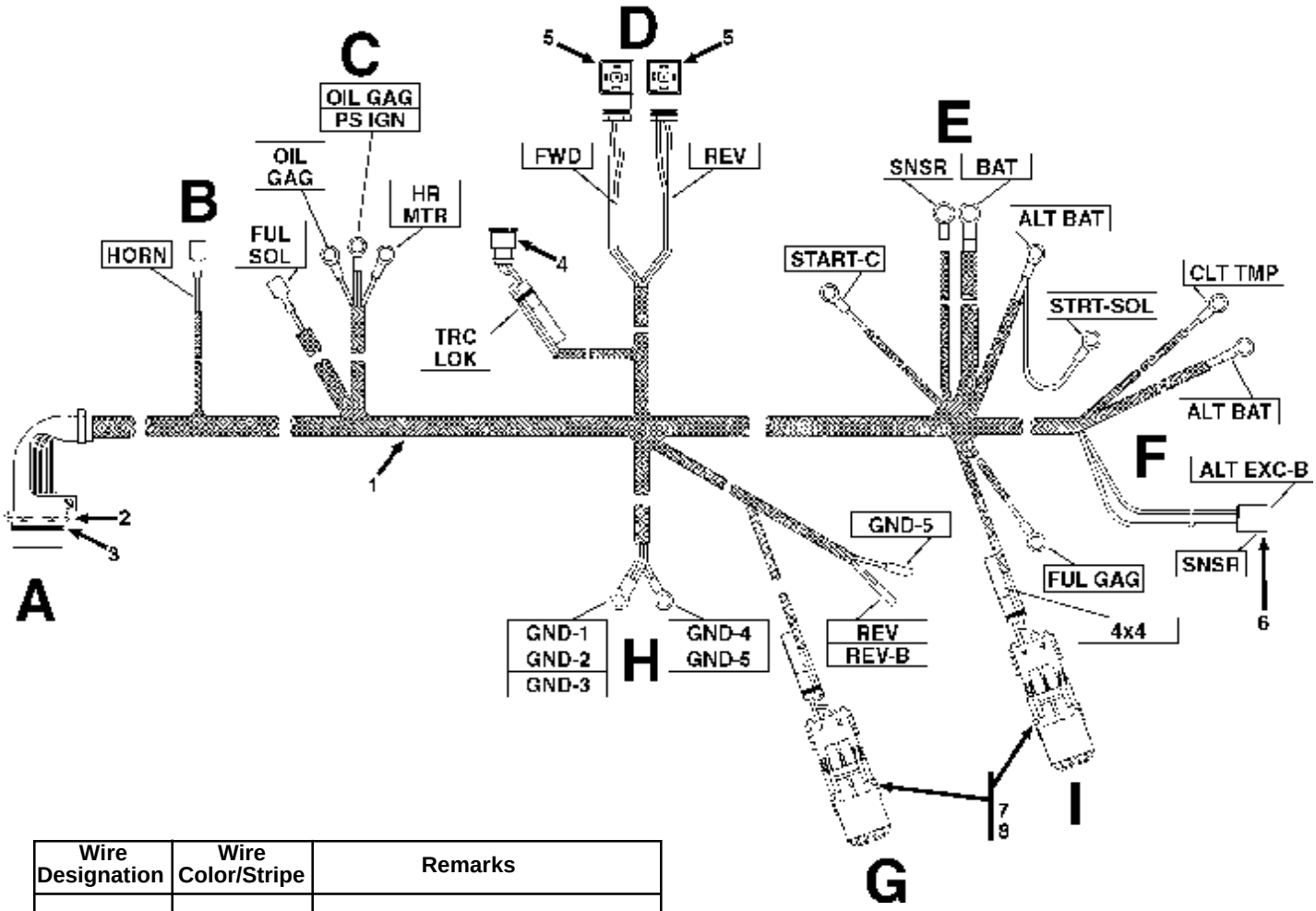

Wire Designation	Wire Color/Stripe	Remarks
BAT	RED	ALT.(BAT.) TO IGN. SW. (BAT.)
HR MTR	BLU/RED	OIL PRESS. SW. TO HR. METER
HORN	VIOLET/YELO	HORN
FUL GAG	BLU/BLK	FUEL GAUGE
START-C	VIOLET/BRN	STARTER RELAY
ALT EXC-B	VIOLET/RED	ALTERNATOR EXCITER (ALT. PLUG)
PS IGN	ORNG/YELO	OIL PRESS. SW.
OIL GAG	BLU/BRN	OIL PRESS. GAUGE
CLT TMP	BLU/VIOLET	WATER TEMP. GAUGE
REV	BRN/YELO	FWD/REV VALVE
FWD	BRN/WHITE	FWD/REV VALVE
4x4	BRN	4x4 VALVE
TRC LOK	BRN/GREY	TRACTION LOCK VALVE
FUL SOL	VIOLET	FUEL SOLENOID
REV-B	BLU	BACKUP ALARM
SNSR	RED/BLK	SNSR (ALT. PLUG)
ALT BAT	RED/WHITE	ALTRNTR TO STARTER BAT. POST
GND-1	BLK	FWD/REV VALVE TO GROUND
GND-2	BLK	FWD/REV VALVE TO GROUND
GND-3	BLK	4x4 VALVE TO GROUND
GND-4	BLK	TRACTION LOCK VLV TO GROUND
GND-5	BLK	BACKUP ALARM TO GROUND
STRT-SOL	RED/VIOLET	ALT BAT TO STARTER SOLENOID

Item	Part No.	Qty.	Description Of Part
1	9114-3192	1	ENGINE WIRING HARNESS (includes all items)
2	8348-1286	1	PANEL NUT
3	8348-1285	1	LOCKWASHER
4	9108-3440	1	ELECTRICAL CONNECTOR
5	9108-4038	2	RECEPTACLE
6	8368-3254	1	3 CONTACT PLUG (includes pins)
	9002-6803	3	PIN
7	8096-3057	2	TOWER
8	8096-3058	2	SHROUD
			NOTE: ONLY ITEMS WITH PART NUMBERS ARE AVAILABLE FOR SERVICE.

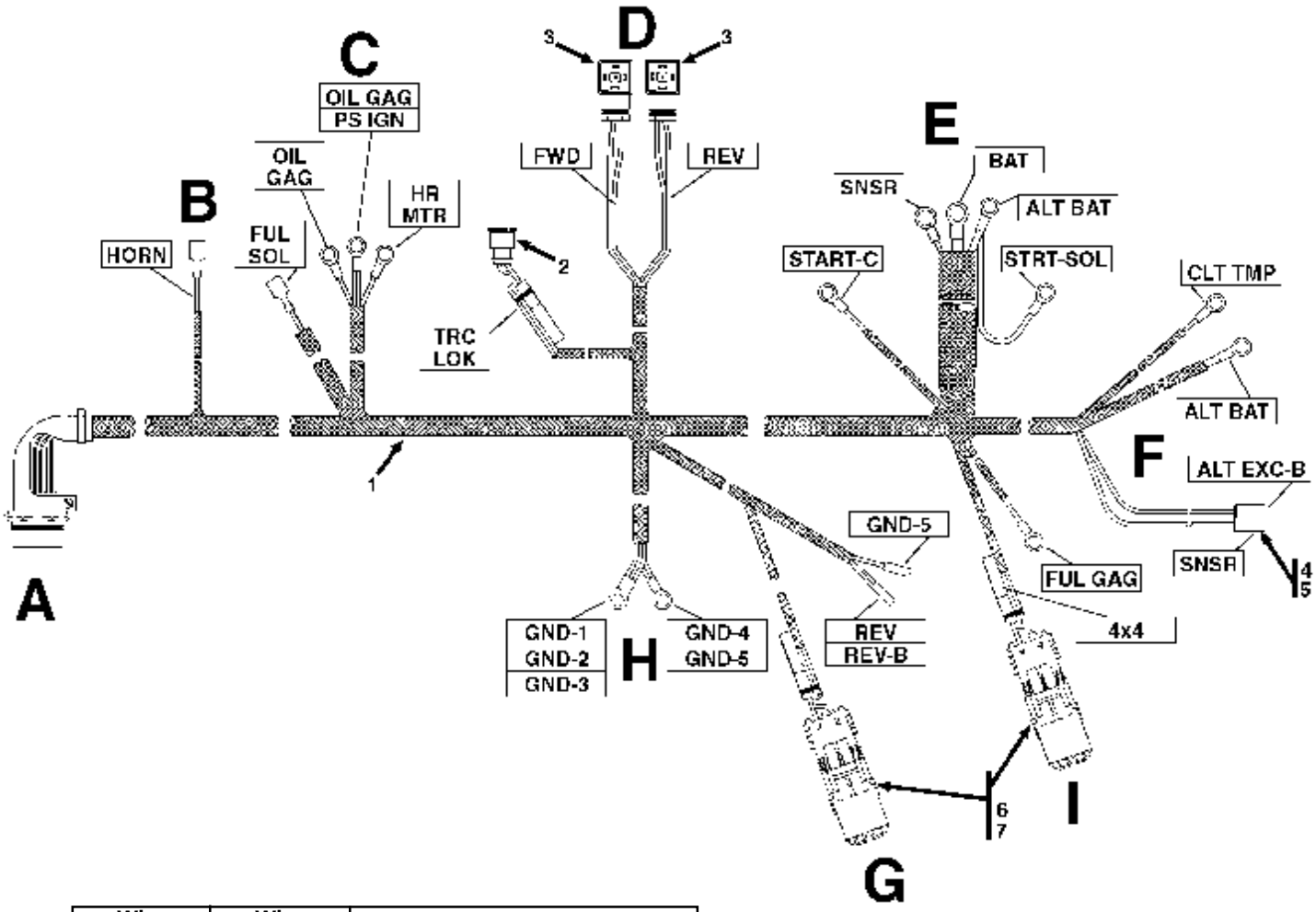

Wire Designation	Wire Color/Stripe	Remarks
BAT	RED	ALT.(BAT.) TO IGN. SW. (BAT.)
HR MTR	BLU/RED	OIL PRESS. SW. TO HR. METER
HORN	VIOLET/YELO	HORN
FUL GAG	BLU/BLK	FUEL GAUGE
START-C	VIOLET/BRN	STARTER RELAY
ALT EXC-B	VIOLET/RED	ALTERNATOR EXCITER (ALT. PLUG)
PS IGN	ORNG/YELO	OIL PRESS. SW.
OIL GAG	BLU/BRN	OIL PRESS. GAUGE
CLT TMP	BLU/VIOLET	WATER TEMP. GAUGE
REV	BRN/YELO	FWD/REV VALVE
FWD	BRN/WHITE	FWD/REV VALVE
4x4	BRN	4x4 VALVE
TRC LOK	BRN/GREY	TRACTION LOCK VALVE
FUL SOL	VIOLET	FUEL SOLENOID
REV-B	BLU	BACKUP ALARM
SNSR	RED/BLK	SNSR (ALT. PLUG)
ALT BAT	RED/WHITE	ALTRNTR TO STARTER BAT. POST
GND-1	BLK	FWD/REV VALVE TO GROUND
GND-2	BLK	FWD/REV VALVE TO GROUND
GND-3	BLK	4x4 VALVE TO GROUND
GND-4	BLK	TRACTION LOCK VLV TO GROUND
GND-5	BLK	BACKUP ALARM TO GROUND
STRT-SOL	RED/VIOLET	ALT BAT TO STARTER SOLENOID

Item	Part No.	Qty.	Description Of Part
1	9112-3166	1	ENGINE WIRING HARNESS (includes all items)
2	9108-3440	1	ELECTRICAL CONNECTOR
3	9108-4038	2	RECEPTACLE
4	8368-3254	1	3 CONTACT PLUG (includes item 5)
5	9002-6803	3	PIN
6	8096-3057	2	TOWER
7	8096-3058	2	SHROUD
			NOTE: ONLY ITEMS WITH PART NUMBERS ARE AVAILABLE FOR SERVICE.

ELECTRICAL
(9108-5035) Gauge Panel Assy (532C-6)

Starting Serial No. 0188002
Original Issue 1-90
Revised 6-27-07

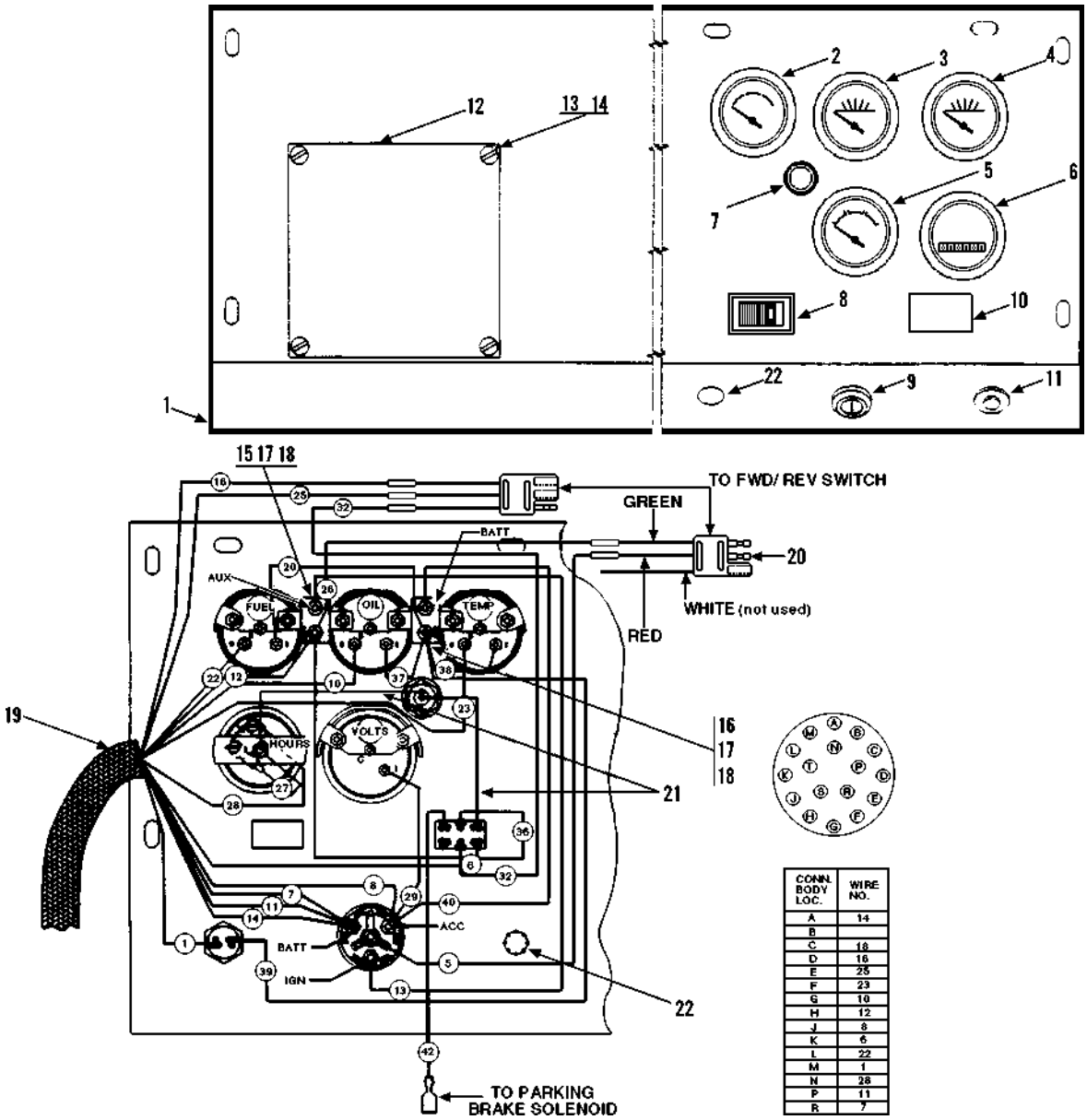

CONN. BODY LOC.	WIRE NO.
A	14
B	
C	18
D	16
E	25
F	23
G	10
H	12
J	8
K	6
L	22
M	1
N	28
P	11
R	7

Item	Part No.	Qty.	Description Of Part
	9108-5035	1	GAUGE PANEL ASSY (includes all items)
1	9108-1371	1	DASH PANEL
2	9020-5687	1	WATER TEMP. GAUGE
3	9103-3247	1	OIL PRESSURE GAUGE
4	9020-5686	1	FUEL GAUGE
5	7738-3709	1	VOLTMETER
6	9020-5688	1	HOURMETER
7	9103-3084	1	BRAKE WARNING LIGHT
8	9108-3259	1	ROCKER SWITCH
9	9103-3317	1	IGNITION START SWITCH
*	7738-4578	1	KEY
10	7716-3144	1	BLANK PLUG

Item	Part No.	Qty.	Description Of Part
11	9020-0434	1	BUTTON SWITCH
12	9108-1480	1	COVER PLATE
13	8830-1141	4	ROUND HD MACHINE SCREW, 5/16-18X3/4
14	8855-1010	4	LOCKWASHER, 5/16
15	9108-3260	1	15A CIRCUIT BREAKER
16	9103-3111	1	10A CIRCUIT BREAKER
17	8855-4917	4	LOCKWASHER, #10
18	8850-1613	4	HEX NUT, #10-32
19	9108-3110	1	DASH WIRING HARNESS
20	8348-3114	1	3-WAY CONNECTOR
21	8698-3188	16	EYELET #10
22	9108-3221	1	BUTTON PLUG

** Added additional line under item 9.*

PARTIAL VIEW FROM UNDER DASH

PARTIAL VIEW FROM ABOVE DASH WITH PANEL REMOVED FOR CLARITY

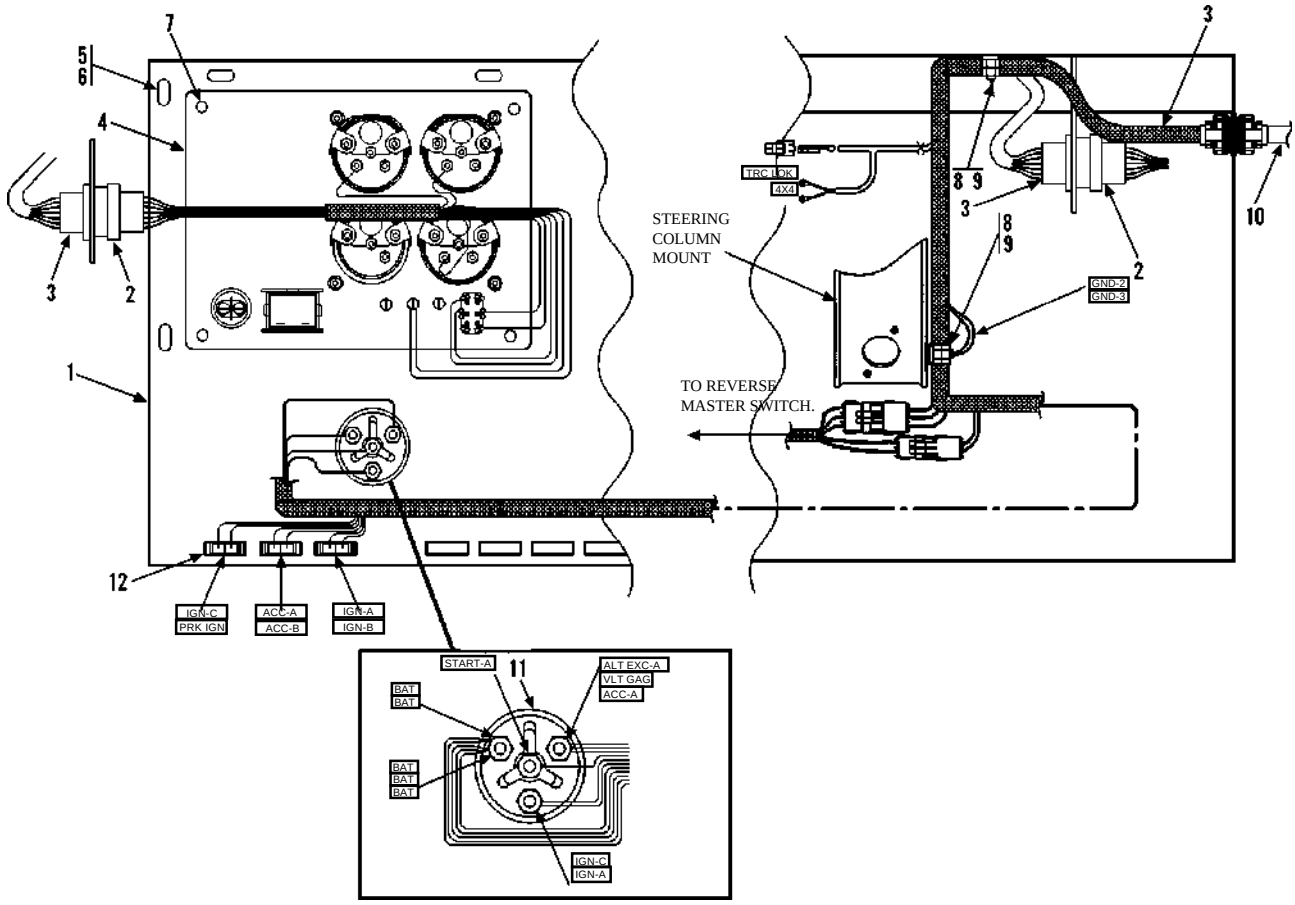

ENLARGED VIEW OF IGNITION SWITCH CONNECTION

Item	Part No.	Qty.	Description Of Part
1	9114-1193	1	DASH PANEL
2		Ref	GAUGE PANEL WIRING HARNESS (see page 11-2 for details)
3	9114-3193	1	DASH PANEL WIRING HARNESS
4		Ref	GAUGE PANEL (see page 11-6 for details)
5	7714-3003	7	WHIZ-LOC SCREW
6	7714-3006	4	WHIZ-LOC NUT

Item	Part No.	Qty.	Description Of Part
7	8830-1141	4	HEX SOC BUTT HD CAPSCREW, 5/16-18 x 3/4
8	2486-1120	2	CLAMP
9	8850-1006	3	HEX NUT, 3/8-16
10		Ref	ENGINE WIRING HARNESS (see page 11-1 for details)
11	9103-3317	1	IGNITION SWITCH
*	7738-4578	1	KEY
12	7736-3268	3	15 AMP FUSE

** Added additional line under item 11.*

ELECTRICAL
(9108-5034) Gauge Panel Assy (534C-6)

Starting Serial No. 0188002
Original Issue 1-90
Revised 6-27-07

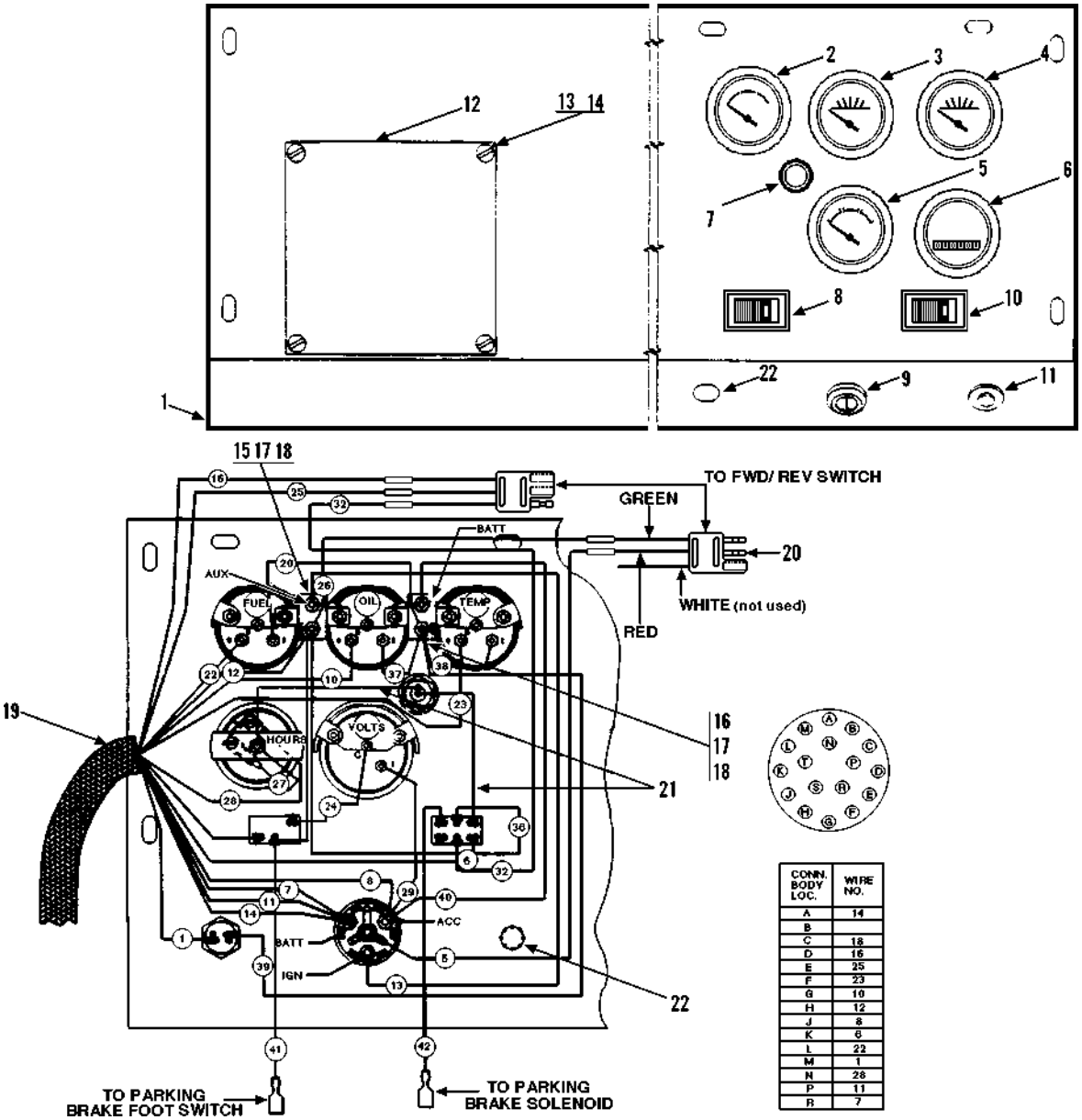

CONN. BODY LOC.	WIRE NO.
A	14
B	
C	18
D	16
E	25
F	23
G	10
H	12
J	8
K	6
L	22
M	1
N	28
P	11
R	7

Item	Part No.	Qty.	Description Of Part
	9108-5034	1	GAUGE PANEL ASSY (includes all items)
1	9108-1371	1	DASH PANEL
2	9020-5687	1	WATER TEMP. GAUGE
3	9103-3247	1	OIL PRESSURE GAUGE
4	9020-5686	1	FUEL GAUGE
5	7738-3709	1	VOLTMETER
6	9020-5688	1	HOURMETER
7	9103-3084	1	BRAKE WARNING LIGHT
8	9108-3259	1	ROCKER SWITCH
9	9103-3317	1	IGN. START SWITCH
*	7738-4578	1	KEY
10	9108-3084	1	ROCKER SWITCH

Item	Part No.	Qty.	Description Of Part
11	9020-0434	1	BUTTON SWITCH
12	9108-1480	1	COVER PLATE
13	8830-1141	4	ROUND HD MACHINE SCREW, 5/16-18X3/4
14	8855-1010	4	LOCKWASHER, 5/16
15	9108-3260	1	15A CIRCUIT BREAKER
16	9103-3111	1	10A CIRCUIT BREAKER
17	8855-4917	4	LOCKWASHER, #10
18	8850-1613	4	HEX NUT, #10-32
19	9108-3110	1	DASH WIRING HARNESS
20	8348-3114	1	3-WAY
21	8698-3188	16	EYELET #10
22	9100-3065	1	BUTTON PLUG

** Added additional line under item 9.*

PARTIAL VIEW FROM UNDER DASH

PARTIAL VIEW FROM ABOVE DASH WITH PANEL REMOVED FOR CLARITY

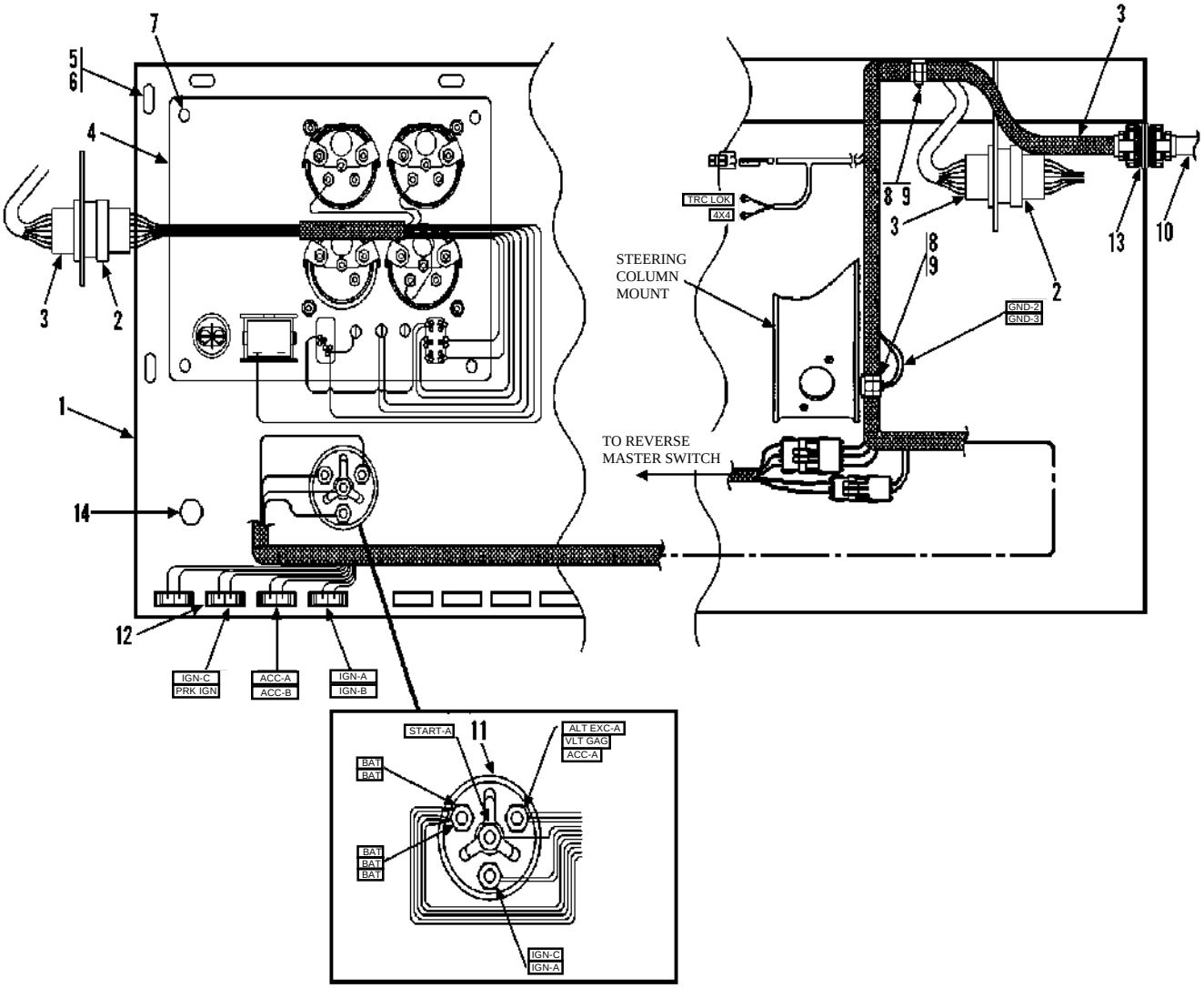

ENLARGED VIEW OF IGNITION SWITCH CONNECTION

Item	Part No.	Qty.	Description Of Part
1	9114-1193	1	DASH PANEL
2		Ref	GAUGE PANEL WIRING HARNESS (see page 11-2 for details)
3	9114-3193	1	DASH PANEL WIRING HARNESS
4		Ref	GAUGE PANEL (see page 11-6 for details)
5	7714-3003	7	WHIZ-LOC SCREW
6	7714-3006	4	WHIZ-LOC NUT

Item	Part No.	Qty.	Description Of Part
7	8830-1141	4	HEX SOC BUTT HD CAPSCREW, 5/16-18 x 3/4
8	2486-1120	2	CLAMP
9	8850-1006	3	HEX NUT, 3/8-16
10		Ref	ENGINE WIRING HARNESS (see page 11-1 for details)
11	9103-3317	1	IGNITION SWITCH
*	7738-4578	1	KEY
12	7736-3268	3	15 AMP FUSE

** Added additional line under item 11.*

PARTIAL VIEW FROM UNDER DASH

PARTIAL VIEW FROM ABOVE DASH WITH PANEL REMOVED FOR CLARITY

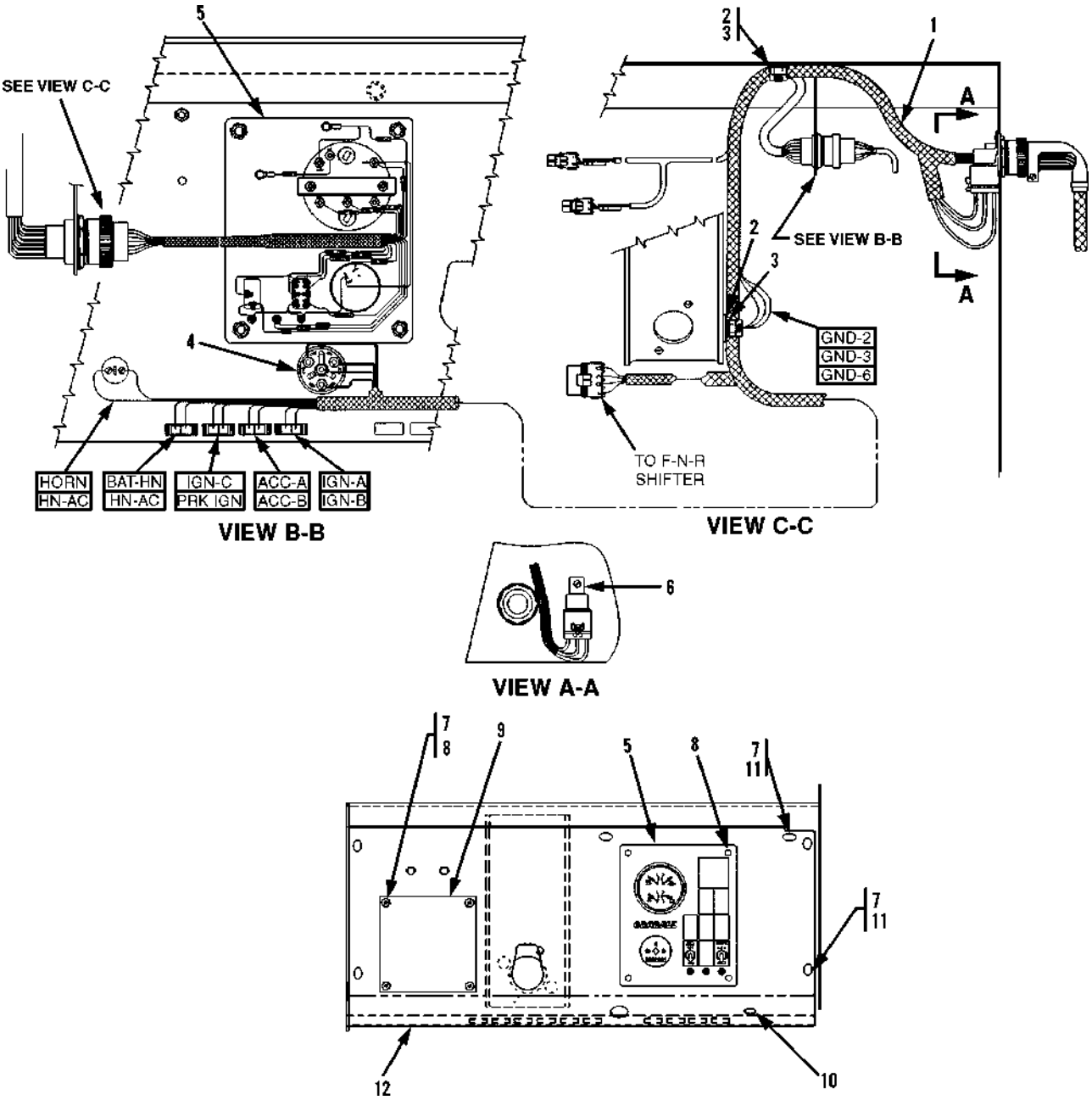

Item	Part No.	Qty.	Description Of Part
1		Ref	DASH HARNESS ASSY (see page 11-9 for details)
2	8856-1006	3	FLAT WASHER, 1/2
3	2486-1170	2	CLAMP
4	9103-3317	1	IGNITION
*	7738-4578	1	KEY
5		Ref	GAUGE PANEL (see page 11-7 for details)

Item	Part No.	Qty.	Description Of Part
6	8832-1029	1	SELF-TAPPING SCREW, #10-24X3/8
7	7714-3006	8	WHIZ-LOC NUT, 5/16-18
8	8826-1022	8	SOCKET BUTTON HD CAPSCREW, 5/16-18X3/4
9	9114-1480	1	COVER
10	2477-1004	1	HORN BUTTON
11	7714-3003	7	WHIZ-LOC SCREW, 5/16-18X5/8
12	9114-1513	1	DASH PANEL

** Added additional line under item 4.*

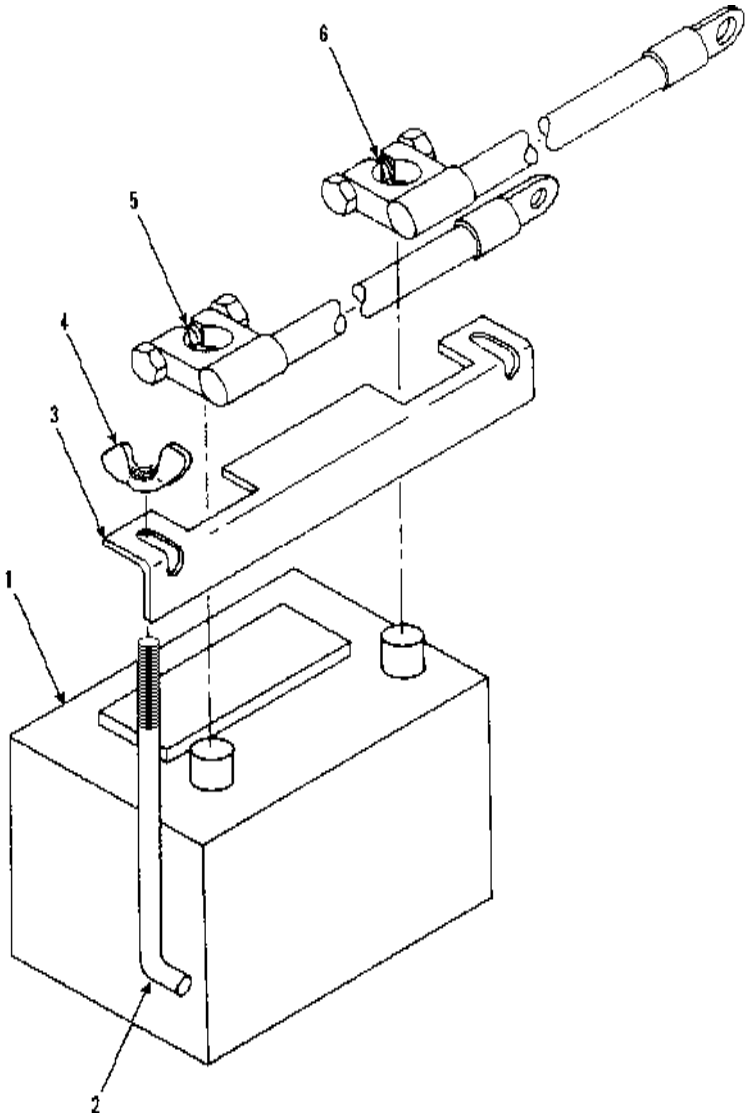

Item	Part No.	Qty.	Description Of Part
1		1	BATTERY (purchase locally)
2	9020-0382	2	HOLD DOWN STUD
3	9108-1330	1	BATTERY HOLD DOWN
4	9002-7239	2	WING NUT 5/16-18
5	9112-3033	1	POSITIVE BATTERY CABLE
6	9112-3032	1	NEGATIVE BATTERY CABLE

** Removed part number from battery, this item must be purchased locally.*

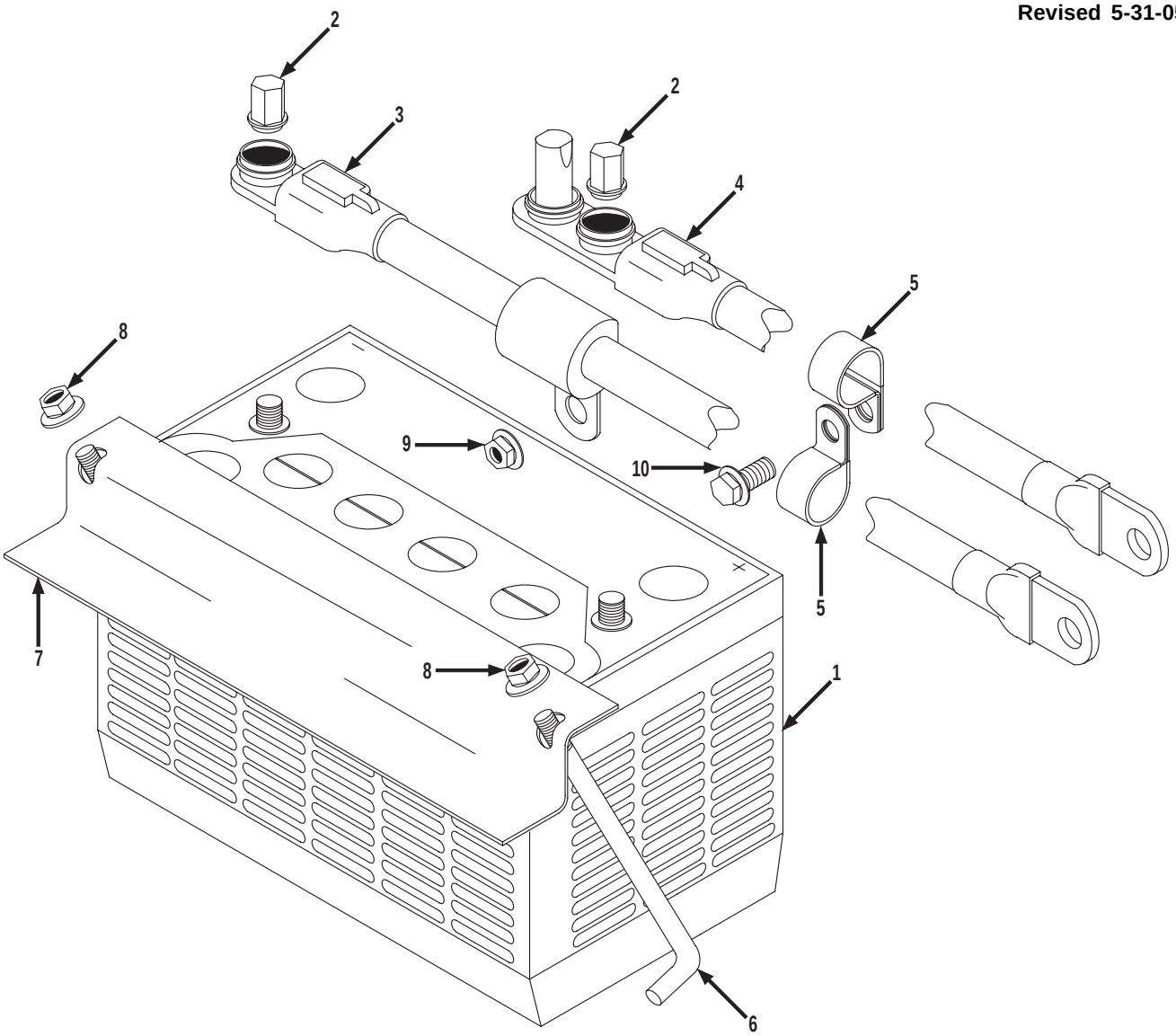

Item	Part No.	Qty.	Description Of Part
* 1	8097-3021	1	BATTERY, (12 volt, 1000 amps), TOP STUD, 3/8-16 UNC THREAD, BCI GROUP 31
2	7738-3567	2	BATTERY POST TERMINAL
3	9114-3124	1	NEGATIVE BATTERY CABLE
4	9114-3099	1	POSITIVE BATTERY CABLE
5	8594-1017	4	SUPPORT CLAMP
6	9108-1640	2	HOLD DOWN STUD
7	9114-1429	1	BATTERY HOLD DOWN
8	7714-3006	2	WHIZ LOCKNUT, 5/16-18
9	7714-3015	1	WHIZ LOCKNUT, 3/8-16
10	7714-3003	2	WHIZ LOCK SCREW, 5/16-18X5/8
	1440-3416	AR	DI-ELECTRIC GREASE (add to caps of jump terminals on battery cables)
			NOTE: ONLY ITEMS WITH PART NUMBERS ARE AVAILABLE FOR SERVICE.

** Added part number & changed description on item 1.*

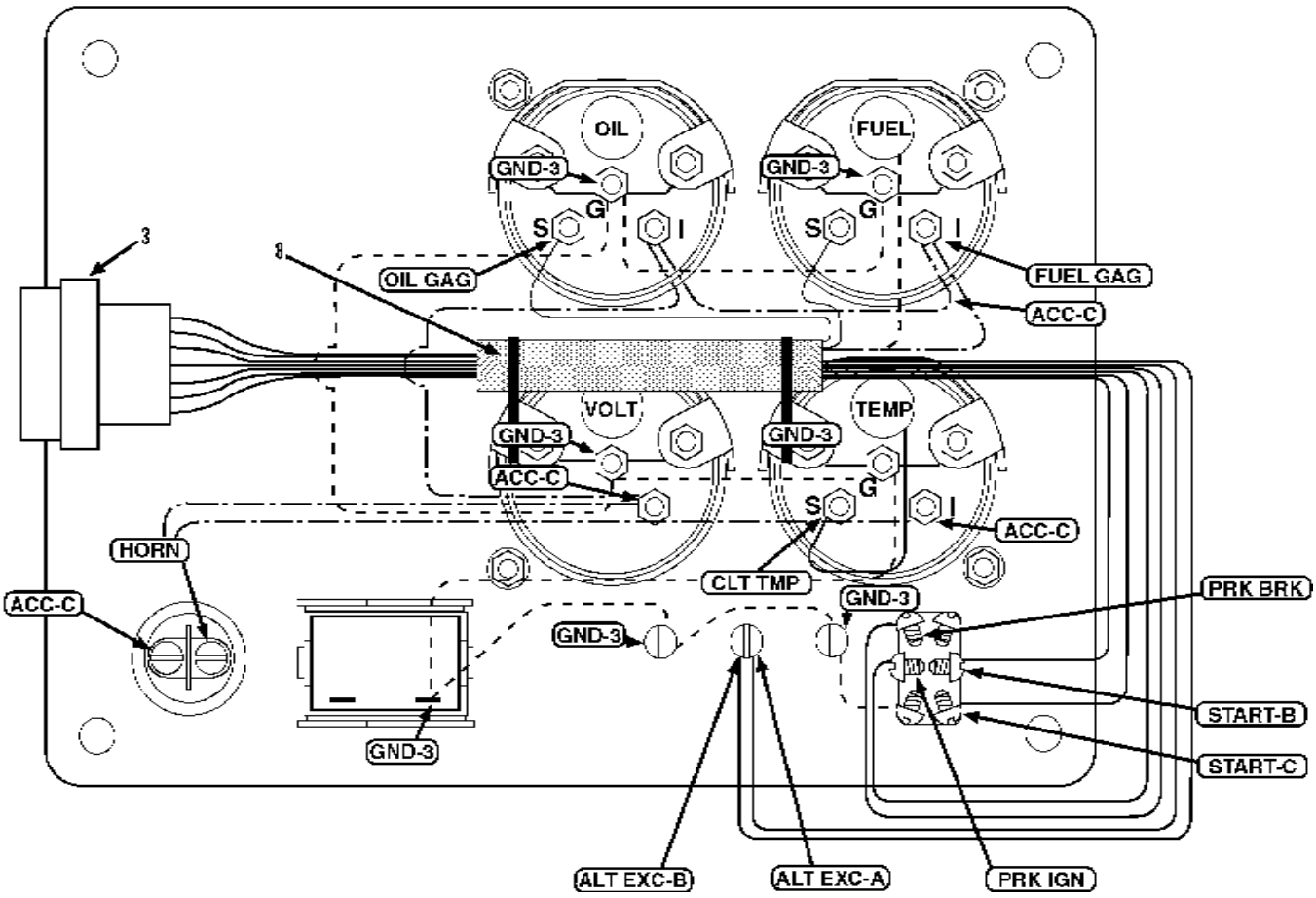
OIL
FUEL
GND-3
GND-3
G
S
I
S
G
I
3
8
OIL GAG
FUEL GAG
ACC-C
VOLT
TEMP
GND-3
GND-3
ACC-C
G
S
I
ACC-C
HORN
CLT TMP
GND-3
PRK BRK
ACC-C
GND-3
START-B
GND-3
START-C
ALT EXC-B
ALT EXC-A
PRK IGN

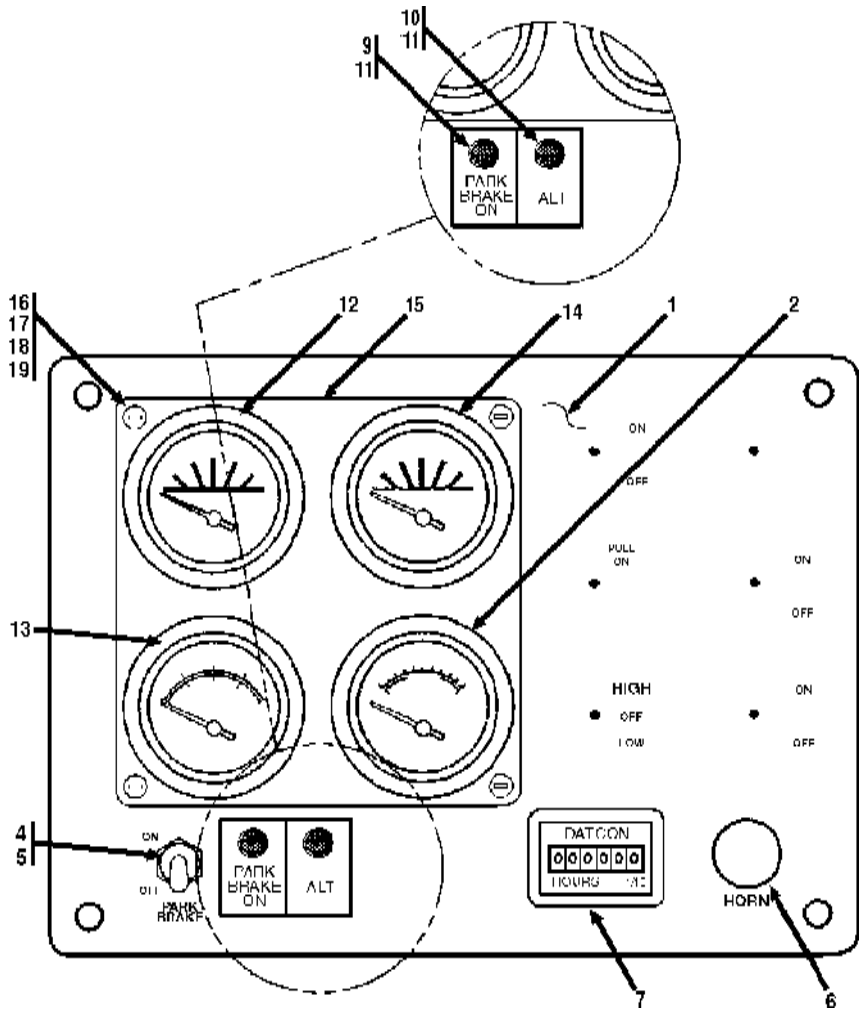

Item	Part No.	Qty.	Description Of Part
	9114-5031	1	GAUGE PANEL ASSY (includes all items)
1	9114-3138	1	FORMICA DASH PANEL
	9114-3137	1	PANEL WIRING HARNESS
2	7738-3709	1	VOLTMETER
3	9114-3137	1	PANEL WIRING HARNESS
4	9114-3114	1	TOGGLE - DPDT
5	7738-3470	2	BOOT
6	2477-1004	1	BUTTON
7	9114-3130	1	HOUR METER
8	9105-3419	2	TIE WRAP

Item	Part No.	Qty.	Description Of Part
9	9114-3128	2	AMBER DASH LIGHT
10	9114-3127	1	RED DASH LIGHT
11	9114-3129	3	TINNERMAN NUT
12	9020-5686	1	FUEL GAUGE
13	9020-5687	1	WATER TEMP. GAUGE
14	9103-3247	1	OIL PRESSURE GAUGE
15	9114-1278	1	GAUGE PROTECTOR
16	9103-3277	4	RUBBER SPACER
17	8830-1075	4	MACHINE SCREW, #8-32X1"
18	8856-1104	4	STEEL PUNCHED WASHER
19	8850-1610	4	HEX NUT, #8-32

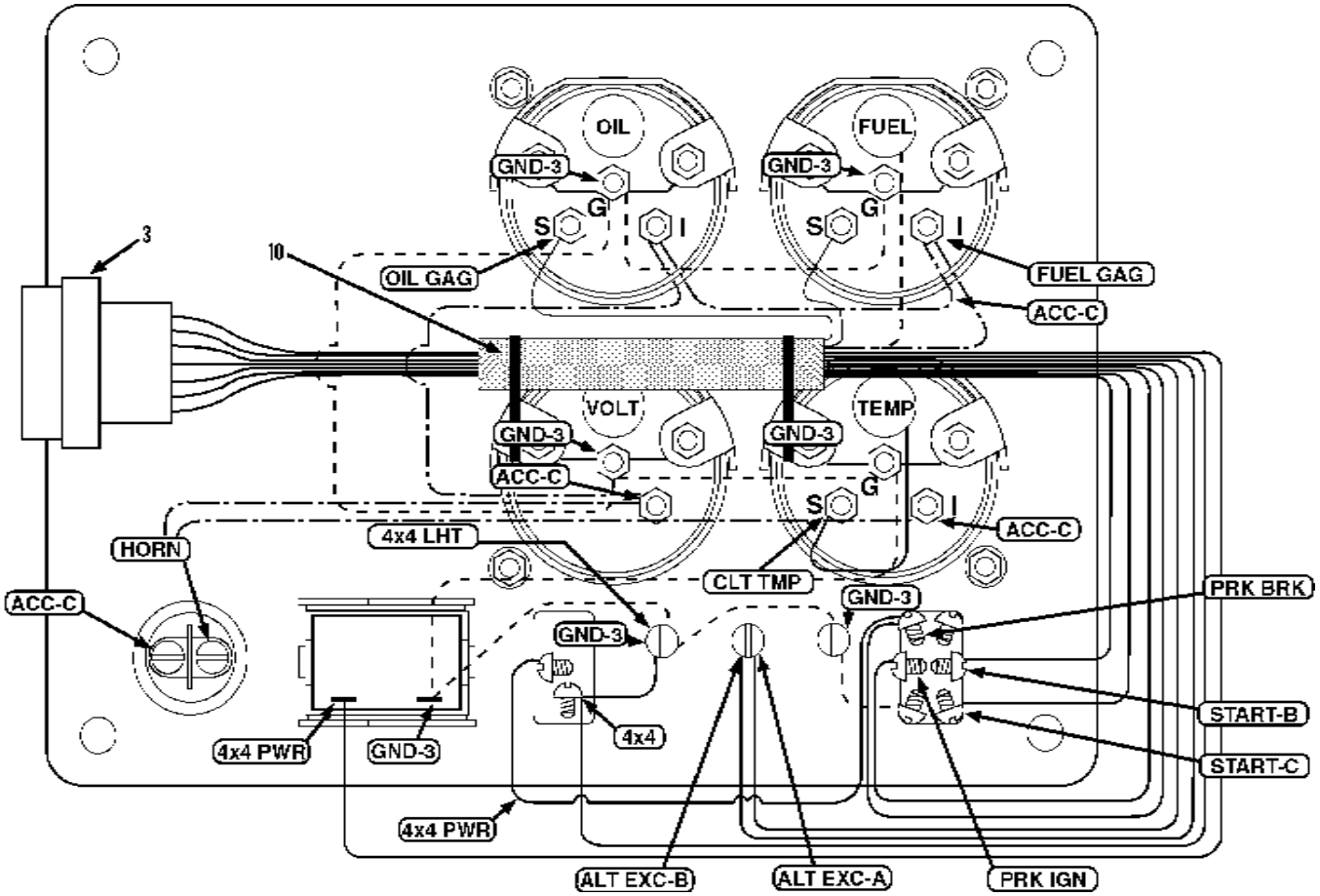
OIL
FUEL
GND-3
GND-3
S
G
I
S
G
I
3
10
OIL GAG
FUEL GAG
ACC-C
VOLT
TEMP
GND-3
GND-3
ACC-C
S
G
I
ACC-C
HORN
4x4 LHT
CLT TMP
GND-3
PRK BRK
ACC-C
GND-3
4x4
START-B
START-C
4x4 PWR
GND-3
4x4 PWR
ALT EXC-B
ALT EXC-A
PRK IGN

ELECTRICAL
(9114-5031) Gauge Panel Assembly
Starting Serial No. 0288777
Original Issue 10-95

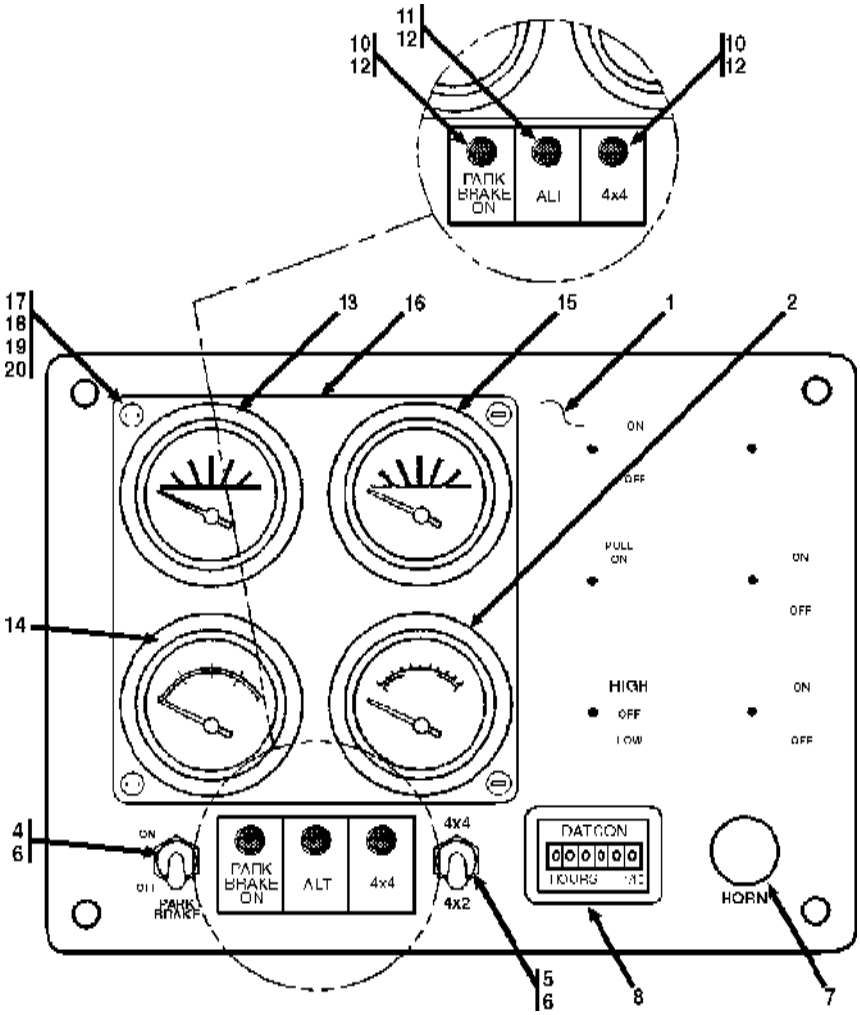

Item	Part No.	Qty.	Description Of Part
	9114-5031	1	GAUGE PANEL ASSY (includes all items)
1	9114-3138	1	FORMICA DASH PANEL
	9114-3137	1	PANEL WIRING HARNESS
2	7738-3709	1	VOLTMETER
3	9114-3137	1	PANEL WIRING HARNESS
4	9114-3114	1	TOGGLE - DPDT
5	7738-3467	1	TOGGLE - SPST
6	7738-3470	2	BOOT
7	2477-1004	1	BUTTON
8	9114-3130	1	HOUR METER
9	9105-3419	2	TIE WRAP

Item	Part No.	Qty.	Description Of Part
10	9114-3128	2	AMBER DASH LIGHT
11	9114-3127	1	RED DASH LIGHT
12	9114-3129	3	TINNERMAN NUT
13	9020-5686	1	FUEL GAUGE
14	9020-5687	1	WATER TEMP. GAUGE
15	9103-3247	1	OIL PRESSURE GAUGE
16	9114-1278	1	GAUGE PROTECTOR
17	9103-3277	4	RUBBER SPACER
18	8830-1075	4	MACHINE SCREW, #8-32X1"
19	8856-1104	4	STEEL PUNCHED WASHER
20	8850-1610	4	HEX NUT, #8-32

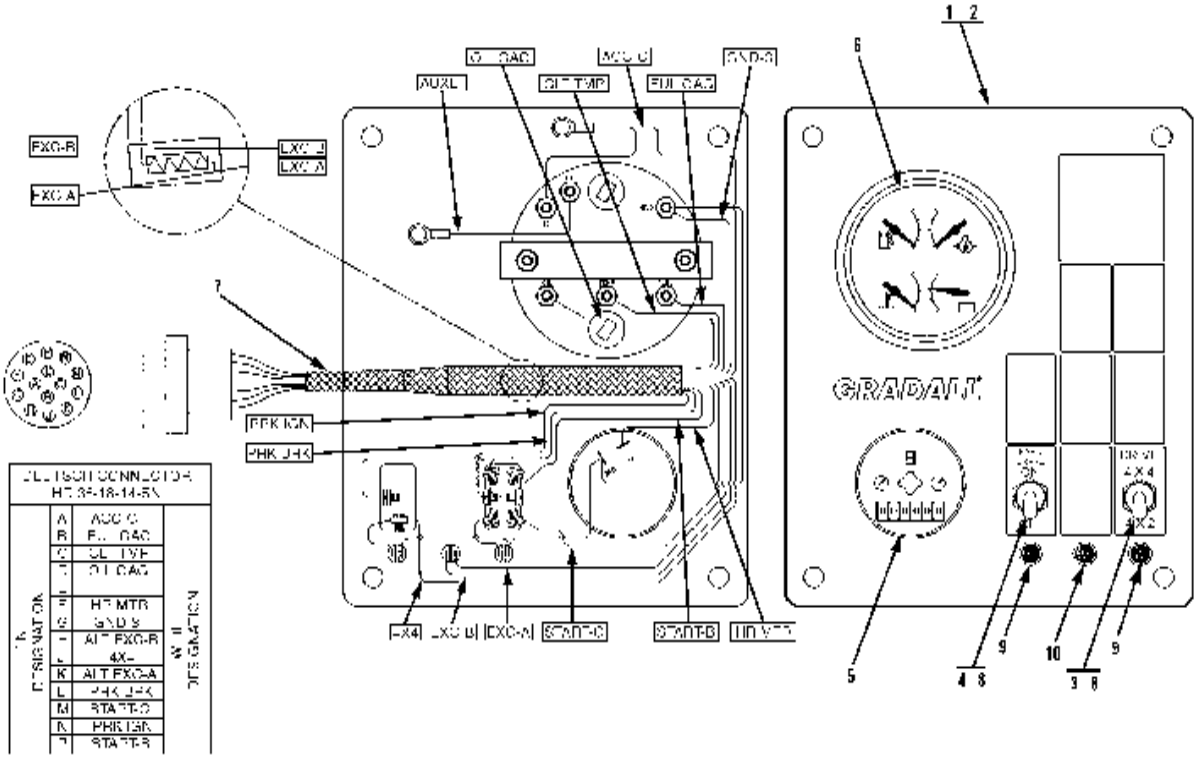

Item	Part No.	Qty.	Description Of Part
	9114-3331	1	GAUGE PANEL (includes all items)
1	9136-4004	1	PANEL ASSY (includes front & back plates, acrylic lens & std. labels)
2	9136-4005	1	RUBBER BOOT
3	7738-3467	1	TOGGLE SWITCH
4	9114-3114	1	PARK BRAKE SWITCH
5	9136-4006	1	HOURMETER
6	9136-4007	1	4-IN-1 GAUGE (oil, fuel, temp, volts)
7	9136-4008	1	WIRE HARNESS
8	7738-3470	2	SEAL
9	9114-3128	2	AMBER INDICATOR LIGHT
10	9114-3127	1	RED INDICATOR LIGHT

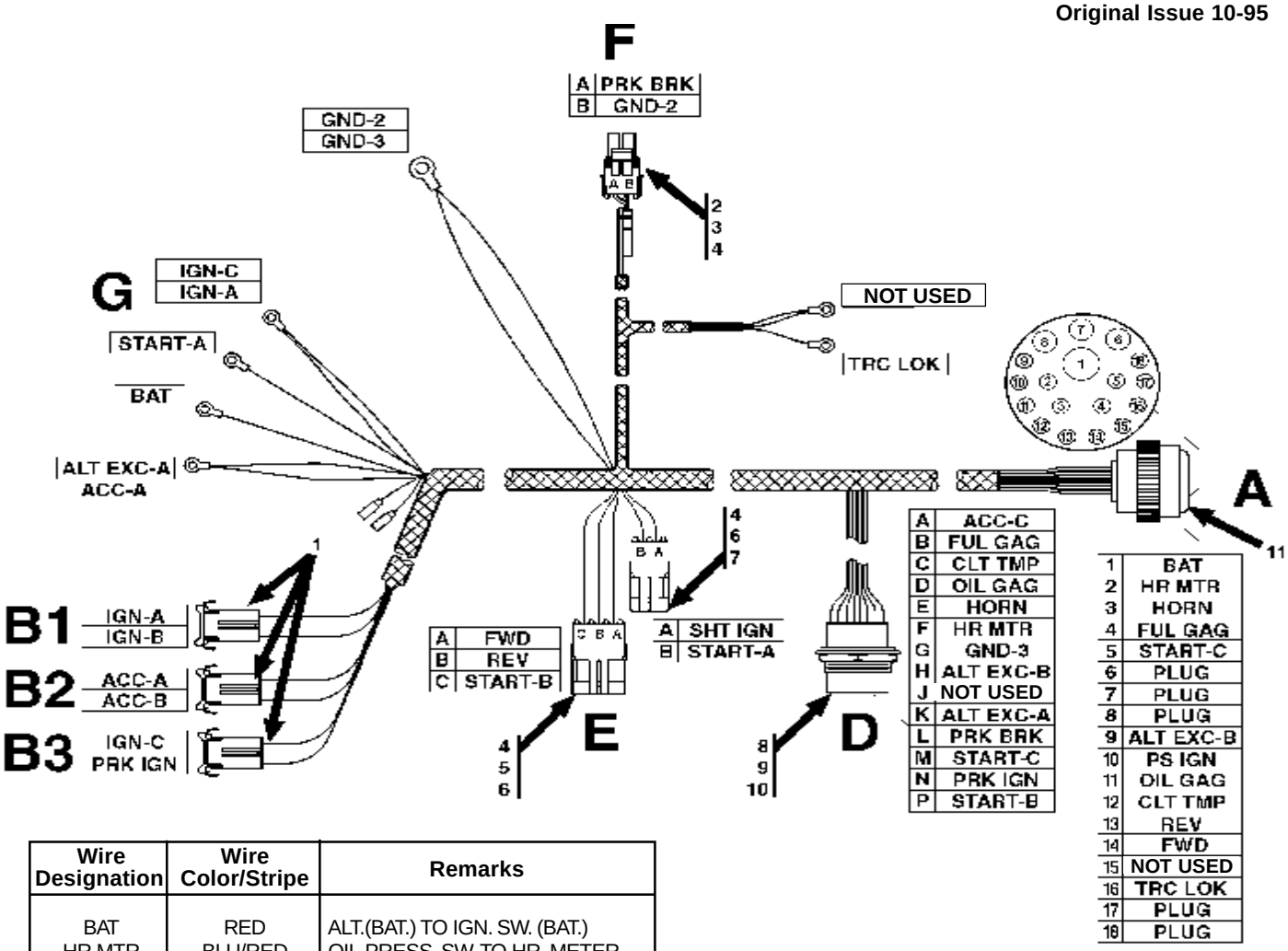

Wire Designation	Wire Color/Stripe	Remarks
BAT	RED	ALT.(BAT.) TO IGN. SW. (BAT.)
HR MTR	BLU/RED	OIL PRESS. SW. TO HR. METER
HORN	VIOLET/YELO	HORN
FUL GAG	BLU/BLK	FUEL GAUGE
START-C	VIOLET/BRN	STARTER RELAY
ALT EXC-B	VIOLET/RED	ALTERNATOR EXCITER (ALT. PLUG)
PS IGN	ORNG/YELO	OIL PRESS. SW.
OIL GAG	BLU/BRN	OIL PRESS. GAUGE
CLT TMP	BLU/VIOLET	WATER TEMP. GAUGE
REV	BRN/YELO	FWD/REV VALVE
FWD	BRN/WHITE	FWD/REV VALVE
4x4	BRN	4x4 VALVE
TRC LOK	BRN/GREY	TRACTION LOCK VALVE
PRK BRK	VIOLET	PARK BRAKE VALVE
GND-2	BLK	FWD/REV VALVE TO GROUND
GND-3	BLK	2/4x4 VALVE TO GROUND
SPL ACC	ORANGE	FREE, FUSED ACC
SHT IGN	ORNG/BRN	POWER TO SHIFTER
PRK IGN	ORNG/BLK	POWER TO PARK BRAKE
ACC-C	ORNG/RED	ACCESSORY POWER
ACC-A	ORNG/TAN	POWER TO ACC FUSE
ACC-B	ORNG/BLU	FUSED POWER TO ACC
IGN-A	ORNG/GREY	POWER TO IGN FUSE
IGN-B	ORNG/LT.GRN	FUSED POWER TO IGN
START-A	VIOLET/BRN	PARK BRAKE SWITCH
START-B	VIOLET/BRN	PARK BRAKE SWITCH
ALT EXC-A	VIOLET/RED	INDICATOR LIGHT
IGN-C	ORNG/DK GRN	FUSED POWER TO IGN
SFL ACC2	ORNG/VIOLET	FREE, FUSED ACC

Item	Part No.	Qty.	Description Of Part
	9114-3193	1	DASH HARNESS (includes all items)
1	9114-3108	3	FUSE HOLDER
2	8096-3057	1	TOWER (includes items 3 and 4)
3	8096-3068	2	FEMALE PIN TERMINALS
4	8096-3066	3	CABLE SEALS
5	8096-3060	1	SHROUD (includes items 4 and 6)
6	8096-3069	5	MALE PIN TERMINALS
7	8096-3058	1	SHROUD (includes items 4 and 6)
8	7736-3225	1	RECEPTACLE (includes items 9 and 10)
9	7736-3264	1	PANEL NUT
10	7736-3263	1	LOCKWASHER
11	8348-1289	1	PLUG CONNECTOR
			NOTE: ONLY ITEMS WITH PART NUMBERS ARE AVAILABLE FOR SERVICE.

ELECTRICAL
(9114-3193) Dash Harness
Starting Serial No. 0288777
Original Issue 10-95

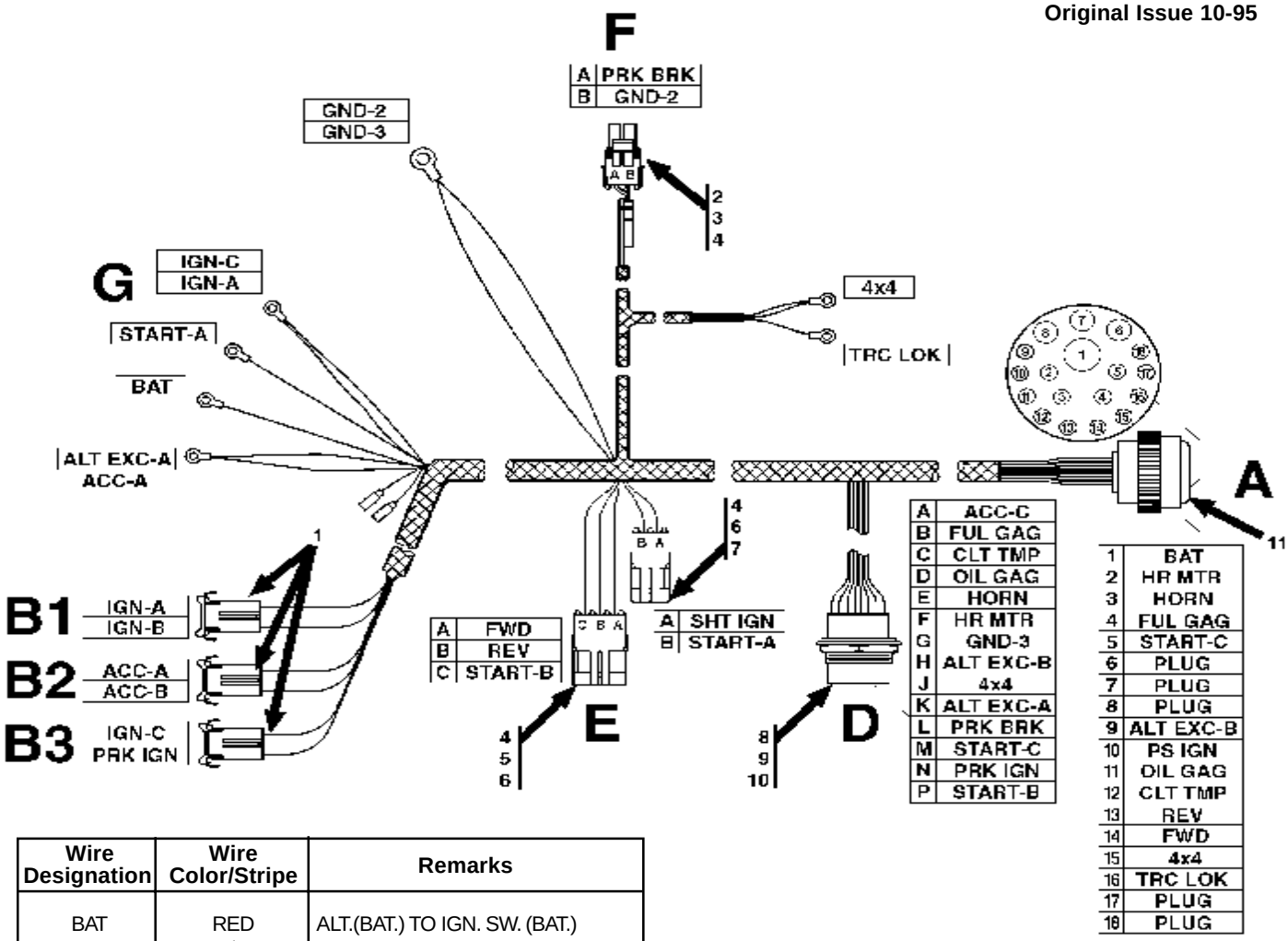

Wire Designation	Wire Color/Stripe	Remarks
BAT	RED	ALT.(BAT.) TO IGN. SW. (BAT.)
HR MTR	BLU/RED	OIL PRESS. SW. TO HR. METER
HORN	VIOLET/YELO	HORN
FUL GAG	BLU/BLK	FUEL GAUGE
START-C	VIOLET/BRN	STARTER RELAY
ALT EXC-B	VIOLET/RED	ALTERNATOR EXCITER (ALT. PLUG)
PS IGN	ORNG/YELO	OIL PRESS. SW.
OIL GAG	BLU/BRN	OIL PRESS. GAUGE
CLT TMP	BLU/VIOLET	WATER TEMP. GAUGE
REV	BRN/YELO	FWD/REV VALVE
FWD	BRN/WHITE	FWD/REV VALVE
4x4	BRN	4x4 VALVE
TRC LOK	BRN/GREY	TRACTION LOCK VALVE
PRK BRK	VIOLET	PARK BRAKE VALVE
GND-2	BLK	FWD/REV VALVE TO GROUND
GND-3	BLK	2/4x4 VALVE TO GROUND
SPL ACC	ORANGE	FREE, FUSED ACC
SHT IGN	ORNG/BRN	POWER TO SHIFTER
PRK IGN	ORNG/BLK	POWER TO PARK BRAKE
ACC-C	ORNG/RED	ACCESSORY POWER
ACC-A	ORNG/TAN	POWER TO ACC FUSE
ACC-B	ORNG/BLU	FUSED POWER TO ACC
IGN-A	ORNG/GREY	POWER TO IGN FUSE
IGN-B	ORNG/LT.GRN	FUSED POWER TO IGN
START-A	VIOLET/BRN	PARK BRAKE SWITCH
START-B	VIOLET/BRN	PARK BRAKE SWITCH
ALT EXC-A	VIOLET/RED	INDICATOR LIGHT
IGN-C	ORNG/DK GRN	FUSED POWER TO IGN
SFL ACC2	ORNG/VIOLET	FREE, FUSED ACC

Item	Part No.	Qty.	Description Of Part
	9114-3193	1	DASH HARNESS (includes all items)
1	9114-3108	3	FUSE HOLDER
2	8096-3057	1	TOWER (includes items 3 and 4)
3	8096-3068	2	FEMALE PIN TERMINALS
4	8096-3066	3	CABLE SEALS
5	8096-3060	1	SHROUD (includes items 4 and 6)
6	8096-3069	5	MALE PIN TERMINALS
7	8096-3058	1	SHROUD (includes items 4 and 6)
8	7736-3225	1	RECEPTACLE (includes items 9 and 10)
9	7736-3264	1	PANEL NUT
10	7736-3263	1	LOCKWASHER
11	8348-1289	1	PLUG CONNECTOR
			NOTE: ONLY ITEMS WITH PART NUMBERS ARE AVAILABLE FOR SERVICE.

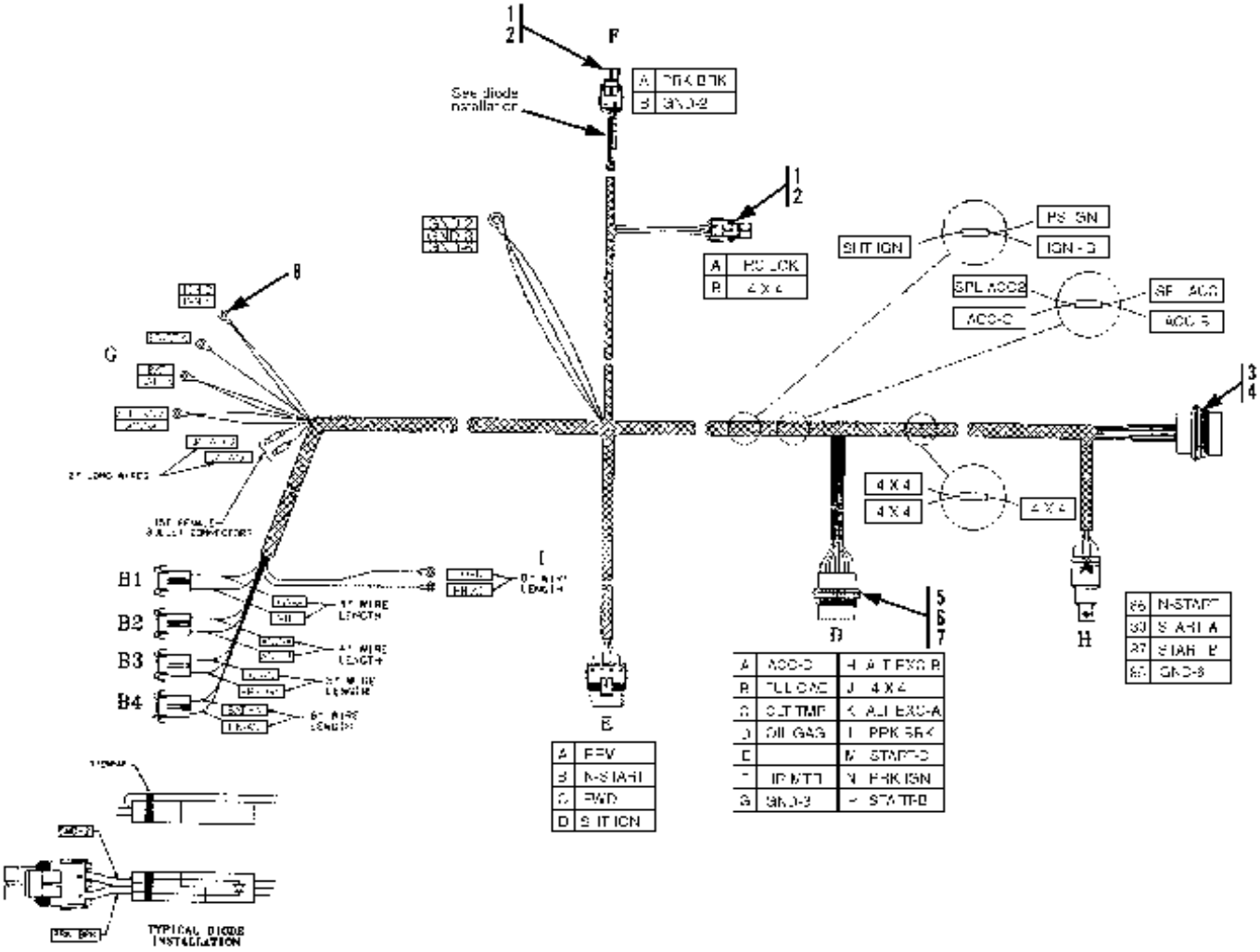

Item	Part No.	Qty.	Description Of Part
	9114-3349	1	DASH HARNESS (includes all items)
1	8096-3057	2	TOWER (includes item 2)
2	8096-3068	4	FEMALE PIN TERMINALS
	8096-3066	6	CABLE SEALS
3	8348-1286	1	PANEL NUT
4	8348-1285	1	LOCKWASHER
5	7736-3264	1	PANEL NUT
6	7736-3263	1	LOCKWASHER
7	7736-3225	1	RECEPTACLE
8	9114-3108	4	SNAP-IN FUSE

THE FOLLOWING ITEMS MUST BE ORDERED, ACCORDING TO MACHINE MODEL, IN ADDITION TO THE COMMON DECAL KIT TO MAKE A COMPLETE DECAL SET FOR EACH MACHINE. FOR LIST OF ITEMS INCLUDED IN COMMON KIT , SEE PAGES 12-2 AND 12-3.

MODEL 522

Item	Part No.	Qty.	Description Of Part
	9108-4283	AR	COMMON DECAL KIT
1	9108-3321	1	CAPACITY DECAL
2	9109-3004	2	"522"

MODEL 524

Item	Part No.	Qty.	Description Of Part
	9108-4283	AR	COMMON DECAL KIT
1	9108-3321	1	CAPACITY DECAL
2	9108-3320	2	"524"

MODEL 532C-6

Item	Part No.	Qty.	Description Of Part
	9108-4283	AR	COMMON DECAL KIT
1	9112-3117	1	CAPACITY DECAL
2	9113-3001	2	"532C"
3	9103-3018	2	"6"

MODEL 534C-6

Item	Part No.	Qty.	Description Of Part
	9108-4283	AR	COMMON DECAL KIT
1	9112-3117	1	CAPACITY DECAL
2	9112-3035	2	"534C"
3	9103-3018	2	"6"

MODEL 534C-6 *TURBO*

Item	Part No.	Qty.	Description Of Part
	9108-4283	AR	COMMON DECAL KIT
1	9112-3117	1	CAPACITY
2	9112-3035	2	"534C"
3	9103-3018	2	"6"
4	9132-3001	1	INSTRUCTION
5	9132-3002	1	"TURBO," L.H.
6	9132-3003	1	"TURBO," R.H.

**Revised serial number due to addition of new design.*

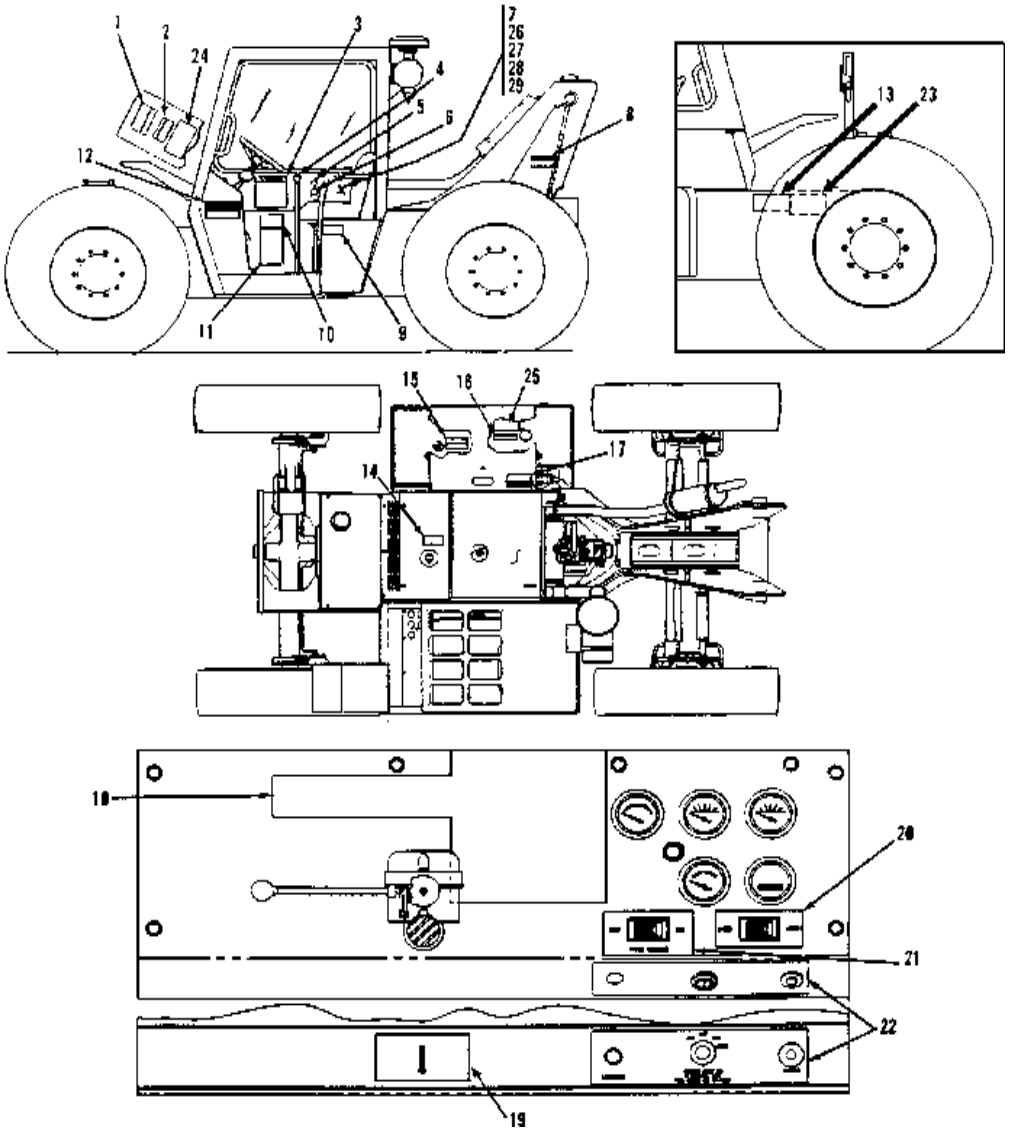

Item	Part No.	Qty.	Description Of Part
	9108-4283	1	522 & 34C COMMON DECAL KIT (includes all items on page 12-2 except items 11, 13, 18 & 26 thru 29. Also includes all items except items 8, 9, 11 & items 13 thru 16 on page 12-3)
1	8360-1011	1	ACCIDENT PREVENTION DECAL
2	9104-3215	1	LIFTING PERSONNEL DECAL
3	9106-3047	1	WARNING DECAL
4	9130-3047	1	BOOM OPERATION DECAL
5	9108-3317	1	TILT DECAL
6	9108-3318	1	SWAY DECAL
7	9108-3324	1	SERVICE INSTRUCTION DECAL
8	9104-3209	2	PINCH POINT DECAL
9	7733-3027	1	MADE IN USA DECAL
10	9100-3030	1	PATENT DECAL
11	9112-3110	1	SERIAL NO. & ATTACH PLATE
12	9104-3211	1	RIDERS WARNING DECAL
13	9108-3494	1	BATTERY WARNING DECAL
14	9104-3210	1	COOLING SYSTEM CAUTION DECAL

Item	Part No.	Qty.	Description Of Part
15	9108-3510	1	FUEL WARNING PLATE
16	9108-3509	1	HYDRAULIC OIL PLATE
17	9103-3011	1	WARNING DECAL
18	9112-3117	1	CAPACITY CHART
19	9108-3314	1	TRACTION DECAL
20	9108-3270	1	2WD-4WD DECAL
21	9108-3269	1	PARK BRAKE DECAL
22	9108-3268	1	INSTRUMENT PANEL DECAL
23	9108-3497	1	JUMP START WARNING
24	9108-3324	1	SERVICE INSTRUCTION DECAL
25	9108-3492	1	OIL WARNING DECAL
26	9103-3102	1	MANUAL HOLDER
27	9103-1268	1	FIEI SAFETY MANUAL
38	9103-4001	1	SAFETY MANUAL
29	9108-4210	1	OPERATORS MANUAL
	1440-4645	AR	BOESHIELD METAL PROTECTANT, 12 OZ. SPRAY CAN
	1440-4646	AR	BOESHIELD METAL PROTECTANT, 1 GAL. CAN

Revised serial number due to addition of new design.

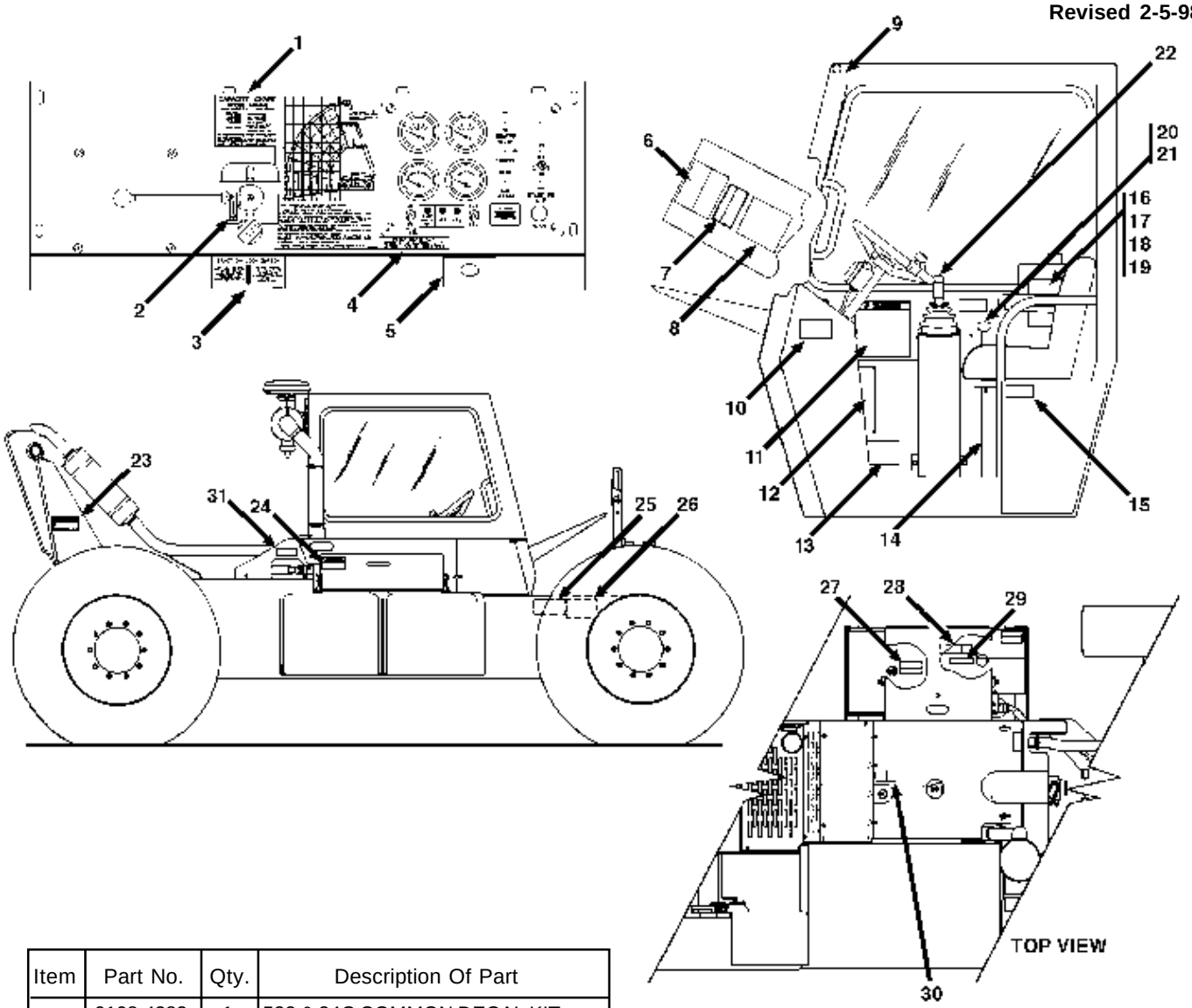

Item	Part No.	Qty.	Description Of Part
	9108-4283	1	522 & 34C COMMON DECAL KIT (includes all items pages 12-1 & 12-2 except items 8 & 9 on page 12-2) (see page 12-3)
1	9112-3117	1	CAPACITY CHART
2	9108-3428	1	FWD/REV DECAL
3	9108-3314	1	TRACTION DECAL
4	9114-3182	1	PARK BRAKE DECAL
5	9114-3120	1	INSTRUMENT PANEL DECAL
6	8360-1011	1	ACCIDENT PREVENTION DECAL
7	9104-3215	1	LIFTING PERSONNEL DECAL
8	9108-3324	1	SERVICE INSTRUCTION DECAL
9	9103-3320	1	TILT GAUGE
10	9104-3211	1	RIDERS WARNING DECAL
11	9106-3047	1	WARNING DECAL
12	9112-3110	1	SERIAL NO. & ATTACH PLATE
13	9100-3030	1	PATENT DECAL
14	9108-3492	1	OIL WARNING DECAL
15	7733-3027	1	MADE IN USA DECAL
16	9103-3102	1	MANUAL HOLDER
17	9103-4001	1	SAFETY MANUAL
18	9103-1268	1	SAFETY MANUAL
19	9108-4210	1	OPERATOR MANUAL

Item	Part No.	Qty.	Description Of Part
20	9108-3318	1	SWAY DECAL
21	9108-3317	1	TILT DECAL
22	9130-3047	1	BOOM OPERATION DECAL
23	9104-3209	2	PINCH POINT DECAL
24	9103-3011	1	WARNING DECAL
25	9108-3494	1	BATTERY WARNING
26	9108-3497	1	JUMP START WARNING
27	9108-3510	1	FUEL WARNING PLATE
28	9108-3492	1	OIL WARNING DECAL
29	9108-3509	1	HYDRAULIC OIL PLATE
30	9104-3210	1	COOLING SYSTEM CAUTION DECAL
	1440-4645	AR	BOESHIELD METAL PROTECTANT, 12 OZ. SPRAY CAN
	1440-4646	AR	BOESHIELD METAL PROTECTANT, 1 GAL. CAN

**Revised serial number due to addition of new design.*

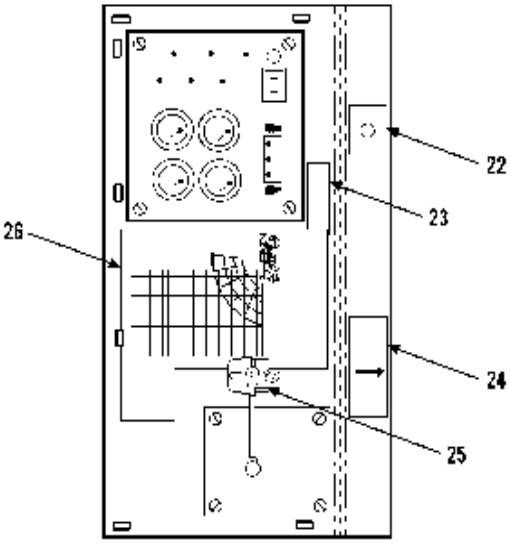

VIEW A-A

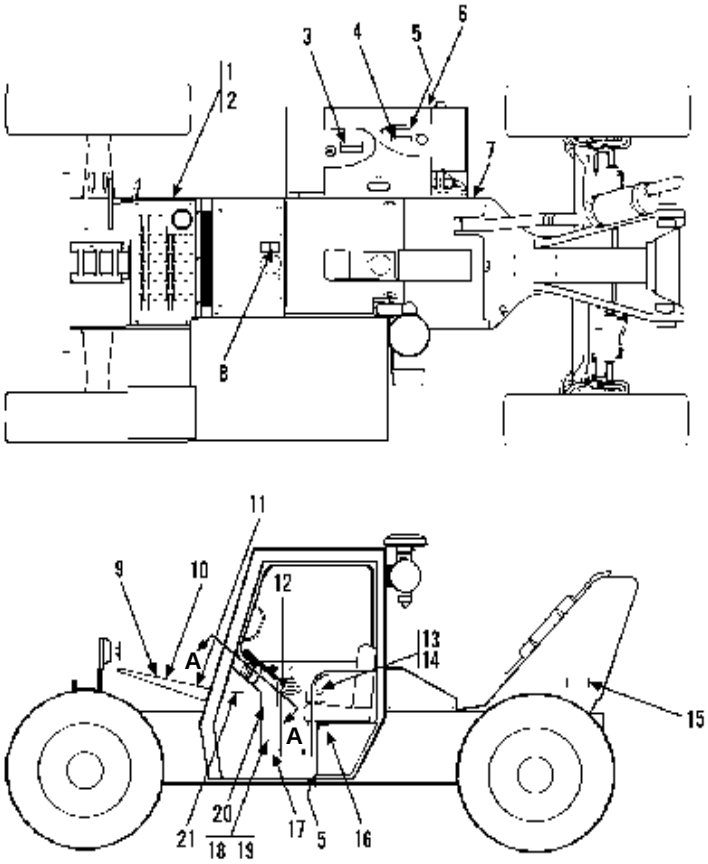

NOTE: USE 1440-4645 BOESHIELD PROTECTANT (12 OZ. SPRAY) ON ANY EXPOSED METAL

Item	Part No.	Qty.	Description Of Part
	9108-4283	1	COMMON DECAL KIT - WHITE (includes all items except 11, 18 & 19, on page 12-2, and all standard items on page 12-3, except items 8 thru 11, 13, 14, 15 & 17)
1	9108-3494	1	BATTERY WARNING
2	9108-3497	1	JUMP START WARNING
3	9108-3510	1	FUEL WARNING PLATE
4	9108-3509	1	HYDRAULIC OIL PLATE
5	9108-3492	2	OIL WARNING DECAL
6	9103-3011	1	WARNING DECAL (located on side of tank cover)
7	7734-3018	1	WARNING DECAL (located on side of rear cover weldment)
8	9104-3210	1	COOLING SYS. CAUTION DECAL
9	8360-1011	1	ACCIDENT PREVENTION DECAL
10	9104-3215	1	LIFTING PERSONNEL DECAL
11	9132-3001	1	SERVICE INSTRUCTION DECAL
12	9130-3047	1	BOOM OPERATION DECAL
13	9108-3317	1	TILT DECAL
14	9108-3318	1	SWAY DECAL

Item	Part No.	Qty.	Description Of Part
15	9104-3209	2	PINCH POINT DECAL
16	7733-3027	1	MADE IN USA DECAL
17	9100-3030	1	PATENT DECAL
18	9112-3110	1	SERIAL NUMBER & ATTACHMENT PLATE
19	8834-1022	4	DRIVE SCREW
20	9106-3047	1	WARNING DECAL
21	9104-3211	1	RIDERS WARNING DECAL
22	9114-3120	1	INSTRUMENT PANEL DECAL
23	9114-3182	1	PARK BRAKE DECAL
24	9108-3314	1	TRACTION DECAL
25	9108-3428	1	FORWARD - REVERSE DECAL (supplied with reversing master switch)
26	9112-3117	1	CAPACITY CHART
27	7702-3007	1	BATTERY INSTRUCTION DECAL, (not shown)
28	8364-1675	1	GRADALL DECAL (not shown)
29	9108-3324	1	SERVICE DECAL (not shown, this decal does not apply, order 9132-3001 534C-6T service decal)

**Revised serial number due to addition of new design.*

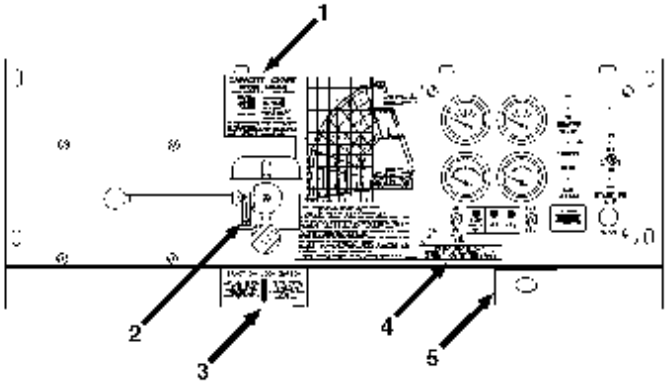

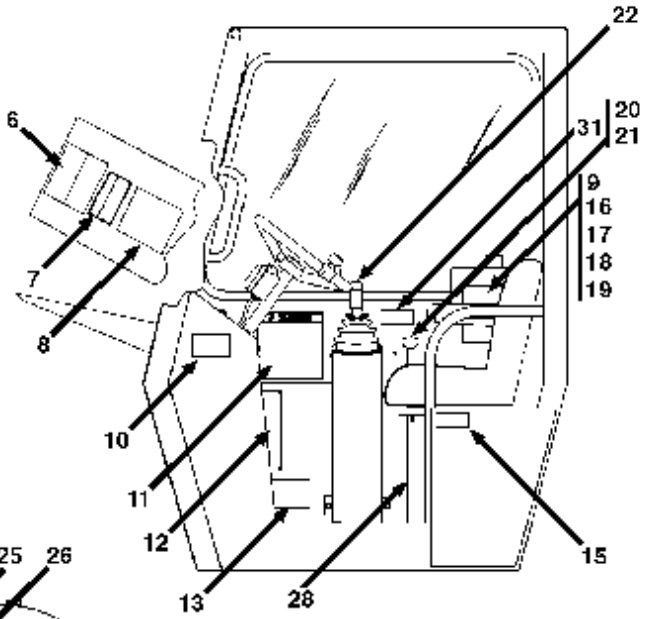

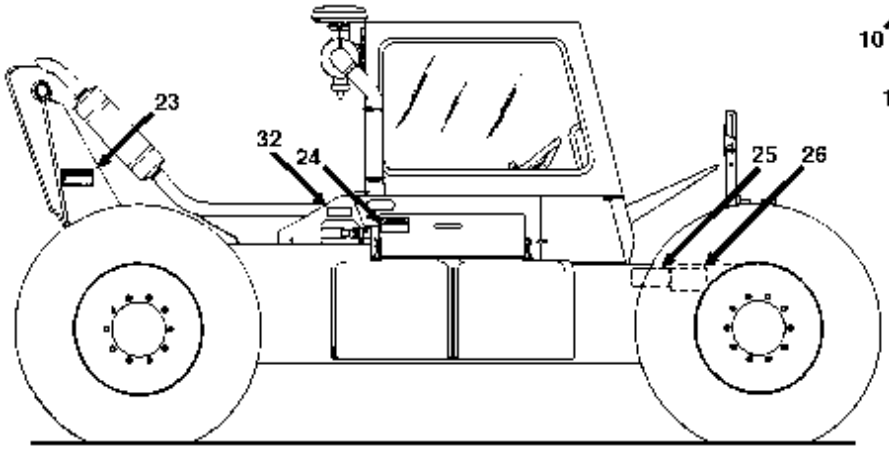

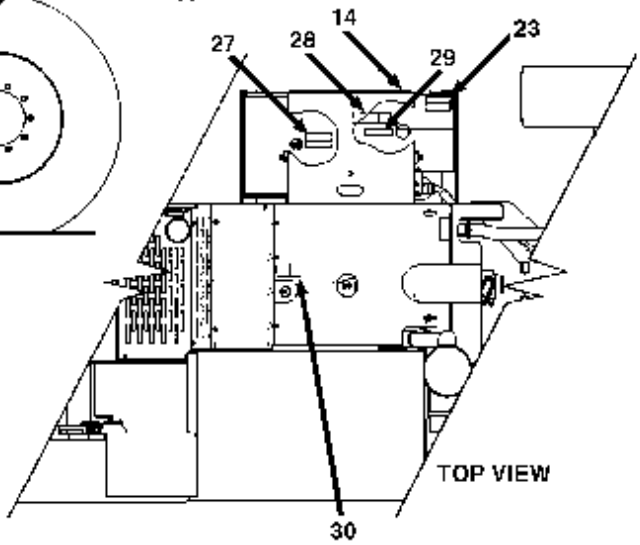

NOTE! ITEM 8, SERVICE INSTRUCTION DECAL IS NEW. ALL MACHINES AFTER S/N 0388247 MUST USE 9108-3539 SERVICE INSTRUCTIONS TO PREVENT DAMAGE TO THEIR MACHINES.

Item	Part No.	Qty.	Description Of Part
	9108-4283	1	522 & 534C COMMON DECAL KIT (includes all items except 13 thru 16 on page 12-3 & all items except 8, 9, 12, & 16 thru 19 on page 12-2)
1	9112-3117	1	CAPACITY CHART (534C-6)
	9113-3005	1	CAPACITY CHART (532C-6)
2	9108-3428	1	FWD/REV DECAL
3	9108-3314	1	TRACTION DECAL (534C-6)
4	9114-3182	1	PARK BRAKE DECAL
5	9114-3120	1	INSTRUMENT PANEL DECAL
6	8360-1011	1	ACCIDENT PREVENTION DECAL
7	9104-3215	1	LIFTING PERSONNEL DECAL
8	**9108-3539**	**1**	**SERVICE INSTRUCTION DECAL**
9	9112-4051	1	PARTS MANUAL
10	9104-3211	1	RIDERS WARNING DECAL
11	9106-3047	1	WARNING DECAL
12	9112-3153	1	S/N & ATTACH PLATE (534C-6)
	9113-3006	1	S/N & ATTACH PLATE (532C-6)
13	9100-3030	1	PATENT DECAL
14	9116-3130	1	OIL LEVEL DECAL (align full mark with black line on sight gage)
15	7733-3027	1	MADE IN USA DECAL
16	9103-3102	1	MANUAL HOLDER

1440-4645 BOESHIELD METAL PROTECTANT, 12 OZ. SPRAY CAN
1440-4646 BOESHIELD METAL PROTECTANT, 1 GAL. CAN

Item	Part No.	Qty.	Description Of Part
17	9103-4001	1	SAFETY MANUAL
18	9103-1268	1	SAFETY MANUAL
19	2460-4126	1	OPERATOR MANUAL
20	9108-3318	1	SWAY DECAL
21	9108-3317	1	TILT DECAL
22	9130-3047	1	BOOM OPERATION DECAL
23	9104-3209	3	PINCH POINT DECAL
24	9103-3011	1	WARNING DECAL
25	9108-3494	1	BATTERY WARNING
26	9108-3497	1	JUMP START WARNING
27	9108-3510	1	FUEL WARNING PLATE
28	9108-3492	2	OIL WARNING DECAL (locate (1) on valve access plate)
29	9114-3288	1	HYDRAULIC OIL PLATE
30	9104-3210	1	COOLING SYSTEM CAUTION DECAL

**Revised serial number due to addition of new design.*

NOTE! ITEM 11, SERVICE INSTRUCTION DECAL IS NEW. ALL MACHINES AFTER S/N 0388247 MUST USE 9132-3020 SERVICE INSTRUCTIONS TO PREVENT DAMAGE TO THEIR MACHINES.

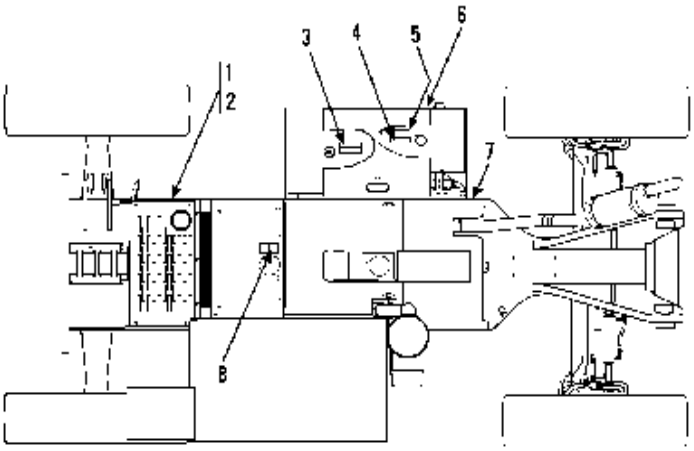

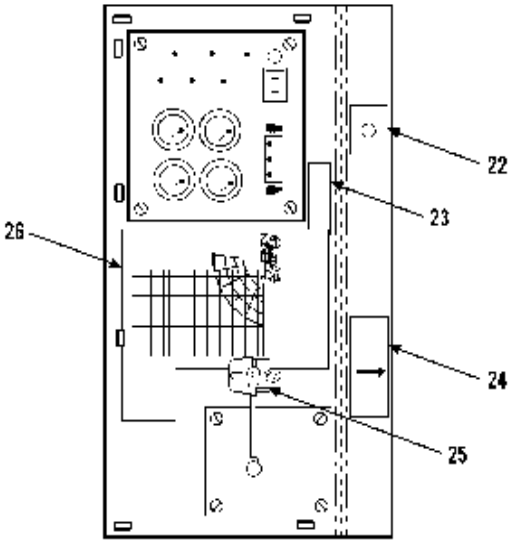

VIEW A-A

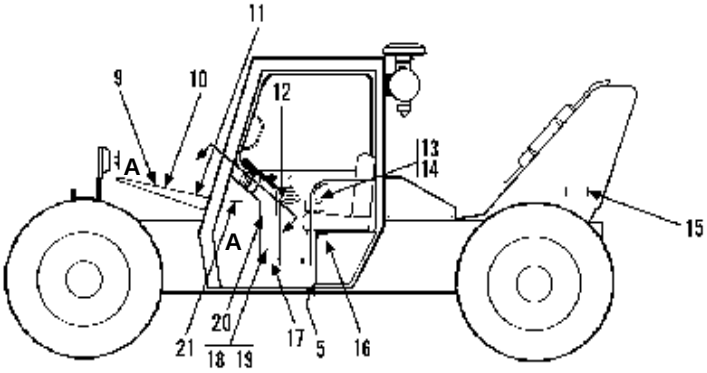

NOTE: USE 1440-4645 BOESHIELD PROTECTANT (12 OZ. SPRAY) ON ANY EXPOSED METAL
1440-4646 BOESHIELD PROTECTANT (1 GAL. CAN)

Item	Part No.	Qty.	Description Of Part
	9108-4283	1	COMMON DECAL KIT - WHITE (includes all items except 11, 18 & 19, on page 12-2, and all standard items on page 12-3, except items 8 thru 11, 13, 14, 15 & 17)
1	9108-3494	1	BATTERY WARNING
2	9108-3497	1	JUMP START WARNING
3	9108-3510	1	FUEL WARNING PLATE
4	9114-3288	1	HYDRAULIC OIL PLATE
5	9108-3492	2	OIL WARNING DECAL
6	9103-3011	1	WARNING DECAL (located on side of tank cover)
7	7734-3018	1	WARNING DECAL (located on side of rear cover weldment)
8	9104-3210	1	COOLING SYS. CAUTION DECAL
9	8360-1011	1	ACCIDENT PREVENTION DECAL
10	9104-3215	1	LIFTING PERSONNEL DECAL
11	**9132-3020**	**1**	**SERVICE INSTRUCTION DECAL**
12	9130-3047	1	BOOM OPERATION DECAL
13	9108-3317	1	TILT DECAL

Item	Part No.	Qty.	Description Of Part
14	9108-3318	1	SWAY DECAL
15	9104-3209	3	PINCH POINT DECAL
16	7733-3027	1	MADE IN USA DECAL
17	9100-3030	1	PATENT DECAL
18	9112-3153	1	SERIAL NUMBER & ATTACHMENT PLATE
19	8834-1022	4	DRIVE SCREW
20	9106-3047	1	WARNING DECAL
21	9104-3211	1	RIDERS WARNING DECAL
22	9114-3120	1	INSTRUMENT PANEL DECAL
23	9114-3182	1	PARK BRAKE DECAL
24	9108-3314	1	TRACTION DECAL
25	9108-3428	1	FORWARD - REVERSE DECAL (supplied with reversing master switch)
26	9112-3117	1	CAPACITY CHART
27	7702-3007	1	BATTERY INSTRUCTION DECAL, (not shown)
*28	9114-3292	1	DIPSTICK DECAL
	8364-1675	1	GRADALL DECAL (not shown)

**Revised serial number due to addition of new design.*

MISCELLANEOUS
Cab & Frame Decals
Starting Serial No. 0488238
Original Issue 2-98

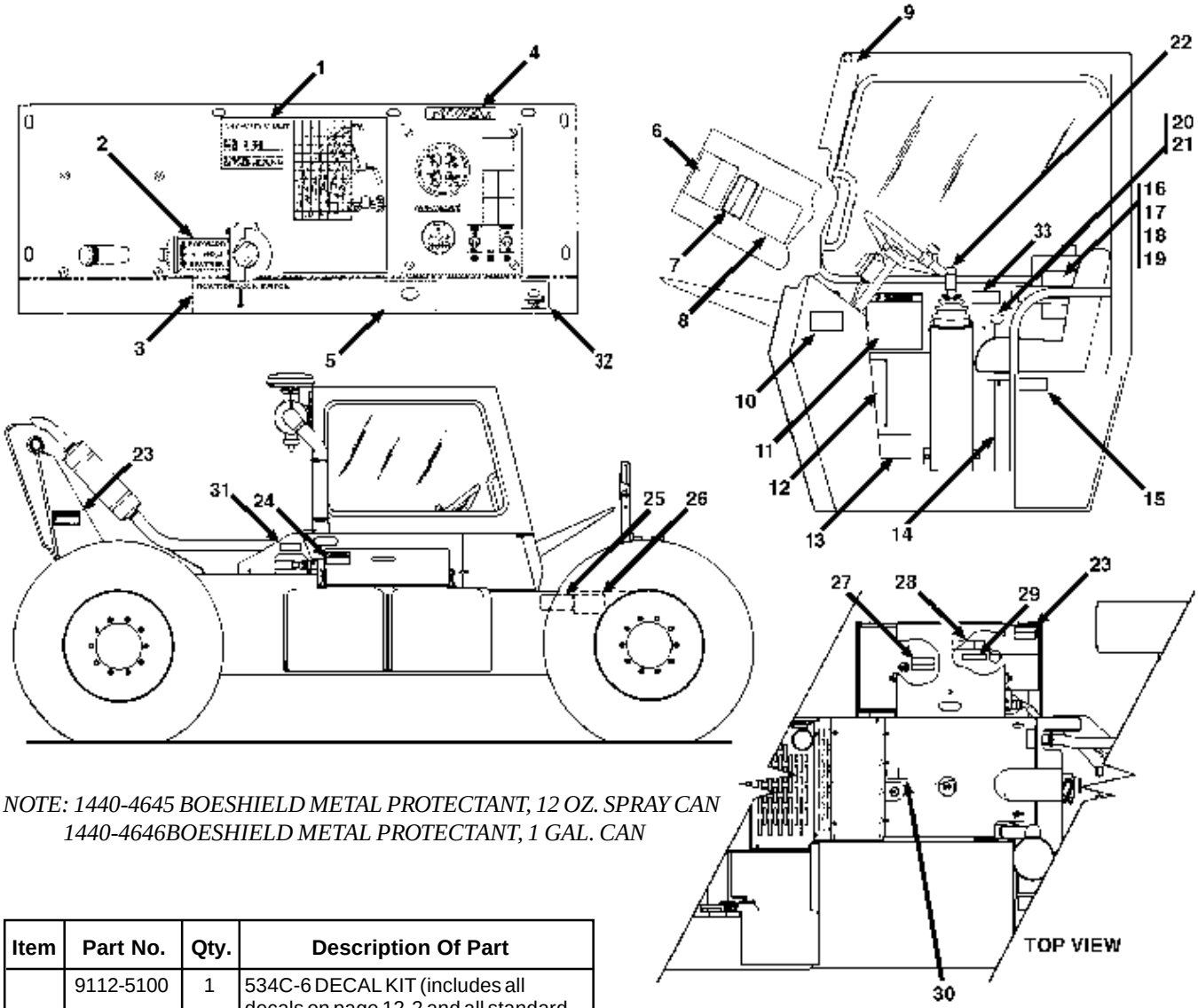

NOTE: 1440-4645 BOESHIELD METAL PROTECTANT, 12 OZ. SPRAY CAN
1440-4646BOESHIELD METAL PROTECTANT, 1 GAL. CAN

Item	Part No.	Qty.	Description Of Part
	9112-5100	1	534C-6 DECAL KIT (includes all decals on page 12-2 and all standard decals on page 12-3)
1	9112-3117	1	CAPACITY CHART
2	9116-3028	1	SHIFTER DECAL
3	9108-3314	1	TRACTION DECAL
4	9114-3182	1	PARK BRAKE DECAL
5	9114-3120	1	INSTRUMENT PANEL DECAL
6	8060-3022	1	ACCIDENT PREVENTION DECAL
7	9134-3010	1	LIFTING PERSONNEL DECAL
8	9108-3539	1	SERVICE INSTRUCTION DECAL
9	9103-3320	1	TILT GAUGE
10	9114-3283	2	RIDERS WARNING DECAL
11	9114-3287	1	WARNING DECAL
12	9112-3153	1	SERIAL NO. & ATTACH PLATE
13	9100-3030	1	PATENT DECAL
14	9108-3492	2	OIL WARNING DECAL
15	7733-3027	1	MADE IN USA DECAL
16	9103-3102	1	MANUAL HOLDER
17	9103-4001	1	SAFETY MANUAL
18	9103-1268	1	SAFETY MANUAL
19	2460-4126	1	OPERATOR MANUAL
20	9108-3318	1	SWAY DECAL

Item	Part No.	Qty.	Description Of Part
21	9108-3317	1	TILT DECAL
22	9130-3047	1	BOOM OPERATION DECAL
23	9114-3282	5	PINCH POINT DECAL
24	9114-3281	1	WARNING DECAL
25	9114-3284	1	BATTERY WARNING
26	9114-3285	1	JUMP START WARNING
27	9114-3286	1	FUEL WARNING PLATE
28	9108-3492	1	OIL WARNING DECAL
29	9114-3288	1	HYDRAULIC OIL PLATE
30	8060-3026	1	COOLING SYSTEM CAUTION DECAL
31	9114-3280	1	WARNING DECAL
32	9103-3089	1	HORN DECAL
33	9114-3292	1	DIPSTICK DECAL
34	9116-3130	1	OIL WARNING DECAL (not shown)

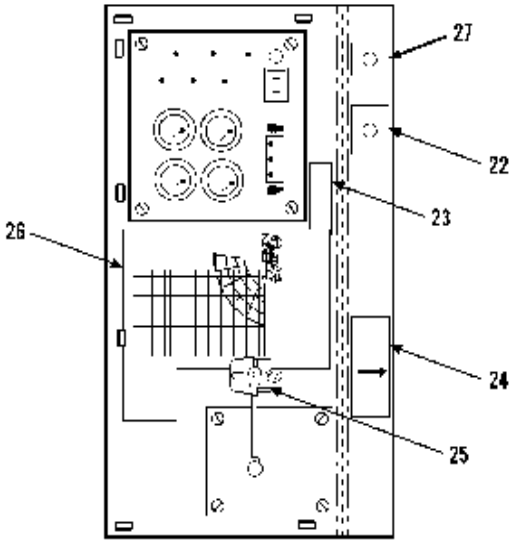

VIEW A-A

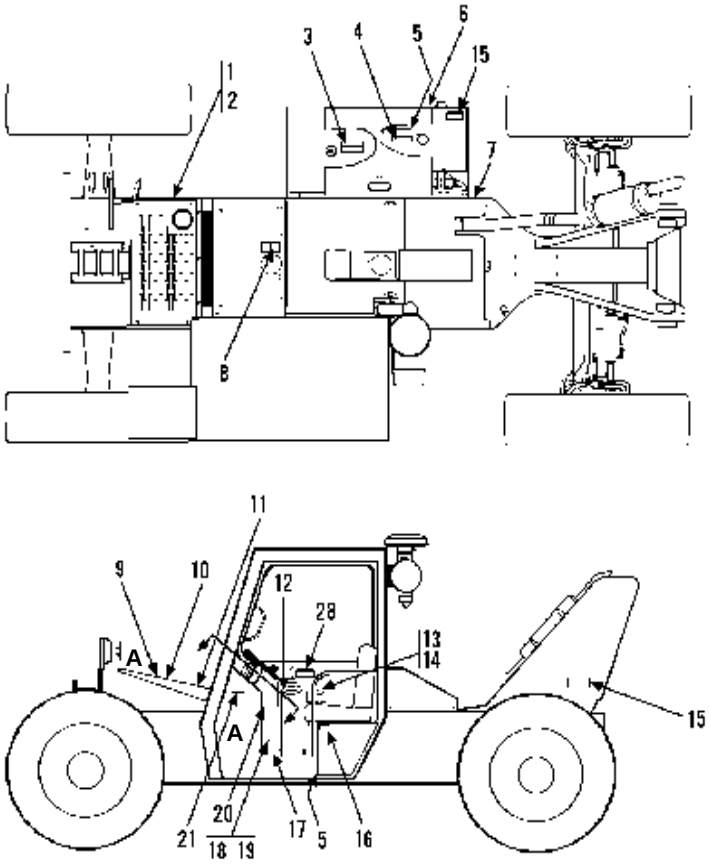

NOTE: USE 1440-4645 BOESHIELD PROTECTANT (12 OZ. SPRAY) ON ANY EXPOSED METAL
1440-4646 BOESHIELD PROTECTANT (1 GAL. CAN)

Item	Part No.	Qty.	Description Of Part
	9132-5033	1	534C-6T DECAL KIT - WHITE (includes all items except18 &19 on page 12-2, and all standard items on page 12-3, except items 8 thru 11, 13, 14, 15 & 17)
1	9114-3284	1	BATTERY WARNING
2	9114-3285	1	JUMP START WARNING
3	9114-3286	1	FUEL WARNING PLATE
4	9114-3288	1	HYDRAULIC OIL PLATE
5	9108-3492	2	OIL WARNING DECAL
6	9114-3281	1	WARNING DECAL (located on side of tank cover)
7	9114-3280	1	WARNING DECAL (located on side of rear cover weldment)
8	8060-3026	1	COOLING SYS. CAUTION DECAL
9	8060-3022	1	ACCIDENT PREVENTION DECAL
10	9134-3010	1	LIFTING PERSONNEL DECAL
11	9132-3020	1	SERVICE INSTRUCTION DECAL
12	9130-3047	1	BOOM OPERATION DECAL
13	9108-3317	1	TILT DECAL

Item	Part No.	Qty.	Description Of Part
14	9108-3318	1	SWAY DECAL
15	9114-3282	5	PINCH POINT DECAL
16	7733-3027	1	MADE IN USA DECAL
17	9100-3030	1	PATENT DECAL
18	9112-3153	1	SERIAL NUMBER & ATTACHMENT PLATE
19	8834-1022	4	DRIVE SCREW
20	9114-3287	1	WARNING DECAL
21	9114-3283	1	RIDERS WARNING DECAL
22	9114-3120	1	INSTRUMENT PANEL DECAL
23	9114-3182	1	PARK BRAKE DECAL
24	9108-3314	1	TRACTION DECAL
25	9116-3028	1	SHIFTER DECAL
26	9112-3117	1	CAPACITY CHART
27	9103-3089	1	HORN DECAL
28	9114-3292	1	DIPSTICK DECAL
29	9116-3256	1	INSTRUCTION DECAL (located on engine, not shown)
30	9116-3130	1	OIL LEVEL DECAL (not shown)

MISCELLANEOUS
Boom Decals
Starting Serial No. 0188002 thru 0488237
Original Issue 1-90
Revised 2-5-98

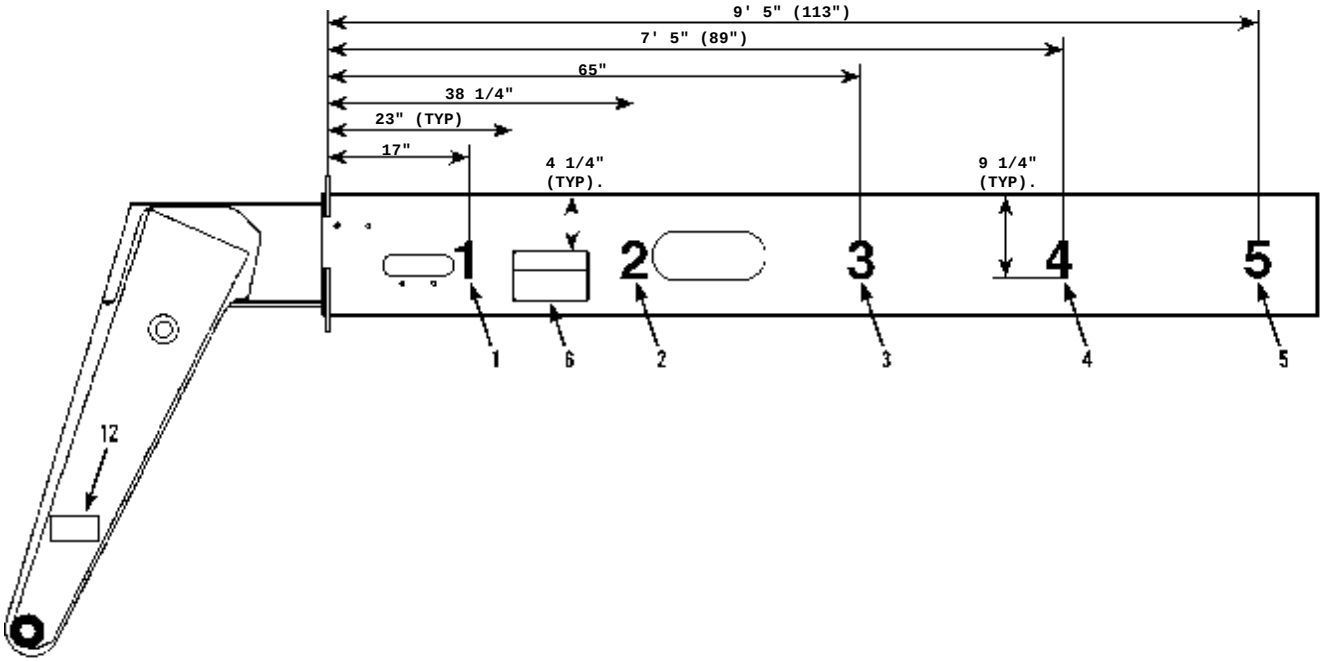

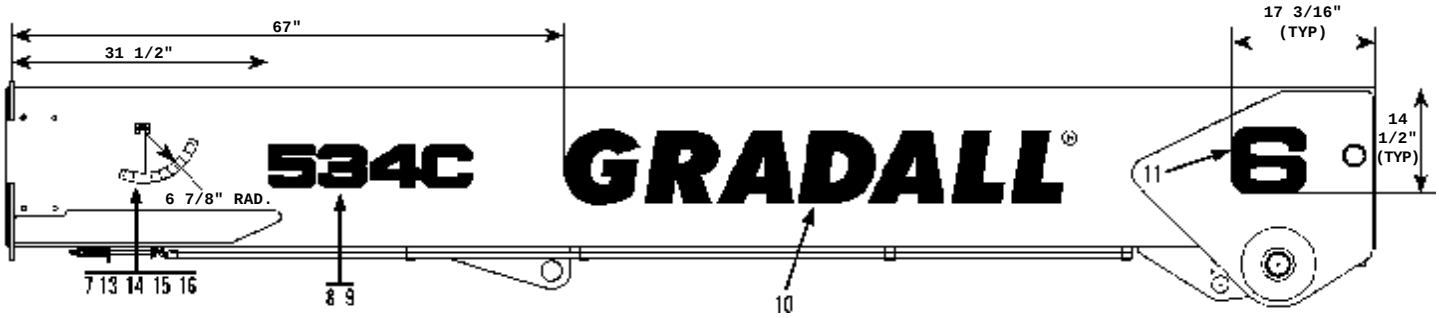

Item	Part No.	Qty.	Description Of Part
	9108-4283	1	522 & 34C COMMON DECAL KIT (includes all items on page 12-2 except items 11, 13, 18 & 26 thru 29. Also includes all items except items 8, 9, 11 & items 13 thru 16 on page 12-3)
1	9100-3016	1	"1" DECAL, STANDARD (white)
	9104-3134	1	"1" DECAL, OPTIONAL (black)
2	9100-3018	1	"2" DECAL, STANDARD (white)
	9104-3135	1	"2" DECAL, OPTIONAL (black)
3	9112-3042	1	"3" DECAL, STANDARD (white)
	9112-3043	1	"3" DECAL, OPTIONAL (black)
4	9100-3020	1	"4" DECAL, STANDARD (white)
	9104-3136	1	"4" DECAL, OPTIONAL (black)
5	9112-3044	1	"5" DECAL, STANDARD (white)
	9112-3045	1	"5" DECAL, OPTIONAL (black)

Item	Part No.	Qty.	Description Of Part
6	7702-3009	2	HOLE WARNING DECAL
7	9100-3031	1	BOOM ANGLE DECAL (white)
8	9112-3035	2	534C DECAL, STANDARD (white)
	9112-3036	2	534C DECAL, OPTIONAL (black)
9	9113-3001	2	532C DECAL, STANDARD (white)
	9113-3002	2	532C DECAL, OPTIONAL (black)
10	9112-3037	2	GRADALL DECAL, STANDARD (white)
	9112-3038	2	GRADALL DECAL, OPTIONAL (black)
11	9103-3018	2	"6" DECAL, STANDARD (white)
	9103-3218	2	"6" DECAL, OPTIONAL (black)
12	9103-3023	1	QUICK SWITCH DECAL
13	9020-0445	1	PENDULUM
14	9020-0688	1	BEARING
15	9002-6491	1	SHOULDER BOLT, 1/4-20
16	8856-1108	1	FLAT WASHER, 5/16

**Revised serial number due to addition of new design.*

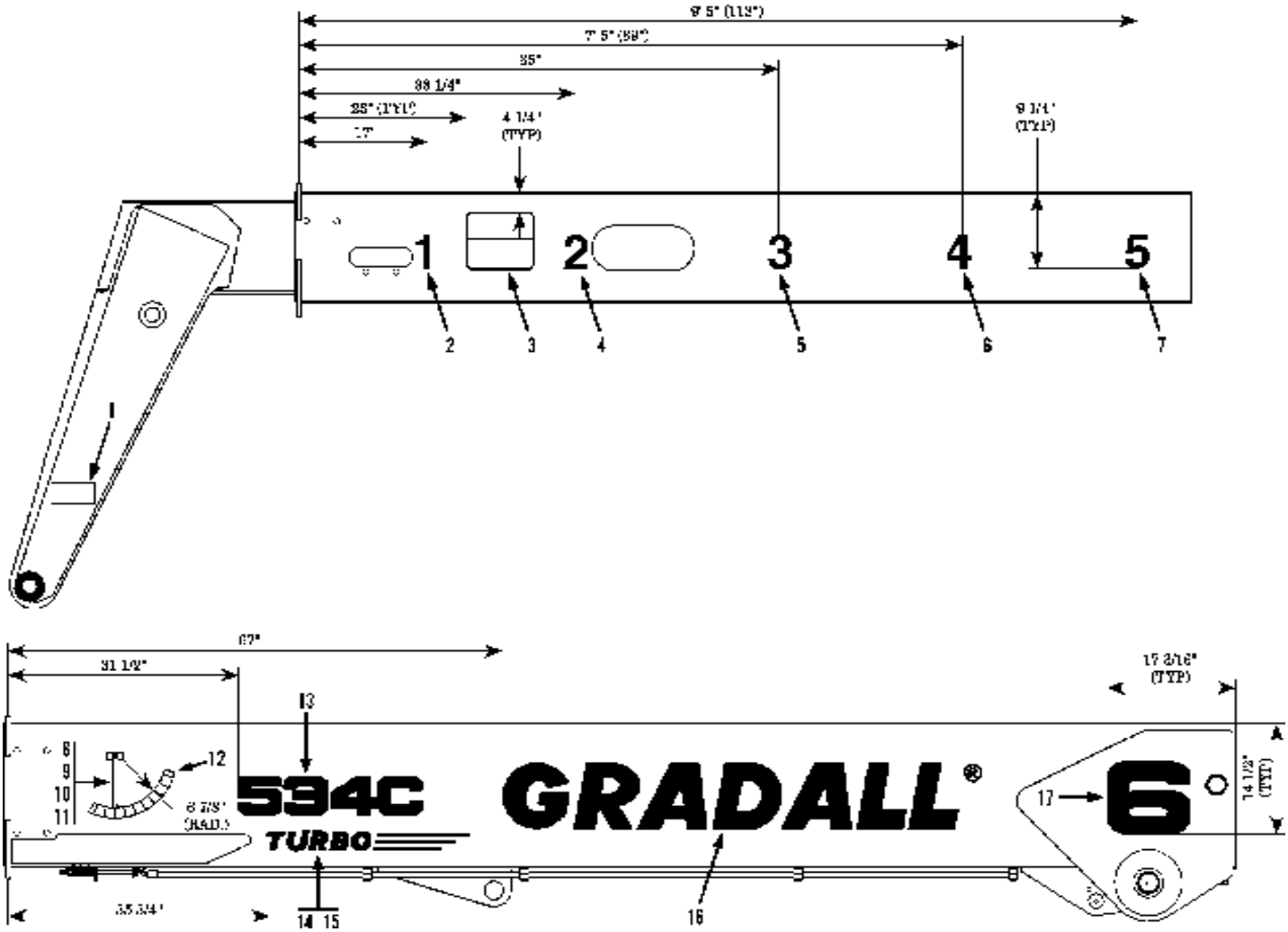

NOTE: USE 1440-4645 BOESHIELD PROTECTANT (12 OZ. SPRAY) ON ANY EXPOSED METAL

Item	Part No.	Qty.	Description Of Part
	9108-4283	1	COMMON DECAL KIT - WHITE (includes all items except 11, 18 & 19, on page 12-2, and all standard items on page 12-3, except items 8 thru 11, 13, 14, 15 & 17)
1	9103-3023	1	QUICK SWITCH DECAL
2	9100-3016	1	"1" DECAL, WHITE (standard)
	9104-3134	1	"1" DECAL, BLACK (optional)
3	7702-3009	2	HOLE WARNING DECAL
4	9100-3018	1	"2" DECAL, WHITE (standard)
	9104-3135	1	"2" DECAL, BLACK (optional)
5	9112-3042	1	"3" DECAL, WHITE (standard)
	9112-3043	1	"3" DECAL, BLACK (optional)
6	9100-3020	1	"4" DECAL, WHITE (standard)
	9104-3136	1	"4" DECAL, BLACK (optional)
7	9112-3044	1	"5" DECAL, WHITE (standard)
	9112-3045	1	"5" DECAL, BLACK (optional)
8	9020-0445	1	PENDULUM
9	9020-0688	1	BEARING
10	9002-6491	1	SHOULDER BOLT, 1/4-20
11	8856-1108	1	WASHER, 5/16
12	9100-3031	1	BOOM ANGLE DECAL, WHITE , (standard)
13	9112-3035	2	"534C" DECAL, WHITE (standard)
	9112-3036	2	"534C" DECAL, BLACK (optional)
14	9132-3002	1	L.H. TURBO DECAL, WHITE, (standard)
	9132-3004	1	L.H. TURBO DECAL, BLACK, (optional)
15	9132-3003	1	R.H. TURBO DECAL, WHITE, (standard)
	9132-3005	1	R.H. TURBO DECAL, BLACK, (optional)
16	9112-3037	2	GRADALL DECAL, WHITE (standard)
	9112-3038	2	GRADALL DECAL, BLACK (optional)
17	9103-3018	2	"6" DECAL, WHITE (standard)
	9103-3218	2	"6" DECAL, BLACK (optional)

**Revised serial number due to addition of new design.*

MISCELLANEOUS
Boom Decals
Starting Serial No. 0488238
Original Issue 2-98

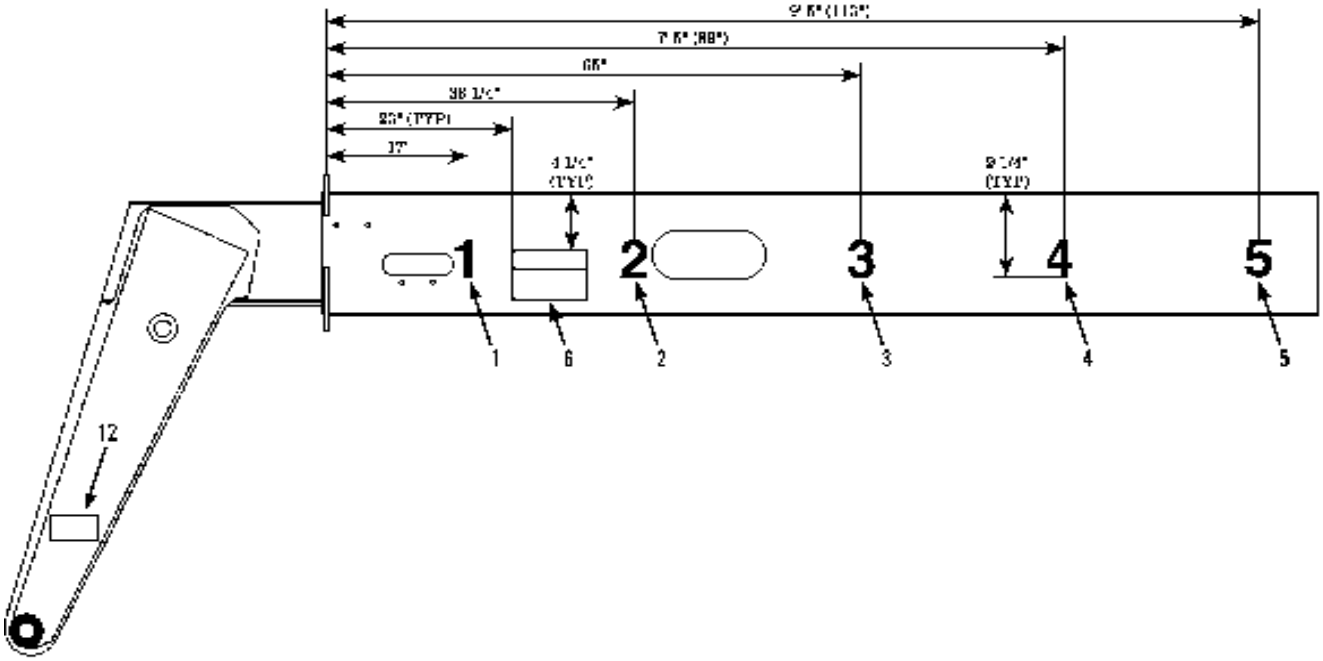

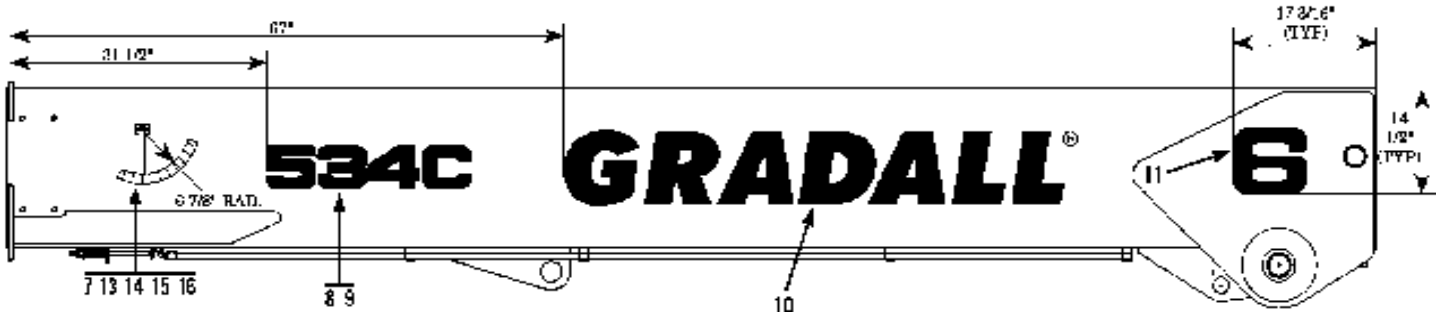

Item	Part No.	Qty.	Description Of Part
1	9100-3016	1	"1" DECAL, STANDARD (white)
	9104-3134	1	"1" DECAL, OPTIONAL (black)
2	9100-3018	1	"2" DECAL, STANDARD (white)
	9104-3135	1	"2" DECAL, OPTIONAL (black)
3	9112-3042	1	"3" DECAL, STANDARD (white)
	9112-3043	1	"3" DECAL, OPTIONAL (black)
4	9100-3020	1	"4" DECAL, STANDARD (white)
	9104-3136	1	"4" DECAL, OPTIONAL (black)
5	9112-3044	1	"5" DECAL, STANDARD (white)
	9112-3045	1	"5" DECAL, OPTIONAL (black)
6	8060-3019	2	HOLE WARNING DECAL
7	9100-3031	1	BOOM ANGLE DECAL (white)

Item	Part No.	Qty.	Description Of Part
8	9112-3035	2	534C DECAL, STANDARD (white)
	9112-3036	2	534C DECAL, OPTIONAL (black)
10	9112-3037	2	GRADALL DECAL, STANDARD (white)
	9112-3038	2	GRADALL DECAL, OPTIONAL (black)
11	9103-3018	2	"6" DECAL, STANDARD (white)
	9103-3218	2	"6" DECAL, OPTIONAL (black)
12	9114-3290	1	QUICK SWITCH DECAL
13	9020-0445	1	PENDULUM
14	9020-0688	1	BEARING
15	9002-6491	1	SHOULDER BOLT, 1/4-20
16	8856-1108	1	FLAT WASHER, 5/16

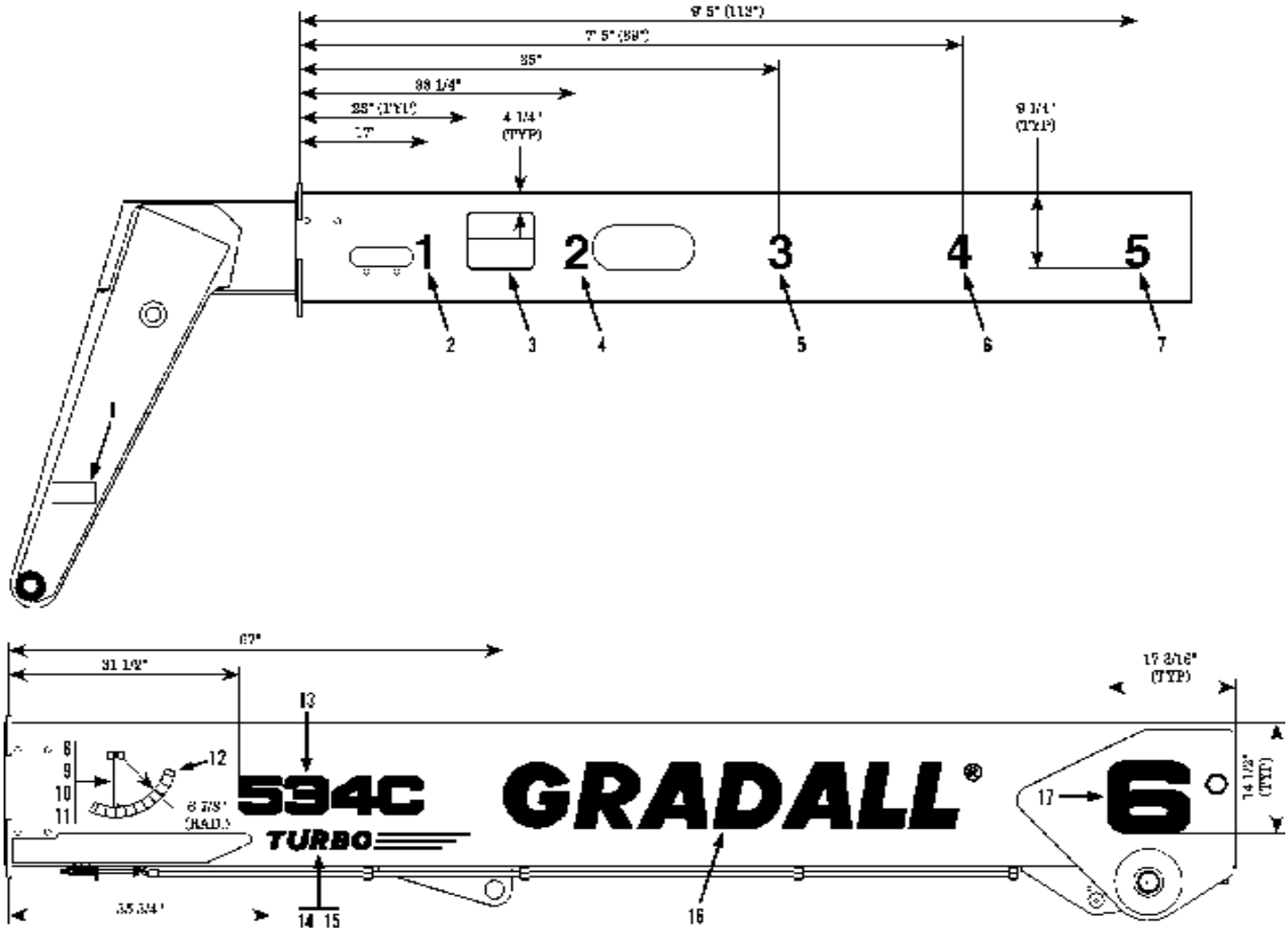

NOTE: USE 1440-4645 BOESHIELD PROTECTANT (12 OZ. SPRAY) ON ANY EXPOSED METAL

Item	Part No.	Qty.	Description Of Part
	9108-4283	1	COMMON DECAL KIT - WHITE (includes all items except 11, 18 & 19, on page 12-2, and all standard items on page 12-3, except items 8 thru 11, 13, 14, 15 & 17)
1	9114-3290	1	QUICK SWITCH DECAL
2	9100-3016	1	"1" DECAL, WHITE (standard)
	9104-3134	1	"1" DECAL, BLACK (optional)
3	8060-3019	2	HOLE WARNING DECAL
4	9100-3018	1	"2" DECAL, WHITE (standard)
	9104-3135	1	"2" DECAL, BLACK (optional)
5	9112-3042	1	"3" DECAL, WHITE (standard)
	9112-3043	1	"3" DECAL, BLACK (optional)
6	9100-3020	1	"4" DECAL, WHITE (standard)
	9104-3136	1	"4" DECAL, BLACK (optional)
7	9112-3044	1	"5" DECAL, WHITE (standard)
	9112-3045	1	"5" DECAL, BLACK (optional)
8	9020-0445	1	PENDULUM
9	9020-0688	1	BEARING
10	9002-6491	1	SHOULDER BOLT, 1/4-20
11	8856-1108	1	WASHER, 5/16
12	9100-3031	1	BOOM ANGLE DECAL, WHITE , (standard)
13	9112-3035	2	"534C" DECAL, WHITE (standard)
	9112-3036	2	"534C" DECAL, BLACK (optional)
14	9132-3002	1	L.H. TURBO DECAL, WHITE, (standard)
	9132-3004	1	L.H. TURBO DECAL, BLACK, (optional)
15	9132-3003	1	R.H. TURBO DECAL, WHITE, (standard)
	9132-3005	1	R.H. TURBO DECAL, BLACK, (optional)
16	9112-3037	2	GRADALL DECAL, WHITE (standard)
	9112-3038	2	GRADALL DECAL, BLACK (optional)
17	9103-3018	2	"6" DECAL, WHITE (standard)
	9103-3218	2	"6" DECAL, BLACK (optional)

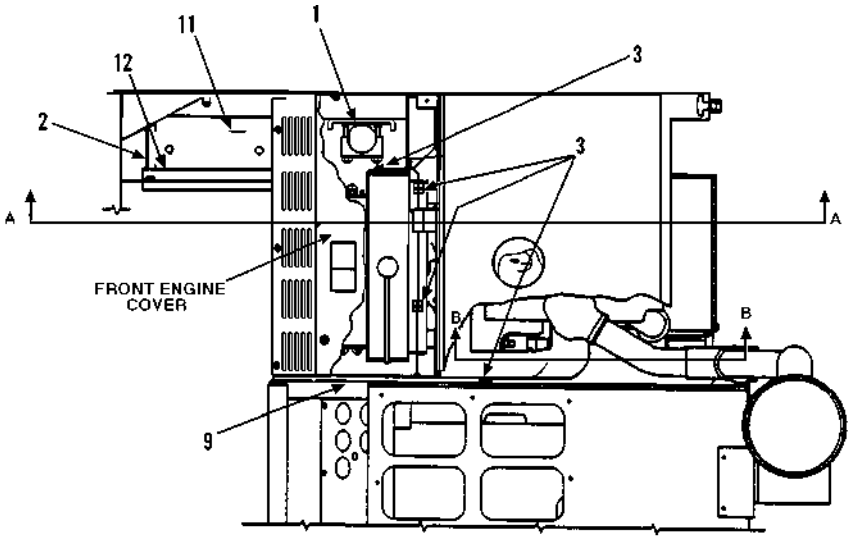

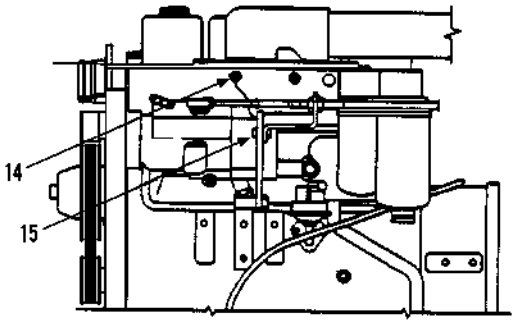

VIEW B-B

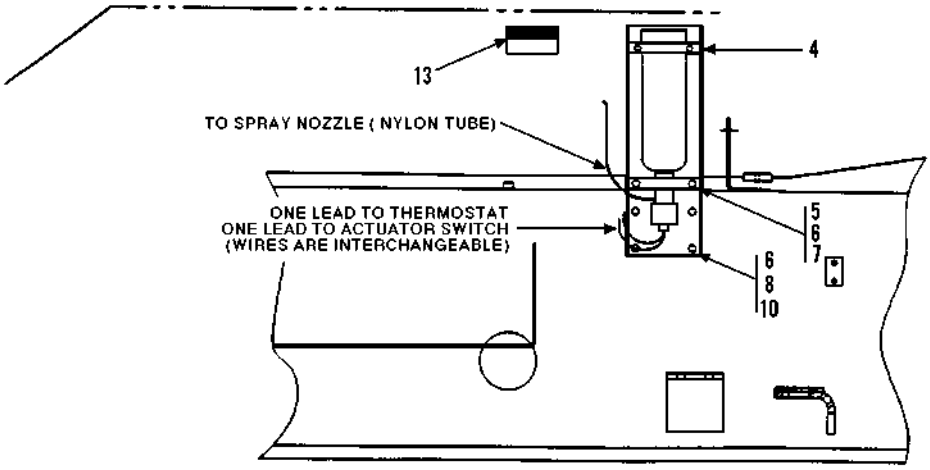

VIEW A-A

** Changed upper left to designate model more clearly. Changed part number & description on item 2.*

OPTIONAL EQUIPMENT
(9108-5054) Ether Starting Kit
Original Issue 3-90
Revised 10-11-95

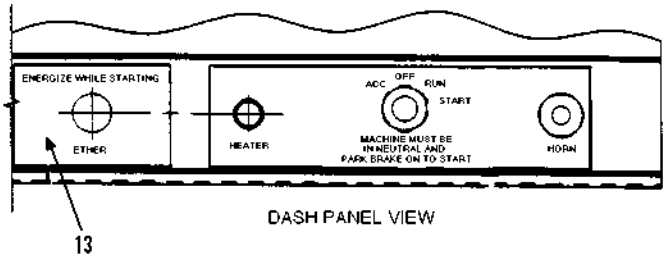

DASH PANEL VIEW

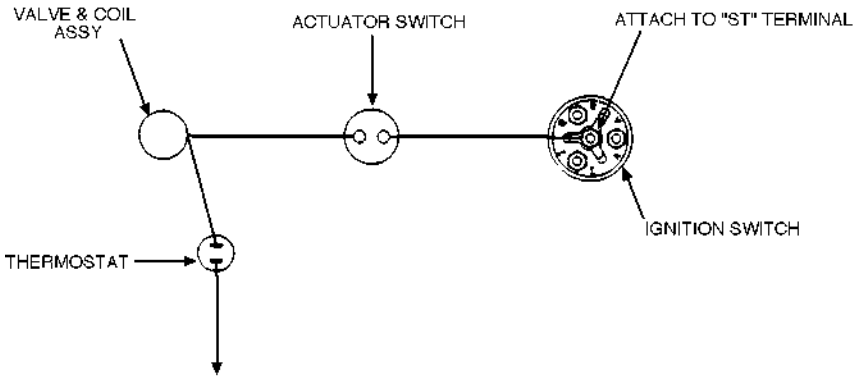

WIRING SCHEMATIC

Item	Part No.	Qty.	Description Of Part
	9108-5054	Ref	ETHER STARTING KIT (includes all items)
1	9108-3361	1	QUICK STARTING KIT
2	9108-1640	2	HOLD DOWN STUD
3	9002-7187	4	TY-RAP
4	9108-1601	1	MOUNTING BRACKET
5	8820-1005	2	HEX HD CAPSCREW, 1/4-20X1, GR5
6	8855-1009	6	LOCKWASHER, 1/4
7	8850-1004	2	HEX NUT, 1/4-20
8	8820-1002	4	HEX HD CAPSCREW, 1/4-20X5/8, GR5
9	7716-3117	1	RUBBER GROMMET
10	8856-1107	4	FLAT WASHER, 1/4
11		1	BATTERY (Purchase Locally)
12	9108-1517	1	BATTERY HOLD DOWN
13	9108-3363	1	ETHER DECAL
14	8698-3195	2	WIRE CONNECTOR
15	8698-3202	1	WIRE CONNECTOR

** Changed upper left to designate model more clearly. Changed part number & description on item 2.*

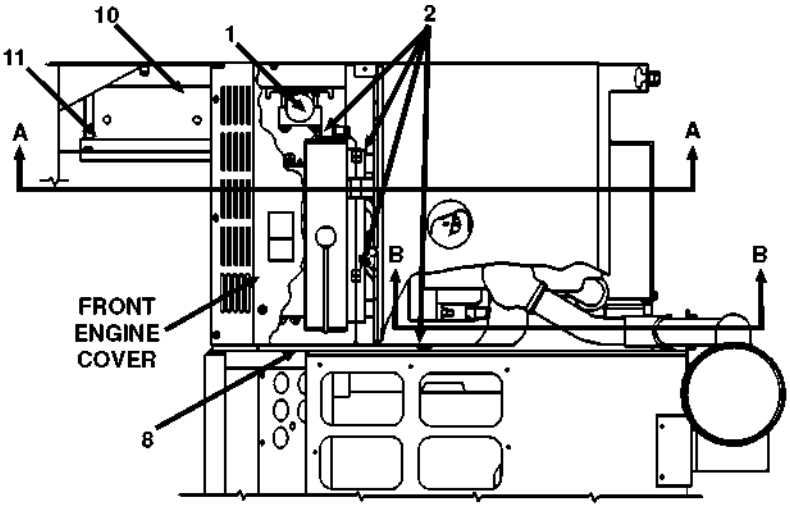

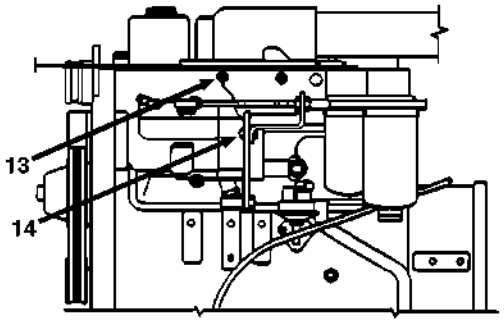

VIEW B-B

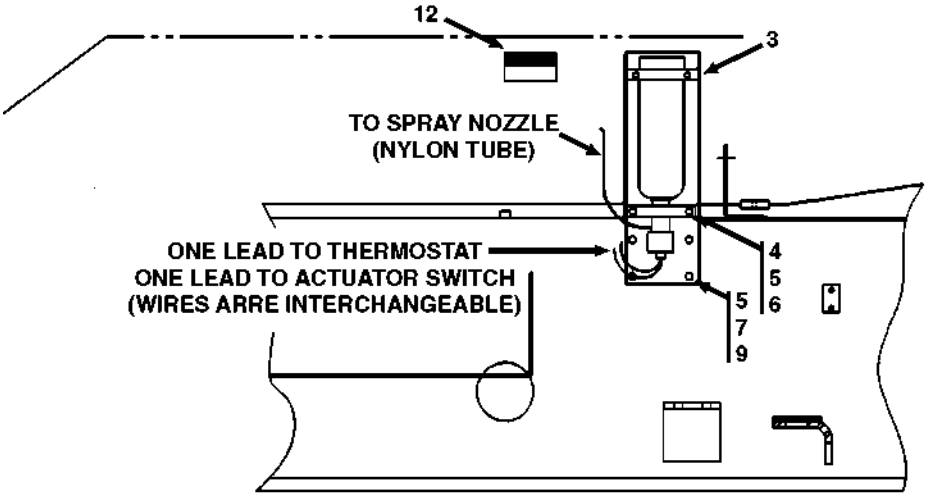

VIEW A-A

OPTIONAL EQUIPMENT
(9108-5105) Ether Starting Kit
Starting Serial No. 0288777
Original Issue 10-95

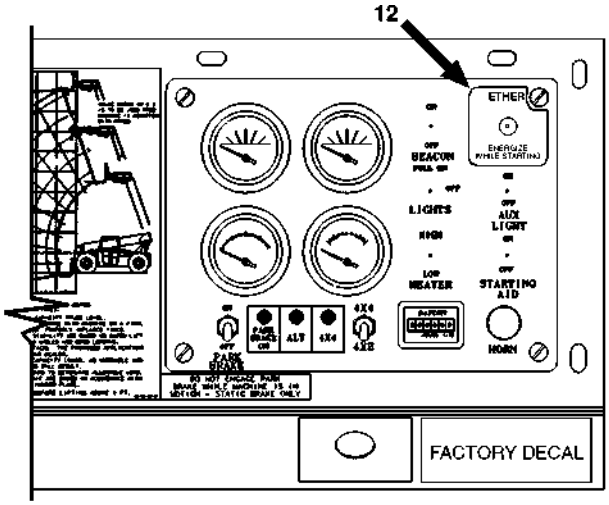

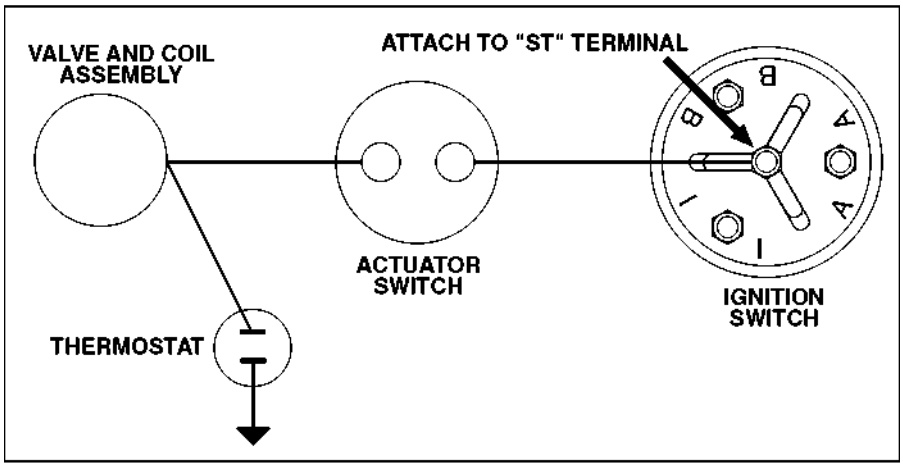

WIRING SCHEMATIC

Item	Part No.	Qty.	Description Of Part
	9108-5105	1	ETHER STARTING KIT (includes all items)
1	9108-3361	1	QUICK START KIT
2	9002-7187	4	TY-WRAP
3	9108-1601	1	MOUNTING BRACKET
4	8820-1005	2	HEX HD CAPSCREW, 1/4-20 x 1, GR5
5	8855-1009	6	LOCKWASHER, 1/4
6	8850-1004	2	HEX NUT, 1/4-20
7	8820-1002	4	HEX HD CAPSCREW, 1/4-20 x 5/8, GR5

Item	Part No.	Qty.	Description Of Part
8	7716-3117	1	RUBBER GROMMET
9	8856-1107	3	FLAT WASHER, 1/4
10		1	BATTERY (Purchase locally)
11	9108-1517	1	BATTERY HOLDDOWN
12	9108-3489	1	ETHER DECAL
13	8698-3195	2	WIRE CONNECTOR
14	8698-3202	1	WIRE CONNECTOR

OPTIONAL EQUIPMENT
(9132-5003) Ether Start - 534C-6 TURBO

Starting Serial No.0388043
Original Issue 8-95

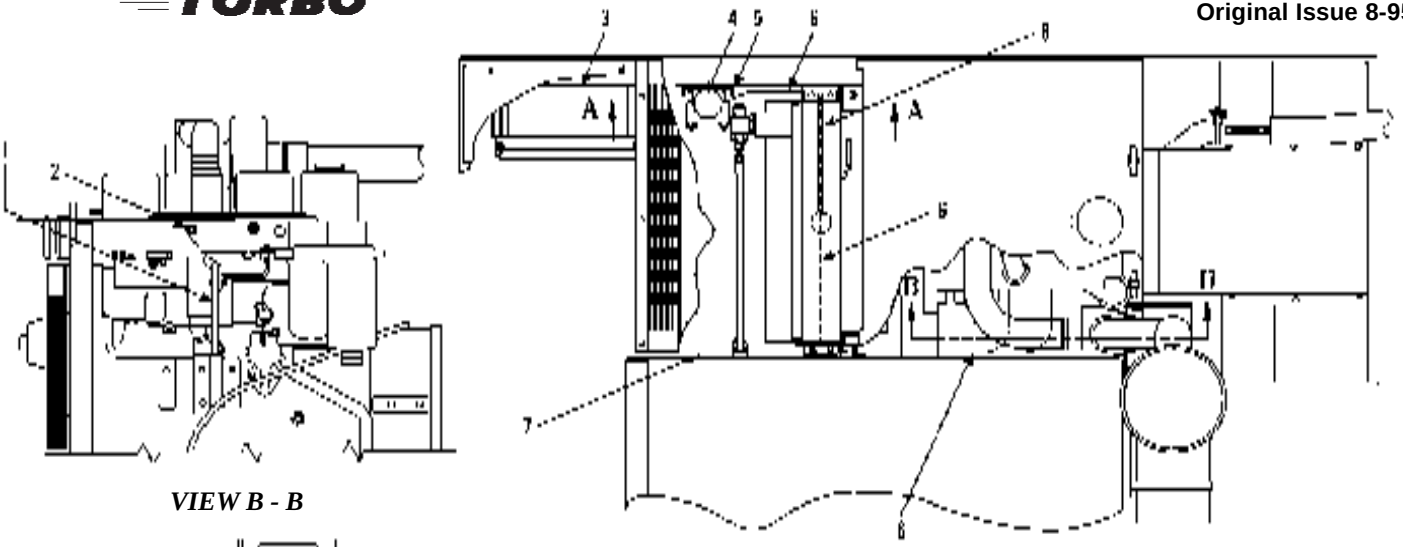

VIEW B - B

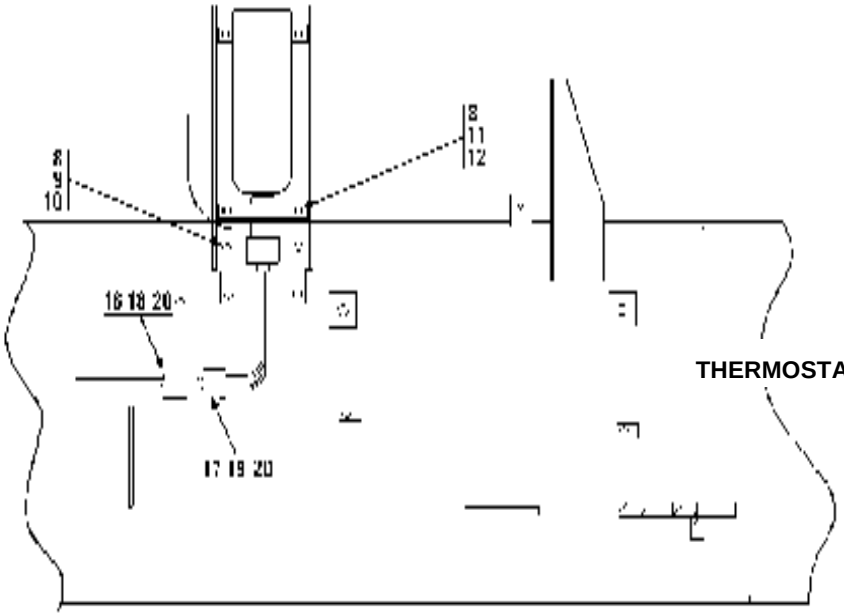

VIEW A - A

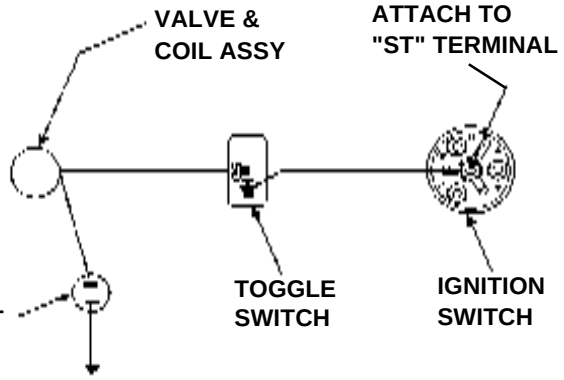

WIRING SCHEMATIC

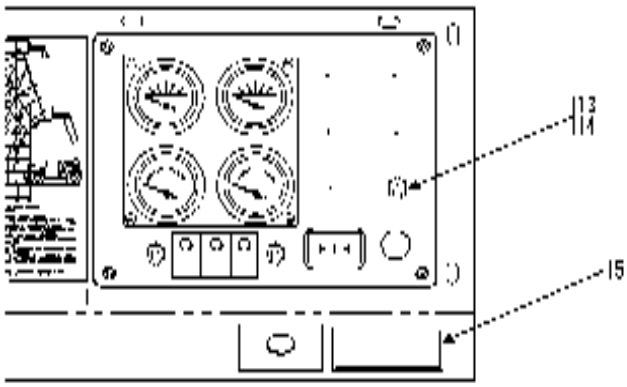

DASH PANEL VIEW

Item	Part No.	Qty.	Description Of Part
	9132-5003	Ref	ETHER START OPTION (includes all items)
1	8698-3202	1	WIRE CONNECTOR
2	8698-3195	2	WIRE CONNECTOR
3		1	BATTERY (1050 AMP) (purchase locally)
4	9108-3361	1	QUICK START KIT
5	9108-1601	1	MOUNTING BRACKET
6	9002-7187	4	TY-RAP
7	7716-3117	1	RUBBER GROMMET
8	8855-1009	6	LOCKWASHER, 1/4
9	8820-1002	4	HEX HD CAPSCREW, 1/4-20X5/8
10	8856-1107	4	WASHER, 1/4
11	8820-1005	2	HEX HD CAPSCREW, 1/4-20X1, GR5
12	8850-1004	2	HEX NUT, 1/4-20
13	9114-3163	1	TOGGLE SWITCH
14	7738-3470	1	BOOT
15	9114-3202	1	INSTRUCTION DECAL
16	8096-3058	1	SHROUD CONNECTOR, 2-WAY
17	8096-3057	1	TOWER CONNECTOR, 2-WAY
18	8096-3069	2	MAIL PIN TERMINAL
19	8096-3068	2	FEMALE PIN TERMINAL
20	8096-3065	2	CABLE SEAL

OPTIONAL EQUIPMENT
(9132-5034) Ether Start

Starting Serial No. 0488238
Original Issue 8-97

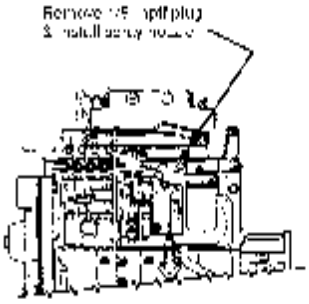

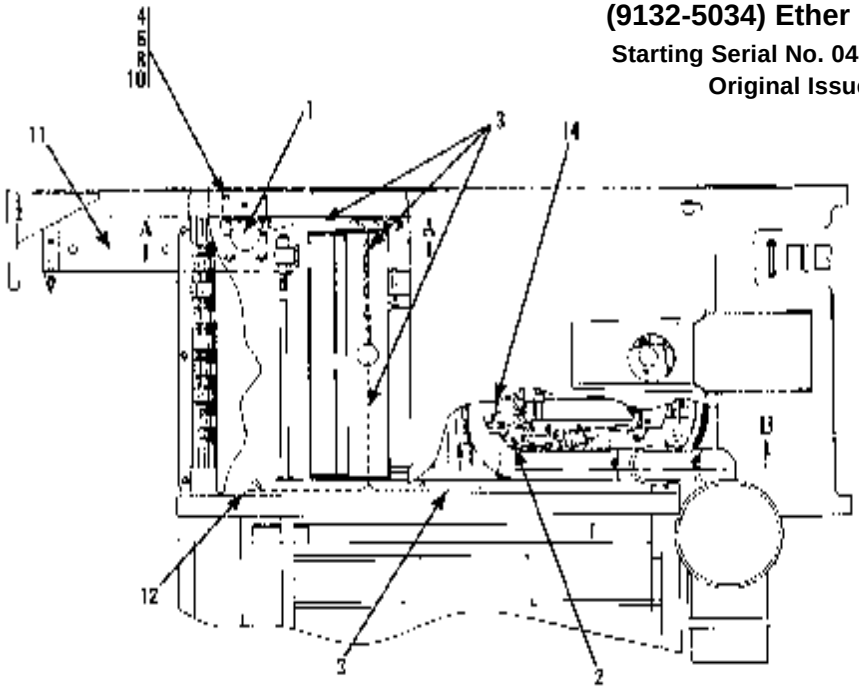

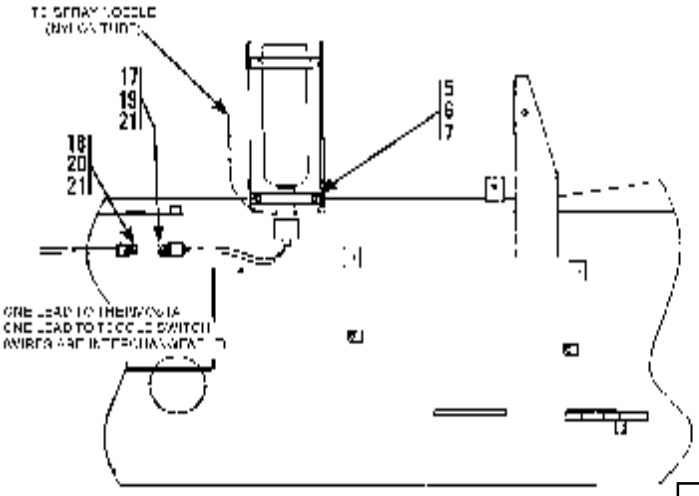

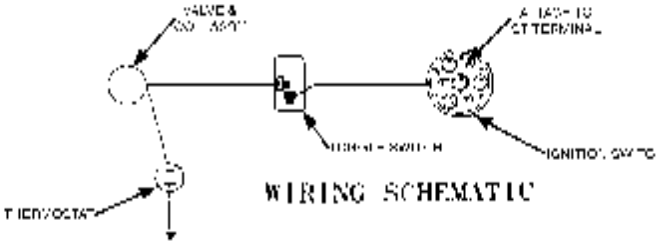

NOTE: ALL WIRE & NYLON TUBING NEEDED FOR INSTALLATION IS INCLUDED IN QUICK START KIT.

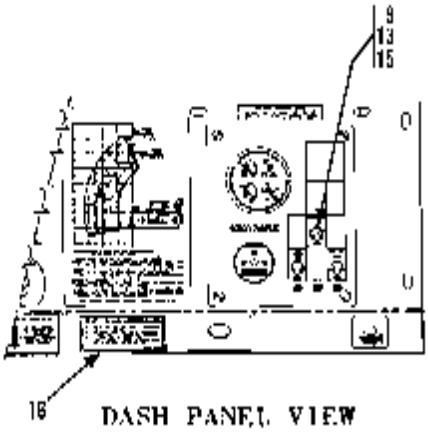

Item	Part No.	Qty.	Description Of Part
	9132-5034	Ref	ETHER START OPTION (includes all items)
1	9114-3362	1	QUICK START KIT
2	8698-3202	1	WIRE CONNECTOR
3	9002-7187	4	TY-RAP
4	9132-1017	1	MOUNTING BRACKET
5	8820-1005	2	HEX HD CAPSCREW 1/4-20X1, GR5
6	8855-1009	5	LOCKWASHER, 1/4
7	8850-1004	2	HEX NUT, 1/4-20
8	8820-1002	3	HEX HD CAPSCREW, 1/4-20X5/8, GR5
9	9112-3176	1	START AID DECAL
10	8856-1107	3	FLAT WASHER, 1/4
11		1	BATTERY (1050 amp) (purchase locally)
12	7716-3117	1	RUBBER GROMMET
13	7738-3467	1	TOGGLE SWITCH, SPST
14	8319-1038	1	HEX HD CAPSCREW, M10X1.5X20
15	7738-3470	1	BOOT
16	9114-3202	1	INSTRUCTION DECAL
17	8096-3058	1	2-WAY SHROUD CONNECTOR
18	8096-3057	1	2-WAY TOWER CONNECTOR
19	8096-3069	2	MALE PIN TERMINAL
20	8096-3068	2	FEMALE PIN TERMINAL
21	8096-3065	4	CABLE SEAL

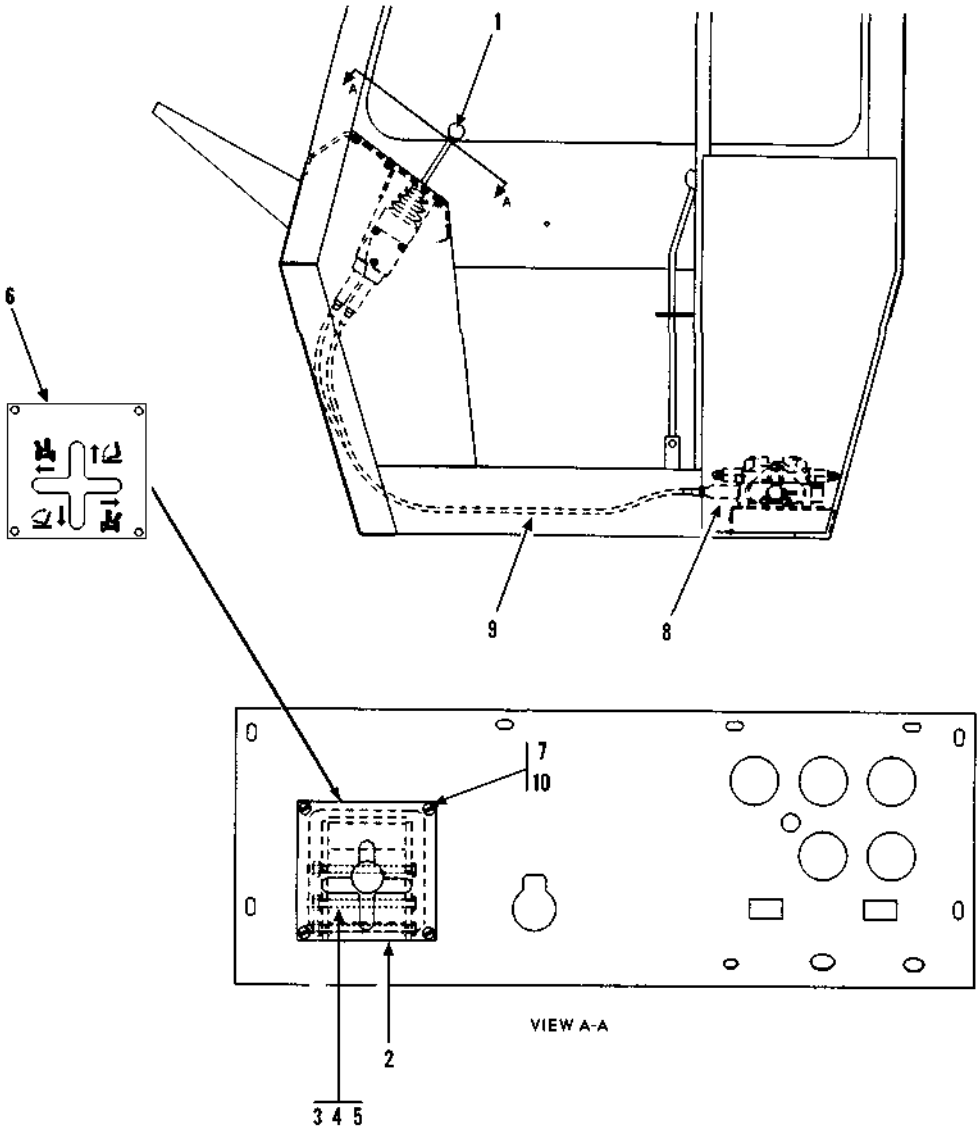

Item	Part No.	Qty.	Description Of Part
	9108-5046	Ref	L.H. TILT/SWAY CONTROL LEVER ASSY (includes all items except four of item 4, and items 7 & 10)
1	9108-3107	1	REMOTE VALVE CONTROL
	9108-4282	1	KNOB
*	9108-4359	1	BOOT
2	9108-6089	1	BRACKET
3	1100-2410	3	HEX HD CAPSCREW, 1/4-28X4-1/2, GR5
4	8855-1009	7	LOCKWASHER, 1/4
5	8850-1304	3	HEX NUT, 1/4-28
6	9108-3341	1	TILT/SWAY CONTROL PLATE
7	8830-1141	4	ROUND HD MACHINE SCREW, 5/16-18X3/4
8	9112-3062	2	CABLE ADAPTER
9	9108-3393	2	CONTROL CABLE
10	8855-1010	4	LOCKWASHER, 5/16

** Added part number 9108-4359 to item 1.*

OPTIONAL EQUIPMENT
(9108-5059) Glow Plug Installation
Original Issue 12-90
Revised 10-11-95

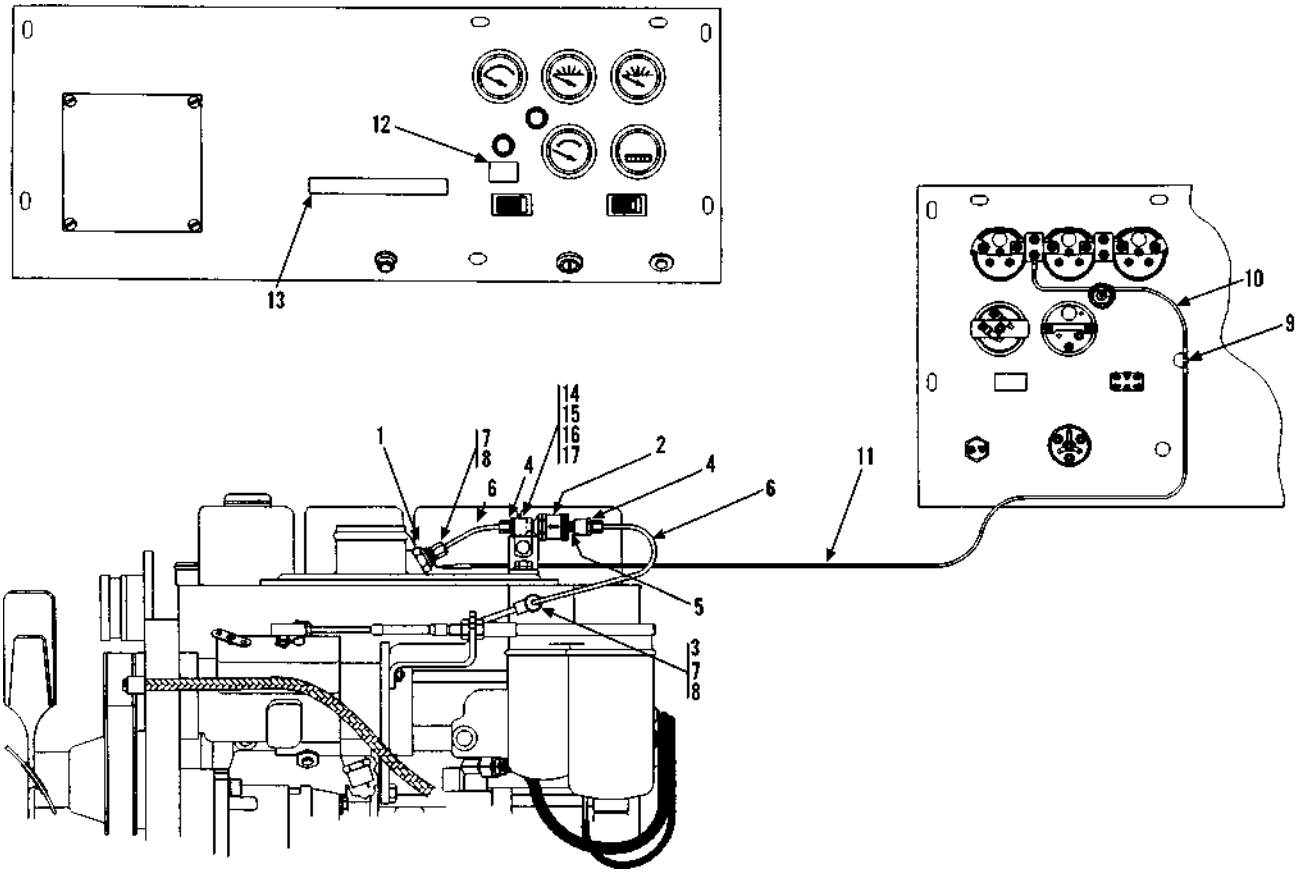

Item	Part No.	Qty.	Description Of Part
	9108-5059	Ref	GLOW PLUG INSTALLATION (includes all items)
1	9108-3372	1	THERMOSTART
2	8668-3330	1	FUEL CHECK VALVE
3	9108-3374	1	BANJO CONNECTOR
4	9108-3380	2	BRASS ADAPTER
5	8870-1002	1	CLOSE NIPPLE, 1/4X7/8
6	9108-1676	1	STEEL TUBE, 3/16" O.D.
7	9108-3375	2	OLIVE
8	9108-3371	2	TUBE NUT
9	2477-1004	1	PUSH BUTTON SWITCH
10	9103-1495	1	JUMPER WIRE
11	9103-1278	1	JUMPER WIRE
12	9103-3251	1	BUTTON DECAL
13	9103-3252	1	INSTRUCTION DECAL
14	9108-1582	1	SUPPORT BRACKET
15	2486-1170	1	CLIP
16	8820-1016	1	HEX HD CAPSCREW, 5/16-18X1/2, GR5
17	8855-1010	1	LOCKWASHER, 5/16

** Changed upper left to designate model more clearly. Added part number to item 6. Relocated items 9, 10, 12 & 13.*

OPTIONAL EQUIPMENT
(9114-5033) Glow Plug Installation
Starting Serial No. 0288777
Original Issue 10-95

PARTIAL VIEW FROM ABOVE DASH

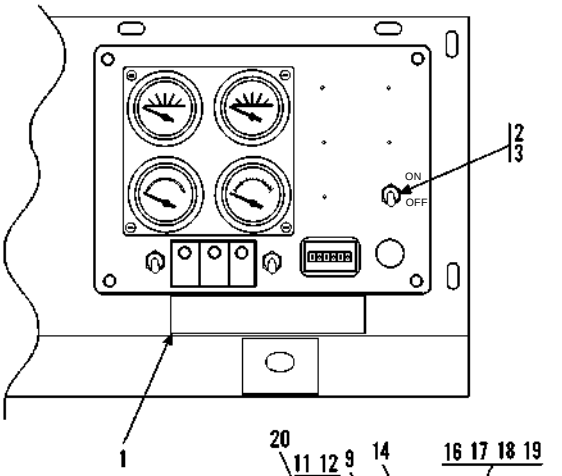

PARTIAL VIEW FROM UNDER DASH

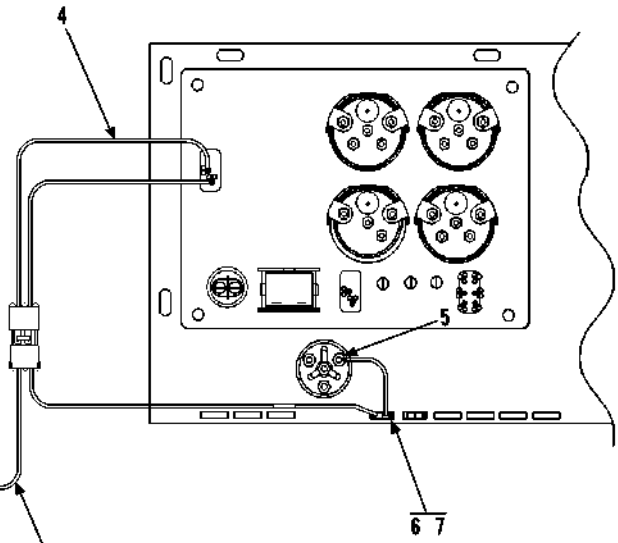

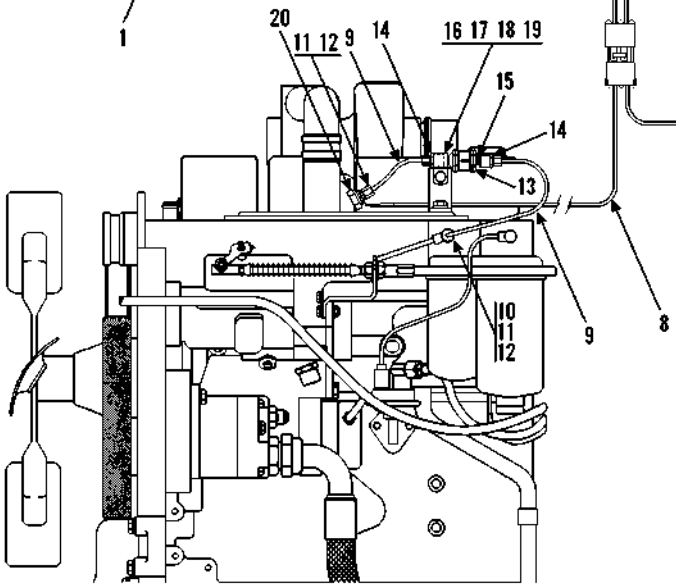

PARTIAL VIEW - ENGINE LEFT SIDE

Item	Part No.	Qty.	Description Of Part
	9114-5033	1	GLOW PLUG INSTALLATION (includes all items)
1	9114-3164	1	INSTRUCTION DECAL
2	9114-3163	1	TOGGLE SWITCH
3	7738-3470	1	BOOT
4	9114-5034	1	WIRING HARNESS
5	8698-3190	1	#10 EYELET
6	9114-3108	1	FUSE HOLDER
7	7736-3268	1	15 AMP FUSE
8	9114-5035	1	WIRING HARNESS
9	9108-1676	1	STEEL TUBE (cut & bend as req'd.)
10	9108-3374	1	BANJO CONNECTOR

Item	Part No.	Qty.	Description Of Part
11	9108-3375	2	OLIVE
12	9108-3371	2	TUBE NUT
13	8668-3330	1	FUEL CHECK VALVE
14	9108-3380	2	BRASS ADAPTER (includes nut & sleeve)
15	8870-1002	1	CLOSE NIPPLE
16	9108-1582	1	SUPPORT BRACKET
17	2486-1170	1	CLIP
18	8820-1016	1	HEX HD CAPSCREW, 5/16-18 X 1/2, GR5
19	8855-1010	1	LOCKWASHER, 5/16
20	9108-3372	1	THERMOSTART

OPTIONAL EQUIPMENT
(9112-5101) Glow Plug Installation
Starting Serial No. 0488238
Original Issue 10-97

PARTIAL VIEW FROM ABOVE DASH

PARTIAL VIEW FROM UNDER DASH

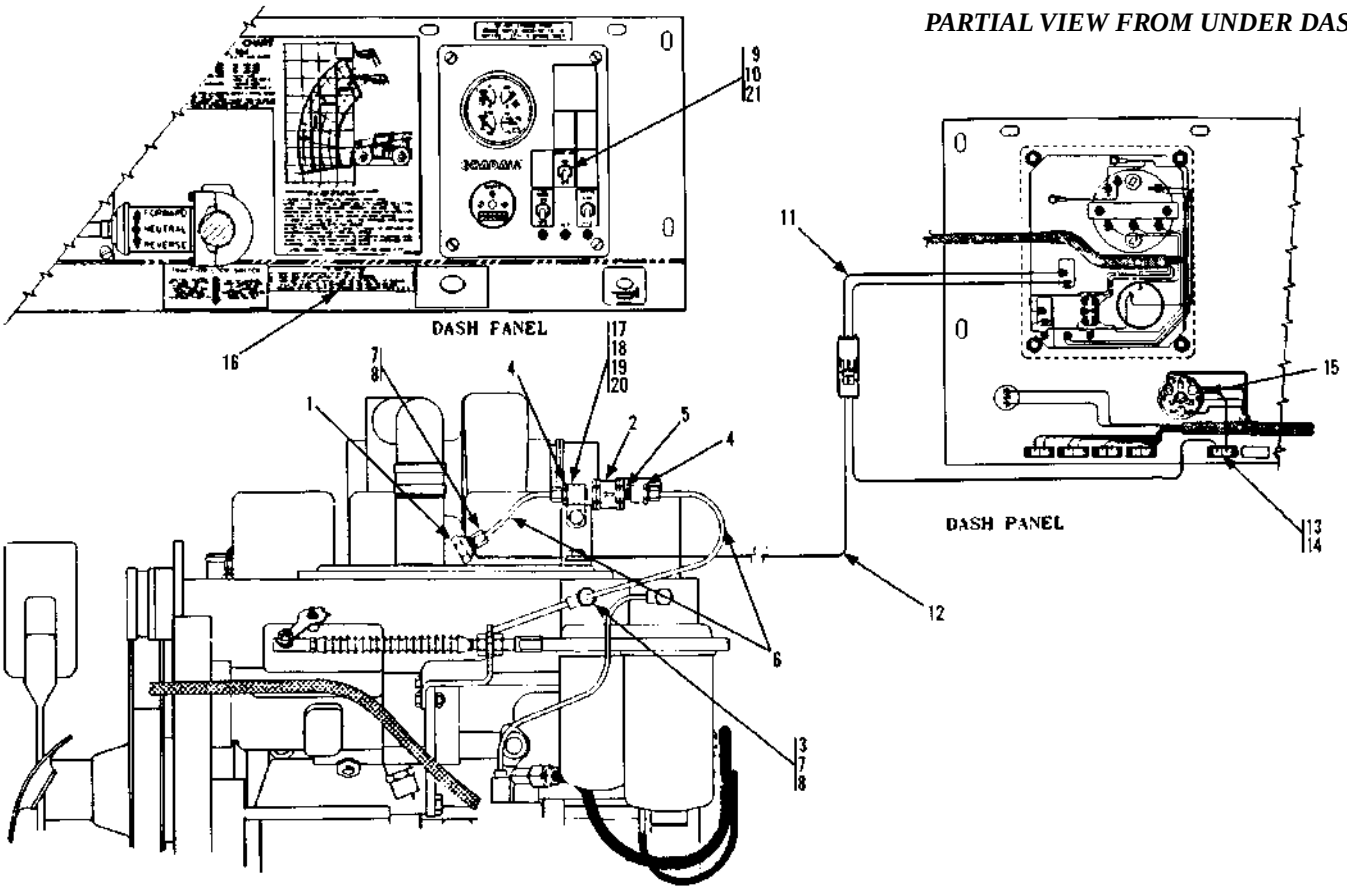

PARTIAL VIEW - ENGINE LEFT SIDE

Item	Part No.	Qty.	Description Of Part
	9112-5101	1	GLOW PLUG INSTALLATION (includes all items)
1	9108-3372	1	THERMOSTART
2	8668-3330	1	FUEL CHECK VALVE
3	9108-3374	1	BANJO CONNECTOR
4	9108-3380	2	BRASS ADAPTER (includes nut & sleeve)
5	8870-1002	1	CLOSE NIPPLE
6	9108-1676	1	STEEL TUBE
7	9108-3375	2	OLIVE
8	9108-3371	2	TUBE NUT
9	9114-3136	1	TOGGLE SWITCH

Item	Part No.	Qty.	Description Of Part
10	7738-3470	1	BOOT
11	9114-5034	1	WIRING HARNESS
12	9114-5035	1	WIRING HARNESS
13	9114-3108	1	FUSE HOLDER
14	7736-3268	1	15 AMP FUSE
15	8698-3190	1	#10 EYELET
16	9114-3164	1	INSTRUCTION DECAL
17	9108-1582	1	SUPPORT BRACKET
18	2486-1170	1	CLIP
19	8820-1016	1	HEX HD CAPSCREW, 5/16-18X1/2, GR5
20	8855-1010	1	LOCKWASHER, 5/16
21	9112-3176	1	START AID DECAL

OPTIONAL EQUIPMENT
(9112-5016) Vandal Cover
Original Issue 12-90
Revised 10-12-95

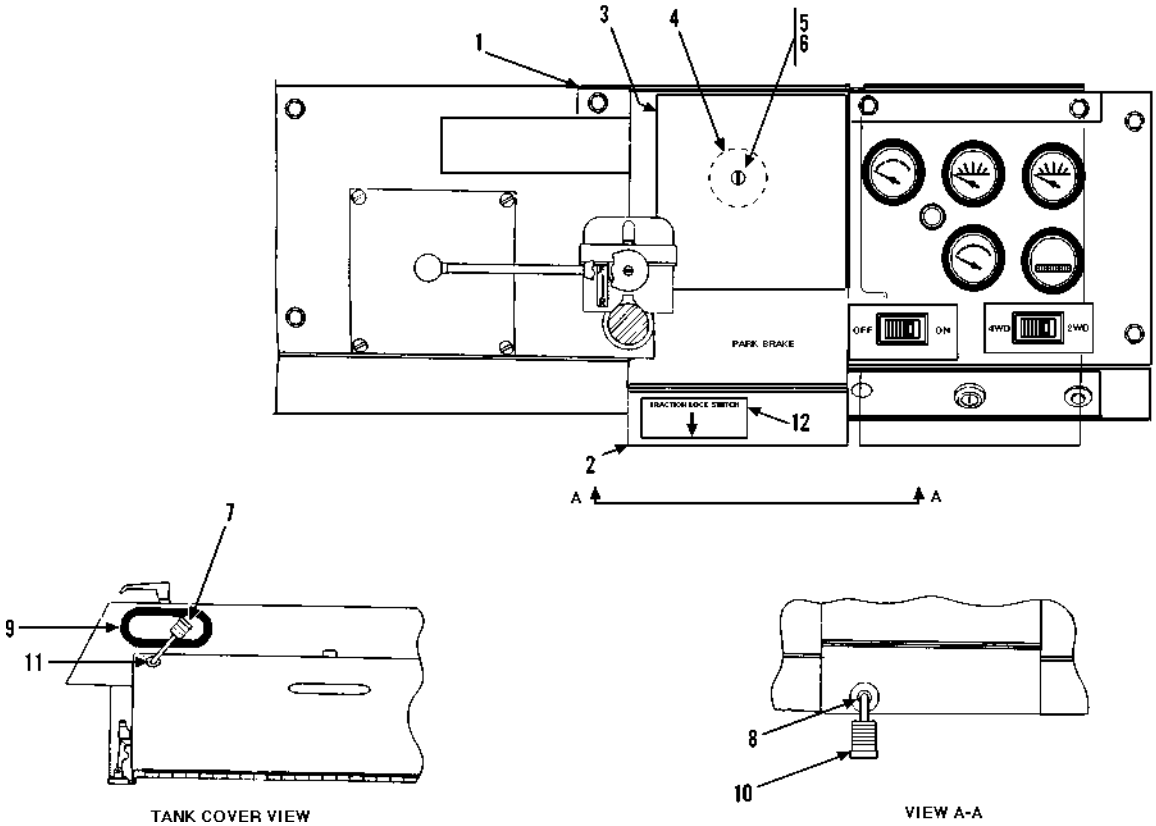

Item	Part No.	Qty.	Description Of Part
	9112-5016	Ref	VANDAL COVER OPTION (includes all items)
1	9108-1603	1	MOUNTING BRACKET
2	9108-1602	1	COVER
* 3	9112-3039	1	CAPACITY DECAL
4	9108-3366	1	VIBRATION MOUNT
5	8830-1126	1	ROUND HD MACHINE SCREW, 1/4-20X3/4
6	8852-1304	1	HEX LOCKNUT, 1/4-20
7	9108-3365	1	PADLOCK
8	8364-1359	2	RUBBER GROMMET
9	9020-6194	12"	TRIM LOCK
10	8564-1094	1	PADLOCK
11	8696-1044	3	RUBBER GROMMET
*12	9108-3314	1	TRACTION DECAL

** Changed part numbers on item 3, added item 12.*

OPTIONAL EQUIPMENT
(9108-5102) Vandal Kit
Starting Serial No. 0288777
Original Issue 10-95

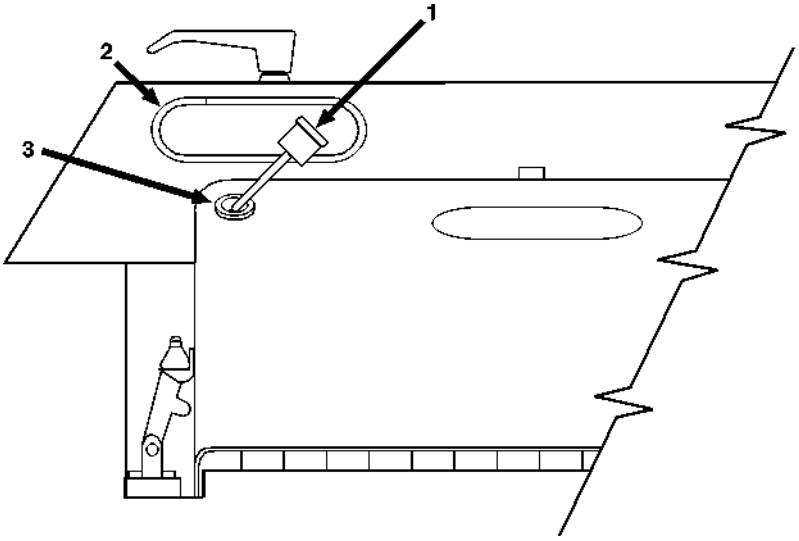

Item	Part No.	Qty.	Description Of Part
	9108-5102	1	VANDAL KIT (includes all items)
1	9108-3365	1	PADLOCK
2	9020-6194	12"	TRIM-LOK
3	8696-1044	3	RUBBER GROMMET

OPTIONAL EQUIPMENT
(9112-5018) Work Light Package

Original Issue 12-90
Revised 10-3-00

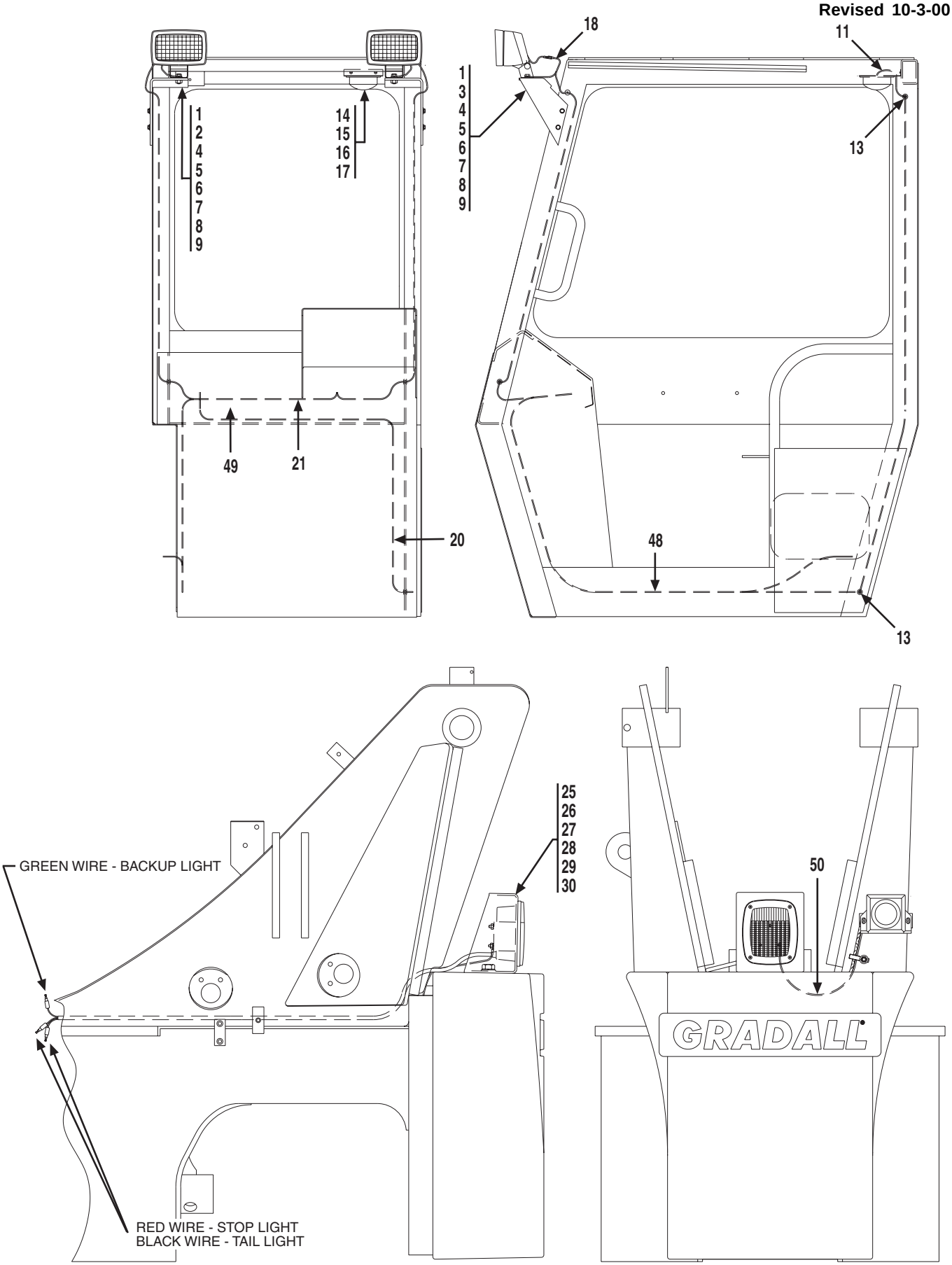

* *Revised illustration and parts list.*

OPTIONAL EQUIPMENT
(9112-5018) Work Light Package
Original Issue 12-90
Revised 10-3-00

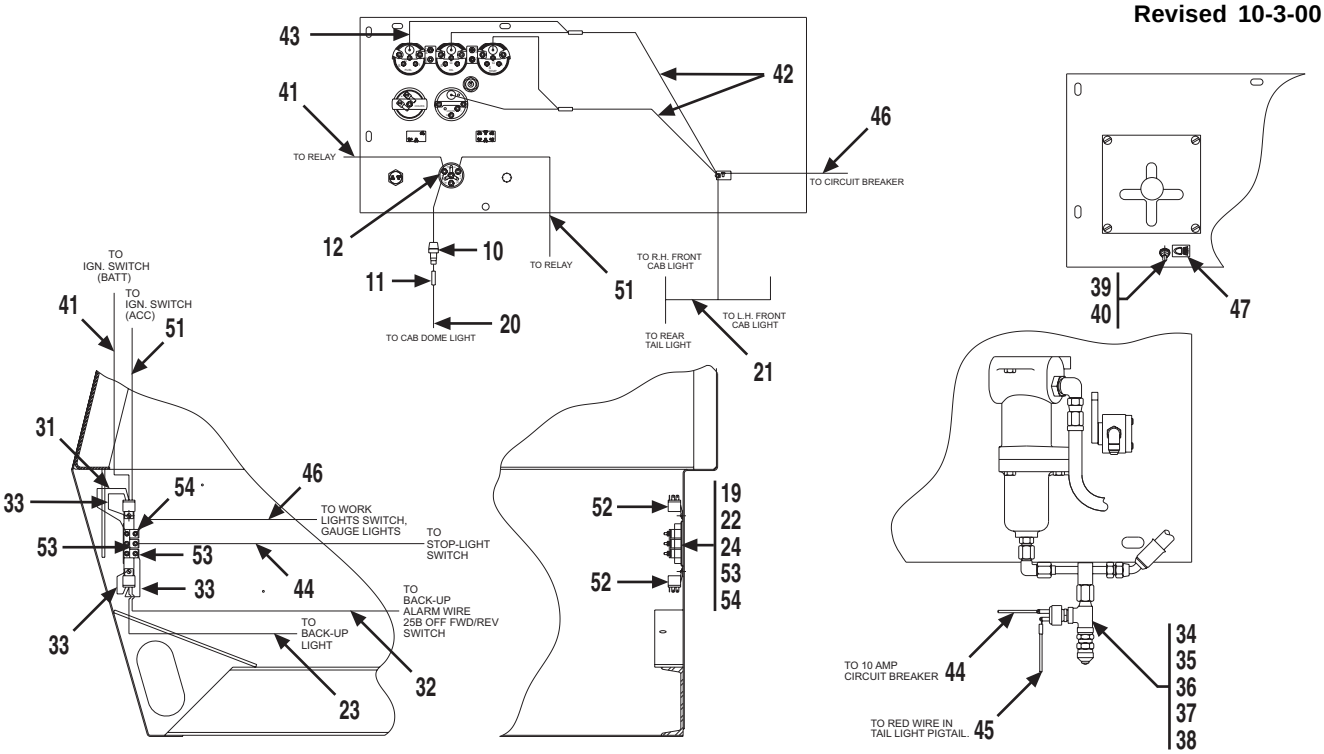

Item	Part No.	Qty.	Description Of Part
	9112-5018	1	WORK LIGHT PACKAGE, (includes all items)
1	9112-5110	2	HALOGEN WORK LIGHT KIT, (includes the following two items)
	8096-3050	1	UTILITY FLOOD LIGHT
	9002-8960	2	MALE TERMINAL
2	9112-1148	1	R.H. LIGHT SUPPORT
3	9112-1149	1	L.H. LIGHT SUPPORT
4	9112-1150	2	JUMPER WIRE
5	8820-1035	2	HEX HD CAPSCREW, 3/8-16X1, GR5
6	8856-1109	2	FLAT WASHER, 3/8
7	8855-1011	2	LOCKWASHER, 3/8
8	8850-1006	2	HEX NUT, 3/8-16
9	9002-7319	4	SELF TAPPING SCREW
10	9020-3376	1	IN LINE FUSE
11	8668-3480	2	BUTT CONNECTOR
12	8698-3188	1	EYELET
13	9002-7214	6	RUBBER GROMMET
14	9101-1009	1	MOUNTING BRACKET
15	9002-9955	1	RUBBER GROMMET
16	8832-1022	2	SELF TAPPING SCREW, #8-32X3/8
17	2486-1167	1	INTERIOR LIGHT
18	7716-3102	2	SLIP-ON ELECTRICAL CONNECTOR
19	8832-1039	2	SELF TAPPING SCREW, 10-32X1/2
20	9112-1151	1	JUMPER WIRE
21	9112-3066	1	LIGHT HARNESS
22	8698-1178	1	BUSS BAR
23	9112-1193	1	JUMPER WIRE
24	7736-3191	1	CIRCUIT BREAKER BRACKET
25	9112-1145	1	TAIL LIGHT HOUSING
26	9112-1146	1	TAIL LIGHT BRACKET
27	9136-5045	1	TAIL LIGHT ASSEMBLY, (includes the following seven items)
	9112-3065	1	TAIL LIGHT
	8666-1147	38"	WIRE, 16 GAUGE. (black)
	8666-1149	38"	WIRE, 16 GAUGE, (green)

Item	Part No.	Qty.	Description Of Part
	8666-1152	38"	WIRE, 16 GAUGE, (red)
	8668-3480	3	BUTT CONNECTOR
	8203-3996	45"	WIRE LOOM
	8668-3122	2	TIE WRAP
28	8820-1108	1	HEX HD CAPSCREW, 3/4-10X1-1/4, GR5
29	8856-1115	1	FLAT WASHER, 3/4
30	8855-1016	1	LOCKWASHER, 3/4
31	9112-1188	1	JUMPER WIRE
32	9112-1192	1	JUMPER WIRE
33	9112-1191	3	JUMPER WIRE
34	8656-1326	1	ADAPTER, 3/8 TUBEX1/4 PIPE
35	9103-3032	1	TEST COUPLING
36	8871-2232	1	STREET TEE
37	8871-1380	1	REDUCING BUSHING, 1/4X1/8
38	8366-3097	1	STOPLIGHT SWITCH
39	7738-3467	1	LIGHT SWITCH
40	7738-3470	1	BOOT
41	9112-1186	1	JUMPER WIRE
42	9112-1152	2	JUMPER WIRE
43	9103-3360	4	GAUGE LIGHTING KIT
44	9112-1190	1	JUMPER WIRE
45	9112-1154	1	JUMPER WIRE
46	9112-1189	1	JUMPER WIRE
47	9100-3055	1	LIGHTS DECAL
48	8668-3122	18	TIE WRAP, (use as needed to tie wires to hoses under floor & in frame)
49	9105-3419	13	TIE WRAP, (use as needed to tie wires up under dash)
50	9112-1181	1	JUMPER WIRE
51	9112-1187	1	JUMPER WIRE
52	7738-3410	2	RELAY
53	8688-3071	2	CIRCUIT BREAKER, 10 AMP
54	8698-3041	1	CIRCUIT BREAKER, 20 AMP

** Revised illustration and parts list.*

OPTIONAL EQUIPMENT
(9114-5021) Work Light Package
Starting Serial No. 0288777
Original Issue 10-95
Revised 10-4-00

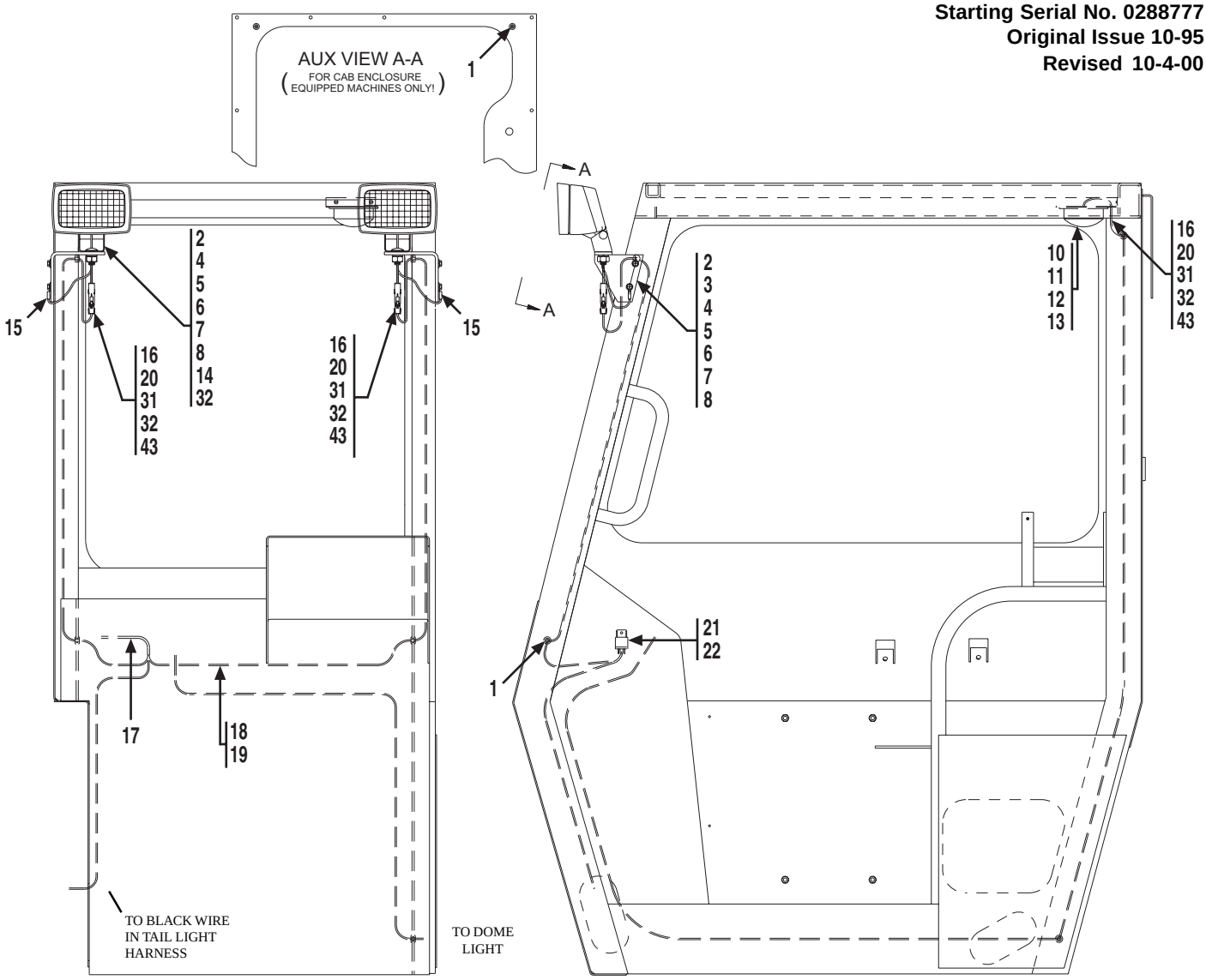

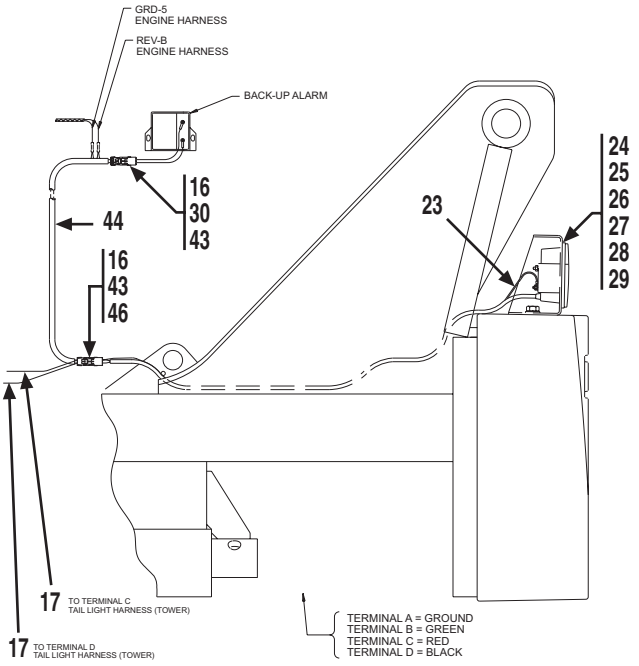

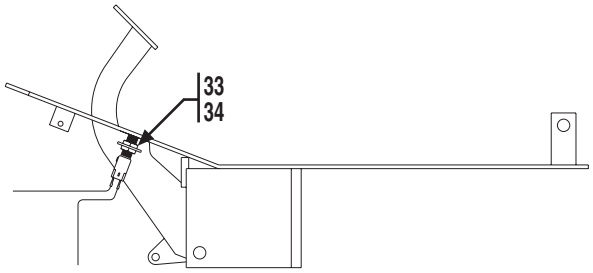

STOPLIGHT SWITCH MOUNTING ON BRAKE PEDAL

* *Revised illustration and parts list.*

OPTIONAL EQUIPMENT
(9114-5021) Work Light Package

Starting Serial No. 0288777
Original Issue 10-95
Revised 10-4-00

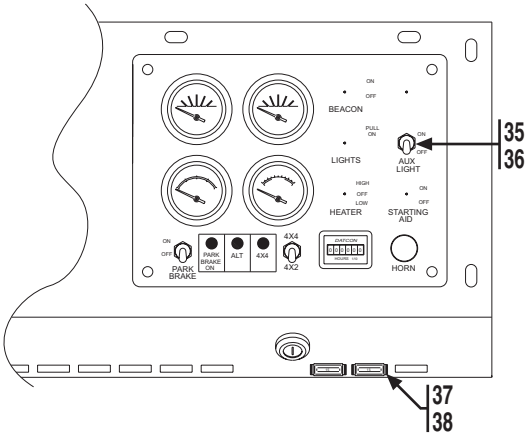

PARTIAL VIEW FROM ABOVE DASH

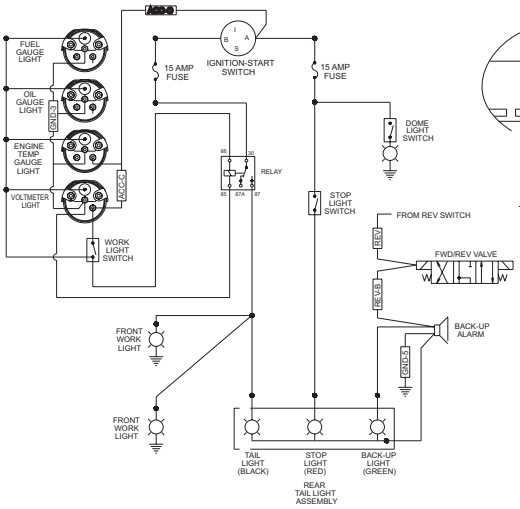

ELECTRICAL SCHEMATIC

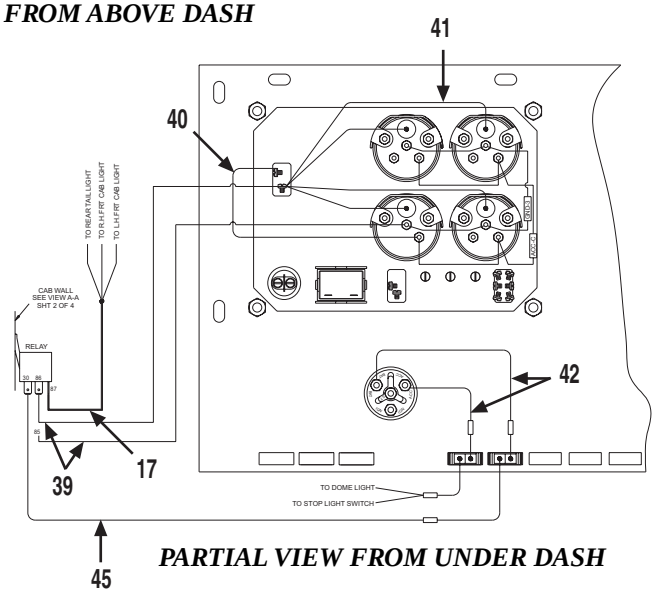

PARTIAL VIEW FROM UNDER DASH

Item	Part No.	Qty.	Description Of Part
	9114-5021	1	WORK LIGHT PACKAGE, (includes all items)
1	9002-7214	8	RUBBER GROMMET
2	8096-3050	2	UTILITY FLOOD LIGHT
3	9114-1183	1	L.H. LIGHT SUPPORT
4	8820-1035	2	HEX HD CAPSCREW, 3/8-16X1, GR5
5	8856-1109	2	FLAT WASHER, 3/8
6	8855-1011	2	LOCKWASHER, 3/8
7	8850-1006	2	HEX NUT, 3/8-16
8	9002-7319	4	TAP SCREW, 1/4-20X1
9		AR	WIRE LOOM, (use on all wires)
10	9101-1009	1	MOUNTING BRACKET
11	9002-9955	1	RUBBER GROMMET
12	8832-1022	2	SELF TAPPING SCREW, #8-32X3/8
13	2486-1167	1	INTERIOR LIGHT
14	9114-1182	1	R.H. LIGHT SUPPORT
15	8688-3260	2	EYELET
16	8096-3069	9	W. PACK CONNECTOR, (male pin)
17	9114-3270	1	LIGHT HARNESS
18	9105-3419	19	TIE WRAP
19	8668-3122	6	TIE WRAP
20	8096-3068	3	W. PACK CONNECTOR, (female pin)
21	7738-3410	1	RELAY, (located on side wall of cab)
22	8832-1039	1	SELF TAPPING SCREW, #10-32X1/2
23	9114-1364	1	JUMPER WIRE
24	8820-1108	1	HEX HD CAPSCREW, 3/4-10X1-1/4, GR5
25	8856-1115	1	FLAT WASHER, 3/4
26	8855-1016	1	LOCKWASHER, 3/4
27	9112-1145	1	TAIL LIGHT HOUSING
28	9112-1146	1	TAIL LIGHT BRACKET

Item	Part No.	Qty.	Description Of Part
29	9136-5045	1	TAIL LIGHT ASSEMBLY, (includes the following seven items)
	9112-3065	1	TAIL LIGHT
	8666-1147	38"	WIRE, 16 GAUGE, (black)
	8666-1149	38"	WIRE, 16 GAUGE, (green)
	8666-1152	38"	WIRE, 16 GAUGE, (red)
	8668-3480	3	BUTT CONNECTOR
	8203-3996	45"	WIRE LOOM
	8668-3122	2	TIE WRAP
30	8096-3058	1	W. PACK CONNECTOR, (shroud)
31	8096-3056	3	W. PACK CONNECTOR, (shroud)
32	8096-3055	3	W. PACK CONNECTOR, (tower)
33	9114-3117	1	STOP LIGHT SWITCH
34	9114-1197	1	MOUNTING TAB
35	7738-3467	1	LIGHT SWITCH
36	7738-3470	1	BOOT
37	9114-3108	2	FUSE HOLDER
38	7736-3268	2	FUSE, 15 AMP
39	9114-1265	2	JUMPER WIRE
40	9114-1258	1	JUMPER WIRE
41	9103-3360	4	GAUGE LIGHTING KIT
42	9114-1259	7	JUMPER WIRE
43	8096-3066	12	W. PACK CONNECTOR, (cable seal)
44	9114-3210	1	TAIL LIGHT HARNESS
45	9114-1266	1	JUMPER WIRE
46	8096-3062	1	W. PACK CONNECTOR, (shroud)

* *Revised illustration and parts list.*

OPTIONAL EQUIPMENT
(9114-5098) Work Light Package

Starting Serial No. 0488238
Original Issue 10-97
Revised 10-5-00

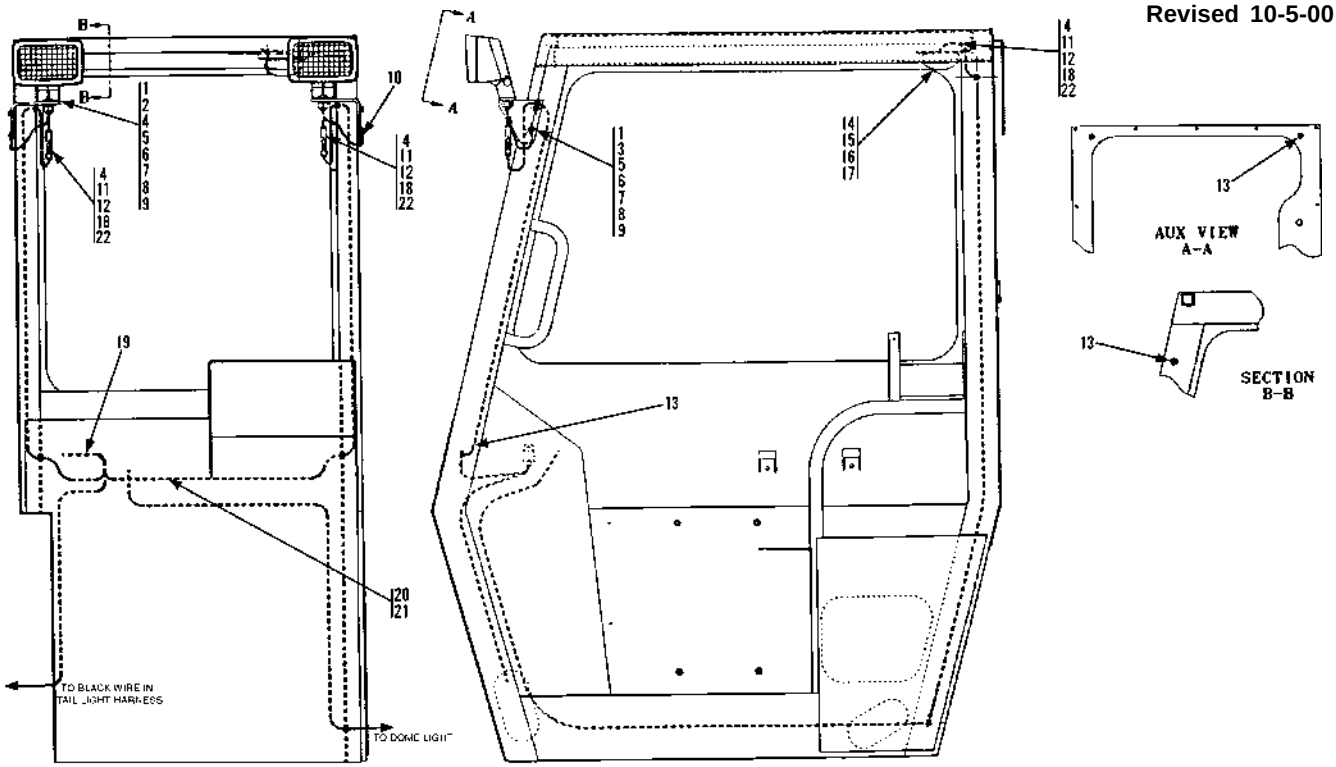

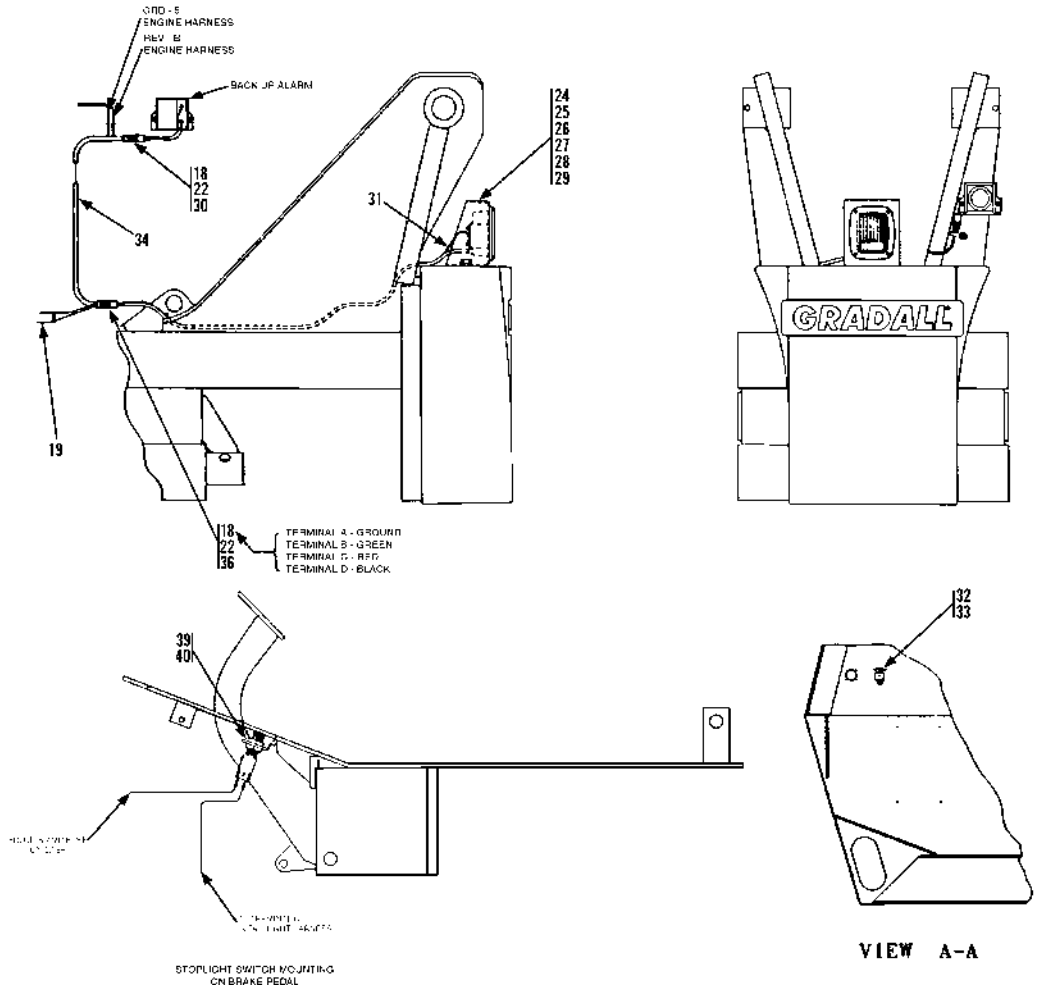

** Revised illustration and parts list.*

OPTIONAL EQUIPMENT
(9114-5098) Work Light Package

Starting Serial No. 0488238
Original Issue 10-97
Revised 10-5-00

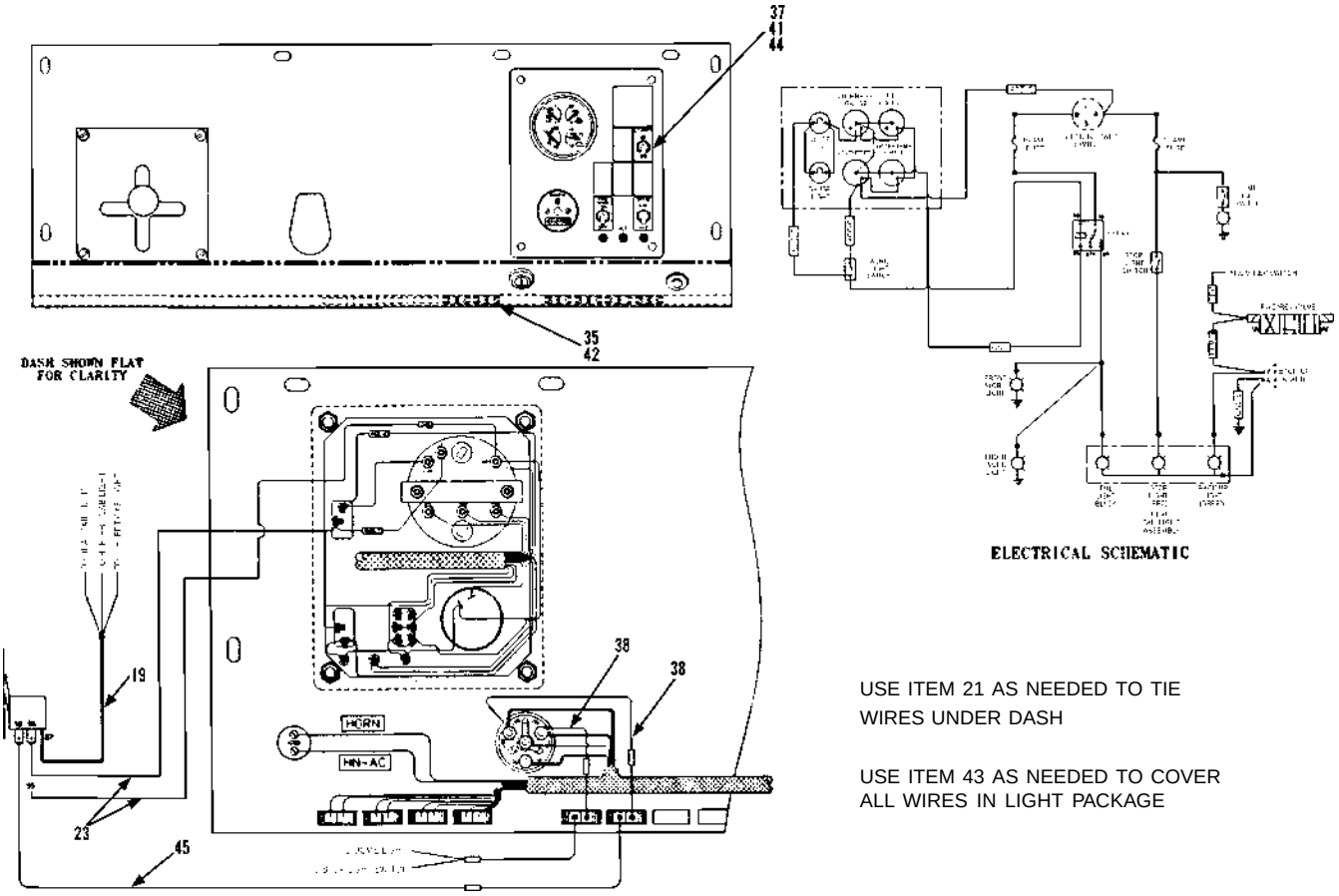

USE ITEM 21 AS NEEDED TO TIE WIRES UNDER DASH

USE ITEM 43 AS NEEDED TO COVER ALL WIRES IN LIGHT PACKAGE

Item	Part No.	Qty.	Description Of Part
	9114-5098	1	WORK LIGHT PACKAGE, (includes all items)
1	8096-3050	2	UTILITY FLOOD LIGHT
2	9114-1182	1	R.H. LIGHT SUPPORT
3	9114-1183	1	L.H. LIGHT SUPPORT
4	8096-3055	4	W. PACK CONNECTOR, (tower)
5	8820-1035	2	HEX HD CAPSCREW, 3/8-16X1, GR5
6	8856-1109	2	FLAT WASHER, 3/8
7	8855-1011	2	LOCKWASHER, 3/8
8	8850-1006	2	HEX NUT, 3/8-16
9	9002-7319	4	TAP SCREW, 1/4-20X1
10	8688-3260	2	EYELET
11	8096-3056	3	W. PACK CONNECTOR, (shroud)
12	8096-3068	3	W. PACK CONNECTOR, (female pin)
13	9002-7214	8	RUBBER GROMMET
14	9101-1009	1	MOUNTING BRACKET
15	9002-9955	1	RUBBER GROMMET
16	8832-1022	2	SELF TAPPING SCREW, #8-32X3/8
17	2486-1167	1	INTERIOR LIGHT
18	8096-3069	9	W. PACK CONNECTOR, (male pin)
19	9114-3270	1	LIGHT HARNESS
20	8668-3122	6	TIE WRAP
21	9105-3419	19	TIE WRAP
22	8096-3066	12	W. PACK CONNECTOR, (cable seal)
23	9114-1265	2	JUMPER WIRE
24	9112-1145	1	TAIL LIGHT HOUSING
25	9112-1146	1	TAIL LIGHT BRACKET

Item	Part No.	Qty.	Description Of Part
26	9136-5045	2	TAIL LIGHT ASSEMBLY, (includes the following seven items)
	9112-3065	1	TAIL LIGHT
	8666-1147	38"	WIRE, 16 GAUGE, (black)
	8666-1149	38"	WIRE, 16 GAUGE, (green)
	8666-1152	38"	WIRE, 16 GAUGE, (red)
	8668-3480	3	BUTT CONNECTOR
	8203-3996	45"	WIRE LOOM
	8668-3122	2	TIE WRAP
27	8820-1108	1	HEX HD CAPSCREW, 3/4-10X1-1/4, GR5
28	8856-1115	1	FLAT WASHER, 3/4
29	8855-1016	1	LOCKWASHER, 3/4
30	8096-3058	1	W. PACK CONNECTOR, (shroud)
31	9114-1364	1	JUMPER WIRE
32	7738-3410	1	RELAY
33	8832-1039	1	SELF TAP SCREW, #10-32X1/2
34	9114-3210	1	TAIL LIGHT HARNESS
35	7736-3268	2	FUSE, 15 AMP
36	8096-3062	1	W. PACK CONNECTOR, (shroud)
37	7738-3470	1	BOOT
38	9114-1259	2	JUMPER WIRE
39	9114-1197	1	MOUNTING TAB
40	9114-3117	1	STOPLIGHT SWITCH
41	7738-3467	1	LIGHT SWITCH
42	9114-3108	2	FUSE HOLDER
43		AR	WIRE LOOM, (use on all wires)
44	9136-3009	1	LIGHTS ON/OFF DECAL
45	9114-1266	1	JUMPER WIRE

** Revised illustration and parts list.*

OPTIONAL EQUIPMENT
(9108-5056) Quick Hook Assmbly
Original Issue 12-90
Revised 7-25-06

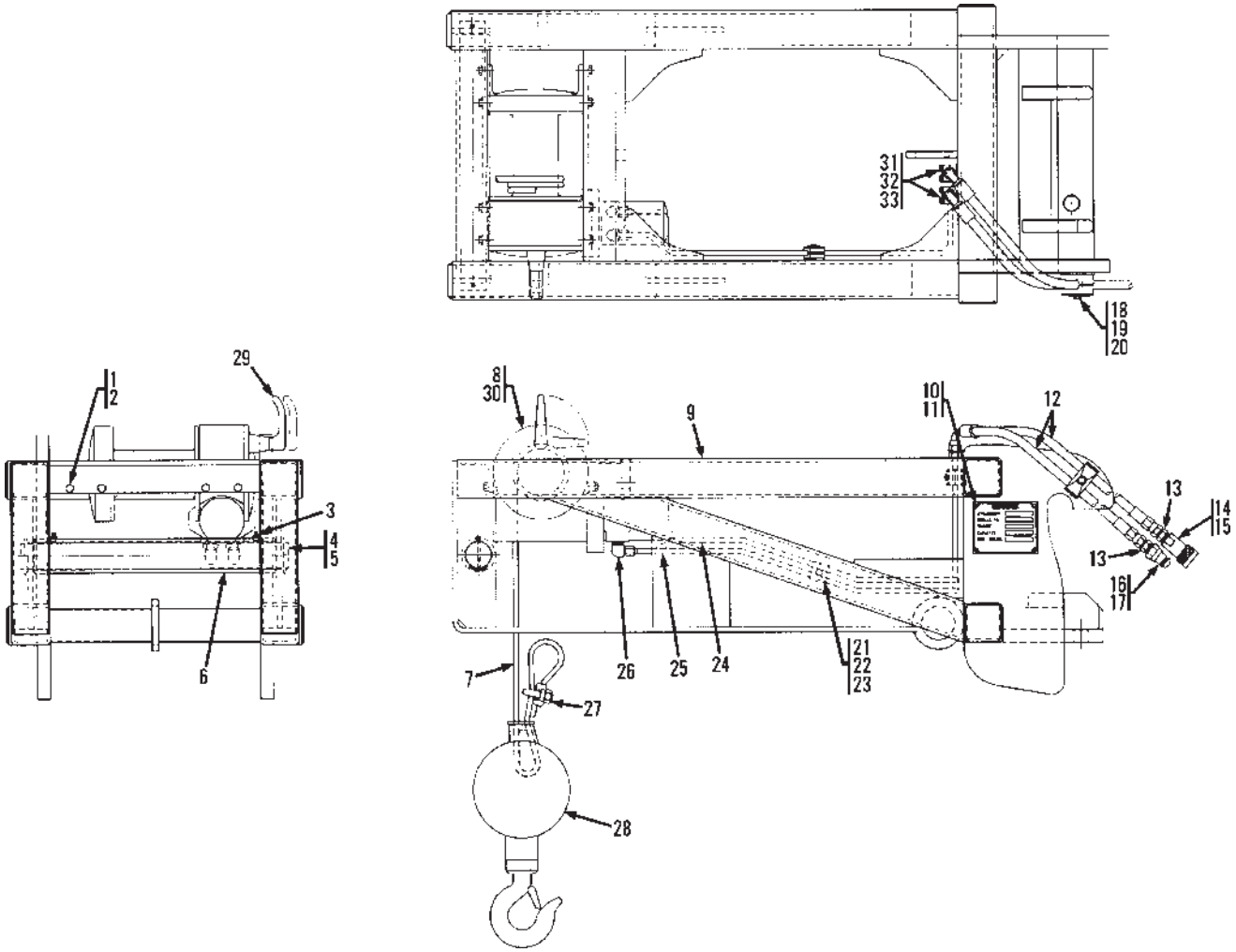

Item	Part No.	Qty.	Description Of Part
	9108-5056	Ref	QUICK HOOK ASSY, (includes all items)
1	8855-1011	8	LOCKWASHER, 3/8
2	8820-1034	8	HEX HD CAPSCREW, 3/8-16X7/8, GR5
3	8867-1001	2	LUBE FITTING, STRAIGHT, 1/8
4	9108-1574	1	PIN
5	8863-1343	2	COTTER PIN
6	9108-1573	1	ROLLER
7	9108-3368	1	WIRE ROPE, (7/16" Dia.)
8	9108-3367	1	WINCH
9	9108-6119	1	QUICK HOOK WELDMENT
10	9015-3001	1	SERIAL NO. PLATE
11	8834-1022	4	ROUND HD DRIVE SCREW, #10X3/8
12	9020-5126	2	HOSE ASSY
13	7736-3079	2	STRAIGHT THREAD CONNECTOR, **(Before S/N 2005283-01)**
	8866-2006	2	CONNECTOR, (includes 8859-1205 o-ring), **(S/N 2005283-01 & After)**
14	9104-3125	1	DUST CAP
15	9116-3139	1	FEMALE HYDRAULIC COUPLING, **(Before S/N 2005283-01)**
	9140-3413	1	FEMALE HYDRAULIC COUPLING, **(S/N 2005283-01 & Afte**

Item	Part No.	Qty.	Description Of Part
16	9104-3126	1	DUST CAP
17	9116-3138	1	MALE HYDRAULIC COUPLING, **(Before S/N 2005283-01)**
	9140-3414	1	MALE HYDRAULIC COUPLING, **(S/N 2005283-01 & After)**
18	7713-3136	1	STAUFF CLAMP SET
19	7713-3137	1	STAUFF COVER PLATE
20	8820-1023	1	HEX BOLT
21	7713-3270	1	STAUFF CLAMP SET
22	8856-1002	1	STAUFF COVER PLATE
23	8820-1005	1	HEX BOLT
24	9114-3276	1	TUBE ASSY
25	9114-3275	1	TUBE ASSY
26	8866-1110	2	MALE ELBOW, 90 DEGREES, 3/8X1/2 TUBE
27	9002-9999	1	WIRE ROPE CLAMP, 7/16
28	9020-1443	1	HOOK & BALL
29	9114-3277	1	L-HANDLE
30	9108-1737	1	WEDGE
31	9106-3040	2	CLAMP SET
32	9106-3039	2	COVER PLATE
33	8820-1006	4	HEX BOLT

** Revised illustration & parts list.*

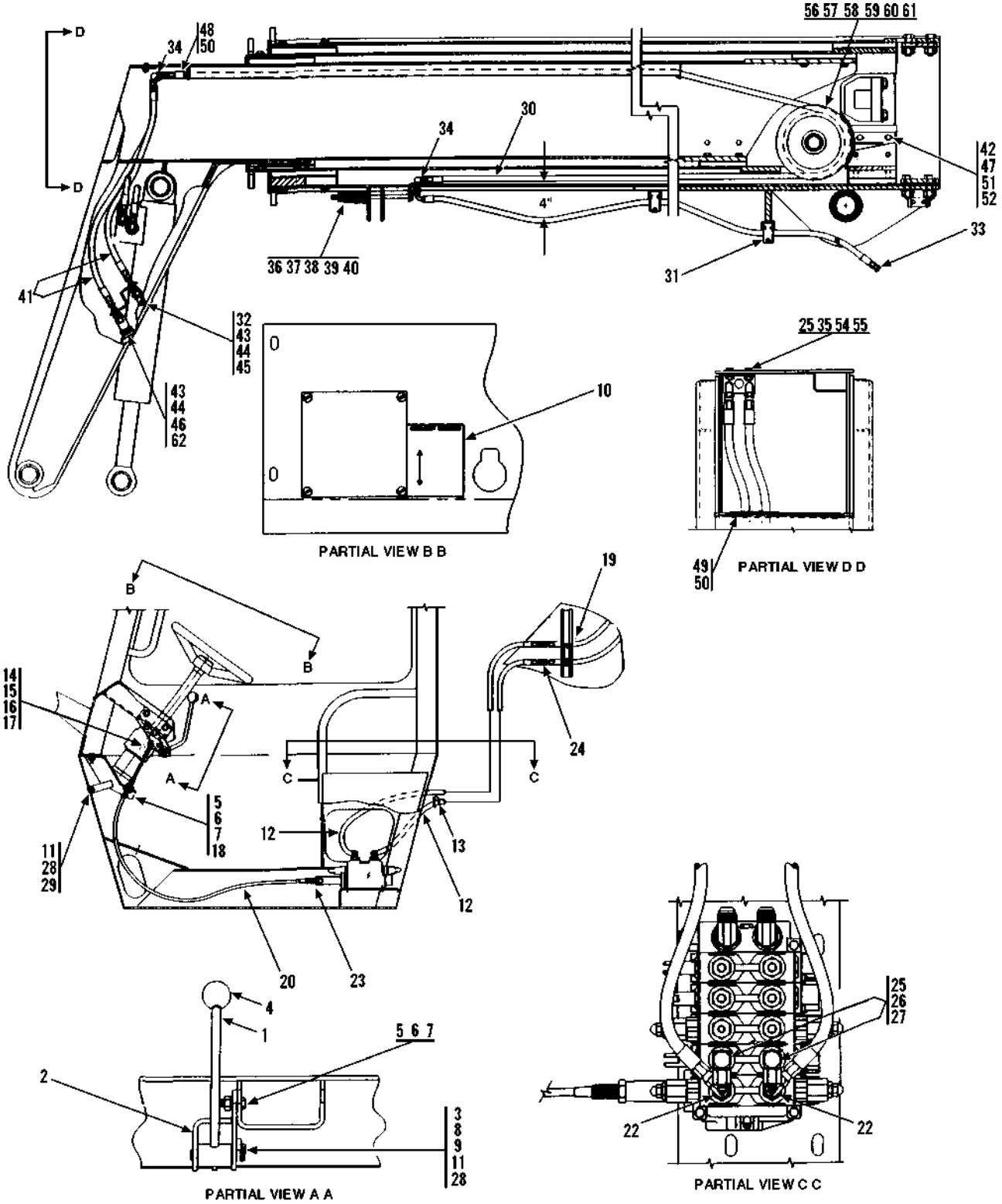

 ** Changed part number on item 42, moved items 63& 64 to items 32 & 33 respectively.*

OPTIONAL EQUIPMENT
(9112-5011) Auxiliary Hydraulics
Original Issue 12-90
Revised 2-9-98

Item	Part No.	Qty.	Description Of Part
	9112-5011	Ref	AUXILIARY HYDRAULIC ASSY (includes all items)
1	9112-6026	1	HANDLE WELDMENT
2	9112-6025	1	LEVER BRACKET
3	9112-6027	1	PIN WELDMENT
4	9020-0299	1	KNOB
5	8820-1036	4	HEX HD CAPSCREW, 3/8-16X1-1/4, GR5
6	8850-1006	4	HEX NUT, 3/8-16
7	8855-1011	4	LOCKWASHER, 3/8
8	9108-3136	2	BUSHING
9	9002-8662	2	WAVE BEND WASHER
10	9103-3417	1	AUXILIARY CONTROL DECAL
11	8820-1018	2	HEX HD CAPSCREW, 5/16X3/4, GR5
12	8471-8040	2	HOSE ASSY
13	9002-7187	10	TIE WRAP
14	8882-1002	1	ADJUSTABLE YOKE END
15	8863-3001	1	YOKE PIN, 1/4
16	8863-1302	1	COTTER PIN, 1/16X3/4
17	8850-1404	1	HEX JAM NUT, 1/4-28
18	9112-6023	1	CABLE BRACKET WELDMENT
19	9020-7464	2	CUSHION CLAMP
20	9112-3050	1	PUSH-PULL CABLE
21	8859-1206	2	O-RING
22	9108-3310	2	ELBOW, 90 DEGREES
23	9112-3062	1	CABLE ADAPTER BONNET
24	8866-1065	2	UNION, 1/2 TUBE
25	9108-3343	2	ELBOW, 90 DEGREES
26	8866-1348	2	TUBE END REDUCER, 5/8X1/4
27	8866-1407	2	NUT, 5/8
28	8855-1010	2	LOCKWASHER, 5/16
29	8850-1005	1	HEX NUT, 5/16-18
30	8471-7895	2	HOSE ASSY

Item	Part No.	Qty.	Description Of Part
31	9020-7463	8	CUSHION CLAMP, 3/4 I.D.
*32	9104-3126	1	DUST CAP
*33	8471-7894	2	HOSE ASSY
34	9002-7179	4	90 DEGREE BULKHEAD FITTING
35	8855-1010	2	LOCKWASHER, 5/16
36	9112-3054	2	COMPRESSION SPRING
37	9112-1134	2	SPRING RETAINER
38	8850-1008	2	HEX NUT, 1/2-13
39	8850-1108	2	HEX JAM NUT, 1/2-13
40	9112-6008	2	HOSE TAKE-UP WELDMENT
41	8471-8041	2	HOSE ASSY
*42	9112-6080	1	HOSE GUARD
43	9112-3061	2	BULKHEAD FITTING
44	8871-2305	2	REDUCING BUSHING, 1/2X1/4
45	9020-4244	1	MALE HYDRAULIC COUPLER
46	9020-4245	1	FEMALE HYDRAULIC COUPLER
47	8820-1034	2	HEX HD CAPSCREW, 3/8-16X7/8, GR5
48	9020-6194	3.5"	TRIM-LOCK
49	9020-6199	13"	TRIM-LOCK
50	1440-2248	AR	ADHESIVE
51	8855-1011	2	LOCKWASHER, 3/8
52	8856-1109	2	FLAT WASHER, 3/8
53	9112-1125	1	BULKHEAD BRACKET
54	8820-1019	2	HEX HD CAPSCREW, 5/16-18X7/8, GR5
55	8850-1005	2	HEX NUT, 5/16-18
56	9112-3016	1	AUXILIARY HOSE SHEAVE
57	9108-1326	1	HOSE REEL SUPPORT
58	9020-3040	1	THRUST WASHER
59	8858-1320	1	EXTERNAL RETAINING RING
60	8320-1123	3	HEX HD CAPSCREW, 1/2-13X1
61	9002-7471	3	HARDENED FLAT WASHER, 1/2
62	9104-3125	1	DUST PLUG

** Changed part number on item 42, moved items 63& 64 to items 32 & 33 respectively.*

OPTIONAL EQUIPMENT
(9112-5043) Auxiliary Hydraulic Assembly w/Electric

Starting Serial No. 0288777
Original Issue 10-95
Revised 6-25-99

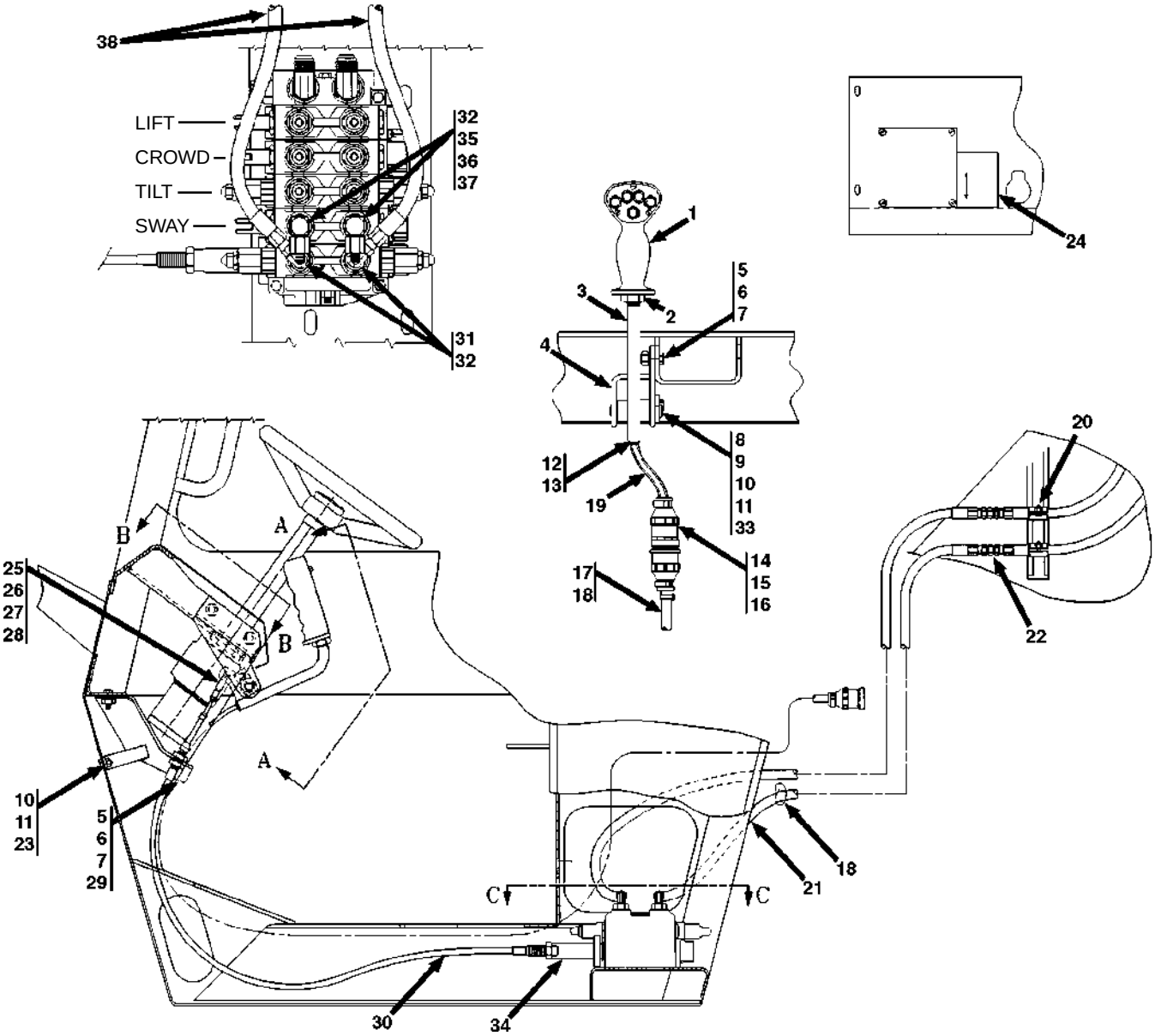

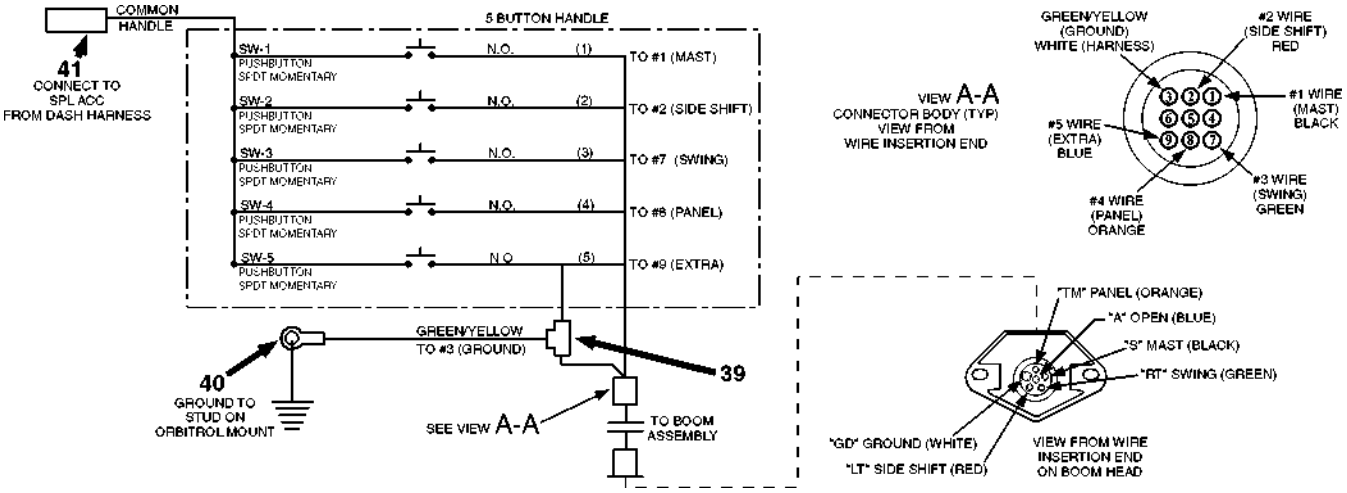

** Added part breakdown and see page for 5-button handle.*

OPTIONAL EQUIPMENT
(9112-5043) Auxiliary Hydraulic Assembly w/Electric

Starting Serial No. 0288777
Original Issue 10-95
Revised 6-25-99

Item	Part No.	Qty.	Description Of Part
	9112-5043	Ref	AUXILIARY HYDRAULICS ASSY (includes all items on both pages)
* 1		Ref	5 BUTTON HANDLE (see page 13-44 for details)
2	8850-1112	1	HEX JAM NUT, 3/4-16
3	9112-6024	1	LEVER WELDMENT
4	9112-6025	1	LEVER BRACKET
5	8820-1036	4	HEX HD CAPSCREW, 3/8-16 x 1 1/4
6	8850-1006	4	HEX NUT, 3/8-16
7	8855-1011	4	LOCKWASHER, 3/8
8	9112-6027	1	PIN WELDMENT
9	9108-3136	2	BUSHING
10	8820-1018	2	HEX HD CAPSCREW, 5/16-18 x 3/4
11	8855-1010	2	LOCKWASHER, 5/16
12	9112-3051	1	MOLDED RUBBER BUSHING
13	1440-2248	AR	3M ADHESIVE
14	9002-8956	1	CONNECTOR BODY
15	9002-8958	6	TERMINAL
16	9002-8978	1	CABLE CLAMP
17	9040-3396	1	AUXILIARY WIRING HARNESS
18	9002-7187	14	TIE WRAP
19	8203-3993	12"	LOOM, 5/16 I.D.

Item	Part No.	Qty.	Description Of Part
20	9020-7464	2	CUSHION CLAMP, 3/4
21	8471-8040	2	HOSE ASSY
22	8866-1065	2	UNION, 1/2 TUBE
23	8850-1005	1	HEX NUT, 5/16
24	9103-3394	1	AUXILIARY CONTROL DECAL
25	8882-1002	1	YOKE END
26	8863-3001	1	CLEVIS PIN
27	8863-1302	1	COTTER PIN, 1/16 x 3/4
28	8850-1404	1	HEX JAM NUT, 1/4-28
29	9112-6023	1	CABLE BRACKET WELDMENT
30	9112-3050	1	PUSH-PULL CABLE
31	9108-3310	2	ELBOW, 90 DEGREE (includes item 32)
32	8859-1206	2	O-RING
33	9002-8662	2	WAVE BEND WASHER
34	9112-3062	1	CABLE ADAPTER BONNET
35	9108-3343	2	ELBOW, 90 DEGREES
36	8866-1348	2	TUBE END REDUCER, 5/8 TO 3/4
37	8866-1407	2	NUT, 5/8
38	8471-8040	2	HOSE ASSY
39	9002-8968	1	CONNECTOR
40	9103-3391	1	INSULATED RING TERMINAL
41	8698-3193	1	MALE BULLET

** Added part breakdown and see page for 5-button handle.*

OPTIONAL EQUIPMENT
(9112-5043) Auxiliary Hydraulic Assembly w/Electric

Starting Serial No. 0288777
Original Issue 10-95
Revised 6-25-99

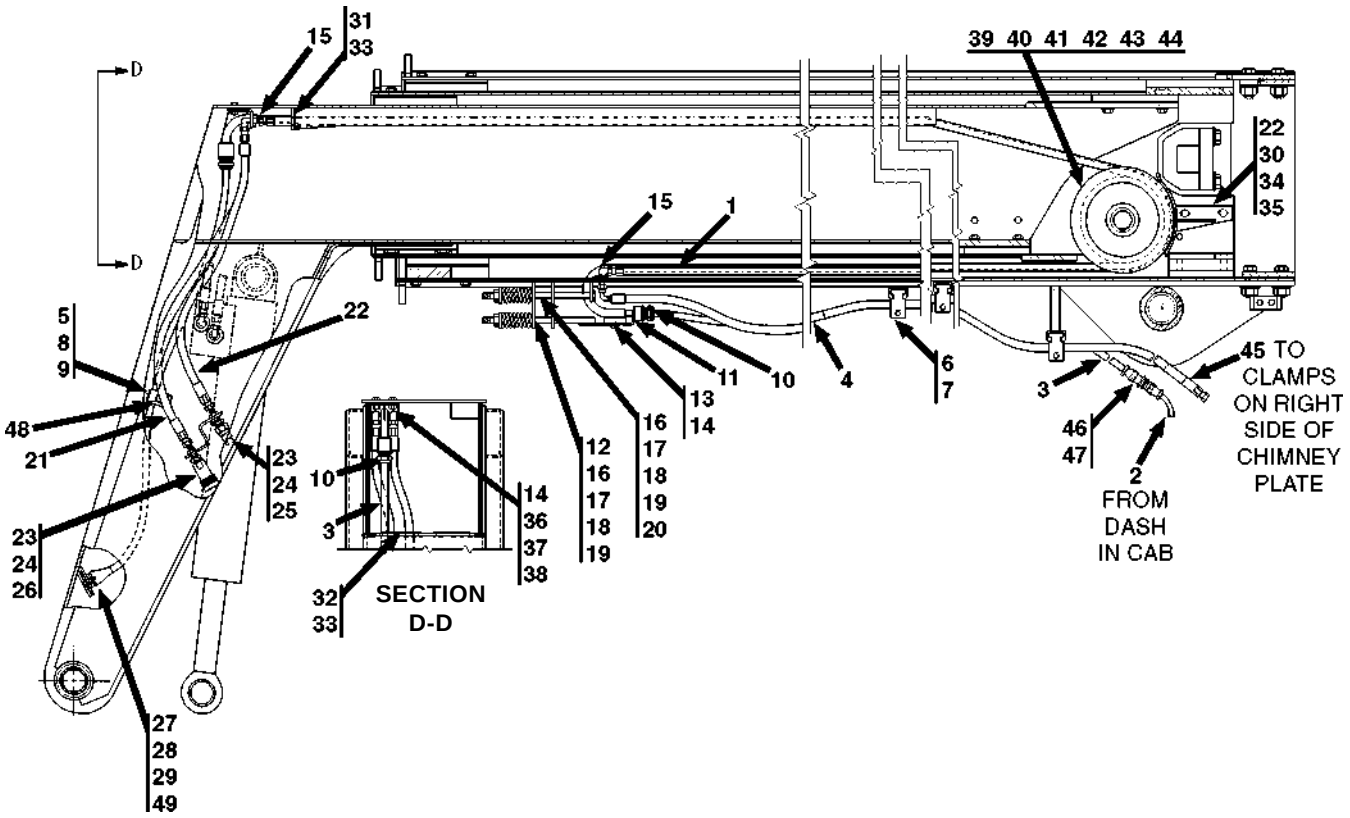

Item	Part No.	Qty.	Description Of Part
	9112-5043	Ref	AUXILIARY HYDRAULICS ASSY (includes all items on both pages)
1	8471-7895	2	HOSE ASSY
2	9040-3396	Ref	AUXILIARY WIRING HARNESS (see previous page)
3	9112-3057	1	AUXILIARY WIRING HARNESS
4	9002-7187	8	NYLON TIES
5	7713-3168	1	STAUFF CLAMP SET
6	9108-3216	4	CUSHION CLAMP, 1/2" O.D.
7	9020-7463	8	CUSHION CLAMP, 3/4 O.D.
8	7713-3140	1	STAUFF COVER PLATE
9	7713-3177	1	HEX BOLT
10	9112-3055	2	STRAIN RELIEF FITTING
11	9112-6031	1	CABLE TAKE-UP WELD
12	9112-6032	1	CABLE TAKE-UP SUPPORT
13	8820-1017	2	HEX HD CAPSCREW, 5/16-18 x 5/8
14	8855-1010	4	LOCKWASHER, 5/16
15	9002-7179	4	BULKHEAD FITTING, 90 DEGREES
16	9112-3054	3	COMPRESSION SPRING
17	9112-1134	3	SPRING RETAINER
18	8850-1008	3	HEX NUT, 1/2-13
19	8850-1108	3	HEX JAM NUT, 1/2-13
20	9112-6008	2	HOSE TAKE-UP WELD
21	8471-8041	2	HOSE ASSY
22	9112-6080	1	HOSE GUARD
23	9112-3061	2	BULKHEAD FITTING

Item	Part No.	Qty.	Description Of Part
24	8871-2305	2	PIPE BUSHING, 1/2 x 1/4
25	9020-4244	1	MALE HYDRAULIC COUPLER
26	9020-4245	1	FEMALE HYDRAULIC COUPLER
27	9020-7661	1	6 CONTACT SOCKET
28	8820-1005	2	HEX HD CAPSCREW, 1/4-20 x 1
29	8852-1304	2	FLEX-LOC NUT, 1/4-20
30	8820-1034	2	HEX HD CAPSCREW, 3/8-16 x 7/8
31	9020-6194	3.5"	TRIM-LOCK
32	9020-6199	13"	TRIM-LOCK
33	1440-2248	AR	3M ADHESIVE
34	8856-1109	2	FLAT WASHER, 3/8
35	8855-1011	2	LOCKWASHER, 3/8
36	9112-6029	1	HOSE & CABLE SUPPORT
37	8820-1019	2	HEX HD CAPSCREW, 5/16-18 x 7/8
38	8850-1005	2	HEX NUT, 5/16
39	9112-3056	1	AUXILIARY HOSE SHEAVE
40	9108-1326	1	HOSE REEL SUPPORT
41	9020-3040	1	THRUST WASHER
42	8858-1320	1	RETAINING RING EXTENSION
43	8320-1123	3	HEX HD CAPSCREW, 1/2-13 x 1/2
44	9002-7471	3	HARDENED FLAT WASHER
45	8471-7894	2	HOSE ASSY
46	9002-8955	1	CONNECTOR BODY
47	9002-8978	1	CABLE CLAMP
48	7713-3141	1	STAUFF BASE PLATE
49	9112-1139	1	RECEPTACLE BRACKET

** Added part breakdown and see page for 5-button handle.*

OPTIONAL EQUIPMENT
(9108-5050) Cab Enclosure

Original Issue 12-90
Revised 6-24-97

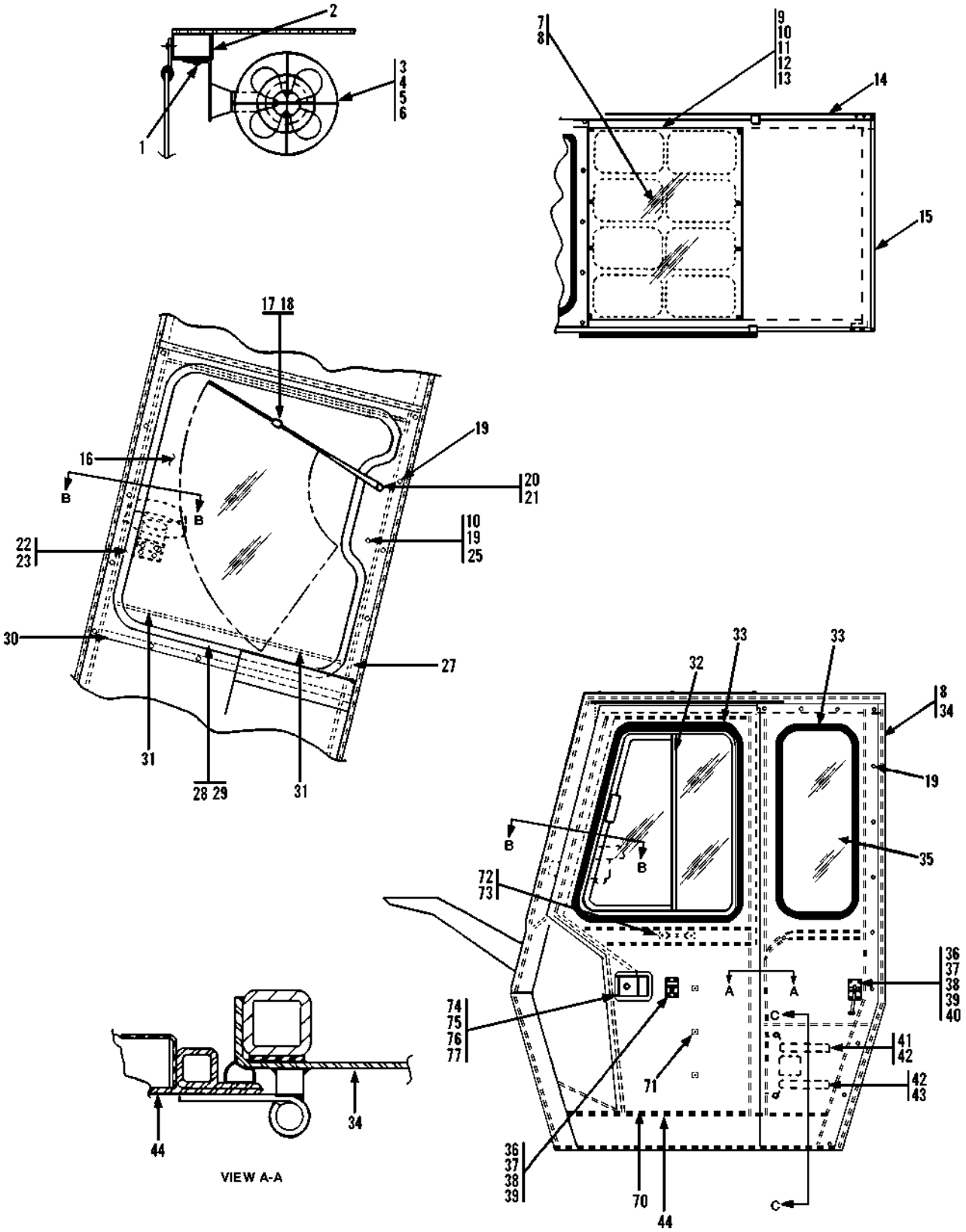

** Corrected part number on item 17.*

OPTIONAL EQUIPMENT
(9108-5050) Cab Enclosure

Original Issue 12-90
Revised 6-24-97

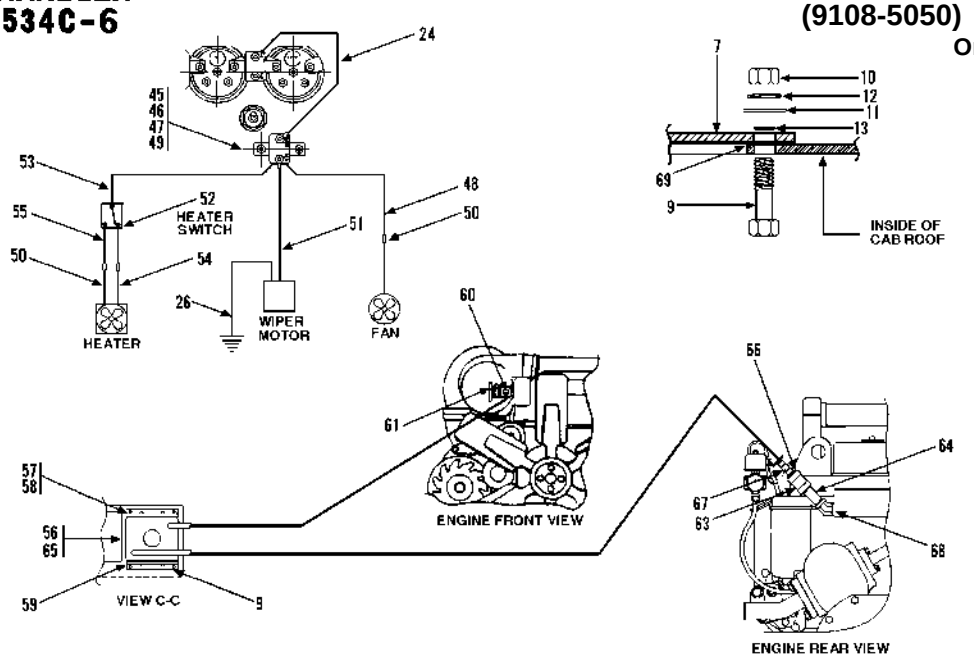

Item	Part No.	Qty.	Description Of Part
	9108-5050	1	CAB ENCLOSURE (includes all items)
1	9002-7319	2	SELF TAPPING SCREW, 1/4-20X1
2	9108-1499	1	MOUNTING ANGLE
3	9020-0680	1	DEFROSTER FAN
4	8821-1510	4	SOCKET HEAD CAPSCREW, #10-32X5/8
5	8850-1613	4	HEX NUT, #10-32
6	8855-1007	4	LOCKWASHER, #10
7		1	TOP WINDOW (see page 2-4 for details)
8	1440-3190	AR	CAULKING
9	8820-1005	14	HEX HD CAPSCREW, 1/4-20X1, GR5
10	8850-1004	11	HEX NUT, 1/4-20
11	8856-1107	10	FLAT WASHER, 1/4
12	8855-1009	10	LOCKWASHER, 1/4
13	8859-1005	10	O-RING
14		1	RIGHT SIDE WINDOW (see page 2-4 for details)
15		1	REAR WINDOW (see page 2-4 for details)
16		1	FRONT WINDOW (see page 2-4 for details)
*17	9103-3465	1	WIPER BLADE 15"
18	9103-3464	1	WINDSHIELD WIPER ARM
19	9002-7319	34	SELF-TAPPING SCREW, 1/2-20X1
20	9020-6023	1	WIPER MOTOR
21	9002-7214	2	BUTTON GROMMET
22	8869-1387	1	SINGLE TUBE CLIP
23	8832-1020	1	TAPPING SCREW, 8-32X1/4
24	9020-0381	1	JUMPER WIRE
25	8820-1003	1	HEX HD CAPSCREW, 1/4-20X3/4, GR5
27	9108-3376	1	EMERGENCY EXIT DECAL
28	9108-3348	AR	CHANNEL MOLDING
29	9108-3392	AR	RELEASE FILLER STRIP
30	9108-1671	1	FRONT WINDOW FRAME
31	9002-9955	1	GROMET
32	9130-3067	1	DOOR SLIDING WINDOW
33	8366-1145	AR	WEATHER STRIP
34	9108-6115	1	LEFT SIDE WINDOW FRAME35
		1	LEFT SIDE WINDOW (see page 2-4 for details)
36	9108-1545	1	DOOR HOLDER

Item	Part No.	Qty.	Description Of Part
37	8830-1193	8	ROUND HD MACHINE SCREW, 10-32X1/2
38	8850-1613	8	HEX NUT, #10-32
39	8855 -1007	8	LOCKWASHER, #10
40	8856-1104	4	FLAT WASHER, #8
41	9020-6169	1	HEATER HOSE
42	8688-3193	4	HOSE CLAMP
43	9020-6170	1	HEATER HOSE
44	9108-5057	1	CAB DOOR (includes 72 thru 77)
45	9108-3260	1	15 AMP CIRCUIT BREAKER
46	8855-4917	2	LOCKWASHER, #10
47	8850-1613	2	HEX NUT, #10-32
48	9108-1680	1	JUMPER WIRE
49	8830-1193	2	ROUND HD MACHINE SCREW, #10-32X1/2
50	8668-3480	3	CRIMP-ON CONNECTOR
51	9108-1675	1	JUMPER WIRE
52	7738-3744	1	HEATER SWITCH
53	9103-1490	1	JUMPER WIRE
54	9020-6134	1	JUMPER WIRE
55	9103-1494	1	JUMPER WIRE
56	9100-3053	1	HEATER DECAL
57	7714-3004	4	WHIZ LOK SCREW
58	7714-3006	4	WHIZ LOK NUT
59	9103-1521	2	HEATER MOUNTING BRACKET
60	7738-3540	1	COOLANT RESTRICTOR ORIFICE
61	9108-3155	1	TRUCK VALVE
63	8871-1213	1	COUPLING, 1/2"
64	8870-1070	1	PIPE NIPPLE, 1/2X2-1/2"
65	9104-3429	1	HEATER
66	8871-1383	1	PIPE BUSHING, 1/2X3/8"
67	2464-1328	1	SHUT-OFF VALVE
68	8871-2034	1	STREET ELBOW, 45 DEGREES, 1/2
69	9020-0755	AR	WEATHER STRIP
70	9108-3378	1	INSULATION PANEL
71	9105-3559	3	PUSH ON INSULATION CAP
72	9020-3840	1	PULL HANDLE (on inside of cab door)
73	8832-1039	2	SELF TAPPING SCREW
74	9108-3263	1	FLUSH LOCK
75	8830-1070	4	RD.HD. MACHINE SCREW, #8-32X1/2
76	8852-1604	4	LOCKNUT, #8-32
77	8856-1104	4	FLAT WASHER, #8

** Corrected part number on item 17.*

OPTIONAL EQUIPMENT
(9114-5050) Cab Enclosure
Starting Serial No. 0288777
Original Issue 8-95
Revised 5-7-97

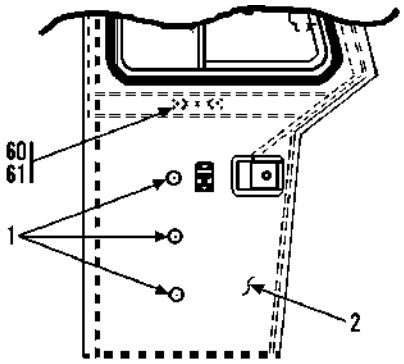

VIEW OF INSIDE OF CAB DOOR

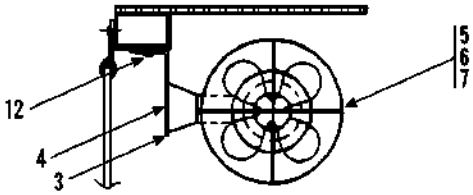

VIEW B-B

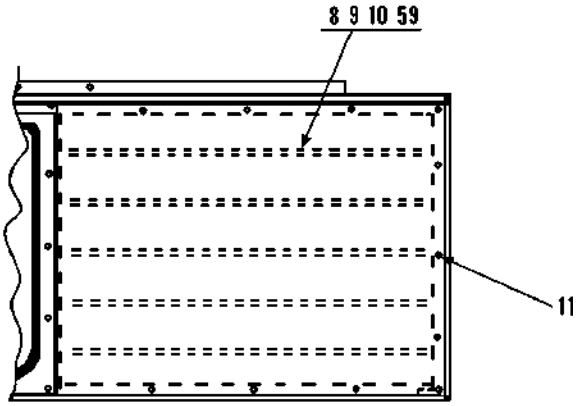

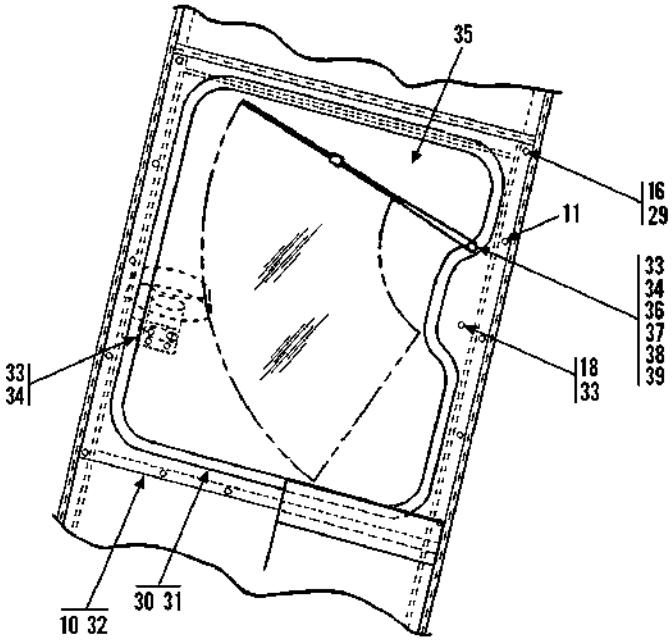

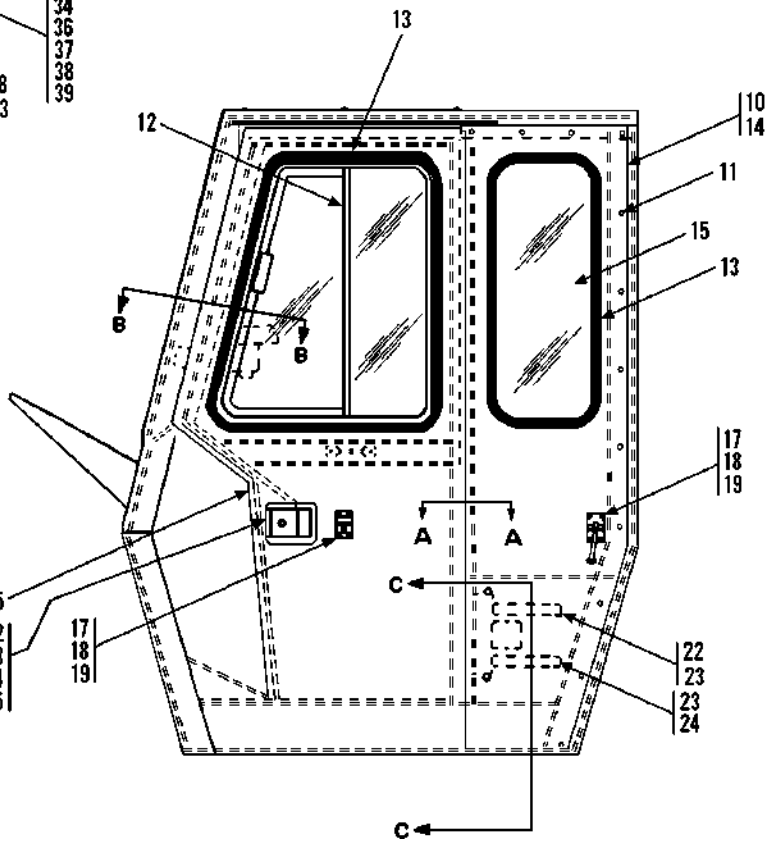

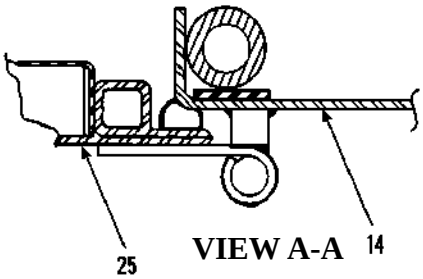

VIEW A-A

** Added items 60 thru 65.*

OPTIONAL EQUIPMENT
(9114-5050) Cab Enclosure

Starting Serial No. 0288777
Original Issue 8-95
Revised 5-7-97

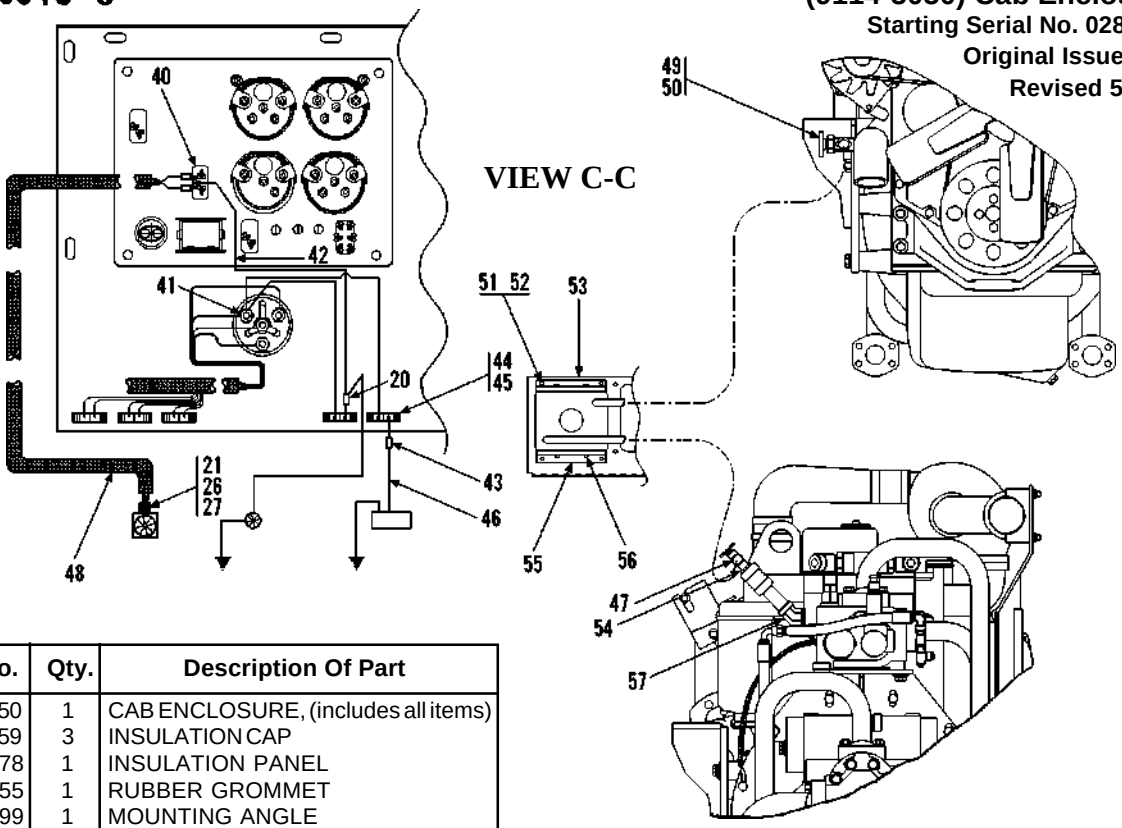

Item	Part No.	Qty.	Description Of Part
	9114-5050	1	CAB ENCLOSURE, (includes all items)
1	9105-3559	3	INSULATION CAP
2	9108-3378	1	INSULATION PANEL
3	9002-9955	1	RUBBER GROMMET
4	9108-1499	1	MOUNTING ANGLE
5	9020-0680	1	DEFROSTER FAN
6	8821-1030	4	HEX HD CAPSCREW, 5/16-18X3-1/2 GR5
7	7714-3017	4	WHIZ-LOK NUT, #10-24
8		Ref	TOP WINDOW, (see page 2-4 for details)
9	9114-3190	AR	GASKA-TAPE
10	1440-3190	AR	VULKEM CAULK
11	9002-7319	43	SELF-TAPPING SCREW, 1/4-20X1
12		Ref	DOOR SLIDING WINDOW, (see page 2-4 for details)
13	8366-1145	14'	WEATHER STRIP
14	9108-6115	2	LEFT SIDE WINDOW FRAME
15		Ref	LEFT SIDE WINDOW, (see page 2-4 for details)
16	8820-1001	5	HEX HD CAPSCREW, 1/4-20X1/2, GR5
17	9108-1545	1	DOOR HOLDER
18	7714-3016	9	WHIZ-LOK SCREW, #10-24X3/4
19	7714-3017	9	HEX NUT, #10-32
20	8348-3078	1	CRIMP ON CONNECTOR
21	8096-3058	1	SHROUD
22	9020-6169	1	HEATER HOSE
23	8668-3193	4	HOSE CLAMP
24	9114-1459	1	HEATER HOSE
25	9108-5057	1	CAB DOOR, (includes 60 thru 65)
26	8096-3069	1	MALE PIN TERMINAL
27	8096-3067	2	CABLE SEAL
29	8856-1107	5	WASHER, 1/4
30	9108-3348	10'	CHANNEL MOULDING
31	9108-3392	10'	RELEASE FILLER STRIP, (locate release cord just below wiper motor with knot located at loose end of cord)
32	9114-1332	1	FRONT WINDOW FRAME
33	9105-3419	3	TY-RAP
34	8368-3181	3	TY-RAP BASE

Item	Part No.	Qty.	Description Of Part
35		Ref	FRONT WINDOW, (see page 2-4 for details)
36	9020-6023	1	WIPER MOTOR
37	9002-7214	2	BUTTON GROMMET
38	9103-3464	1	WINDSHIELD WIPER ARM
39	9103-3465	1	WIPER BLADE, 15"
40	7738-3744	1	HEATER SWITCH
41	8698-3188	1	RING TERMINAL
42	9108-1680	1	JUMPER WIRE
43	8668-3480	1	CRIMP ON CONNECTOR
44	9114-3108	2	FUSE HOLDER
45	7736-3268	2	15 AMP FUSE
46	9114-1374	1	JUMPER WIRE
47	2464-1328	1	SHUT-OFF VALVE
48	9112-3125	1	HEATER HARNESS
49	7738-3540	1	ORIFICE
50	9108-3155	1	TRUCK VALVE
51	7714-3004	4	WHIZ-LOK SCREW
52	7714-3006	4	WHIZ-LOK NUT
53	9104-3429	1	HEATER
54	8871-1383	1	PIPE BUSHING, 1/2X3/8
55	9103-1521	2	HEATER MOUNTING BRACKET
56	8820-1005	4	HEX HD CAPSCREW, 1/4-20X1, GR5
57	8871-2034	1	STREET ELBOW, 1/2X45
58	9108-3376	1	EMERGENCY EXIT DECAL, (not shown)(located on corner post of cab next to emergency release cord)
59	9114-3220	78'	TRIM - LOK
*60	9020-3840	1	PULL HANDLE, (on inside of door)
*61	8832-1039	2	SELF TAPPING SCREW
*62	9108-3263	1	FLUSH LOCK
*63	8830-1070	4	ROUND HD MACHINE SCREW, #8-32X1/2"
*64	8852-1604	4	LOCKNUT, #8-32
*65	8856-1104	4	FLAT WASHER, #8

** Added items 60 thru 65.*

OPTIONAL EQUIPMENT
(9114-5096) Cab Enclosure

(532C-6/534C-6) Starting Serial No. 0488238
(534C-6 Turbo) Starting Serial No. 0388238
Original Issue 10-97
Revised 9-13-06

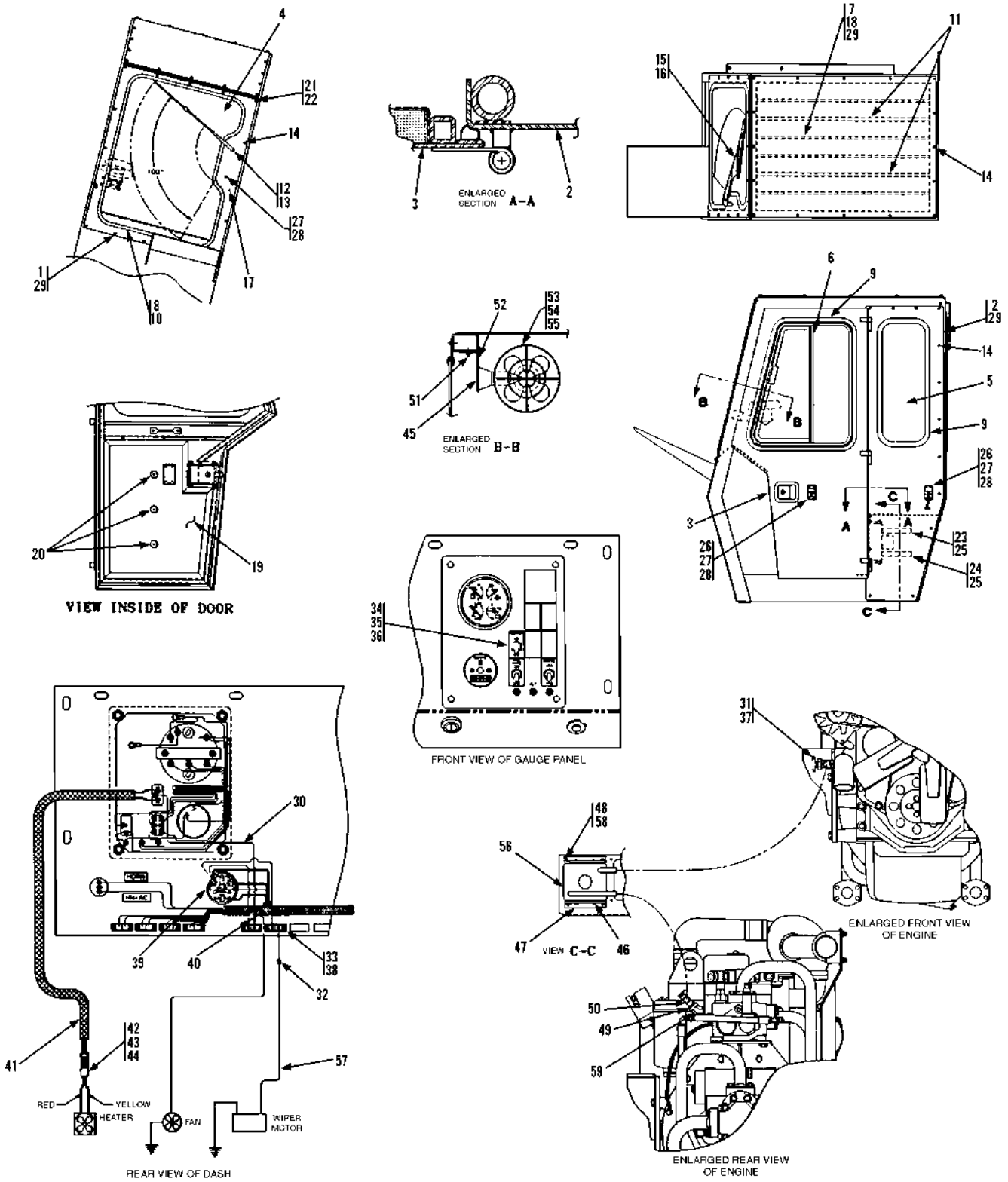

OPTIONAL EQUIPMENT
(9114-5096) Cab Enclosure

(532C-6/534C-6) Starting Serial No. 0488238
(534C-6 Turbo) Starting Serial No. 0388238
Original Issue 10-97
Revised 9-13-06

Item	Part No.	Qty.	Description Of Part
	9114-5096	1	CAB ENCLOSURE (includes all items)
1	9114-1332	1	FRONT WINDOW FRAME
2	9108-6115	1	LEFT SIDE WINDOW FRAME
3	9108-5057	1	CAB DOOR ASSY
4	9108-3450	1	FRONT WINDOW
5	9108-3434	1	LEFT SIDE WINDOW
6	9130-3067	1	DOOR SLIDING WINDOW
7	9114-3090	1	TOP WINDOW
8	9108-3392	10'	RELEASE FILLER STRIP
9	8366-1145	14'	WEATHER STRIP
10	9108-3348	10'	CHANNEL MOLDING
11	9114-3220	78"	TRIM-LOK
12	9020-6023	1	WIPER MOTOR
13	9002-7214	2	BUTTON GROMMET
14	9002-7319	41	SELF TAPPING SCREW, 1/4-20X1
15	9103-3464	1	WINDSHIELD WIPER ARM
16	9103-3465	1	15" WIPER BLADE
17	9108-3376	1	EMERGENCY EXIT DECAL
18	9114-3190	12.2'	GASKA-TAPE
19	9108-3378	1	INSULATION PANEL
20	9105-3559	3	PUSH ON INSULATION CAP
21	8820-1001	5	HEX HD CAPSCREW, 1/4-20X1/2, GR5
22	8856-1107	5	FLAT WASHER, 1/4
23	9020-6169	1	HEATER HOSE
24	9114-1459	1	HEATER HOSE
25	8668-3193	4	HOSE CLAMP
26	9108-1545	1	DOOR HOLDER
27	7714-3016	9	WHIZ LOCK SCREW, #10-24X3/4
28	7714-3017	9	WHIZ LOCK NUT, #10-24
29	1440-3190	AR	VULKEM CAULK

Item	Part No.	Qty.	Description Of Part
30	9108-1680	1	JUMPER WIRE
31	9108-3155	1	TRUCK VALVE
32	8668-3480	1	CRIMP-ON CONNECTOR
33	9114-3108	2	FUSE HOLDER
34	9114-3361	2	HEATER DECAL
35	7738-3470	2	BOOT
36	7738-3744	2	TOGGLE SWITCH
37	7738-3540	1	COOLANT RESTRICTOR ORIFICE
38	7736-3268	2	15-AMP FUSE
39	8698-3188	1	RING TERMINAL
40	8348-3078	1	CRIMP-ON CONNECTOR
41	9112-3125	1	HEATER HARNESS
42	8096-3058	1	SHROUD
43	8096-3069	2	MALE PIN TERMINAL
44	8096-3067	2	CABLE SEAL
45	9002-9955	1	RUBBER GROMMET
46	8820-1005	4	HEX HD CAPSCREW, 1/4-20X1, GR5
47	9103-1521	2	HEATER MTG. BRACKET
48	7714-3006	4	WHIZ LOCK NUT
49	8871-1383	1	REDUCING BUSHING, 1/2X3/8
50	2464-1328	1	SHUT OFF VALVE
51	9002-7319	2	SELF TAPPING SCREW, 1/4-20X1
52	9108-1499	1	MOUNTING ANGLE
53	9020-0680	1	FAN
54	8821-1030	4	SOCKET HD CAPSCREW, #10-24X3/4, GR8
55	7714-3017	4	WHIZ LOCK NUT, #10-24
56	9104-3429	1	HEATER
57	9114-1374	1	JUMPER WIRE
58	7714-3004	4	WHIZ LOCK SCREW
59	8871-2034	1	STREET ELBOW 45 DEGREES, 1/2

** Added serial number for 534C-6 Turbo.*

OPTIONAL EQUIPMENT
(9108-5058) 48" Slope Piler Carriage

Original Issue 12-91
Revised 6-20-06

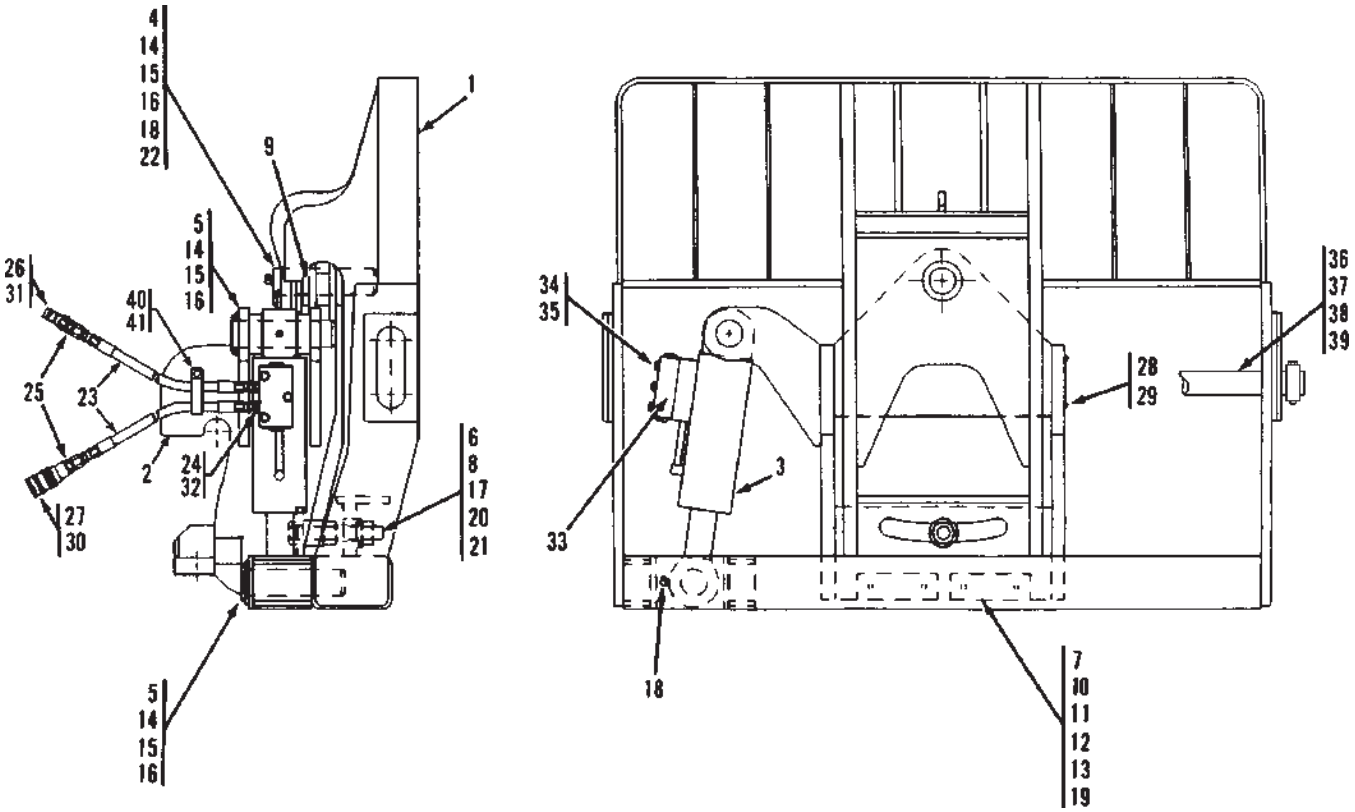

Item	Part No.	Qty.	Description Of Part
	9108-5058	Ref	SLOPE PILER CARRIAGE, (includes all items)
	9112-3077	1	CAPACITY DECAL (not shown)
1	9108-6121	1	CARRIAGE WELDMENT, 48"
2	9108-6122	1	ADAPTER WELDMENT
3		Ref	SWAY CYLINDER, (see page 13-10 for details)
4	9108-3248	1	BUSHING
* 5	3423263	2	PIN
6	9020-4007	1	TUBE
7	9103-3186	2	BEARING PAD
8	9108-1577	1	TAP BOLT
9	9108-1594	1	THRUST WASHER
*10	9020-5870	AR	SHIM
11	9103-1236	2	SPACER
*12	8820-1535	4	HEX HD CAPSCREW, 3/8-24X1-1/4, GR5
*13	8820-1534	4	HEX HD CAPSCREW, 3/8-24X1, GR5
14	9108-1313	3	KEEPER PLATE
15	8820-1065	6	HEX HD CAPSCREW, 1/2-13X1, GR5
16	8855-1013	6	LOCKWASHER, 1/2
17	8852-1016	1	HEX LOCKNUT, 1-8
*18	8867-1022	2	LUBE FITTING, 90 DEGREES, 1/8
19	8856-1109	4	FLAT WASHER, 3/8
20	8850-1016	1	HEX NUT, 1-8
21	0510-1441	1	WASHER, 1-1/16
22	9108-1622	1	PIN
23	8471-6434	2	HOSE ASSY
24	8366-1316	2	CONNECTOR

Item	Part No.	Qty.	Description Of Part
*25	8866-1010	2	CONNECTOR, **(Before S/N 2005283-01)**
	8866-2018	2	CONNECTOR, **(S/N 2005283-01 & After)**
*26	9116-3138	1	MALE QUICK DISCONNECT, **(Before S/N 2005283-01)**
	9140-3414	1	MALE QUICK DISCONNECT, **(S/N 2005283-01 & After)**
*27	9116-3139	1	FEMALE QUICK DISCONNECT, **(Before S/N 2005283-01)**
	9140-3413	1	FEMALE QUICK DISCONNECT, **(S/N 2005283-01 & After)**
28	8834-1022	4	DRIVE SCREW, #10X3/8
29	9015-3001	1	SERIAL NUMBER PLATE
30	9104-3125	1	DUST PLUG
31	9104-3126	1	DUST CAP
32	8866-2105	2	ELBOW, 90 DEGREES, (swivel nut)
33		Ref	DUAL P.O. CHECK VALVE, (see page 13-11 for details)
34	8820-1040	3	HEX HD CAPSCREW, 3/8-16X2-1/4, GR5
35	8855-1011	3	LOCKWASHER, 3/8
*36	9045-1058	1	FORK PIN
*37	9020-0003	2	COLLAR
*38	8820-1105	2	HEX HD CAPSCREW, 5/8-11X4, GR5
*39	8852-1310	2	LOCKNUT, 5/8-11
*40	8452-1062	1	SUPPORT CLAMP
*41	7714-3015	1	WHIZ-LOK NUT, 3/8-16

** Revised illustration & parts list.*

OPTIONAL EQUIPMENT
(9108-3286) Sway Cylinder
Starting Serial No. 0188002 thru 0388190

Original Issue 12-91
Revised 1-19-98

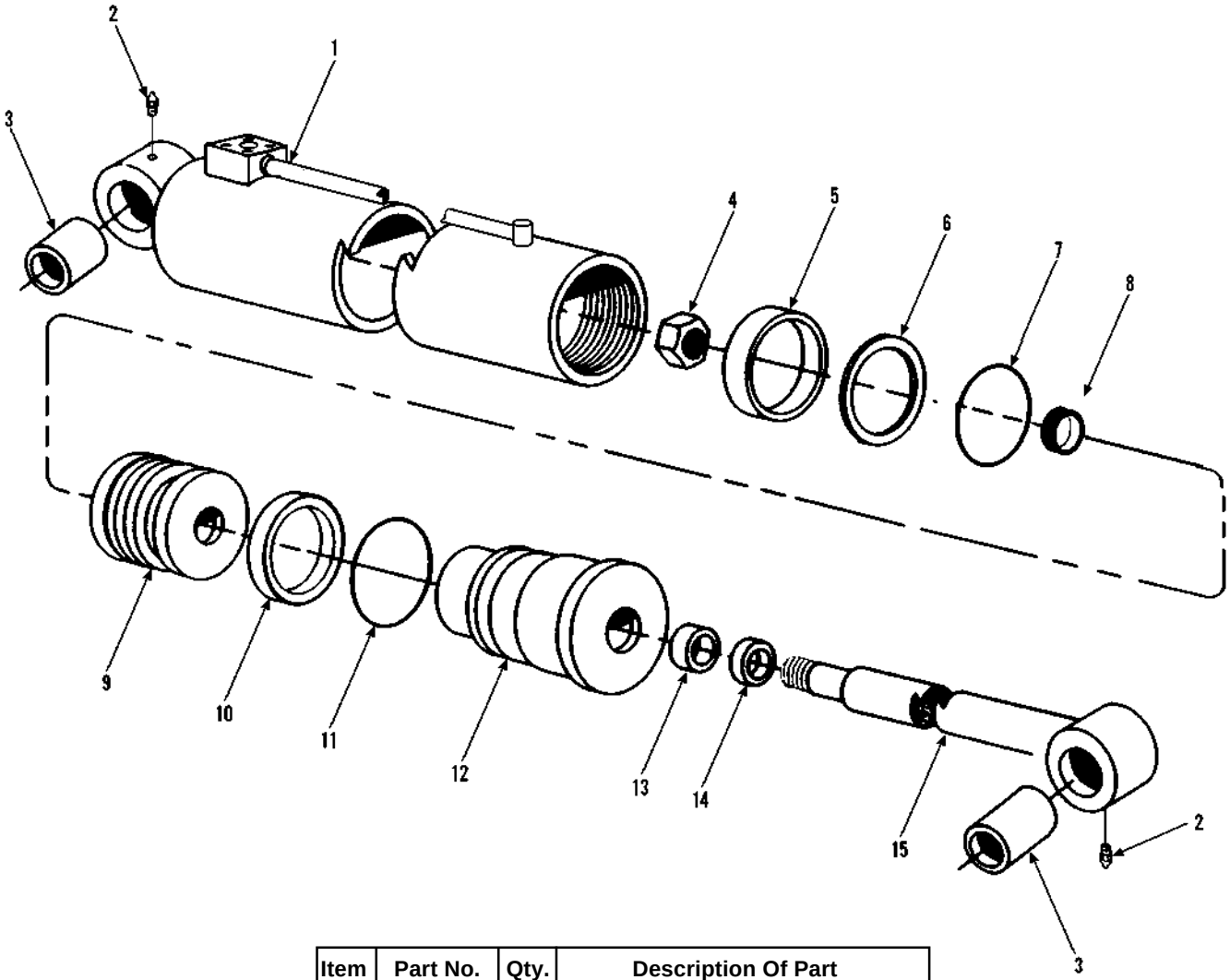

Item	Part No.	Qty.	Description Of Part
	9108-3286	1	SWAY CYLINDER ASSY (includes all items)
	9108-4189	Ref	SEAL KIT (includes items 5, 6, 7, 8, 10, 11, 13, & 14)
1	9108-4185	1	TUBE ASSY
2	8867-1033	2	LUBE FITTING, STRAIGHT, 1/4-28
3	9108-4176	2	BUSHING
4	9108-4184	1	NUT
5	9108-4219	1	WEAR RING
6	9108-4220	1	SEAL
7	9108-4221	1	O-RING
8	9108-4222	1	O-RING
9	9108-4186	1	PISTON
10	9108-4223	1	BACK-UP RING
11	9108-4224	1	O-RING
12	9108-4188	1	GLAND
13	9108-4225	1	SEAL
14	9108-4226	1	WIPER
15	9108-4187	1	ROD ASSY

* *Revised starting serial number .*

OPTIONAL EQUIPMENT
(9108-3471) Sway Cylinder
Starting Serial No. 0388191

Original Issue 1-98
Revised 6-27-07

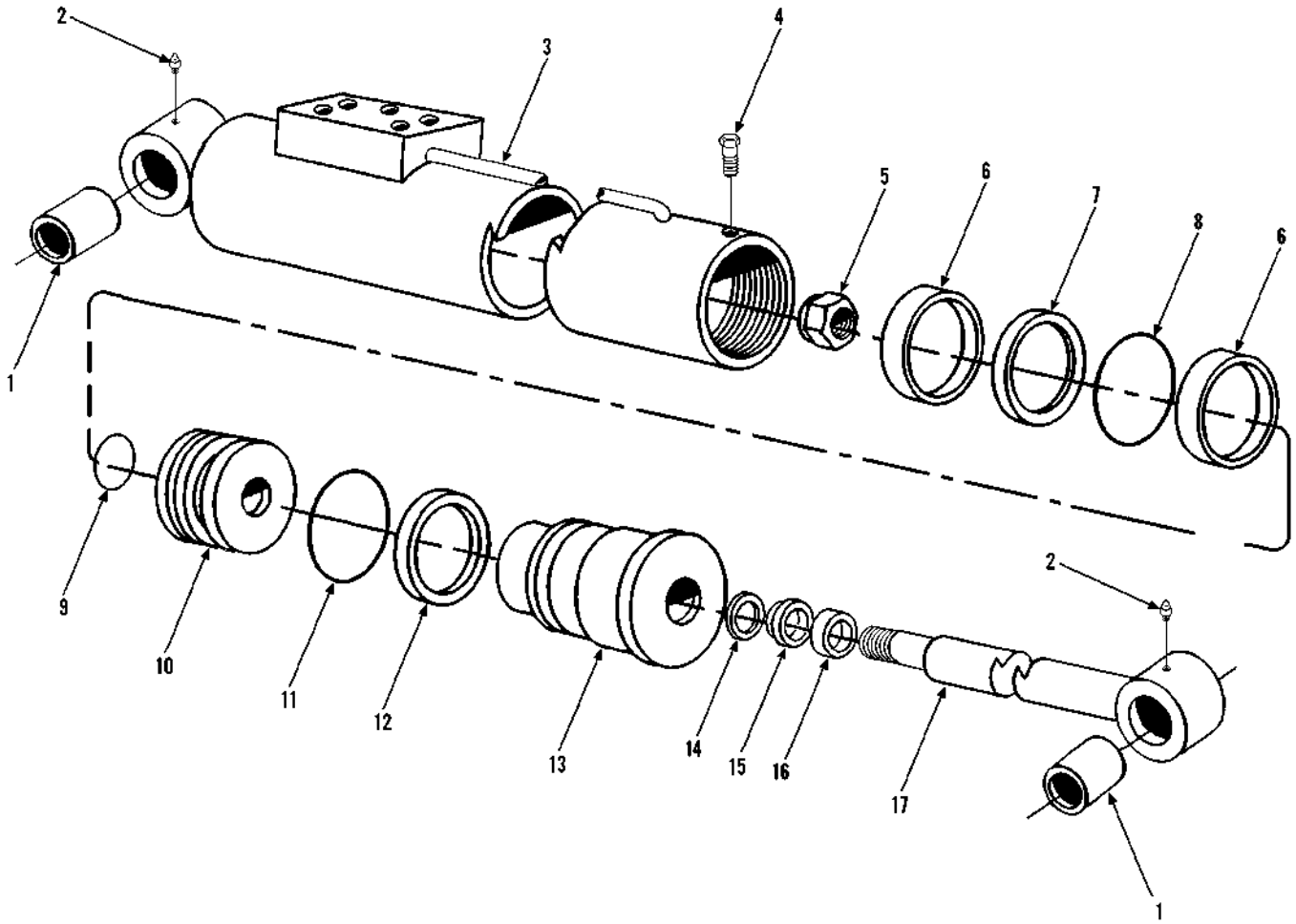

Item	Part No.	Qty.	Description Of Part
	9108-3471	1	SLOPE PILER CARRIAGE SWAY CYLINDER ASSY (includes all items)
	9108-4308	1	SEAL KIT (includes items 6 thru 9, 11, 12, & 14 thru 16)
* 1	9140-4352	2	BUSHING
2	9114-4128	2	GREASE FITTING
3	9112-4083	1	CASE ASSY
4	9114-4017	1	CAPSCREW, #8X32X.375
5	9103-4156	1	LOCKNUT (lubricate & torque to 350-400 ft.lbs.)
6		2	WEAR RING
7		1	PISTON SEAL
8		1	O-RING

Item	Part No.	Qty.	Description Of Part
9		1	O-RING
10	9112-4084	1	PISTON
11		1	O-RING
12		1	BACK-UP RING
13	9112-4085	1	CYLINDER HEAD
14		1	STEP SEAL
15		1	U-CUP
16		1	WIPER
17	9112-4086	1	ROD ASSY

NOTE: ONLY ITEMS WITH PART NUMBERS ARE AVAILABLE FOR SERVICE.

** Revised part number on item 1 .*

OPTIONAL EQUIPMENT
(9108-3262) Dual P.O. Check Valve

Original Issue 12-91
Revised 11-29-99

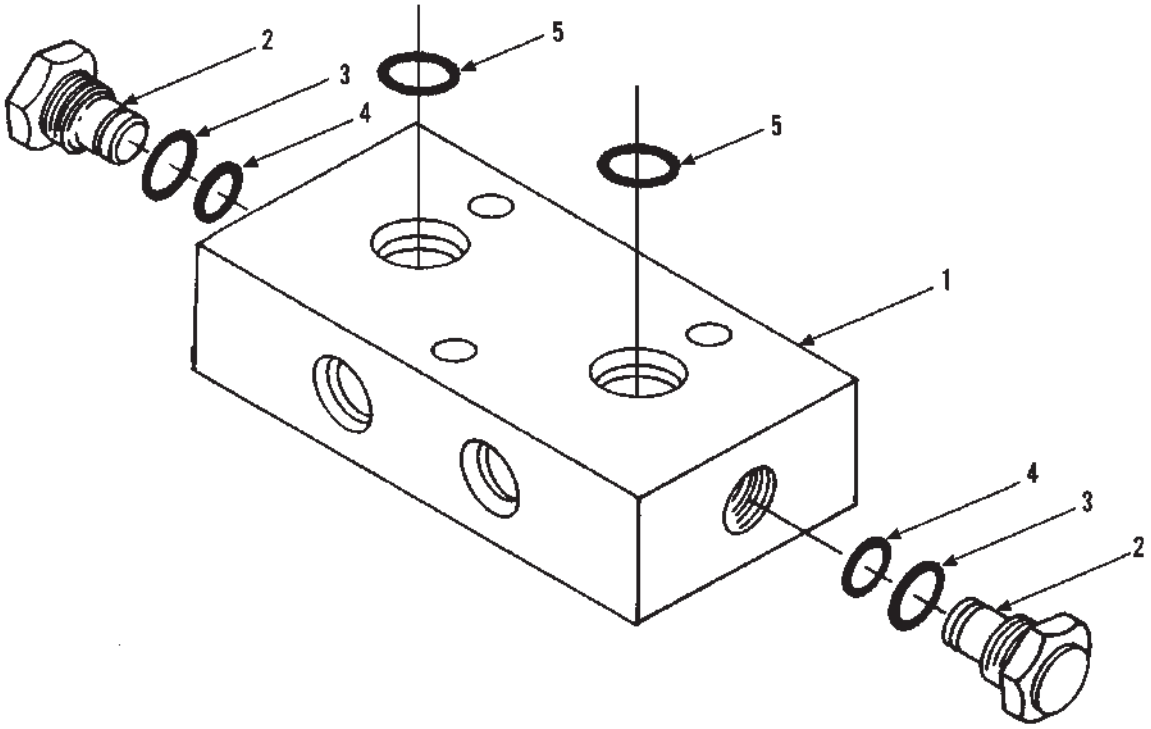

Item	Part No.	Qty.	Description Of Part
	9108-3262	1	DUAL P.O. CHECK VALVE ASSY (includes items 1 thru 4)
	9104-4002	Ref	SEAL KIT (includes items 3 & 4)
1		1	BODY
2	7713-3248	2	CHECK VALVE (Includes items 3 & 4)
3	9108-4227	2	O-RING
4	9108-4228	2	O-RING
* 5	8859-1009	2	O-RING
			NOTE: ONLY ITEMS WITH PART NUMBERS ARE AVAILABLE FOR SERVICE

** Corrected part number on item 5.*

OPTIONAL EQUIPMENT
(9045-5035) & (9045-5037) 6 Ft. Mast Assemblies

Original Issue 12-91
Revised 7-06-06

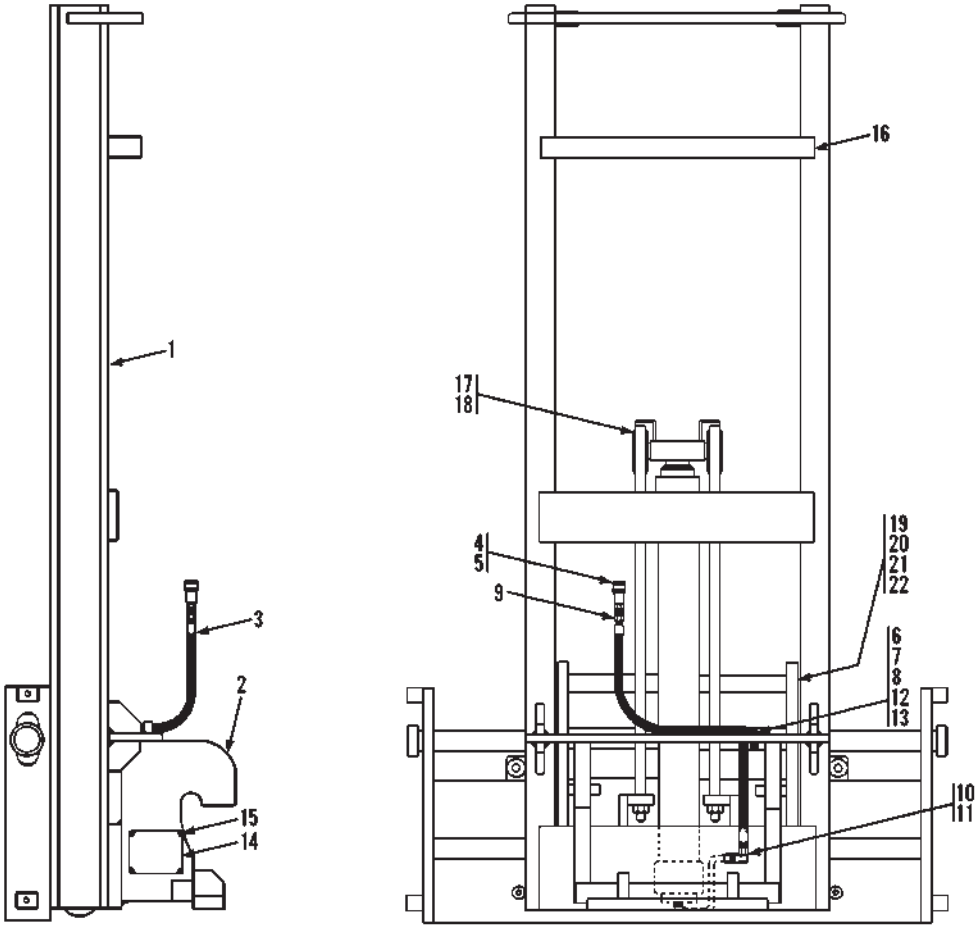

Item	Part No.	Qty.	Description Of Part
	9045-5035	1	6 FT. MAST ASSY, (48" carriage), (includes all items)
	9045-5037	1	6 FT. MAST ASSY, (66" carriage), (includes all items)
	9103-3400	1	532C/534C-6 CAPACITY CHART, (located in cab)
1	9045-3031	1	CARRIAGE WELDMENT - 48"
	9045-3032	1	CARRIAGE WELDMENT - 66"
2	9045-6002	1	ADAPTER WELDMENT
3	8471-7640	1	HOSE ASSY
4	9116-3138	1	MALE HYDRAULIC COUPLING, **(Before S/N 2005283-01)**
	9140-3414	1	MALE HYDRAULIC COUPLING, **(S/N 2005283-01 & After)**
5	9104-3126	1	DUST CAP
6	2443-1386	2	CLAMP
7	8820-1037	2	HEX HD CAPSCREW, 3/8-16X1-1/2, GR5
8	8856-1004	2	FLAT WASHER, 3/8

Item	Part No.	Qty.	Description Of Part
9	8866-1013	1	MALE CONNECTOR, 1/2X1/2 TUBE, **(Before S/N 2005283-01)**
9	8866-2006	1	CONNECTOR, (includes 8859-1205 o-ring), **(S/N 2005283-01 & After)**
10	8866-1016	1	MALE CONNECTOR, 5/8X1/2 TUBE
11	8866-1180	1	FEMALE ELBOW, 90 DEGREES, 1/2X1/2 TUBE
12	8850-1006	2	HEX NUT, 3/8-16
13	8855-1011	2	LOCKWASHER, 3/8
14	9015-3001	1	SERIAL NO. PLATE
15	8834-1022	4	DRIVE SCREW, #10X3/8
16	9045-1039	1	STOP TUBE
17	9103-4372	2	RETAINING RING
18	9103-4373	2	CHAIN ROLLER
19	9103-4374	6	LOAD ROLLER, (inside carriage frame)
20	9103-4375	AR	SHIM
21	9103-4376	4	SIDE THRUST ROLLER, (small outside roller)
22	9103-4377	2	SCREW

ER 46361, 49939 - LK

** Revised illustration & parts list.*

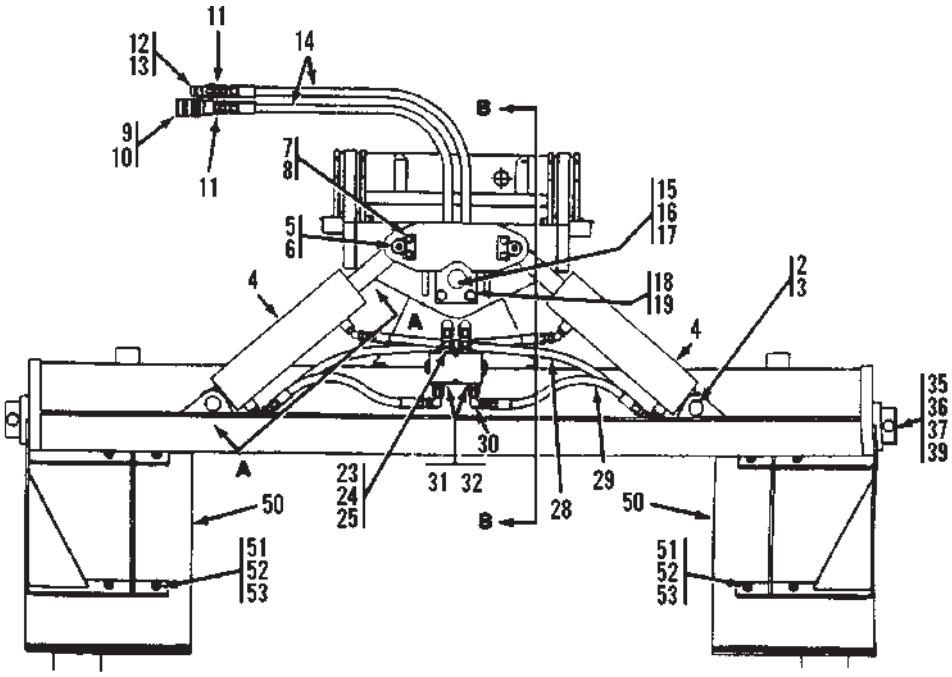

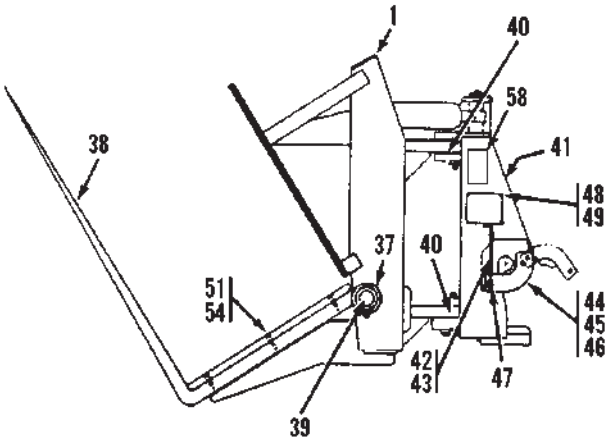

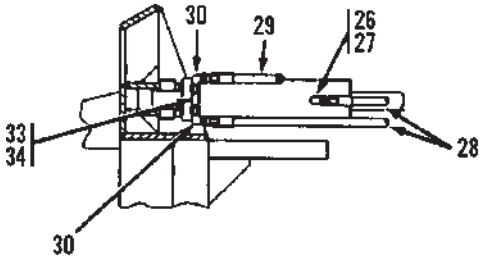

SECTION A-A

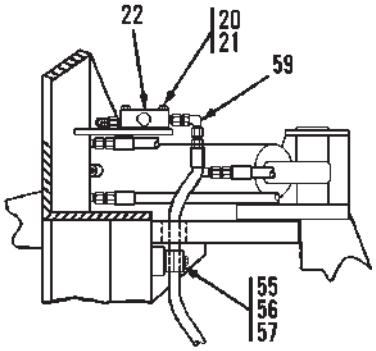

SECTION B-B

OPTIONAL EQUIPMENT
(9055-5013) 100º Drywall Swing Fork Assembly

Original Issue 12-91
Revised 7-13-06

Item	Part No.	Qty.	Description Of Part
	9055-5013	1	100 DEGREE DRYWALL SWING FORK ASSY, (includes all items)
1	9055-6004	1	DRYWALL CARRIAGE WELDMENT
2	9104-1326	2	PIVOT PIN
3	8858-1136	4	EXTERNAL RETAINING RING
4		Ref	HYDRAULIC CYLINDER ASSY, (see page 13-14 for details)
5	9104-1324	2	PIVOT PIN
6	8867-1008	2	LUBE FITTING, STRAIGHT, 1/4-28
7	9141-1073	2	LOCKING PLATE
8	8320-1024	4	HEX HD CAPSCREW, 3/8-16X1, GR8
9	9104-3125	1	DUST CAP
10	9116-3139	1	HYDRAULIC COUPLER, FEMALE, **(Before S/N 2005283-01)**
	9140-3413	1	HYDRAULIC COUPLER, FEMALE, **(S/N 2005283-01 & After)**
11	8866-1013	2	MALE CONNECTOR, 1/2X1/2 TUBE, **(Before S/N 2005283-01)**
	8866-2006	2	CONNECTOR, (includes 8859-1205 o-ring), **(S/N 2005283-01 & After)**
12	9104-3126	1	DUST CAP
13	9116-3138	1	HYDRAULIC COUPLER, MALE, **(Before S/N 2005283-01)**
	9140-3414	1	HYDRAULIC COUPLER, MALE, **(S/N 2005283-01 & After)**
14	8471-8067	2	HOSE ASSY
15	9104-1325	2	PIVOT PIN
16	9104-1327	2	BUSHING
17	8867-1022	2	LUBE FITTING, 90 DEGREES, 1/8
18	9104-1322	2	LOCKING PLATE
19	8320-1026	4	HEX HD CAPSCREW, 1/2-13X1-1/2, GR8
20	8820-1008	2	HEX HD CAPSCREW, 1/4-20X1-3/4, GR5
21	8856-1002	2	FLAT WASHER, 1/4
22	9104-3186	1	DOUBLE PILOT CHECK VALVE
23	9104-1361	2	FITTING
24	9104-1362	2	ORIFICE FITTING
25	8859-1205	2	O-RING
26	8866-2084	2	ELBOW, 45 DEGREES, (includes item 27)
27	8859-1204	2	O-RING
28	9020-4097	2	HOSE ASSY
29	7713-3201	2	HOSE ASSY
30	8866-2105	6	ELBOW, 90 DEGREES, (swivel nut)
31	8866-2018	2	CONNECTOR, (includes item 32)
32	8859-1205	2	O-RING
33	8866-2152	2	BRANCH TEE, (includes item 34)
34	8859-1204	2	O-RING
35	8820-1105	4	HEX HD CAPSCREW, 5/8-11X4, GR5
36	8852-1310	4	HEX LOCKNUT, 5/8-11
37	9020-0003	4	COLLAR
38	9045-3013	2	DRYWALL FORK
39	9045-1020	2	FORK PIN
40	9104-1356	6	SPACER
41	9104-6062	1	PIVOT WELDMENT
42	9103-3038	1	CHAIN, 24"
43	9103-3039	2	CHAIN CONNECTION
44	8863-1449	2	ROLL PIN, 1/8X1-1/2
45	9114-1350	2	PIN
46	9114-6053	1	SUPPORT BRACKET, L.H.
	9114-6054	1	SUPPORT BRACKET, R.H.
47	9104-3221	2	DETENT PIN
48	9015-3001	1	SERIAL NO. PLATE
49	8834-1022	4	DRIVE SCREW, #10X3/8
50	9055-3012	2	SIDE DRYWALL GUARD
51	8824-1053	14	SOCKET FLAT HD CAPSCREW, 3/8-16X1-1/2
52	8855-1011	8	LOCKWASHER, 3/8
53	8850-1006	8	HEX NUT, 3/8-16
54	9055-3013	2	BOTTOM DRYWALL GUARD
55	9108-3249	1	CLAMP SET
56	7713-3140	1	COVER PLATE
57	7713-3177	1	HEX HD CAPSCREW, 5/16-18X1-3/8
58	9114-3282	2	PINCH POINT DECAL
59	8866-2106	2	ELBOW, 90 DEGREES, (swivel nut)

** Revised illustration & parts list.*

OPTIONAL EQUIPMENT
* (9103-3366) Cylinder Assembly

Original Issue 12-91
Revised 4-29-96

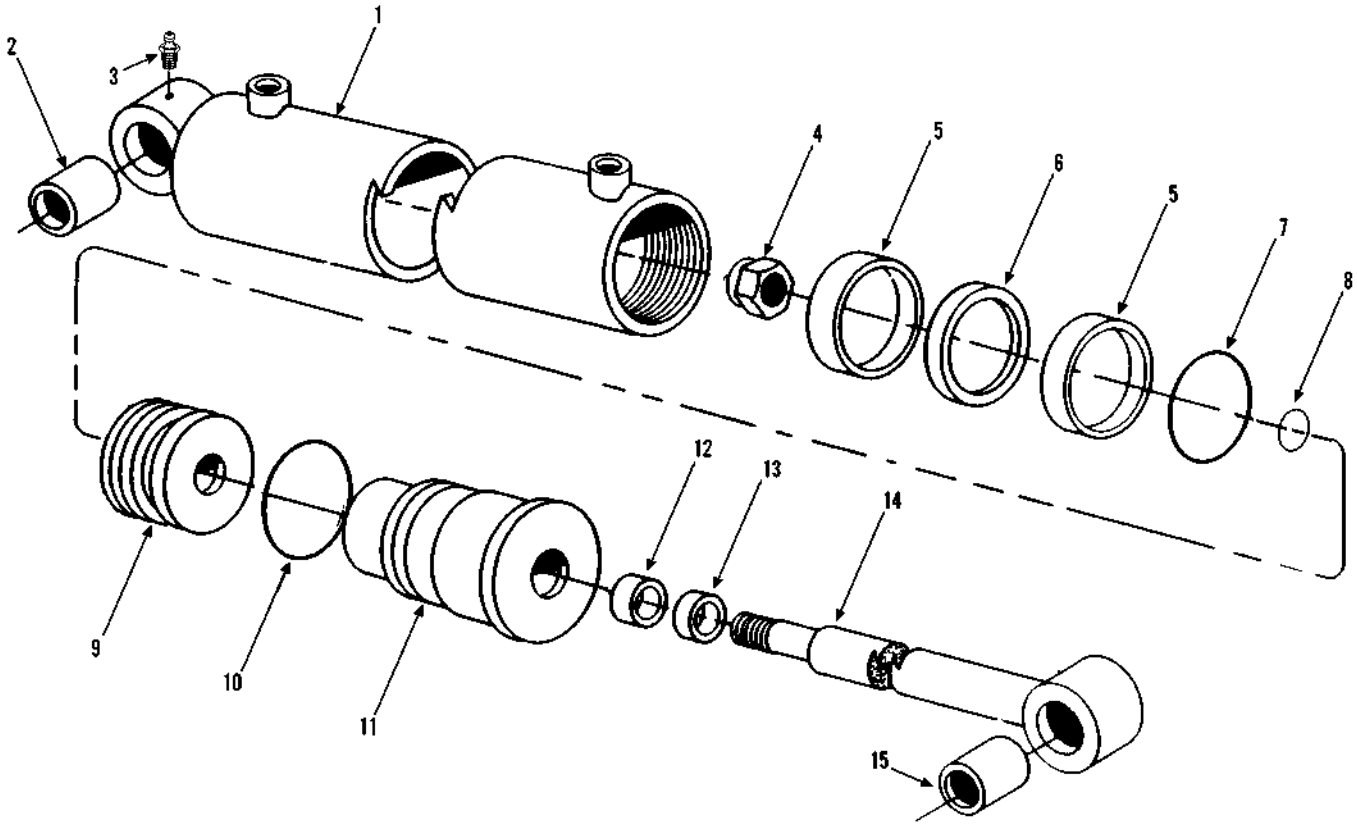

Item	Part No.	Qty.	Description Of Part
*	9103-3366	2	CYLINDER ASSY (includes all items)
*	9103-4301	1	SEAL KIT (includes items 5, 6, 7, 8, 10, 12, & 13)
1	9103-4302	1	TUBE ASSY
2	9108-4194	1	BUSHING
3	8867-1033	1	LUBE FITTING - STRAIGHT, 1/4-28
4	9103-4303	1	LOCKNUT (torque to 235 ft.lbs.)
5	9104-4463	2	WEAR RING
6	9104-4464	1	SEAL
7	9104-4465	1	O-RING
8	9104-4466	1	O-RING
9	9103-4304	1	PISTON
10	9104-4467	1	O-RING
11	9103-4305	1	GLAND
12	9104-4468	1	SEAL
13	9104-4469	1	WIPER
14	9103-4306	1	ROD ASSY
15	9104-4470	1	BUSHING

** Changed part number in upper right, also for cylinder & seal kit.*

OPTIONAL EQUIPMENT
(9045-3034) Cylinder Assembly
Original Issue 7-06

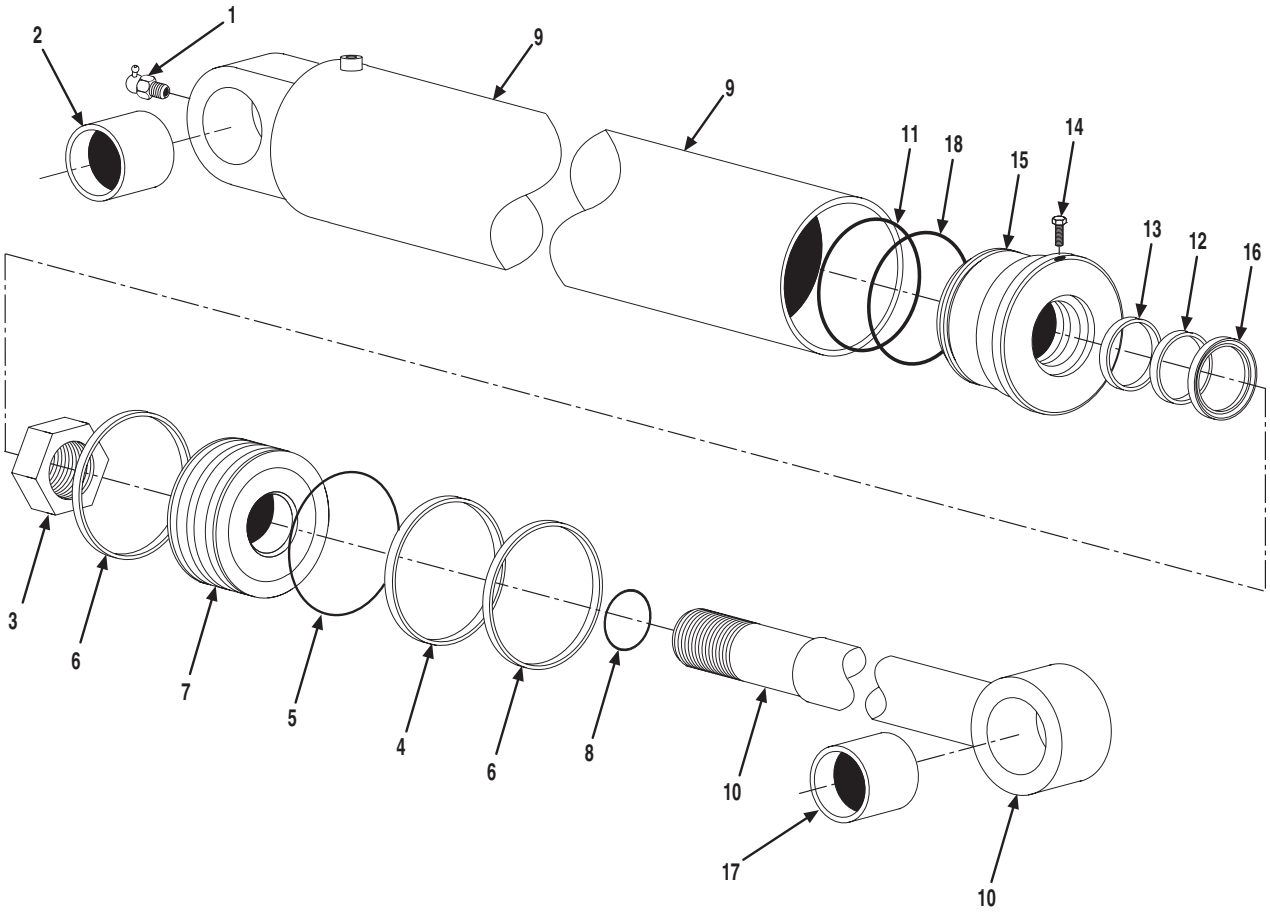

Item	Part No.	Qty.	Description Of Part
	9045-3034	1	CYLINDER ASSY, (includes all items)
	9114-4006	1	SEAL KIT, (includes items 4 thru 6, 8, 11 thru 13, 16 & 18)
1	9114-4125	1	GREASE FITTING
2	9103-4157	1	BUSHING
3	9114-4038	1	LOCKNUT
4	9116-4020	1	PISTON SEAL
5	9116-4021	1	O-RING
6	9116-4019	2	WEAR RING
7	9114-4039	1	PISTON
8	9116-4022	1	O-RING
9	9103-4435	1	BARREL
10	9103-4436	1	PISTON ROD
11	9116-4024	1	BACK-UP RING
12	9120-4468	1	U-CUP
13	9116-4025	1	STEP SEAL
14	9112-4096	1	SELF TAPPING SCREW
15	9114-4040	1	CYLINDER HEAD
16	9120-4469	1	WIPER
17	9112-4087	1	BUSHING
18	9103-4437	1	O-RING
			NOTE: ONLY ITEMS WITH PART NUMBERS ARE AVAILABLE FOR SERVICE.

OPTIONAL EQUIPMENT
(9045-5044) 100º Swing Fork Assembly
Original Issue 12-91
Revised 7-10-06

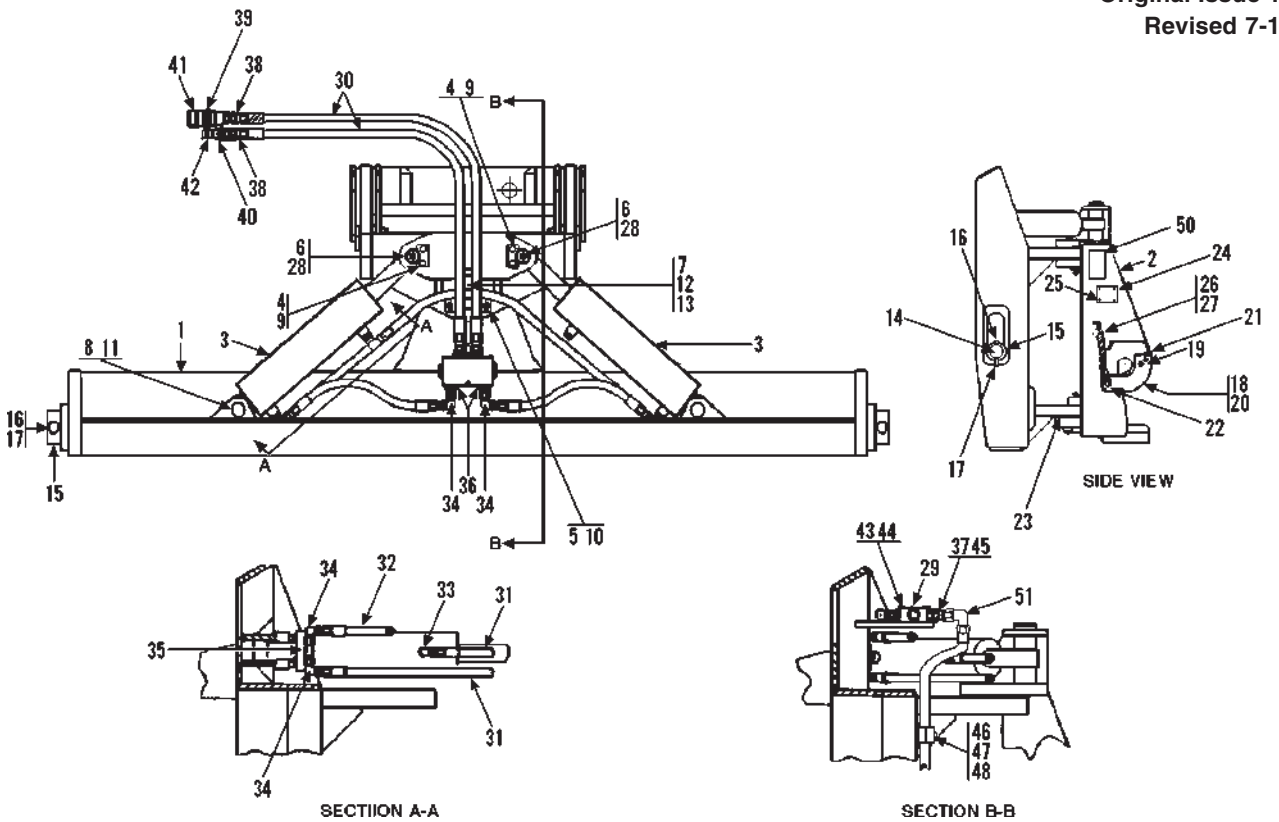

Item	Part No.	Qty.	Description Of Part
	9045-5044	Ref	100 DEGREE SWING FORK ASSY, (includes all items)
1	9104-6061	1	CARRIAGE WELDMENT
2	9104-6062	1	PIVOT PIN
3		Ref	CYLINDER ASSY, (see page 13-14 for details)
4	9104-1322	2	LOCKING PLATE
5	9141-1073	2	LOCKING PLATE
6	9104-1324	2	PIVOT PIN
7	9104-1325	2	PIVOT PIN
8	9104-1326	2	PIVOT PIN
9	8320-1024	4	HEX HD CAPSCREW, 3/8-16X1, GR8
10	8320-1026	4	HEX HD CAPSCREW, 1/2-13X1-1/2, GR8
11	8858-1136	4	SNAP RING
12	8867-1022	2	LUBE FITTING, 90 DEGREES, 1/8
13	9104-1327	2	BUSHING
14	9055-1013	1	FORK PIN
15	9020-0003	2	COLLAR
16	8820-1105	2	HEX HD CASCREW, 5/8-11X4, GR5
17	8852-1310	2	HEX LOCKNUT, 5/8-11
18	9114-6053	1	L.H. SUPPORT BRACKET
19	9114-1350	2	PIN
20	9114-6054	1	R.H. SUPPORT BRACKET
21	8863-1449	2	ROLL PIN, 1/8X1-1/2
22	9104-3221	2	DETENT PIN
23	9104-1356	6	SPACER
24	9015-3001	1	SERIAL NUMBER PLATE
25	8834-1022	4	DRIVE SCREW, #10X3/8
26	9103-3039	2	CHAIN CONNECTION
27	9103-3038	24"	CHAIN
28	8867-1008	2	LUBE FITTING, STRAIGHT, 1/4-28
29	9104-3186	1	DOUBLE PILOT CHECK VALVE
30	8471-8067	2	HOSE ASSY
31	9020-4097	2	HOSE ASSY

Item	Part No.	Qty.	Description Of Part
32	7713-3201	2	HOSE ASSY
33	8866-2084	2	ELBOW, 45 DEGREES, (includes o-ring)
	8859-1204	2	O-RING
34	8866-2105	6	ELBOW, 90 DEGREES, (swivel nut)
35	8866-2152	2	BRANCH TEE, (includes o-ring)
	8859-1204	2	O-RING
36	8866-2018	2	CONNECTOR, (includes o-ring)
	8859-1205	2	O-RING
37	9104-1361	2	FITTING
38	8866-1013	2	MALE CONNECTOR, 1/2X1/2 TUBE, **(Before S/N 2005283-01)**
	8866-2006	2	CONNECTOR, (includes 8859-1205 o-ring), **(S/N 2005283-01 & After)**
39	9116-3139	1	FEMALE QUICK DISCONNECT, **(Before S/N 2005283-01)**
	9140-3413	1	FEMALE QUICK DISCONNECT, **(S/N 2005283-01 & After)**
40	9116-3138	1	MALE QUICK DISCONNECT, **(Before S/N 2005283-01)**
	9140-3414	1	MALE QUICK DISCONNECT, **(S/N 2005283-01 & After)**
41	9104-3125	1	DUST CAP
42	9104-3126	1	DUST CAP
43	8820-1008	2	HEX HD CAPSCREW, 1/4-20X1-3/4, GR5
44	8856-1002	2	FLAT WASHER, 1/4
45	9104-1362	2	ORIFICE FITTING
46	9108-3249	1	CLAMP SET
47	7713-3140	1	COVER PLATE
48	7713-3177	1	HEX HD CAPSCREW
49	9112-3134	1	CAPACITY DECAL, (not shown)
50	9104-3209	2	PINCH POINT DECAL
51	8866-2106	2	ELBOW, 90 DEGREES, (swivel nut)

** Revised parts list.*

OPTIONAL EQUIPMENT
(9108-5062) Deluxe Light Package
Starting Serial No. 0188002 thru 0288776
Original Issue 2-92
Revised 10-2-00

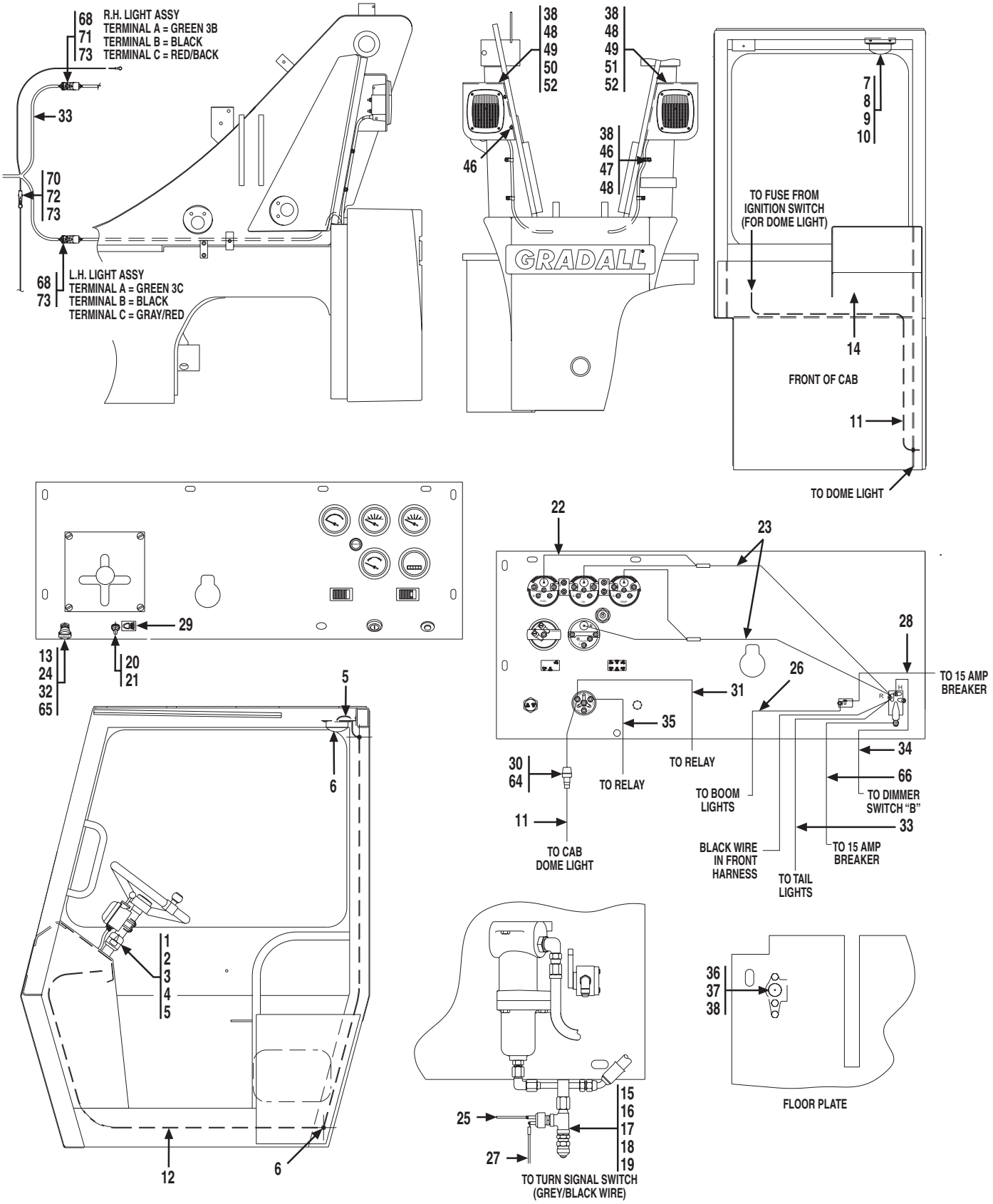

** Revised illustration, S/N range, and parts list.*

OPTIONAL EQUIPMENT
(9108-5062) Deluxe Light Package
Starting Serial No. 0188002 thru 0288776
Original Issue 2-92
Revised 10-2-00

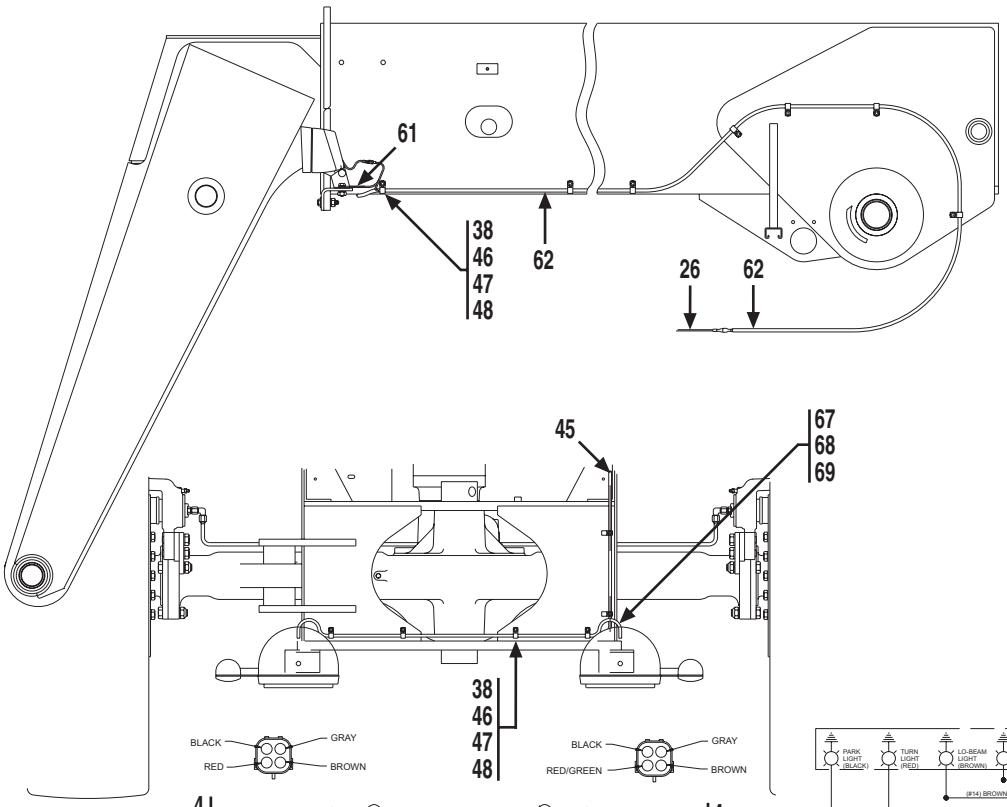

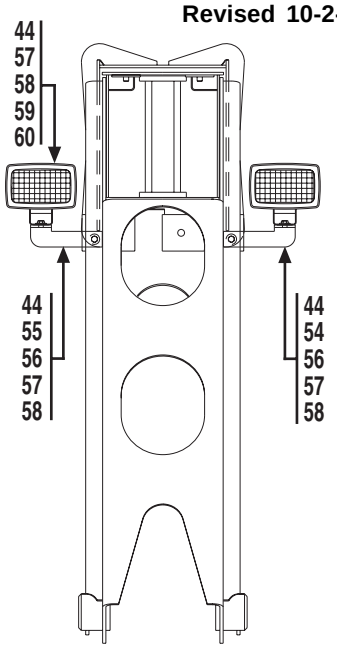

FRONT OF BOOM

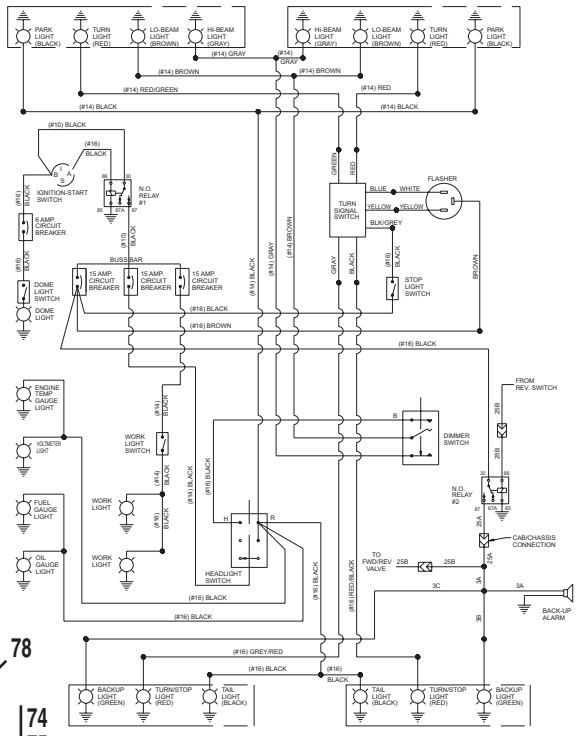

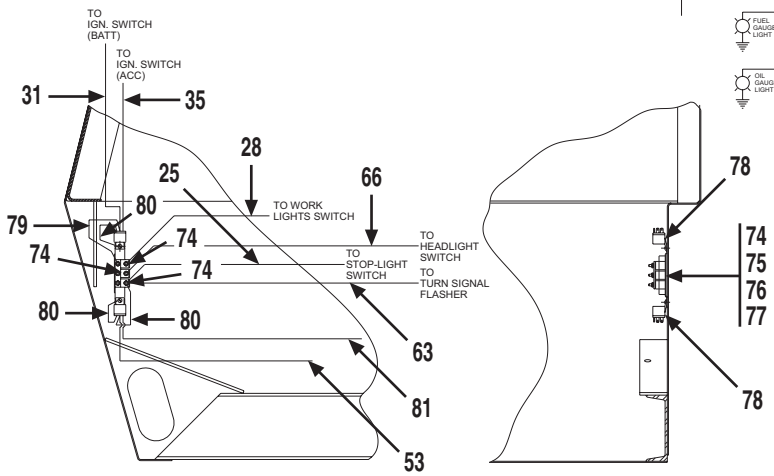

VIEWS INSIDE CAB

* *Revised illustration, S/N range, and parts list.*

OPTIONAL EQUIPMENT
(9108-5062) Deluxe Light Package
Starting Serial No. 0188002 thru 0288776
Original Issue 2-92
Revised 10-2-00

THIS OPTION DRAWS
APPROX. 41 AMPS. TOTAL

Item	Part No.	Qty.	Description Of Part
	9108-5062	1	DELUXE LIGHT PACKAGE, (includes all items)
1	9020-0999	1	TURN SIGNAL SWITCH
2	8098-3168	1	FLASHER SWITCH
3	9101-3026	1	PIG TAIL CONNECTOR
4	8698-3193	14	BULLET CONNECTOR
5	8668-3480	4	BUTT CONNECTOR
6	9002-7214	2	RUBBER GROMMET
7	9101-1009	1	MOUNTING BRACKET
8	9002-9955	1	RUBBER GROMMET
9	8832-1022	2	SELF TAPPING SCREW, #8-32X3/8
10	2486-1167	1	INTERIOR LIGHT
11	9112-1151	1	JUMPER WIRE
12	8668-3122	18	TIE-RAP
13	8830-1191	1	RD HD MACH SCREW, #10-32X3/8
14	9105-3419	13	TIE-RAP
15	8656-1326	1	ADAPTER
16	9103-3032	1	TEST COUPLING
17	8871-2232	1	STREET TEE, 1/4
18	8871-1380	1	REDUCING BUSHING, 1/4X1/8
19	8366-3097	1	STOPLIGHT SWITCH
20	7738-3467	1	LIGHT SWITCH
21	7738-3470	1	BOOT
22	9103-3360	4	GAUGE LIGHTING KIT
23	9112-1152	2	JUMPER WIRE
24	8855-1007	1	LOCKWASHER, #10
25	9112-1190	1	JUMPER WIRE
26	9108-1613	1	JUMPER WIRE
27	9112-1154	1	JUMPER WIRE
28	9112-1189	1	JUMPER WIRE
29	9100-3055	1	LIGHTS DECAL
30	9020-3376	1	IN-LINE FUSE, 6 AMP
31	9112-1186	1	JUMPER WIRE
32	8668-3127	1	HEADLAMP SWITCH
33	9108-3400	1	REAR WIRING HARNESS
34	9108-1614	1	JUMPER WIRE
35	9112-1187	1	JUMPER WIRE
36	8668-3136	1	DIMMER SWITCH
37	8820-1002	3	HEX HD CAPSCREW, 1/4-20X5/8, GR5
38	8855-1009	30	LOCKWASHER, 1/4
39	9108-3398	1	LAMP KIT
40	9108-1610	1	L.H. FRONT BRACKET
41	9108-1612	1	R.H. FRONT BRACKET
42	8820-1036	6	HEX HD CAPSCREW, 3/8-16X1-1/4, GR5
43	8856-1004	6	FLAT WASHER, 3/8
44	8855-1011	10	LOCKWASHER, 3/8
45	9108-3399	1	FRONT WIRING HARNESS
46	8366-1336	27	WELD STUD, 1/4-20X5/8
47	8662-1230	21	SUPPORT CLAMP
48	8850-1004	27	HEX NUT, 1/4-20
49	9136-5045	2	TAIL LIGHT ASSEMBLY, (includes the following seven items)
	9112-3065	1	TAIL LIGHT
	8666-1147	38"	WIRE, 16 GAUGE, (black)
	8666-1149	38"	WIRE, 16 GAUGE, (green)
	8666-1152	38"	WIRE, 16 GAUGE, (red)
	8668-3480	3	BUTT CONNECTOR
	8203-3996	45"	WIRE LOOM
	8668-3122	2	TIE WRAP
50	9108-1608	1	L.H. REAR LIGHT BRACKET
51	9108-1609	1	R.H. REAR LIGHT BRACKET
52	9112-1146	2	TAIL LIGHT BRACKET
53	9112-1193	1	JUMPER WIRE
54	9108-1606	1	L.H. LIGHT BRACKET
55	9108-1607	1	R.H. LIGHT BRACKET
56	8820-1037	2	HEX HD CAPSCREW, 3/8-16X1-1/2, GR5
57	8856-1109	4	FLAT WASHER, 3/8
58	8850-1006	4	HEX NUT, 3/8-16
59	9112-5110	2	HALOGEN WORK LIGHT KIT, (includes the following two items)
	8096-3050	1	UTILITY FLOOD LIGHT
	9002-8960	2	MALE TERMINAL
60	8820-1035	2	HEX HD CAPSCREW, 3/8-16X1, GR5
61	9112-1150	2	JUMPER WIRE
62	9108-3397	1	WIRING HARNESS
63	9108-1661	1	JUMPER WIRE
64	8698-3188	1	EYELET
65	8850-1613	1	HEX NUT, #10-32
66	9108-1660	1	JUMPER WIRE
67	8096-3062	2	W. PACK CONNECTOR, (shroud)
68	8096-3069	14	W. PACK CONNECTOR, (male pin)
69	8096-3067	8	W. PACK CONNECTOR, (cable seal)
70	8096-3055	1	W. PACK CONNECTOR, (tower)
71	8096-3060	2	W. PACK CONNECTOR, (shroud)
72	8096-3068	1	W. PACK CONNECTOR, (female pin)
73	8096-3066	7	W. PACK CONNECTOR, (cable seal)
74	9103-3462	3	CIRCUIT BREAKER, 15 AMP
75	7736-3191	1	CIRCUIT BREAKER BRACKET
76	8698-1178	1	BUSS BAR
77	8832-1039	2	SELF TAPPING SCREW, #10-32X1/2
78	7738-3410	2	RELAY
79	9112-1188	1	JUMPER WIRE
80	9112-1191	3	JUMPER WIRE
81	9108-1665	1	JUMPER WIRE

** Revised illustration, S/N range, and parts list.*

OPTIONAL EQUIPMENT
(9108-5104) Deluxe Light Package
Starting Serial No. 0288777
Original Issue 10-95
Revised 10-23-00

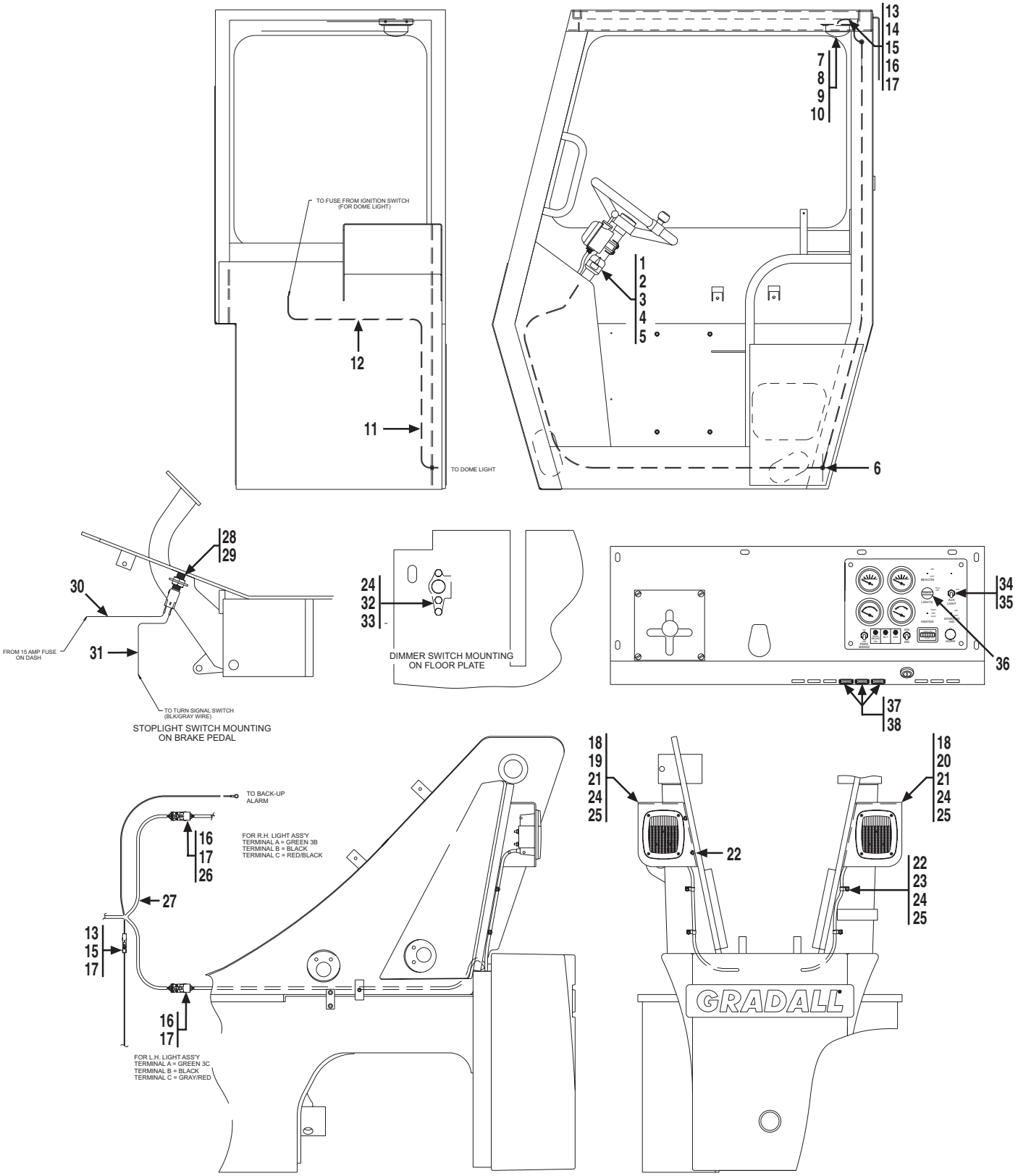

** Total revision of page.*

OPTIONAL EQUIPMENT
(9108-5104) Deluxe Light Package
Starting Serial No. 0288777
Original Issue 10-95
Revised 10-23-00

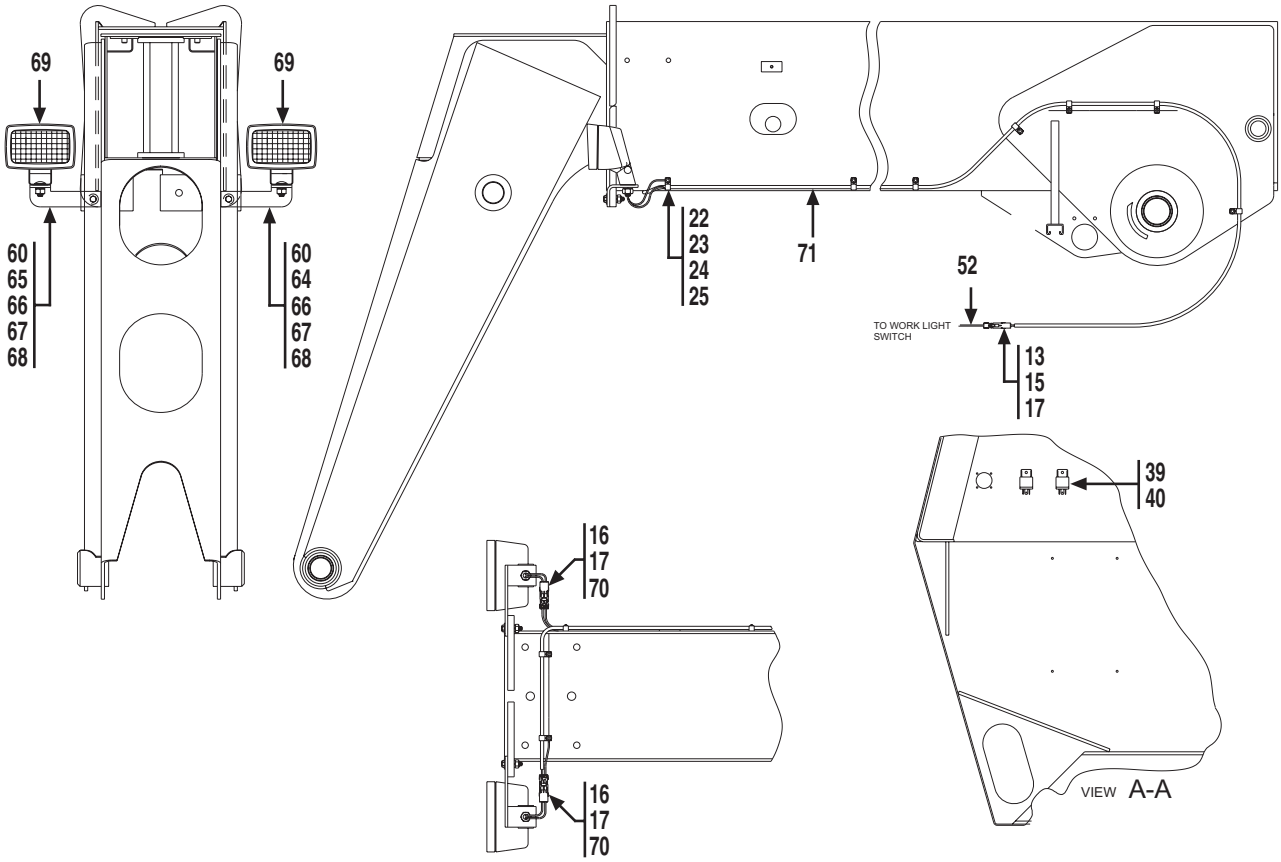

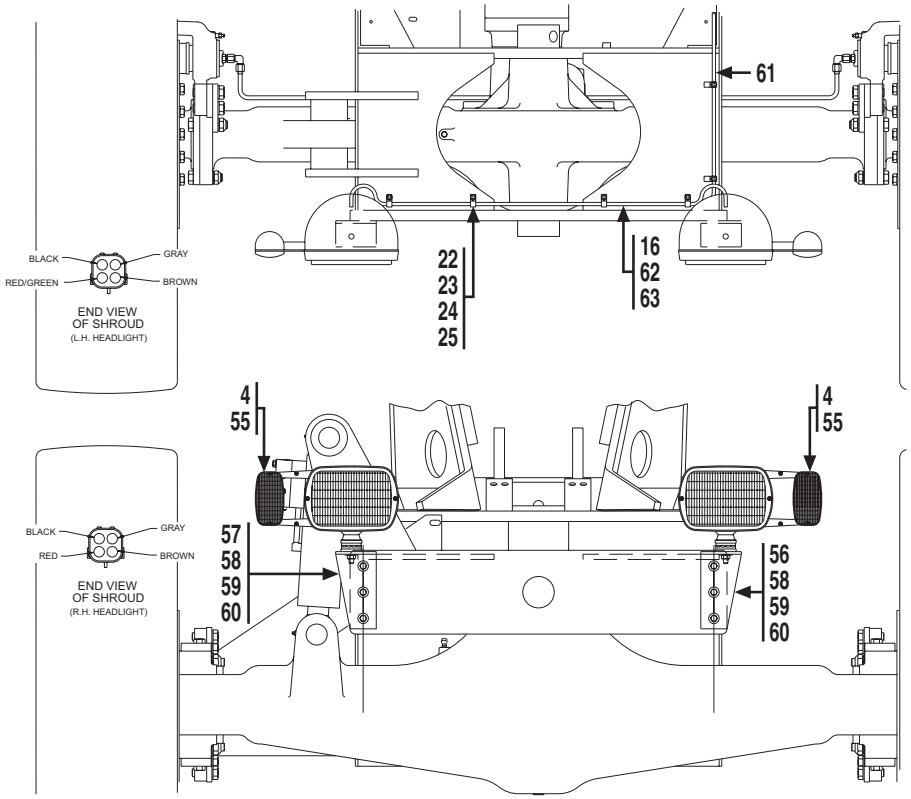

** Total revision of page.*

OPTIONAL EQUIPMENT
(9108-5104) Deluxe Light Package
Starting Serial No. 0288777
Original Issue 10-95
Revised 10-23-00

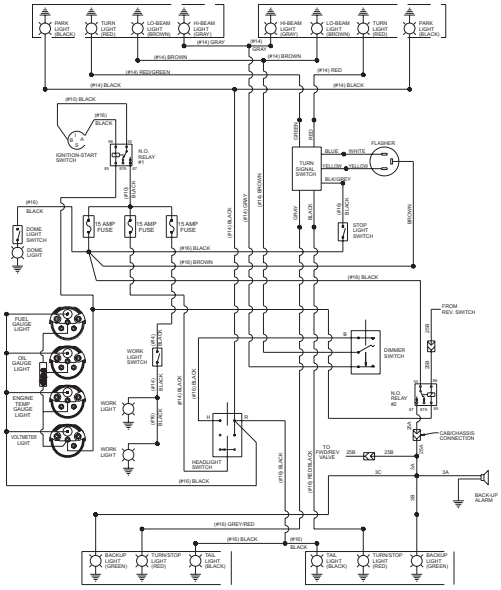

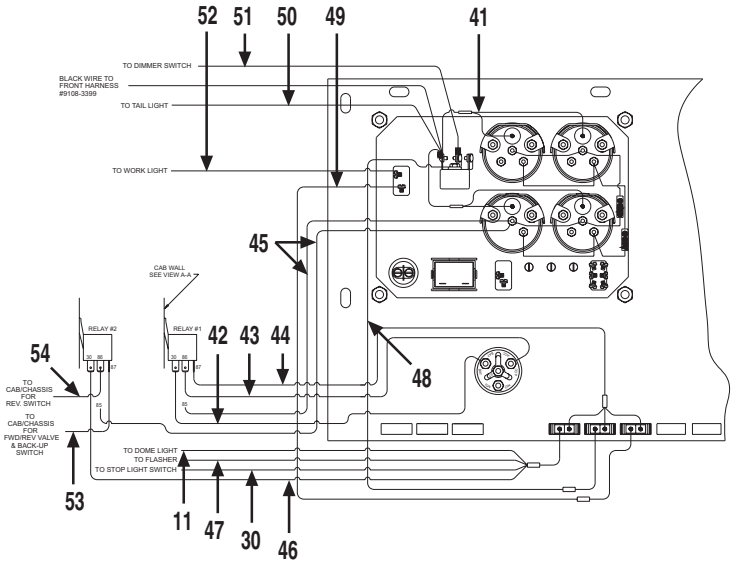

Item	Part No.	Qty.	Description Of Part
	9108-5104	1	DELUXE LIGHT PACKAGE, (includes all items)
1	9020-0999	1	TRUN SIGNAL SWITCH
2	8668-3381	1	FLASHER SWITCH
3	9101-3026	1	PIG TAIL CONNECTOR
4	8698-3193	14	BULLET CONNECTOR
5	8668-3480	3	BUTT CONNECTOR
6	9002-7214	2	RUBBER GROMMET
7	9101-1009	1	MOUNTING BRACKET
8	9002-9955	1	RUBBER GROMMET
9	8832-1022	2	SELF TAPPING SCREW, #8-32X3/8
10	2486-1167	1	INTERIOR LIGHT
11	9112-1151	1	JUMPER WIRE
12	9105-3419	7	TIE WRAP
13	8096-3055	3	W. PACK CONNECTOR, (tower)
14	8096-3056	1	W. PACK CONNECTOR, (shroud)
15	8096-3068	3	W. PACK CONNECTOR, (female pin)
16	8096-3069	17	W. PACK CONNECTOR, (male pin)
17	8096-3066	12	W. PACK CONNECTOR, (cable seal)
18	9136-5045	2	TAIL LIGHT ASSEMBLY, (includes the following seven items)
	9112-3065	1	TAIL LIGHT
	8666-1147	38"	WIRE, 16 GAUGE, (black)
	8666-1149	38"	WIRE, 16 GAUGE, (green)
	8666-1152	38"	WIRE, 16 GAUGE, (red)
	8668-3480	3	BUTT CONNECTOR
	8203-3996	45"	WIRE LOOM
	8668-3122	2	TIE WRAP
19	9108-1608	1	L.H. REAR LIGHT BRACKET
20	9108-1609	1	R.H. REAR LIGHT BRACKET
21	9112-1146	1	TAIL LIGHT BRACKET
22	8366-1336	27	WELD STUD, 1/4-20X5/8
23	8662-1230	21	SUPPORT CLAMP
24	8855-1009	30	LOCKWASHER, 1/4
25	8850-1004	27	HEX NUT, 1/4-20
26	8096-3060	2	W. PACK CONNECTOR, (shroud)
27	9108-3400	1	REAR WIRING HARNESS
28	9114-1197	1	MOUNTING TAB
29	9114-3117	1	STOPLIGHT SWITCH
30	9114-1256	1	JUMPER WIRE
31	9114-1257	1	JUMPER WIRE
32	8668-3136	1	DIMMER SWITCH

Item	Part No.	Qty.	Description Of Part
33	8820-1002	3	HEX HD CAPSCREW, 1/4-20X5/8, GR5
34	7738-3467	1	LIGHT SWITCH
35	7738-3470	1	BOOT
36	8668-3127	1	HEAD LAMP SWITCH
37	9114-3108	3	FUSE HOLDER
38	7736-3268	3	FUSE, 15 AMP
39	7738-3410	2	RELAY
40	8832-1039	2	SELF-TAPPING SCREW, #10-32X1/2
41	9103-3360	4	GAUGE LIGHTING KIT
42	9112-1186	1	JUMPER WIRE
43	9112-1187	1	JUMPER WIRE
44	9108-1686	1	JUMPER WIRE
45	9114-1265	2	JUMPER WIRE
46	9108-1687	1	JUMPER WIRE
47	9108-1688	1	JUMPER WIRE
48	9108-1689	1	JUMPER WIRE
49	9112-1216	1	JUMPER WIRE
50	9108-3400	1	REAR WIRING HARNESS
51	9108-1614	1	JUMPER WIRE
52	9108-1613	1	JUMPER WIRE
53	9108-1665	1	JUMPER WIRE
54	9112-1193	1	JUMPER WIRE
55	9108-3398	1	HEAD/TURN/PARK/LAMP KIT
56	9108-1610	1	L.H. FRONT BRACKET
57	9108-1612	1	R.H. FRONT BRACKET
58	8820-1036	6	HEX HD CAPSCREW, 3/8-16X1-1/4, GR5
59	8856-1004	6	FLAT WASHER, 3/8
60	8855-1011	8	LOCKWASHER, 3/8
61	9108-3399	1	FRONT WIRING HARNESS
62	8096-3062	2	W. PACK CONNECTOR, (shroud)
63	8096-3067	8	W. PACK CONNECTOR, (cable seal)
64	9108-1606	1	L.H. LIGHT BRACKET
65	9108-1607	1	R.H. LIGHT BRAKCET
66	8820-1037	2	HEX HD CAPSCREW, 3/8-16X1-1/2, GR5
67	8856-1109	2	FLATWASHER, 3/8
68	8850-1006	2	HEX NUT, 3/8-16
69	8096-3050	2	UTILITY FLOOD LIGHT
70	8096-3058	2	W. PACK CONNECTOR, (shroud)
71	9108-3397	1	WIRING HARNESS

** Total revision of page.*

OPTIONAL EQUIPMENT
(9112-5021) Beacon Light Package
Original Issue 2-92
Revised 10-13-95

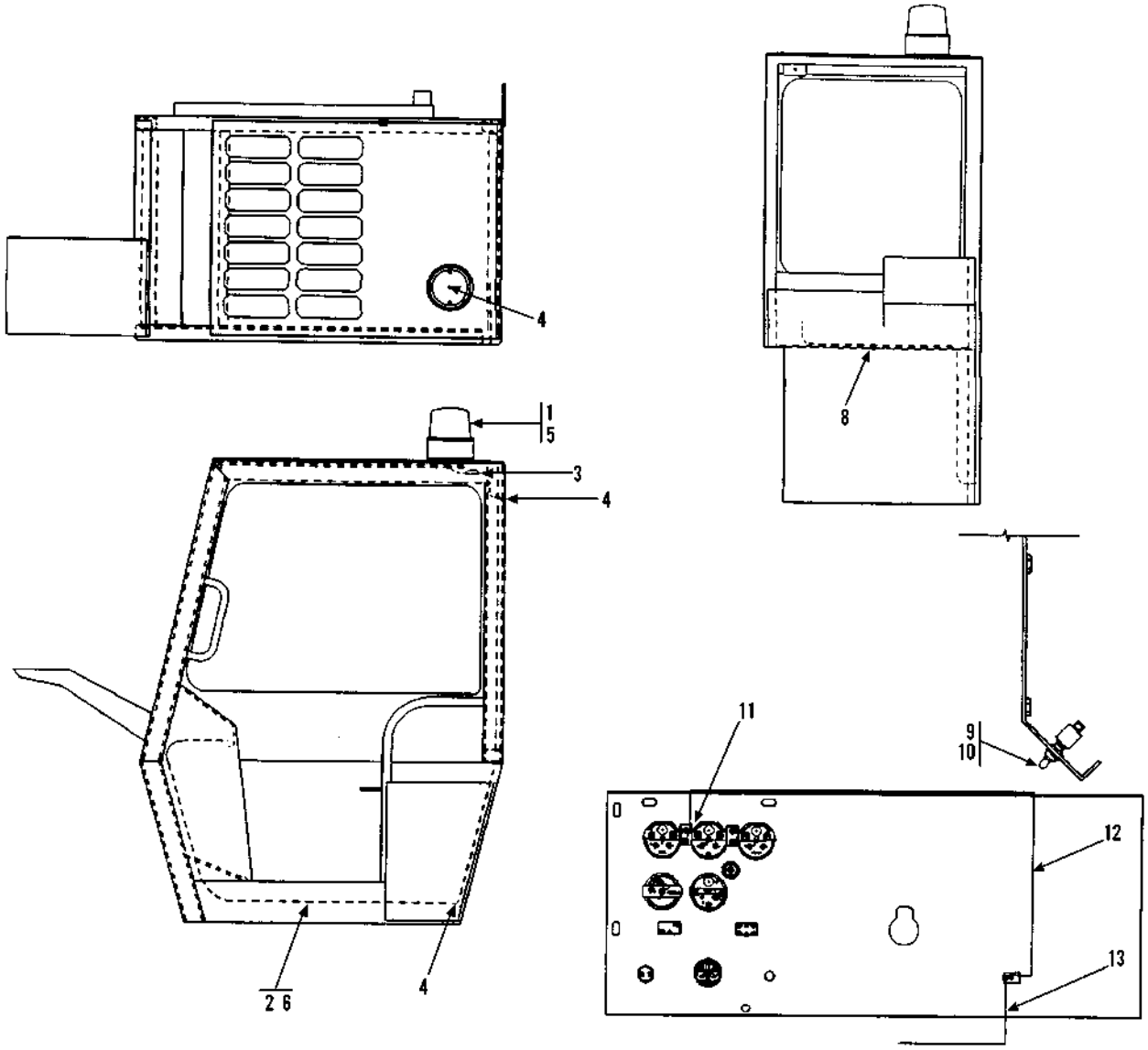

Item	Part No.	Qty.	Description Of Part
	9112-5021	Ref	BEACON LIGHT PACKAGE (includes all items)
1	9020-0685	1	ROTATING BEACON
2	9112-1151	1	JUMPER WIRE
3	8668-3480	1	BUTT CONNECTOR
4	9002-7214	3	RUBBER GROMMET
5	8850-1004	2	HEX NUT, 1/4-20
6	8668-3122	6	TY-WRAP
* 7			
8	9105-3419	6	TY-WRAP
9	9020-0170	1	LIGHT SWITCH
10	9100-3056	1	BEACON DECAL
11	9020-0506	1	CIRCUIT BREAKER (30 AMP)
12	9112-1153	1	JUMPER WIRE

** Removed item 7.*

OPTIONAL EQUIPMENT
(9112-5042) Beacon Light Package
Starting Serial No. 0288777
Original Issue 10-95

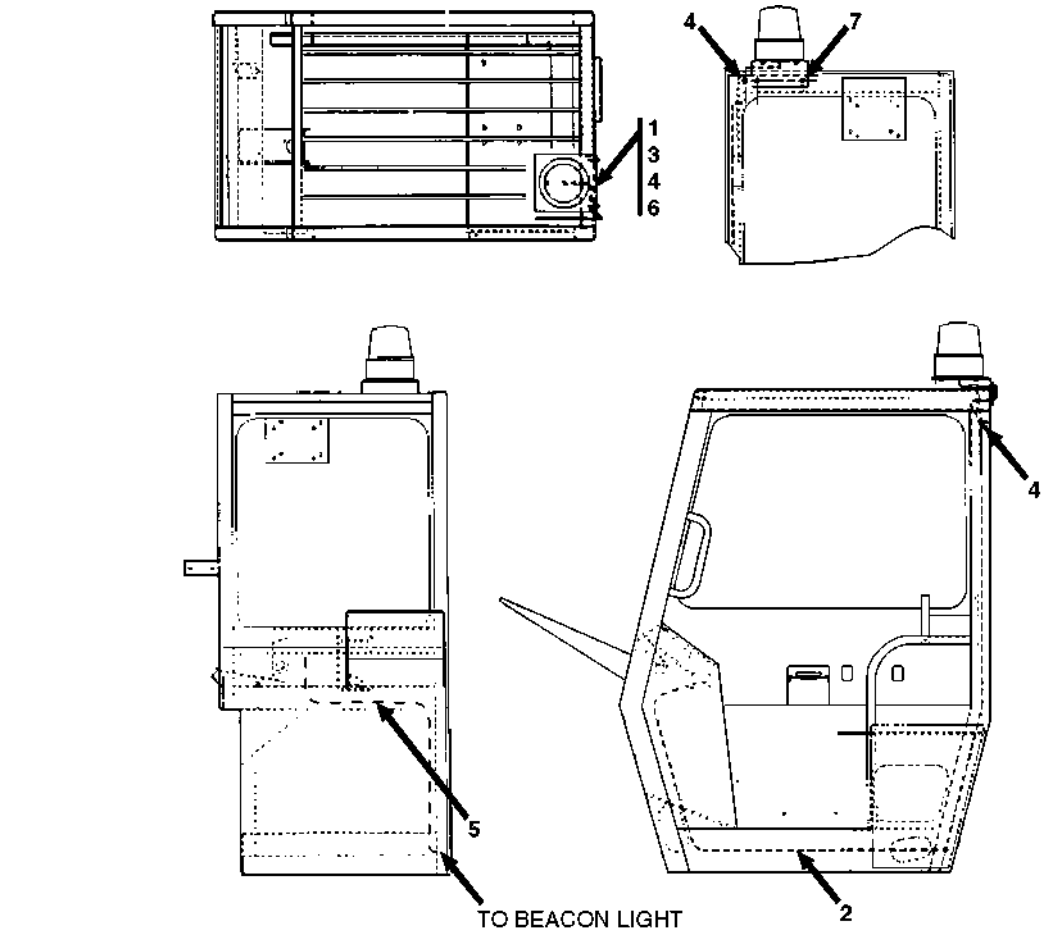

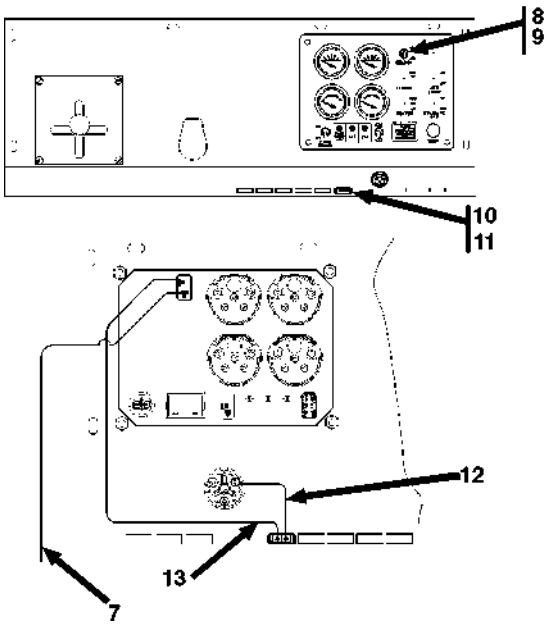

Item	Part No.	Qty.	Description Of Part
	9112-5042	Ref	BEACON LIGHT PACKAGE (includes all items)
1	9020-0685	1	ROTATING BEACON
2	9112-1151	1	JUMPER WIRE
3	8668-3480	1	BUTT CONNECTOR
4	9002-7214	5	RUBBER GROMMET
5	9105-3419	6	TIE WRAP
6	9112-1215	1	BRACKET
7	9002-7319	2	DRILL & TAP SCREW, 1/4-20 x 1
8	7738-3467	1	TOGGLE-SPST
9	7738-3470	1	BOOT
10	9114-3108	1	FUSE HOLDER
11	7736-3268	1	15 AMP FUSE
12	9114-1259	1	JUMPER WIRE
13	9112-1216	1	JUMPER WIRE

OPTIONAL EQUIPMENT
(9112-5103) Beacon Light Package
Starting Serial No. 0488238
Original Issue 10-97

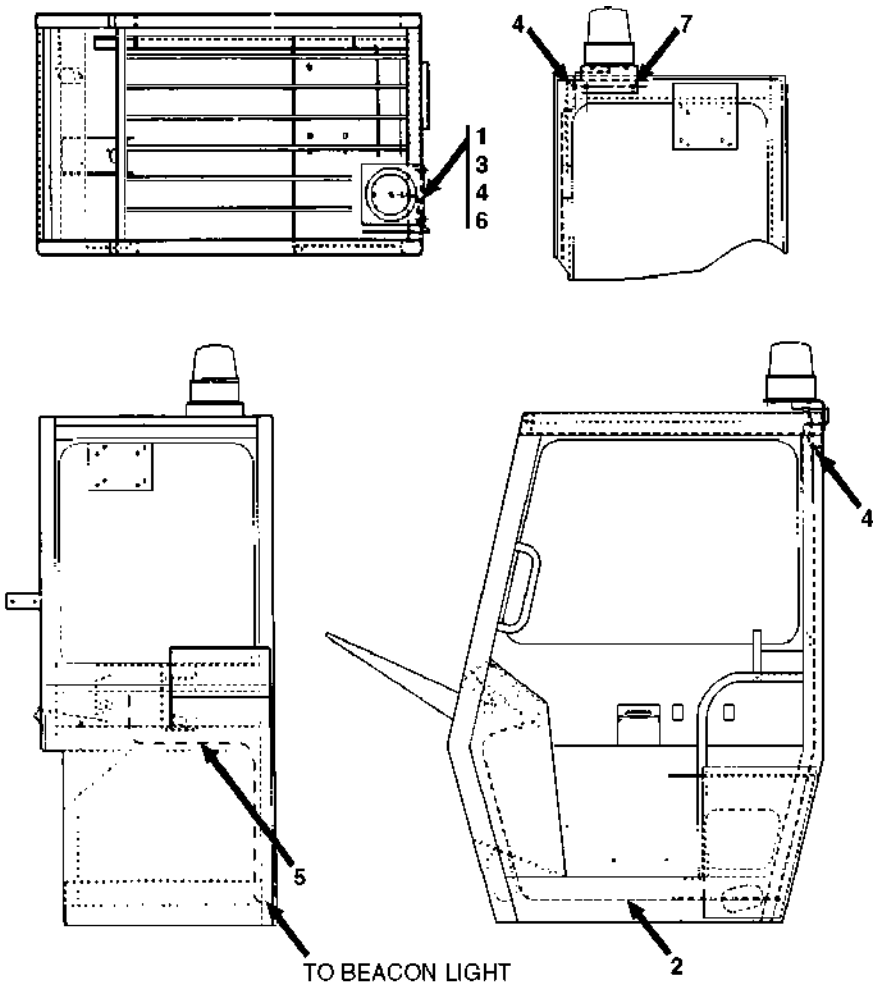

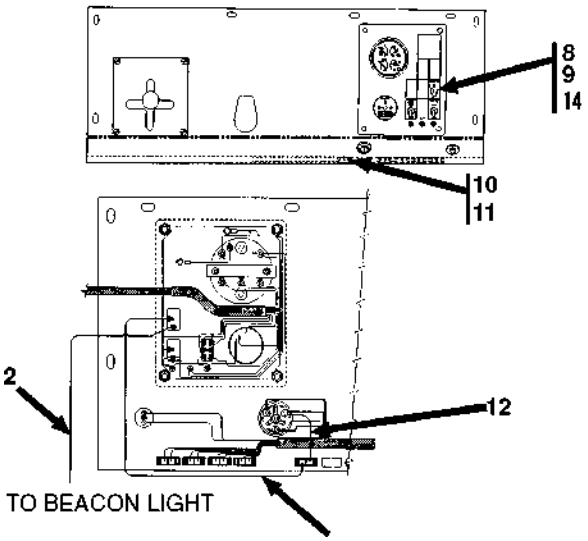

Item	Part No.	Qty.	Description Of Part
	9112-5103	Ref	BEACON LIGHT PACKAGE (includes all items)
1	9020-0685	1	ROTATING BEACON
2	9112-1151	1	JUMPER WIRE
3	8668-3480	1	BUTT CONNECTOR
4	9002-7214	5	RUBBER GROMMET
5	9105-3419	6	TIE WRAP
6	9112-1215	1	BRACKET
7	9002-7319	2	DRILL & TAP SCREW, 1/4-20 x 1
8	7738-3467	1	TOGGLE-SPST
9	7738-3470	1	BOOT
10	9114-3108	1	FUSE HOLDER
11	7736-3268	1	15 AMP FUSE
12	9114-1259	1	JUMPER WIRE
13	9112-1216	1	JUMPER WIRE
14	9112-3177	1	BEACON DECAL

OPTIONAL EQUIPMENT
(9045-5043) Drywall Carriage Assembly
Original Issue 2-92
Revised 10-16-95

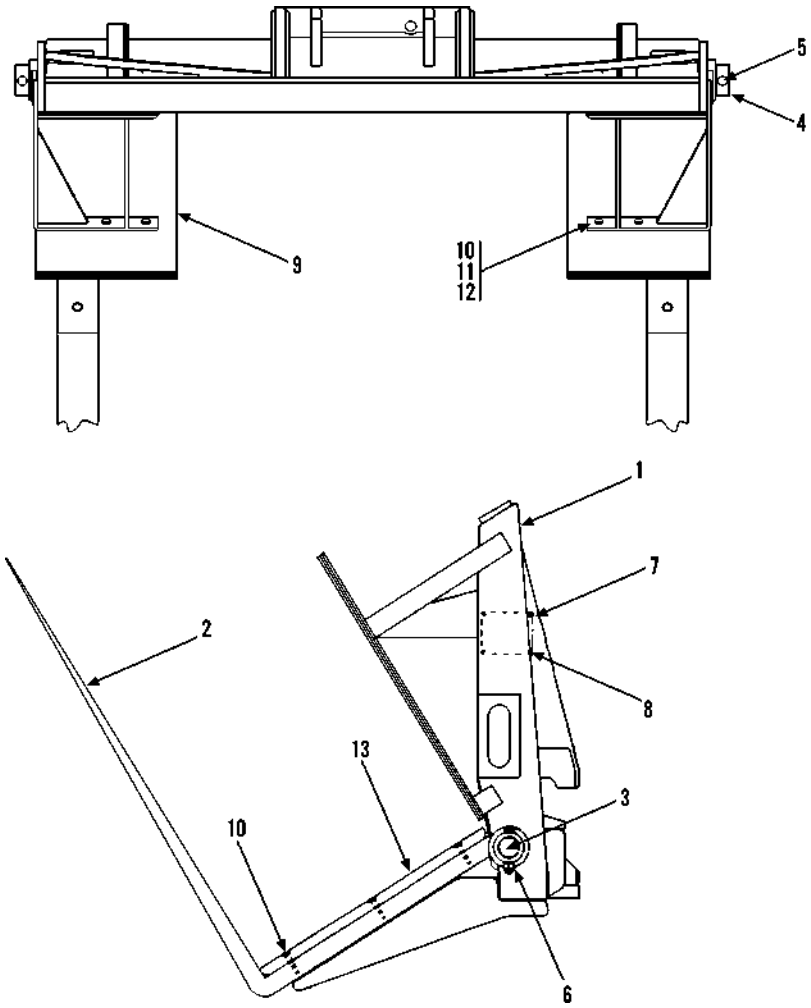

Item	Part No.	Qty.	Description Of Part
	9045-5043	Ref	DRYWALL CARRIAGE ASSY (includes all items)
1	9045-6004	1	DRYWALL CARRIAGE WELDMENT
2	9045-3013	2	DRYWALL FORK
3	9045-1020	2	FORK PIN
4	9020-0003	1	COLLAR TUBE
5	8820-1105	4	HEX HD CAPSCREW 5/8-11X4, GR5
6	8852-1310	4	HEX LOCKNUT, 5/8-11
7	9015-3001	1	ATTACHMENT SERIAL NUMBER PLATE
8	8834-1022	4	DRIVE SCREW, #10X3/8
9	9055-3012	2	SIDE DRYWALL GUARD
10	8824-1053	14	SOCKET FLAT HD CAPSCREW, 3/8-16X1-1/2
11	8855-1011	8	LOCKWASHER, 3/8
12	8850-1006	8	HEX NUT, 3/8-16
13	9055-3013	2	BOTTOM DRYWALL GUARD

** Changed upper left to designate model more clearly.*

OPTIONAL EQUIPMENT
(9112-5007) Stabilizer Option
Original Issue 2-93
Revised 10-12-95

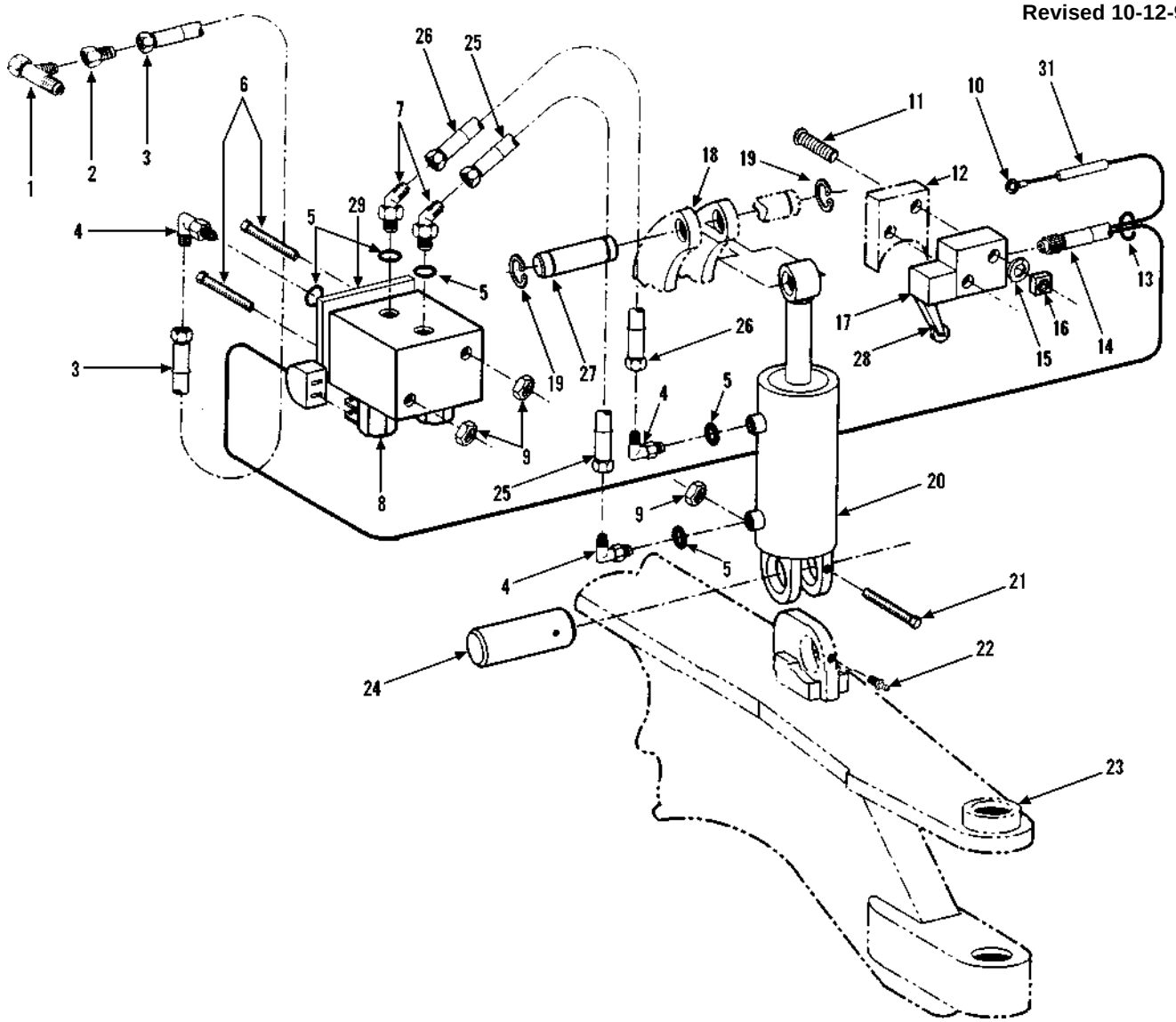

Item	Part No.	Qty.	Description Of Part
	9112-5007	Ref	REAR AXLE STABILIZER (includes all items)
1	8866-2244	1	SWIVEL NUT RUN TEE, 1" TUBE
2	9103-3230	1	REDUCER
3	8471-6426	1	HOSE ASSY
4	8866-2065	3	ELBOW, 90 DEGREES (includes item 5)
5	8859-1205	5	O-RING
6	8320-1073	2	HEX HD CAPSCREW, 3/8-16X4-1/2, GR5
7	8866-2085	2	ELBOW, 45 DEGREES (includes item 5)
8	9111-3003	1	STABILIZER VALVE
9	8852-1206	3	HEX LOCKNUT, 3/8-16
10	9111-1002	1	JUMPER WIRE
11	8830-1099	2	ROUND HD MACHINE SCREW, #10-24 X1-3/4
12	9112-1018	1	BRACKET
13	9002-7187	4	TY-WRAP
14	9104-5034	1	BOOM SWITCH HARNESS
15	8855-1007	2	LOCKWASHER, #10

Item	Part No.	Qty.	Description Of Part
16	9104-3199	2	SQUARE NUT
17	9104-3123	1	SWITCH (includes item 28)
18	9112-1013	1	STABILIZER BRACKET
19	8858-1140	2	SNAP RING
20		Ref	STABILIZER CYLINDER (see page 13-20 for details)
21	8820-1044	1	HEX HD CAPSCREW, 3/8-16X3-1/4, GR5
22	8867-1008	1	LUBE FITTING, STRAIGHT 1/4-28
23	9104-6114	1	REAR AXLE WELDMENT
24	9112-1017	1	PIN
25	8471-7888	1	HOSE ASSY
26	8471-7887	1	HOSE ASSY
27	9104-1227	1	PIN
28	9104-4475	1	LEVER/ROLLER ASSY
*29	9111-1001	1	MOUNTING PLATE
*30	9112-1098	1	ACTUATOR - NOT SHOWN (adjust to operate when boom angle is 45º ± 2º)
*31	8203-3993	120"	LOOM, 5/16 I.D.

** Added items 29, 30 & 31.*

OPTIONAL EQUIPMENT
(9112-5089) Stabilizer Option
534C6-36 FT. BOOM
Starting S/N 0488238
Original Issue 10-97

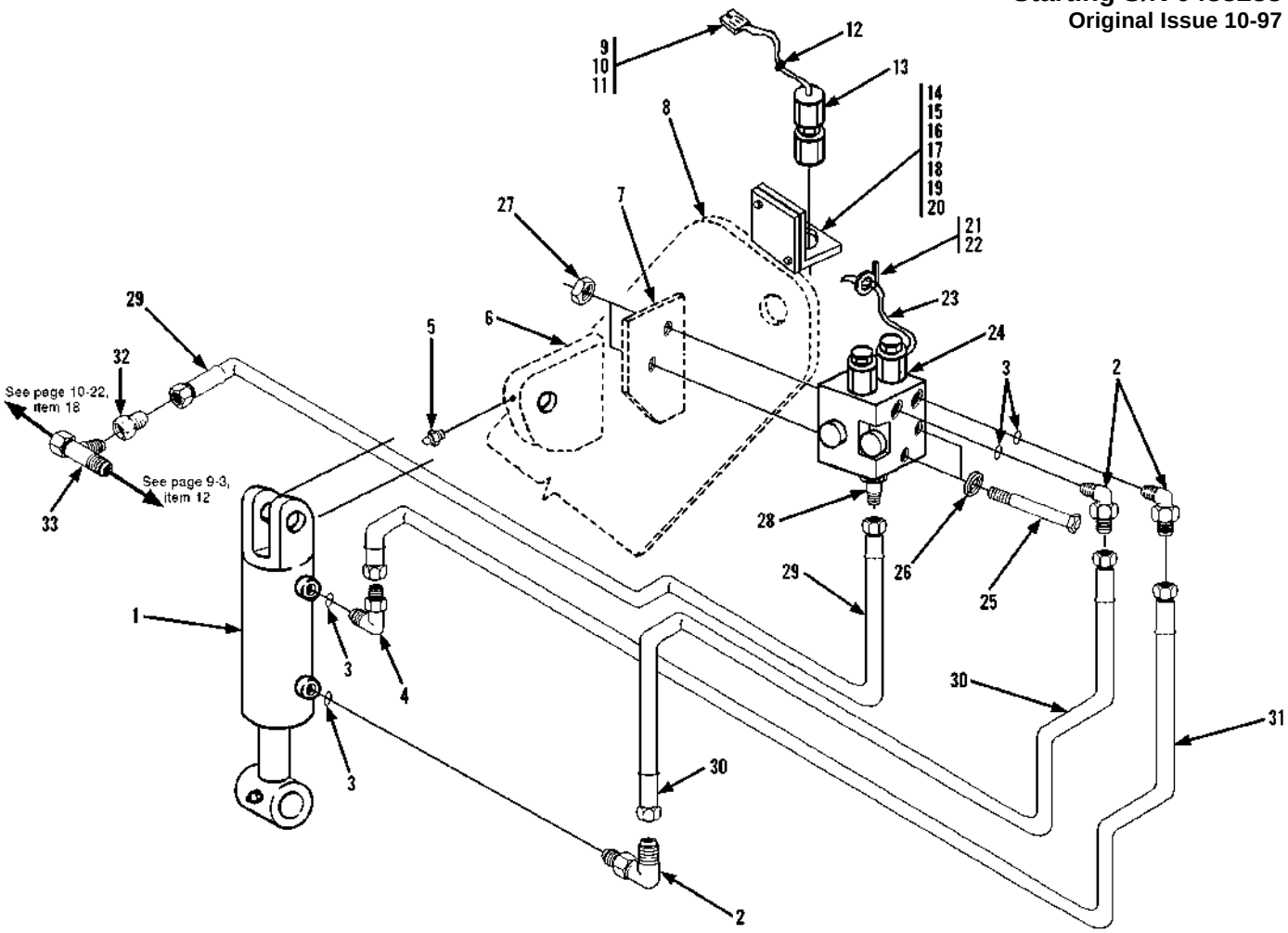

Item	Part No.	Qty.	Description Of Part
	9112-5089	1	STABILIZER OPTION - 534C-6, (36 ft. boom)(includes all items on pages 13-19, 13-35 & 13-37)
1		Ref	STABILIZER CYLINDER (see page 13-35 for details)
2	8866-2065	3	ELBOW, 90 DEGREES (includes item 3)
3	8859-1205	4	O-RING
4	8866-2085	1	ELBOW, 45 DEGREES (includes item 3)
5	8867-1008	1	LUBE FITTING, 1/4-28, STRAIGHT
6	9116-1083	1	STABILIZER LUG
7	9116-1379	1	VALVE MOUNT PLATE
8	9112-6081	1	FRAME WELD
9	8096-3062	1	WEATHERPROOF SHROUD (4-wire)
10	8096-3069	4	MALE PIN TERMINAL
11	8096-3066	4	CABLE SEALS
12	9105-3419	1	TIE WRAP
13	9114-3155	1	PROXIMITY SENSOR SWITCH
14	9114-1260	1	BRACKET
15	8830-1093	2	RD. HD. MACH. SCREW, #10-24X3/4
16	8855-1007	2	LOCKWASHER, #10

Item	Part No.	Qty.	Description Of Part
17	8856-1001	4	WASHER, 3/16
18	9104-3199	2	SQUARE NUT, #10-24
19	9002-7187	8	TIE WRAP
20	9002-1705	1	SUPPORT CLAMP
21	8662-1230	2	SUPPORT CLAMP
22	7714-3006	2	WHIZ LOCK NUT
23	9116-3049	1	STABILIZER HARNESS
24		Ref	STABILIZER CYLINDER VALVE (see page 13-37 for details)
25	8820-1047	2	HEX HD CAPSCREW, 3/8-16X4, GR5
26	8855-1011	2	LOCKWASHER, 3/8
27	8850-1006	2	HEX NUT, 3/8-16
28	8866-2019	1	CONNECTOR (includes o-ring)
	8859-1206	1	O-RING
29	8471-8287	1	HOSE ASSY
30	7713-3145	1	HOSE ASSY
31	8471-8989	1	HOSE ASSY
32	9103-3230	1	TUBE END REDUCER
33	8866-2244	1	SWIVEL NUT RUN TEE, 1" TUBE
34	9116-6013	1	REAR AXLE WELDMENT (not shown)

OPTIONAL EQUIPMENT
(9132-5035) Stabilizer Option
(534C6-Turbo) 36 FT. BOOM
Starting S/N 0488238
Original Issue 10-97

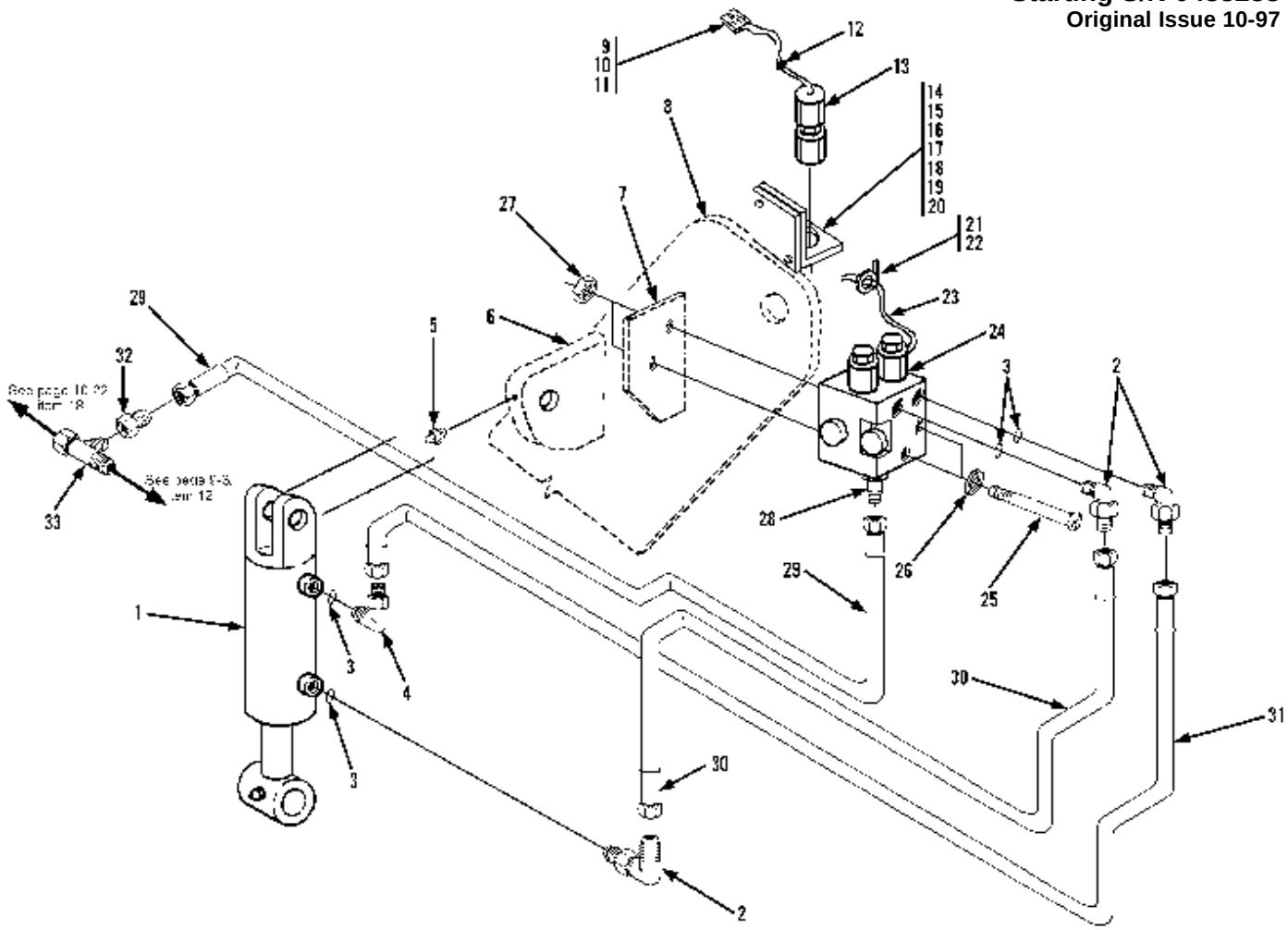

Item	Part No.	Qty.	Description Of Part
	9132-5035	1	STABILIZER OPTION - 534C6-T, (36 ft. boom)(includes all items on pages 13-19, 13-35 & 13-37)
1		Ref	STABILIZER CYLINDER (see page 13-35 for details)
2	8866-2065	3	ELBOW, 90 DEGREES (includes item 3)
3	8859-1205	4	O-RING
4	8866-2085	1	ELBOW, 45 DEGREES (includes item 3)
5	8867-1008	1	LUBE FITTING, 1/4-28, STRAIGHT
6	9116-1083	1	STABILIZER LUG
7	9116-1379	1	VALVE MOUNT PLATE
8	9132-6026	1	FRAME WELD
9	8096-3062	1	WEATHERPROOF SHROUD (4-wire)
10	8096-3069	4	MALE PIN TERMINAL
11	8096-3066	4	CABLE SEALS
12	9105-3419	1	TIE WRAP
13	9114-3155	1	PROXIMITY SENSOR SWITCH
14	9114-1260	1	BRACKET
15	8830-1093	2	RD. HD. MACH. SCREW, #10-24X3/4
16	8855-1007	2	LOCKWASHER, #10

Item	Part No.	Qty.	Description Of Part
17	8856-1001	4	WASHER, 3/16
18	9104-3199	2	SQUARE NUT, #10-24
19	9002-7187	8	TIE WRAP
20	9002-1705	1	SUPPORT CLAMP
21	8662-1230	2	SUPPORT CLAMP
22	7714-3006	2	WHIZ LOCK NUT
23	9116-3049	1	STABILIZER HARNESS
24		Ref	STABILIZER CYLINDER VALVE (see page 13-37 for details)
25	8820-1047	2	HEX HD CAPSCREW, 3/8-16X4, GR5
26	8855-1011	2	LOCKWASHER, 3/8
27	8850-1006	2	HEX NUT, 3/8-16
28	8866-2019	1	CONNECTOR (includes o-ring)
	8859-1206	1	O-RING
29	8471-8287	1	HOSE ASSY
30	7713-3145	1	HOSE ASSY
31	8471-8989	1	HOSE ASSY
32	9103-3230	1	TUBE END REDUCER
33	8866-2244	1	SWIVEL NUT RUN TEE, 1" TUBE
34	9116-6013	1	REAR AXLE WELDMENT (not shown)

OPTIONAL EQUIPMENT
(9112-5097) Stabilizer Option
534C6-42 FT. BOOM
Starting S/N 0488238

Original Issue 10-97
Revised 2-25-98

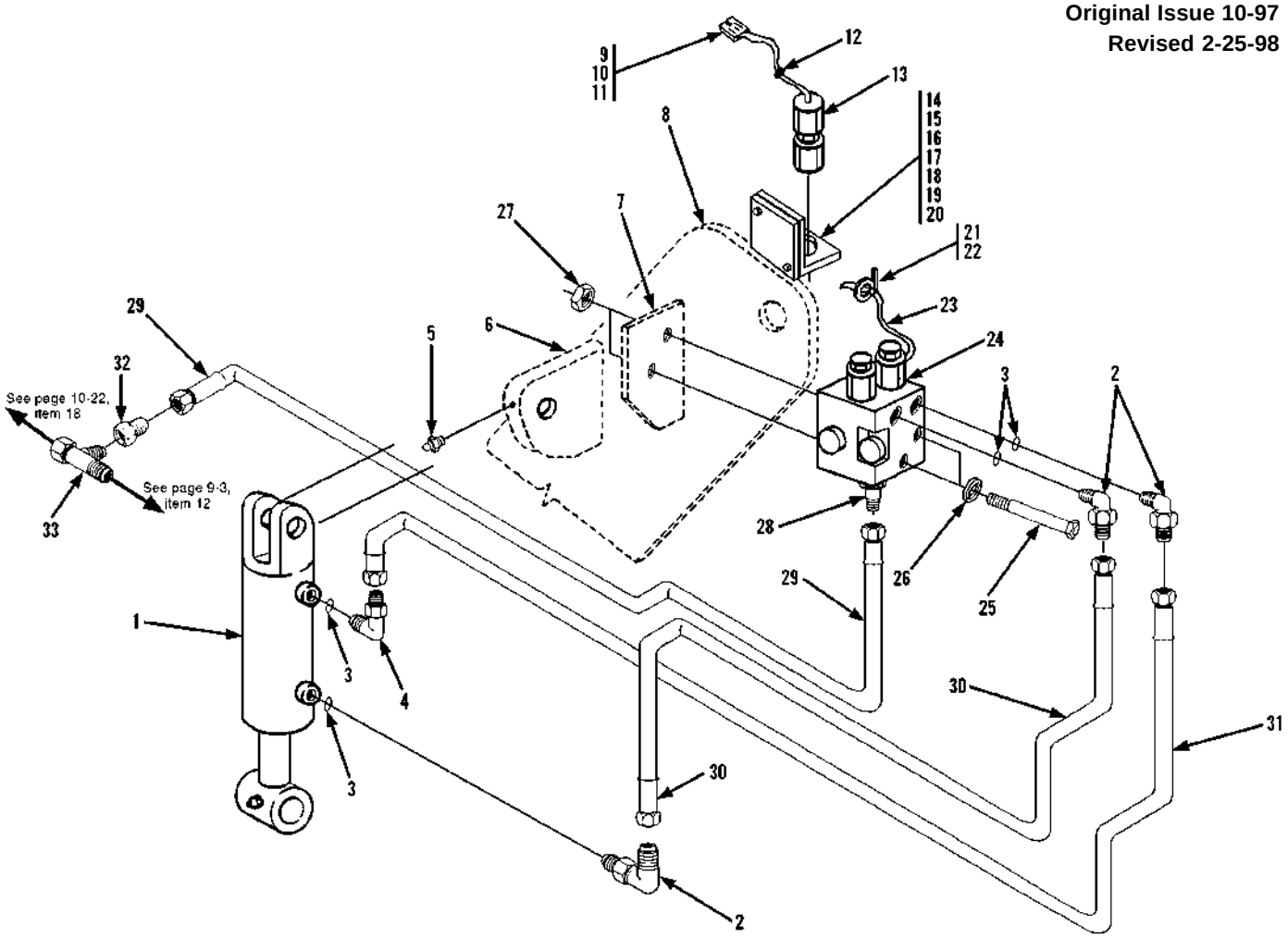

Item	Part No.	Qty.	Description Of Part
	9112-5097	1	STABILIZER OPTION - 534C-6, (42 ft. boom)(includes all items on pages 13-19, 13-35 & 13-37)
1		Ref	STABILIZER CYLINDER (see page 13-35 for details)
2	8866-2065	3	ELBOW, 90 DEGREES (includes item 3)
3	8859-1205	4	O-RING
4	8866-2085	1	ELBOW, 45 DEGREES (includes item 3)
5	8867-1008	1	LUBE FITTING, 1/4-28, STRAIGHT
6	9116-1083	1	STABILIZER LUG
7	9116-1379	1	VALVE MOUNT PLATE
* 8	9112-6048	1	FRAME WELD
9	8096-3062	1	WEATHERPROOF SHROUD (4-wire)
10	8096-3069	4	MALE PIN TERMINAL
11	8096-3066	4	CABLE SEALS
12	9105-3419	1	TIE WRAP
13	9114-3155	1	PROXIMITY SENSOR SWITCH
14	9114-1260	1	BRACKET
15	8830-1093	2	RD. HD. MACH. SCREW, #10-24X3/4
16	8855-1007	2	LOCKWASHER, #10

Item	Part No.	Qty.	Description Of Part
17	8856-1001	4	WASHER, 3/16
18	9104-3199	2	SQUARE NUT, #10-24
19	9002-7187	8	TIE WRAP
20	9002-1705	1	SUPPORT CLAMP
21	8662-1230	2	SUPPORT CLAMP
22	7714-3006	2	WHIZ LOCK NUT
23	9116-3049	1	STABILIZER HARNESS
24		Ref	STABILIZER CYLINDER VALVE (see page 13-37 for details)
25	8820-1047	2	HEX HD CAPSCREW, 3/8-16X4, GR5
26	8855-1011	2	LOCKWASHER, 3/8
27	8850-1006	2	HEX NUT, 3/8-16
28	8866-2019	1	CONNECTOR (includes o-ring)
	8859-1206	1	O-RING
29	8471-8287	1	HOSE ASSY
30	7713-3145	1	HOSE ASSY
31	8471-8989	1	HOSE ASSY
32	9103-3230	1	TUBE END REDUCER
33	8866-2244	1	SWIVEL NUT RUN TEE, 1" TUBE
34	9116-6013	1	REAR AXLE WELDMENT (not shown)

** Corrected part number on item 8.*

OPTIONAL EQUIPMENT
(9104-3303) Stabilizer Cylinder

Original Issue 2-93
Revised 10-16-95

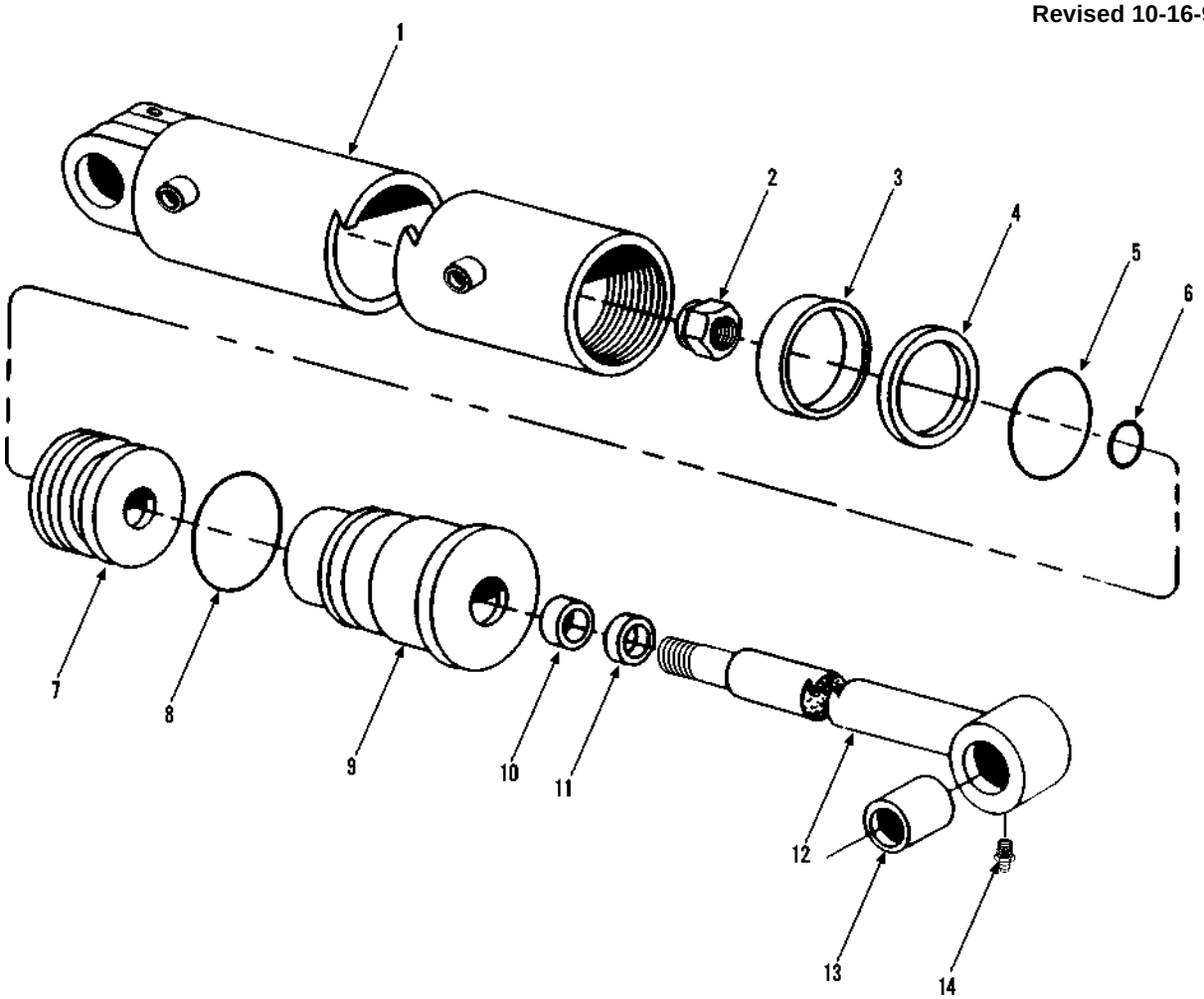

Item	Part No.	Qty.	Description Of Part
	9104-3303	1	STABILIZER CYLINDER ASSY (includes all items)
	9104-4330	1	SEAL KIT (includes items 3, 4, 5, 6, 8, 10 & 11)
2	9103-4286	1	LOCKNUT (torque to 590 ft.lbs.)
3		1	WEAR NUT
4		1	SEAL
5		1	O-RING
6		1	O-RING
7	9104-4331	1	PISTON
8		1	O-RING
9	9104-4332	1	GLAND
10		1	SEAL
11		1	WIPER
12	9104-4333	1	ROD ASSY (includes item 13)
13	9104-4353	1	BUSHING
14	8867-1033	1	LUBE FITTING, STRAIGHT 1/4-28
			NOTE: ONLY ITEMS WITH PART NUMBERS ARE AVAILABLE FOR SERVICE

** Changed upper left to designate model more clearly.*

OPTIONAL EQUIPMENT
(9112-5023) Joystick Installation Assembly
Original Issue 3-93
Revised 10-13-95

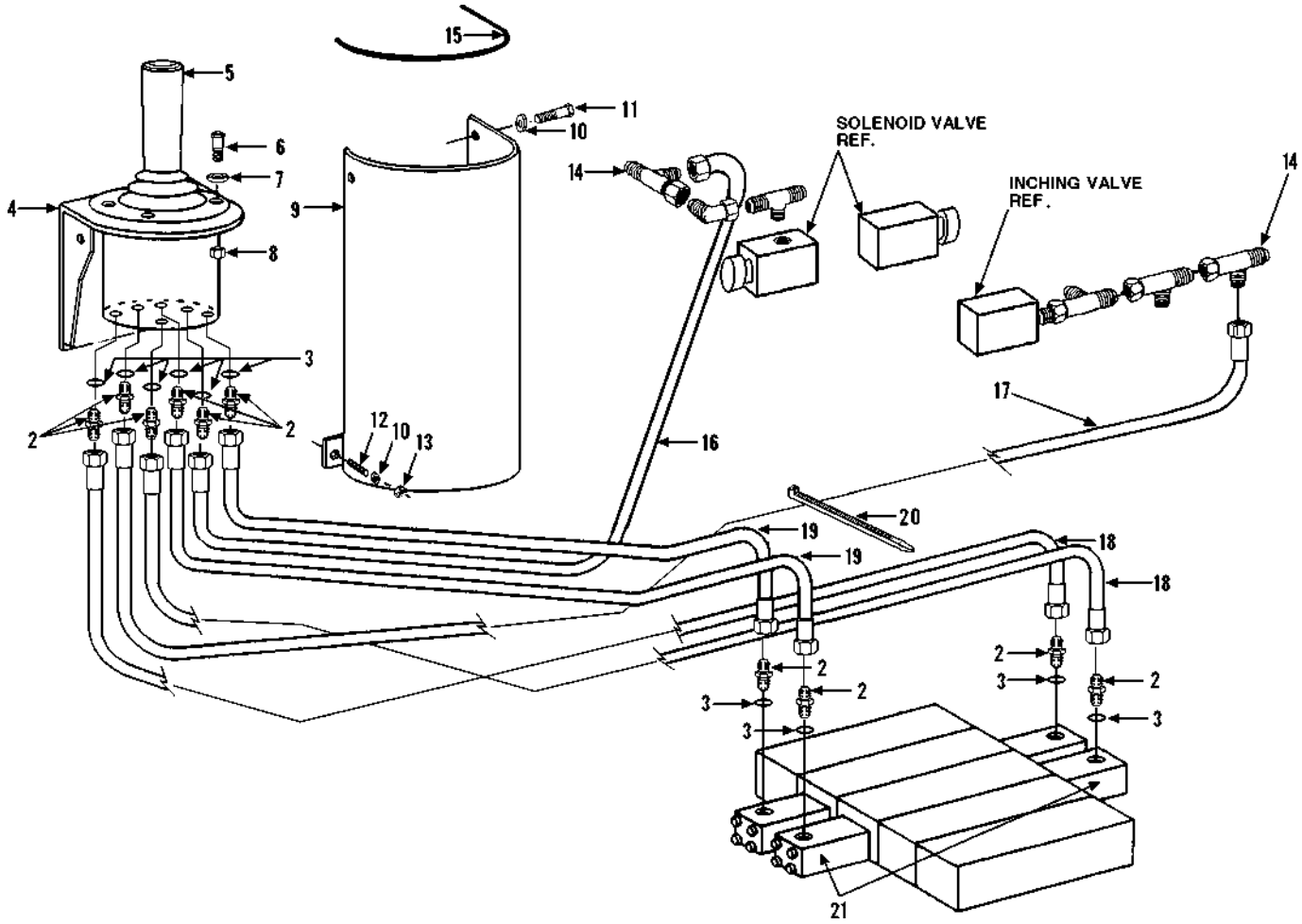

Item	Part No.	Qty.	Description Of Part
	9112-5023	1	JOYSTICK INSTALLATION ASSY (includes all items)
1	9104-3063	1	SEAT (not illustrated)
2	8866-2005	10	CONNECTOR (includes item 3)
3	8859-1204	10	O-RING
4	9112-6035	1	JOYSTICK MOUNT WELDMENT
5		Ref	JOYSTICK ASSY (see page 13-22 for details)
6	8820-1004	4	HEX HD CAPSCREW, 1/4-20X7/8, GR5
7	8855-1009	4	LOCKWASHER, 1/4
8	8850-1004	4	HEX NUT, 1/4-20
9	9104-6056	1	COVER

Item	Part No.	Qty.	Description Of Part
10	8855-1010	4	LOCKWASHER, 5/16
11	8820-1018	2	HEX HD CAPSCREW, 5/16-18X3/4, GR5
12	8505-1384	2	WELD STUD, 5/16-18
13	8850-1005	2	HEX NUT, 5/16-18
14	8866-2239	2	SWIVEL NUT RUN TEE, 3/8 TUBE
15	9020-6194	AR	TRIM LOK
16	9020-4096	1	HOSE ASSY
17	7713-3197	1	HOSE ASSY
18	8471-7458	2	HOSE ASSY
19	8471-7519	2	HOSE ASSY
20	9002-7187	AR	TIE-WRAP
21	9112-3075	2	VALVE POSITIONER KIT

** Changed upper left to designate model more clearly.*

OPTIONAL EQUIPMENT
(9112-3078) Joystick
Original Issue 3-93
Revised 9-6-02

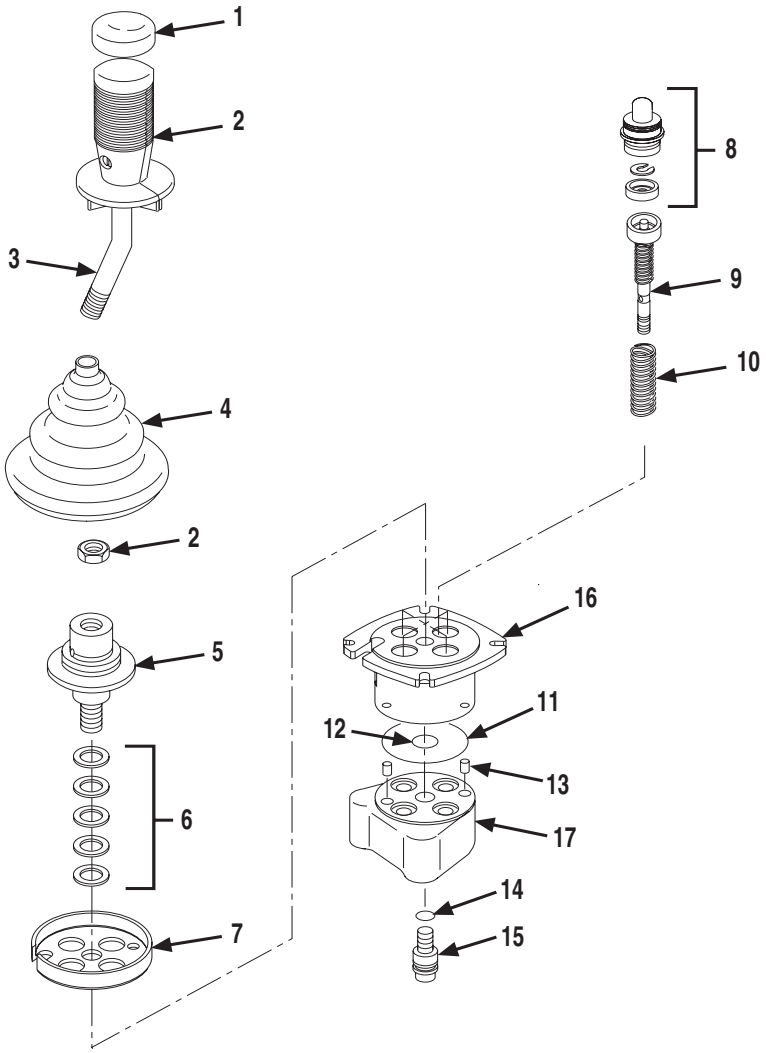

Item	Part No.	Qty.	Description Of Part
	9112-3078	1	JOYSTICK CONTROLLER, (includes all items)
	9140-4326	AR	SEAL KIT, (includes items 11 thru 15)
1	8093-4658	1	CAP
2	9112-4128	1	HANDLE GRIP KIT
3	9112-4127	1	HANDLE TUBE
4	8093-4241	1	BOOT
5	8026-4140	1	CARDAN KIT, (includes item 6)
6		AR	SHIM
7	9130-4026	1	RETAINING PLATE
8	8093-4498	4	PLUNGER & GUIDE KIT
9	9140-4327	4	REGULATING UNIT

Item	Part No.	Qty.	Description Of Part
10	8093-4259	1	SPRING, (pack of four)
11		1	O-RING
12		1	O-RING
13		2	DOWELL PIN
14		1	O-RING
15		1	SCREW
16		1	UPPER BODY
17		1	LOWER BODY
			NOTE: ONLY ITEMS WITH PART NUMBERS ARE AVAILABLE FOR SERVICE.

** Revised illustration & parts list; vendor will no longer supply individual components.*

OPTIONAL EQUIPMENT
(9103-5101) Pintle Hook Installation
Original Issue 11-93
Revised 10-16-95

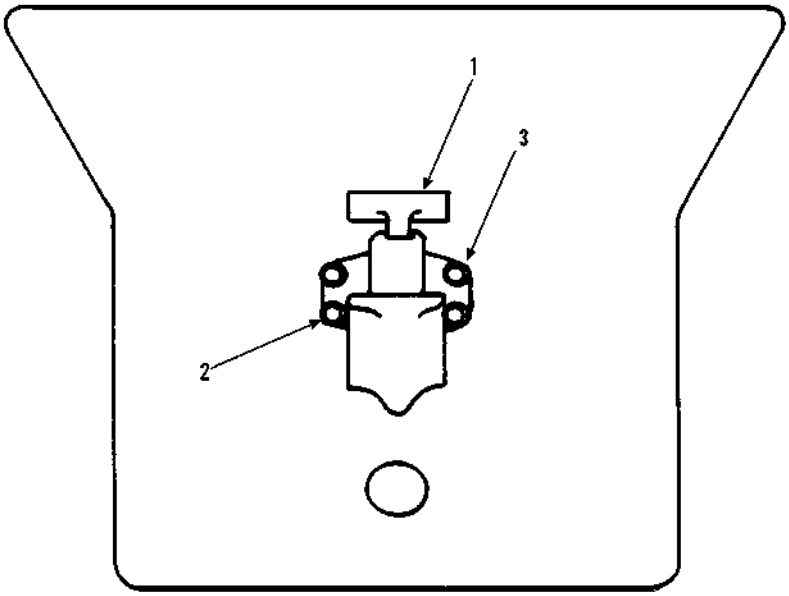

Item	Part No.	Qty.	Description Of Part
	9103-5101	Ref	PINTLE HOOK INSTALLATION (includes all items)
1	9020-0602	1	PINTLE HOOK
2	8320-1120	4	HEX HD CAPSCREW, 1/2-13X1-3/4, GR8
3	8855-1013	4	LOCKWASHER, 1/2

* *Changed upper left to designate model more clearly.*

OPTIONAL EQUIPMENT
(9108-5072) Tilt on Joystick
Original Issue 11-93
Revised 10-12-95

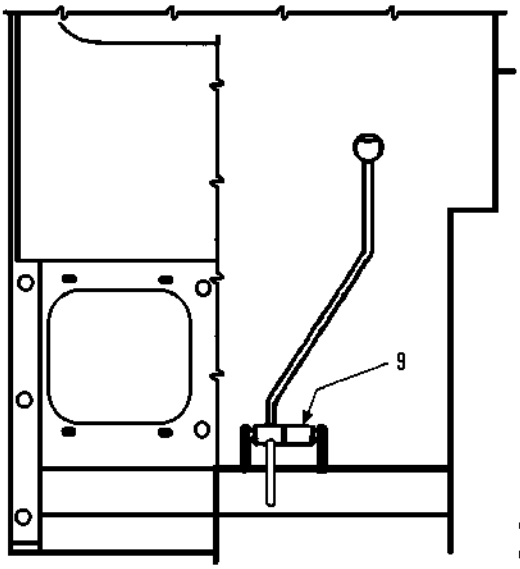

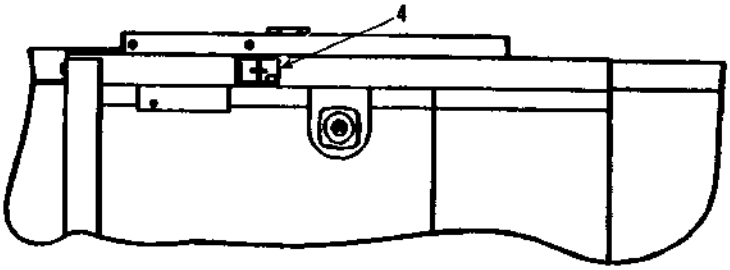

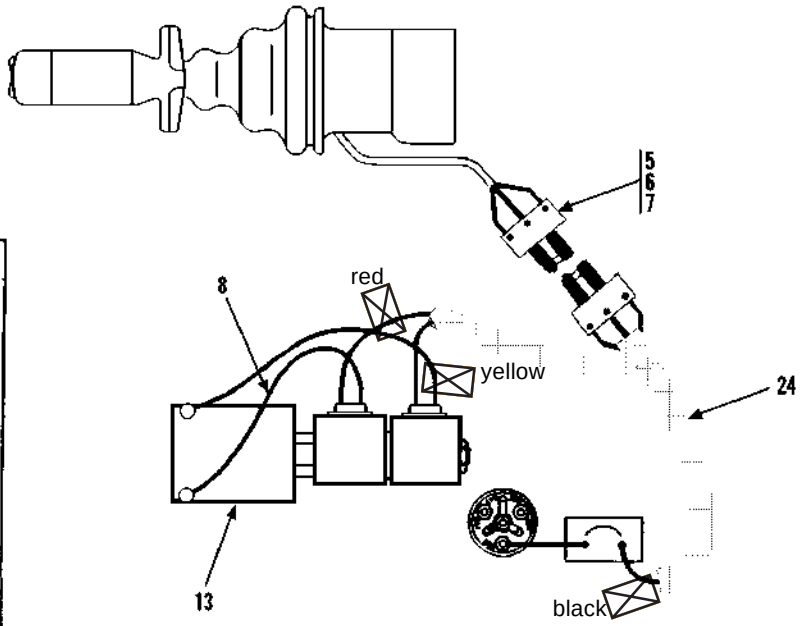

ELECTRICAL SCHEMATIC

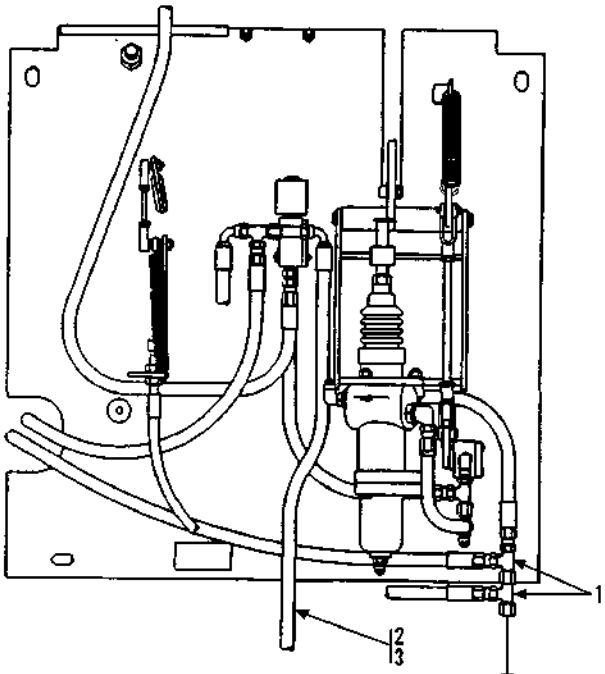

BOTTOM VIEW OF FLOOR PLATE

TO SOLENOID VALVE

WEATHER PACK SHROUD (3-WIRE) #1201-0717			
PIN DESIGNATION	A	RED	WIRE DESIGNATION
	B	YELLOW	
	C	GRAY	

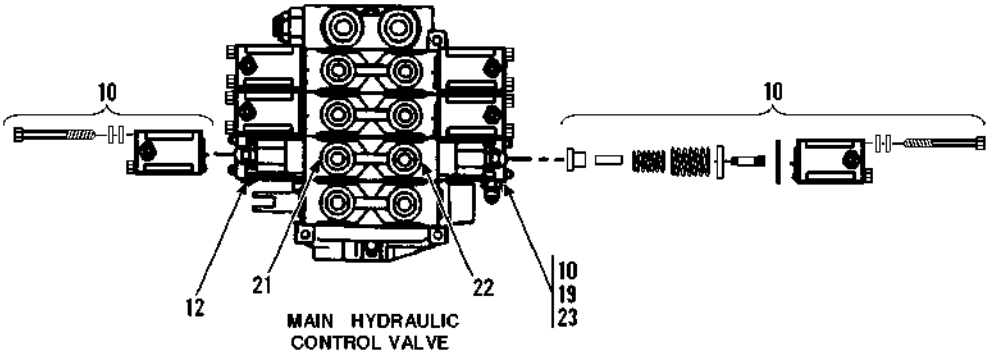

MAIN HYDRAULIC CONTROL VALVE

(SEE PAGE 10-9 FOR DETAILS)

** Changed wiring, items 5, 6, 7 & 24. Added coil to item 13.*

OPTIONAL EQUIPMENT
(9108-5072) Tilt on Joystick
Original Issue 11-93
Revised 10-12-95

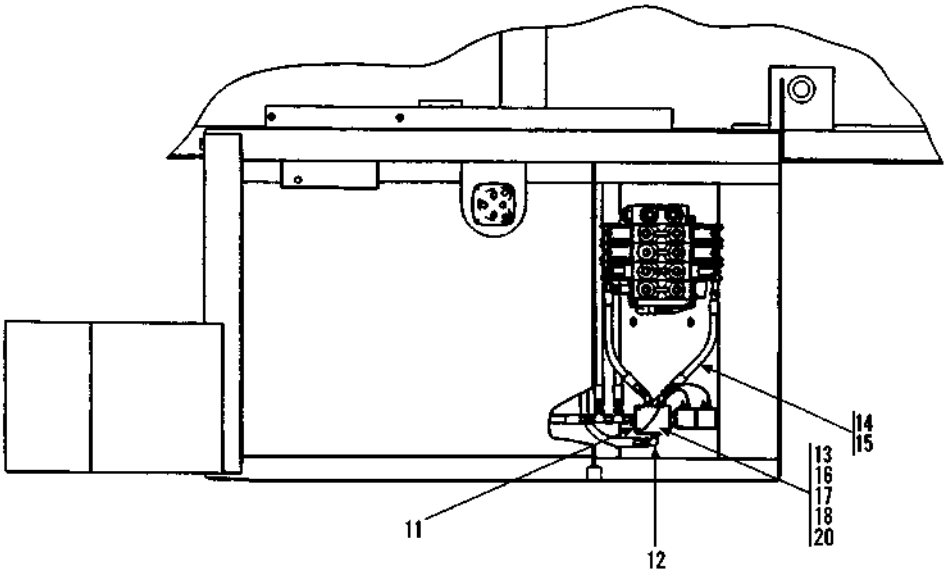

Item	Part No.	Qty.	Description Of Part
	9108-5072	Ref	TILT ON JOYSTICK (includes all items)
1	8866-2239	2	SWIVEL NUT RUN TEE, 3/8 TUBE
2	8471-8221	1	HOSE ASSY
3	9108-3212	1	MALE BRANCH TEE
4	9130-3041	1	BOOM CONTROL DECAL
* 5	8096-3060	1	WEATHER PACK SHROUD
* 6	8096-3069	3	MALE PIN TERMINAL
* 7	8096-3067	3	CABLE SEAL
8	9020-7719	2	JUMPER WIRE (green)
9	9130-1020	1	SPACER
10	9130-1064	1	HYDRAULIC VALVE POSITIONER KIT
11	9108-5071	1	MODIFIED CONNECTOR
12	8866-2064	2	ELBOW, 90 DEGREES (includes o-ring)
	8859-1204	2	O-RING

Item	Part No.	Qty.	Description Of Part
*13	9130-3038	1	SOLENOID VALVE (includes coil)
	8093-4037	1	Coil (included w/valve)
14	8866-2084	2	ELBOW, 45 DEGREES (includes o-ring)
	8859-1204	2	O-RING
15	8471-7537	2	HOSE ASSY
16	8820-1011	2	HEX HD CAPSCREW, 1/4-20X2-1/2, GR5
17	8855-1004	2	LOCKWASHER, 1/4
18	8850-1004	2	HEX NUT, 1/4-20
19	8866-2174	1	HEX HD PLUG (includes o-ring)
	8859-1204	1	O-RING
20	9130-1065	1	SPACER
21	9108-3425	1	WORK PORT RESTRICTOR (.062)
22	9108-3426	1	WORK PORT RESTRICTOR (.070)
*23	8866-2005	1	CONNECTOR (includes o-ring)
24	9130-3076	1	JOYSTICK HARNESS

** Changed wiring, items 5, 6, 7 & 24. Added coil to item 13.*

OPTIONAL EQUIPMENT
(9108-5107) Joystick Installation (Tilt On Joystick)
Starting Serial No. 0288777
Original Issue 10-95

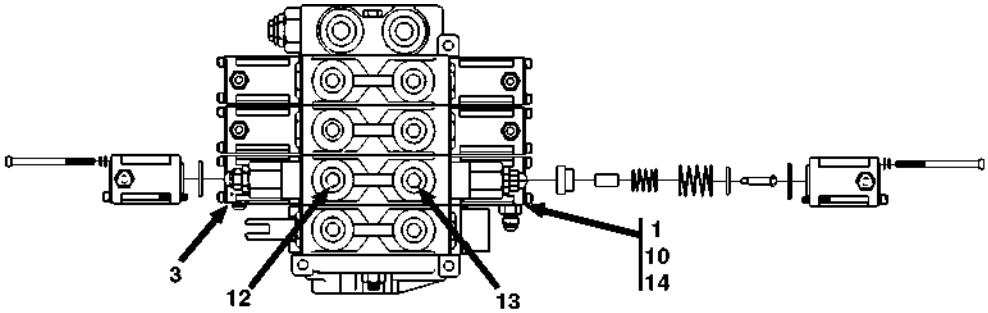

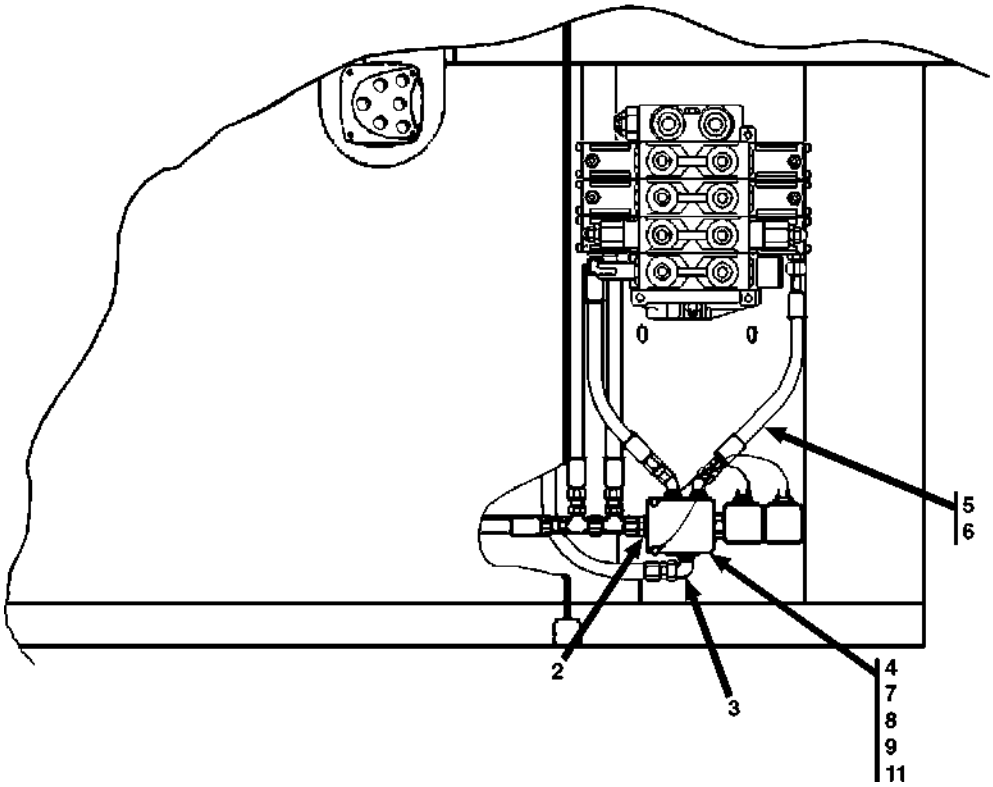

Item	Part No.	Qty.	Description Of Part
	9108-5107	Ref	TILT ON JOYSTICK (includes all items both pages)
1	9130-1064	1	HYDRAULIC VALVE POSITIONER KIT
2	9108-5071	1	MODIFIED CONNECTOR
3	8866-2064	2	ELBOW, 90 DEGREES (includes o-ring)
	8866-1204	2	O-RING
4	9130-3038	1	SOLENOID VALVE (includes coil)
	8093-4037	1	COIL (included w/valve)
5	8866-2084	2	ELBOW, 45 DEGREES (includes o-ring)
	8866-1204	2	O-RING
6	8471-7537	2	HOSE ASSY
7	8820-1011	2	HEX HD CAPSCREW, 1/4-20 x 2 1/2
8	8855-1004	2	LOCKWASHER, 1/4
9	8850-1004	2	HEX NUT, 1/4-20
10	8866-2174	1	PLUG, (includes o-ring)
	8859-1204	1	O-RING
11	9130-1065	1	SPACER
12	9108-3425	1	WORK PORT RESTRICTOR, .062
13	9108-3426	1	WORK PORT RESTRICTOR, .070
14	8866-2005	1	CONNECTOR

OPTIONAL EQUIPMENT
(9108-5107) Joystick Installation (Tilt On Joystick)
Starting Serial No. 0288777
Original Issue 10-95

BOTTOM VIEW OF FLOORPLATE

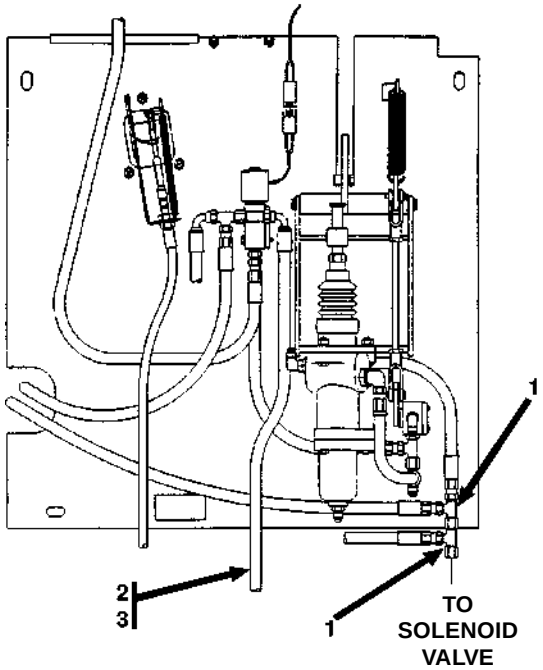

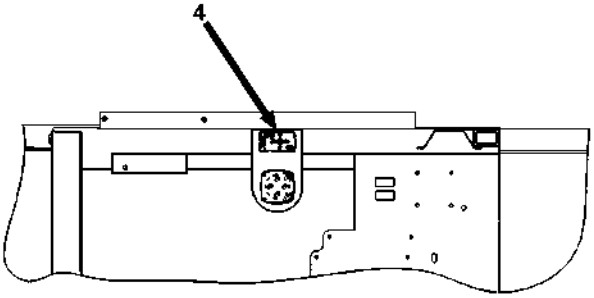

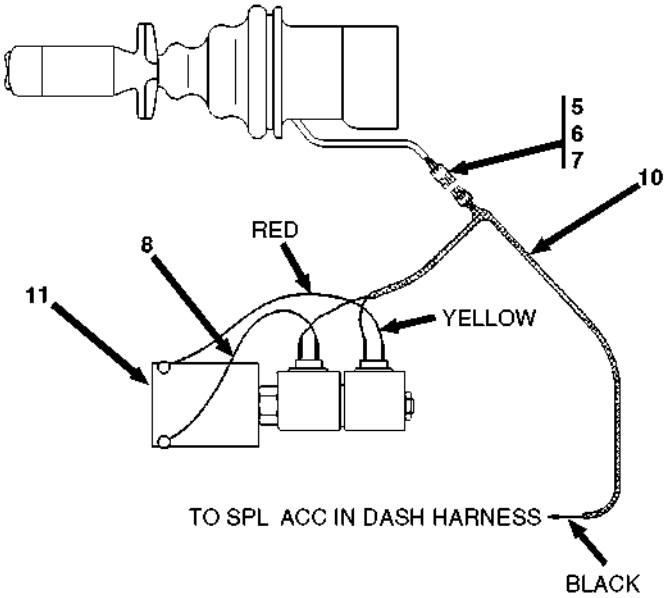

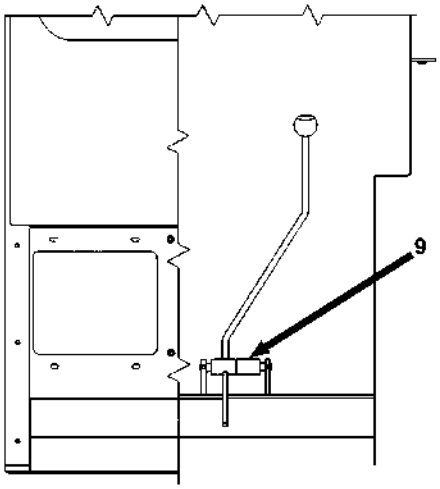

VIEW FROM BACK OF CAB

Item	Part No.	Qty.	Description Of Part
	91085107	Ref	TILT ON JOYSTICK (includes all items both pages)
1	8866-2239	2	SWIVEL NUT RUN TEE
2	8471-8221	1	HOSE ASSY
3	9108-3212	1	MALE BRANCH TEE
4	9130-3041	1	BOOM CONTROL DECAL
5	8096-3060	1	WEATHER PACK SHROUD
6	8096-3069	3	W.P. MALE PIN TERMINAL
7	8096-3067	3	W.P. CABLE SEAL
8	9020-7719	2	JUMPER WIRE, GREEN
9	9130-1020	1	SPACER
10	9108-3490	1	JOYSTICK HARNESS
11	9130-3038	Ref	SOLENOID VALVE(see previous page)
	8093-4037	1	COIL (included w/valve)

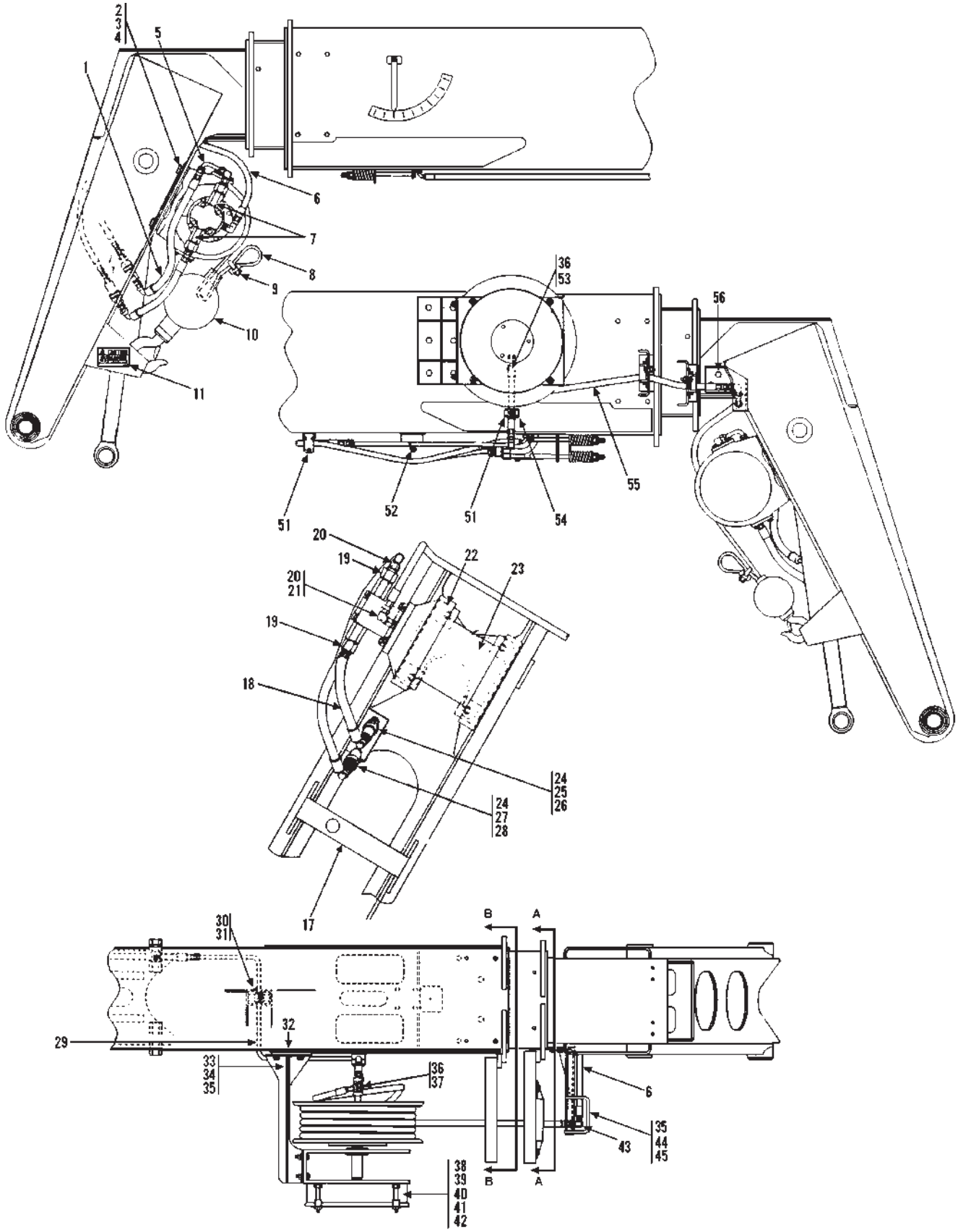
2
3
4
5
1
6
7
8
9
10
11
36
53
56
55
51
52
51
54
20
19
22
23
20
21
19
18
24
25
26
24
27
28
17
30
31
B
A
32
29
33
34
35
36
37
6
35
44
45
43
38
39
40
41
42
B
A

OPTIONAL EQUIPMENT
(9112-5022) Winch Installation
Original Issue 1-94
Revised 7-26-06

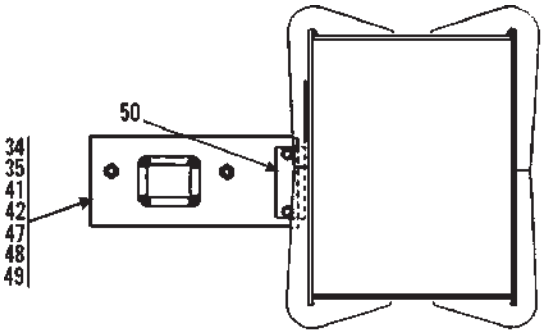

VIEW B-B

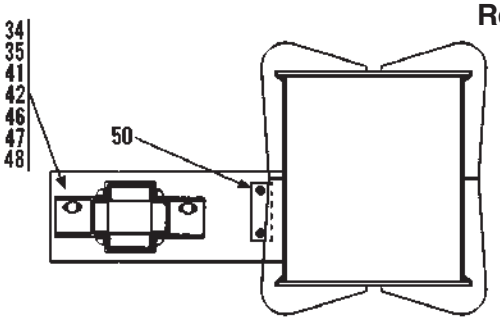

VIEW A-A

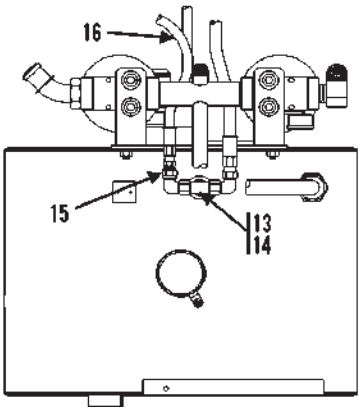

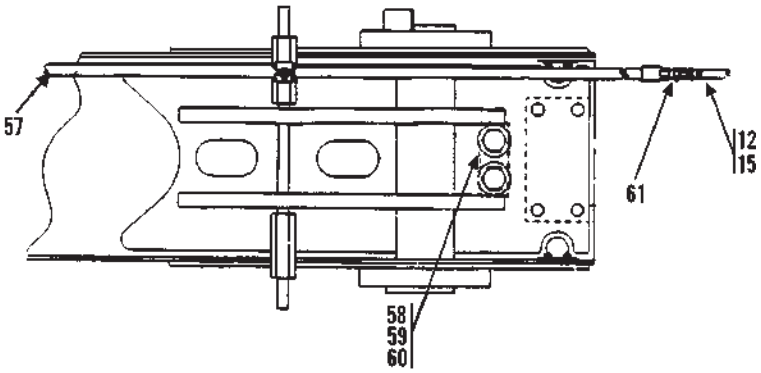

Item	Part No.	Qty.	Description Of Part
	9112-5022	1	WINCH INSTALLATION, (includes all items)
1	8471-8548	1	HOSE ASSY
2	8850-1008	4	HEX NUT, 1/2-13
3	9002-7471	8	HARDENED WASHER, 1/2
4	8820-1071	4	HEX HD CAPSCREW, 1/2-13X2-1/2, GR5
5	9112-3022	1	LONG ELBOW, 90 DEGREES, 1/2 TUBE
6	8471-8145	1	HOSE ASSY
7	9103-3161	2	FLOW REGULATOR
8	9020-7882	1	CABLE
9	9002-8990	1	WIRE ROPE CLIP
10	9020-1443	1	HOOK & BALL
11	9108-3535	1	CAUTION DECAL
12	9108-3217	1	CUSHION CLAMP
13	8866-2224	1	SWIVEL NUT BRANCH TEE, 3/8 TUBE
14	8866-2105	2	MALE ELBOW, 90 DEGREES, (swivel nut)
15	8471-6359	1	HOSE ASSY
16	9002-7187	4	TIE WRAP
17	9112-1159	1	STOWAGE BRACKET
18	8471-8159	1	HOSE ASSY
19	9103-3230	2	TUBE END REDUCER
20	8866-2106	2	ELBOW, 90 DEGREES (swivel nut)
21	8866-1011	1	MALE CONNECTOR, 1/2 TUBE
22	9136-3079	1	WINCH
23	9112-1158	1	WINCH MOUNTING PLATE
24	8866-1013	2	MALE CONNECTOR, 1/2X1/2 TUBE
25	9116-3139	1	FEMALE COUPLER
26	9104-3125	1	DUST PLUG
27	9116-3138	1	MALE COUPLER
28	9104-3126	1	DUST CAP
29	9112-3073	1	TUBE ASSY

Item	Part No.	Qty.	Description Of Part
30	9112-1160	1	CLAMP SPACER
31	9020-6089	1	ANCHOR CHANNEL
32	9104-1261	1	SINGLE REEL MOUNTING BRACKET
33	9108-6143	1	SINGLE REEL BRACKET
34	8820-1064	10	HEX HD CAPSCREW, 1/2-13X7/8, GR5
35	8855-1013	12	LOCKWASHER, 1/2
36	8866-1013	2	MALE CONNECTOR, 1/2 TUBE
37	8866-2120	1	ELBOW, 45 DEGREES, (swivel nut)
38	9104-3165	1	SINGLE HOSE REEL
39	8820-1037	4	HEX HD CAPSCREW, 3/8-16X1-1/2, GR5
40	8856-1004	4	FLAT WASHER, 3/8
41	8855-1011	12	LOCKWASHER, 3/8
42	8850-1006	12	HEX NUT, 3/8-16
43	9002-7180	1	ELBOW, 90 DEGREES, 1/2 TUBE
44	9108-6144	1	HOSE SUPPORT
45	8820-1065	2	HEX HD CAPSCREW, 3/8-16X1-1/4, GR5
46	9136-1036	1	ROLLER SUPPORT
47	9136-3186	2	ROLLER ASSY
48	8820-1036	8	HEX HD CAPSCREW, 1/2-13X2, GR5
49	9136-1037	1	ROLLER SUPPORT
50	9112-1161	2	SUPPORT MOUNTING BLOCK
51	9020-7463	4	CUSHION CLAMP
52	9108-3216	1	CUSHION CLAMP
53	8471-8314	1	HOSE ASSY
54	9102-1094	1	CHANNEL
55	8471-8147	1	HOSE ASSY
56	9112-1162	1	SUPPORT MOUNTING PAD
57	8471-8149	1	HOSE ASSY
58	9112-1163	1	RETRACTION RESTRICTOR
59	9002-7475	2	HARDENED WASHER
60	8320-1053	2	HEX HD CAPSCREW, 1-8X3, GR8
61	8866-1064	1	UNION, 3/8 TUBE

** Revised illustration & parts list.*

OPTIONAL EQUIPMENT
(9104-3353) Engine Block Heater

Original Issue 6-94
Revised 10-16-95

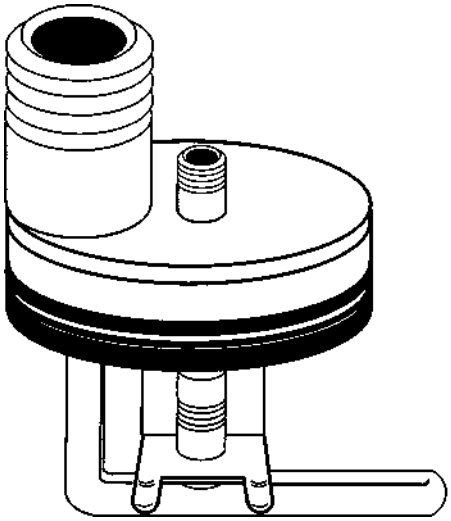

REPLACES FROST PLUG ON RIGHT SIDE OF ENGINE.

Item	Part No.	Qty.	Description Of Part
	9104-3353	1	BLOCK HEATER

**Changed upper left to designate model more clearly.*

OPTIONAL EQUIPMENT
(9112-5044) L. H. SWAY CONTROL
Original Issue 1-95
Revised 10-13-95

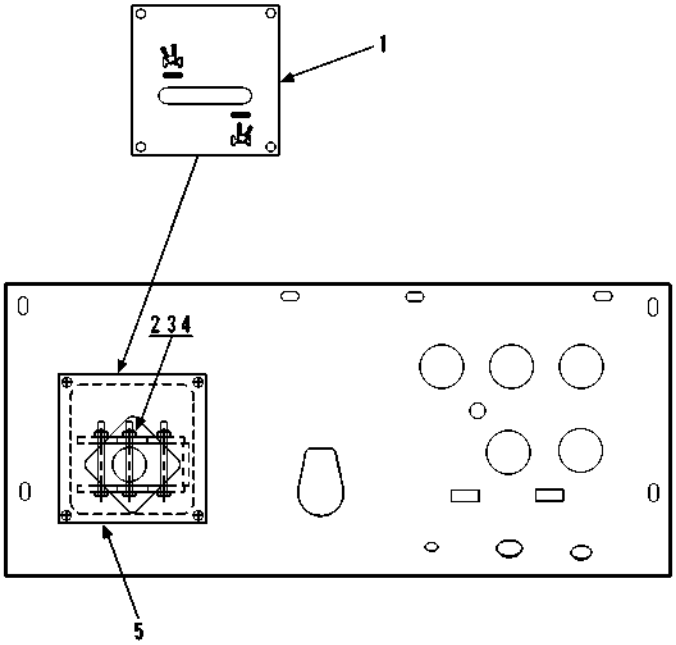

VIEW A - A

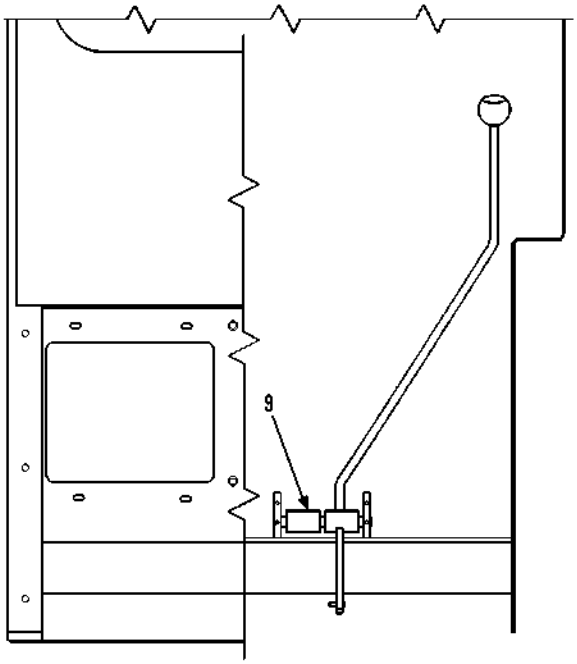

REAR VIEW OF CAB

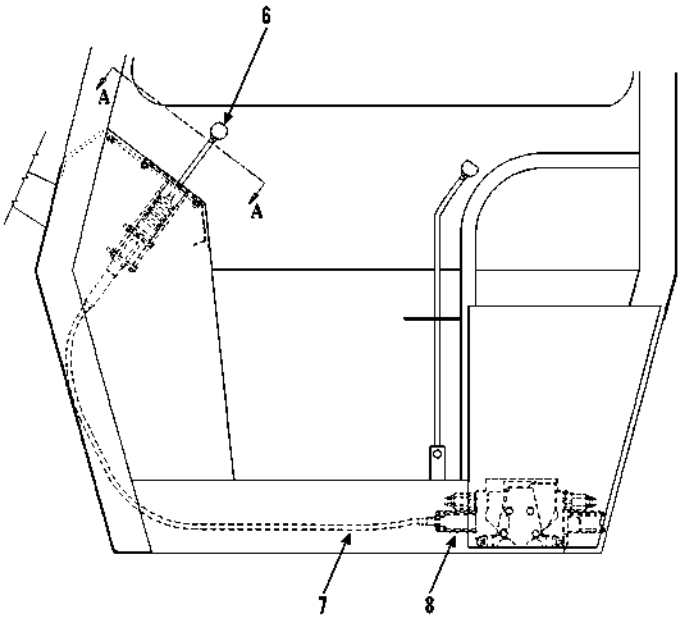

Item	Part No.	Qty.	Description Of Part
	9112-5044	Ref	L.H. SWAY CONTROL (includes all items)
1	9112-3105	1	SWAY CONTROL PLATE
2	8820-1510	3	HEX HD CAPSCREW, 1/4-28X2-1/2
3	8855-1009	3	LOCKWASHER, 1/4
4	8850-1304	3	HEX NUT, 1/4-28
5	9112-6040	1	BRACKET
6	9130-3019	1	REMOTE VALVE CONTROL
7	9108-3393	1	CONTROL CABLE
8	9112-3062	1	CABLE ADAPTER
9	9130-1020	1	SPACER

** Changed upper left to designate model more clearly.*

OPTIONAL EQUIPMENT
(9112-5054) Thermal Bypass
Original Issue 12-96
Revised 4-4-97

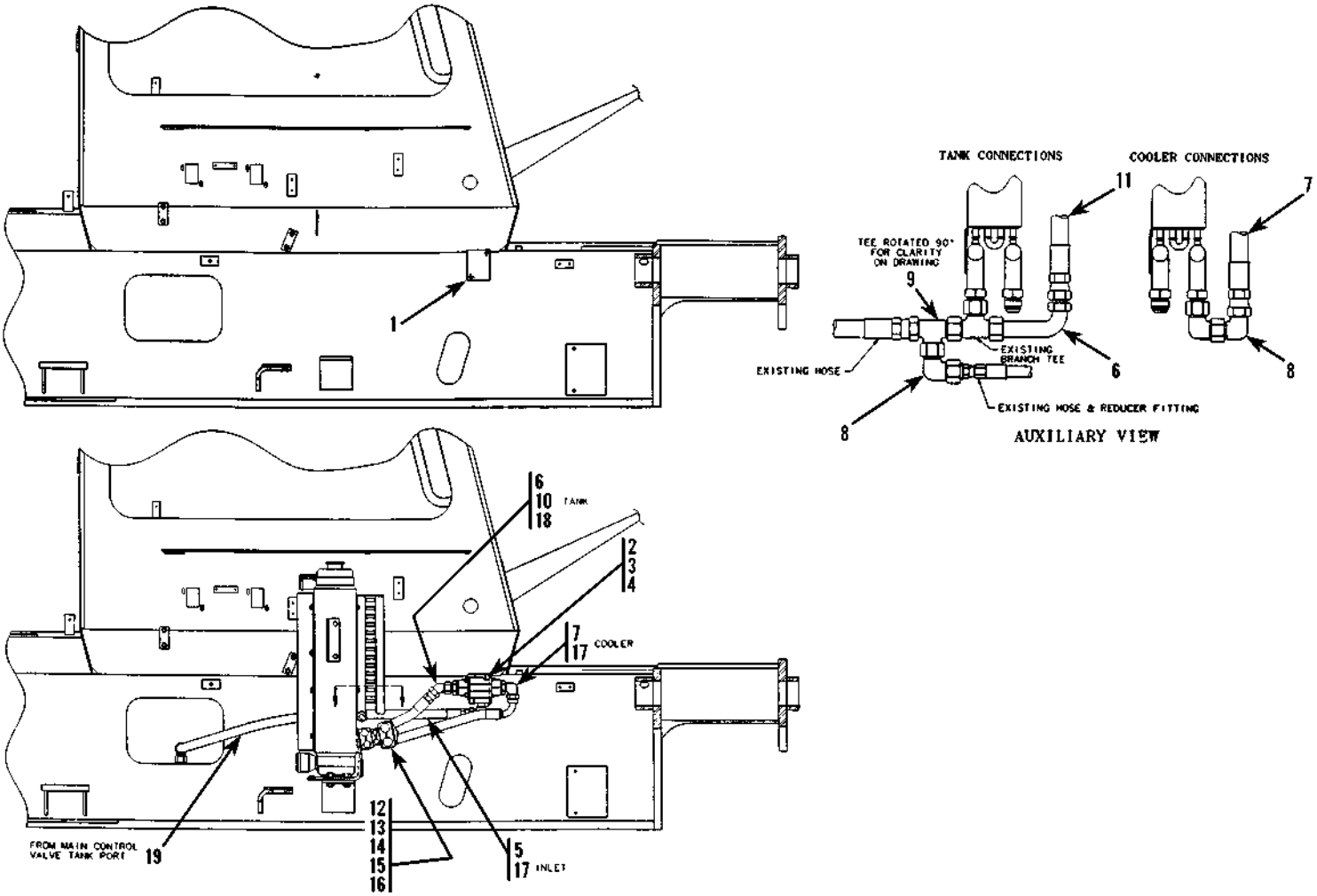

Item	Part No.	Qty.	Description Of Part
	9112-5054	1	THERMAL BYPASS (extreme cold), (includes all items)
1	9112-1221	1	TAPPED BLOCK
* 2	9114-3338	1	THERMAL BYPASS VALVE
3	8820-1044	2	HEX HD CAPSCREW, 3/8-16X3 1/4, GR5
4	8855-1011	2	LOCKWASHER, 3/8
5	8471-7571	1	HOSE ASSY
6	8471-6029	1	HOSE ASSY
7	8471-6397	1	HOSE ASSY
8	8866-2108	3	ELBOW, 90 DEGREES (swivel nut)
9	8866-2242	1	SWIVEL NUT RUN TEE, 3/4 TUBE
10	8866-2122	1	ELBOW, 45 DEGREES (swivel nut)

Item	Part No.	Qty.	Description Of Part
11	8366-1260	1	TUBE FITTING, 90 DEGREES
12	7713-3133	1	STAUFF CLAMP
13	7713-3390	1	SAFETY CLIP
14	7713-3134	1	COVER PLATE
15	8820-1024	1	HEX HD CAPSCREW, 5/16-18X2, GR5
16	7713-3389	1	STACK BOLT
17	8866-2061	2	ELBOW, 90 DEGREES (includes o-ring)
	8859-1209	2	O-RING
18	8866-2025	1	CONNECTOR (includes o-ring)
	8859-1209	1	O-RING
19	8471-7906	-1	HOSE ASSY (remove from std. assy)

** Changed part number on item 2.*

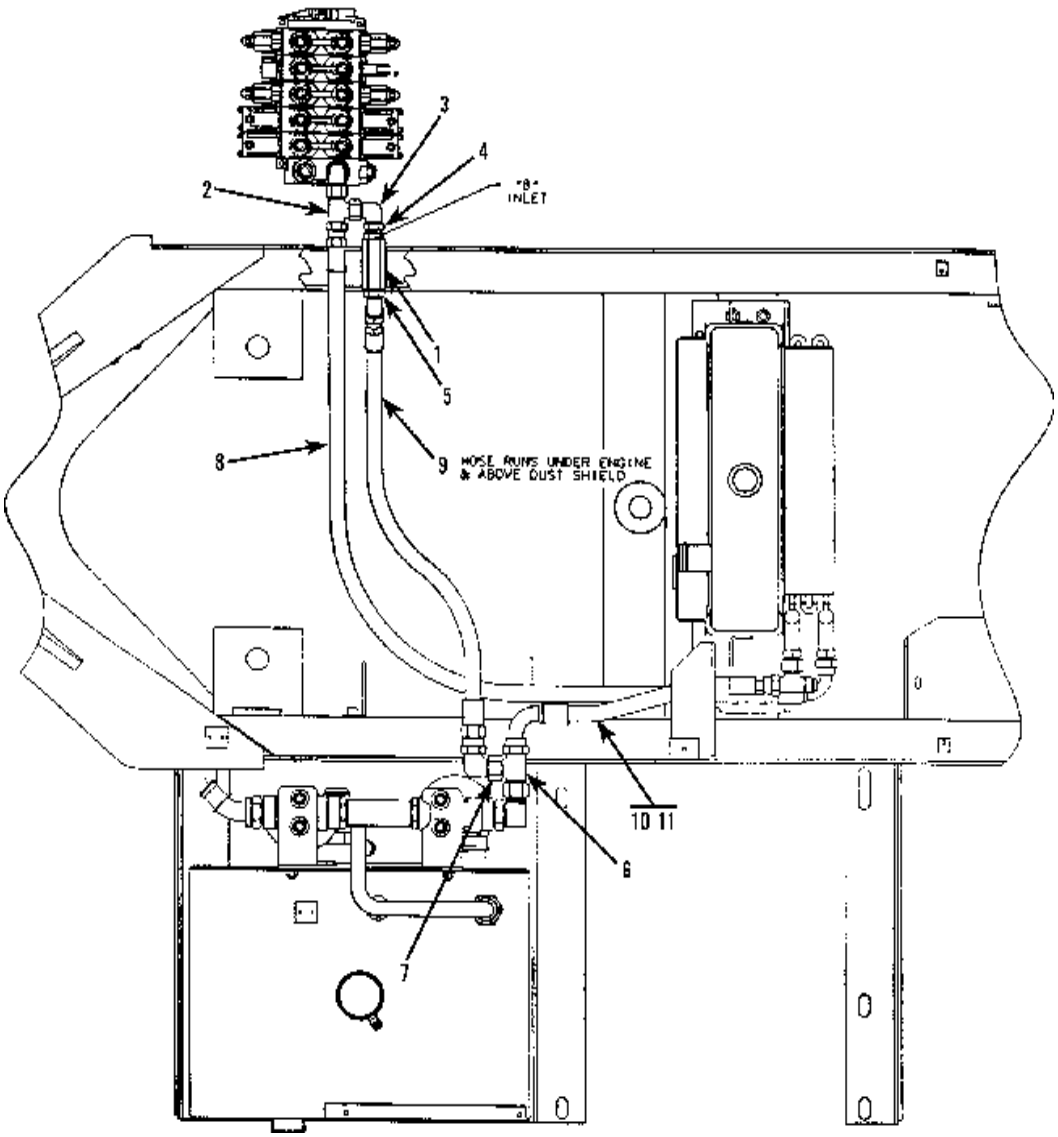

Item	Part No.	Qty.	Description Of Part
	9112-5056	1	INLINE BYPASS (includes all items)
1	9116-3191	1	INLINE VALVE
2	8866-2242	1	SWIVEL NUT RUN TEE, 3/4 TUBE
3	8866-2108	1	ELBOW, 90 DEGREES (swivel nut)
4	9116-3121	1	STRAIGHT THREAD ADAPTER, (includes o-ring)
	8859-1207	1	O-RING
5	8866-2087	1	ELBOW, 45 DEGREES (includes o-ring)
	8859-1207	1	O-RING
6	8866-2244	1	SWIVEL NUT RUN TEE, 1" TUBE
7	8866-2110	1	ELBOW, 90 DEGREES (swivel nut)
8	8471-7906	1	HOSE ASSY (included in standard machine assy)
9	8471-8925	1	HOSE ASSY
10	8471-8926	1	HOSE ASSY
11	8471-7872	-1	HOSE ASSY (remove from std. build)

OPTIONAL EQUIPMENT
(9132-5011) Inline Bypass - 534C-6 TURBO
Starting Serial No.0388043
Original Issue 12-96

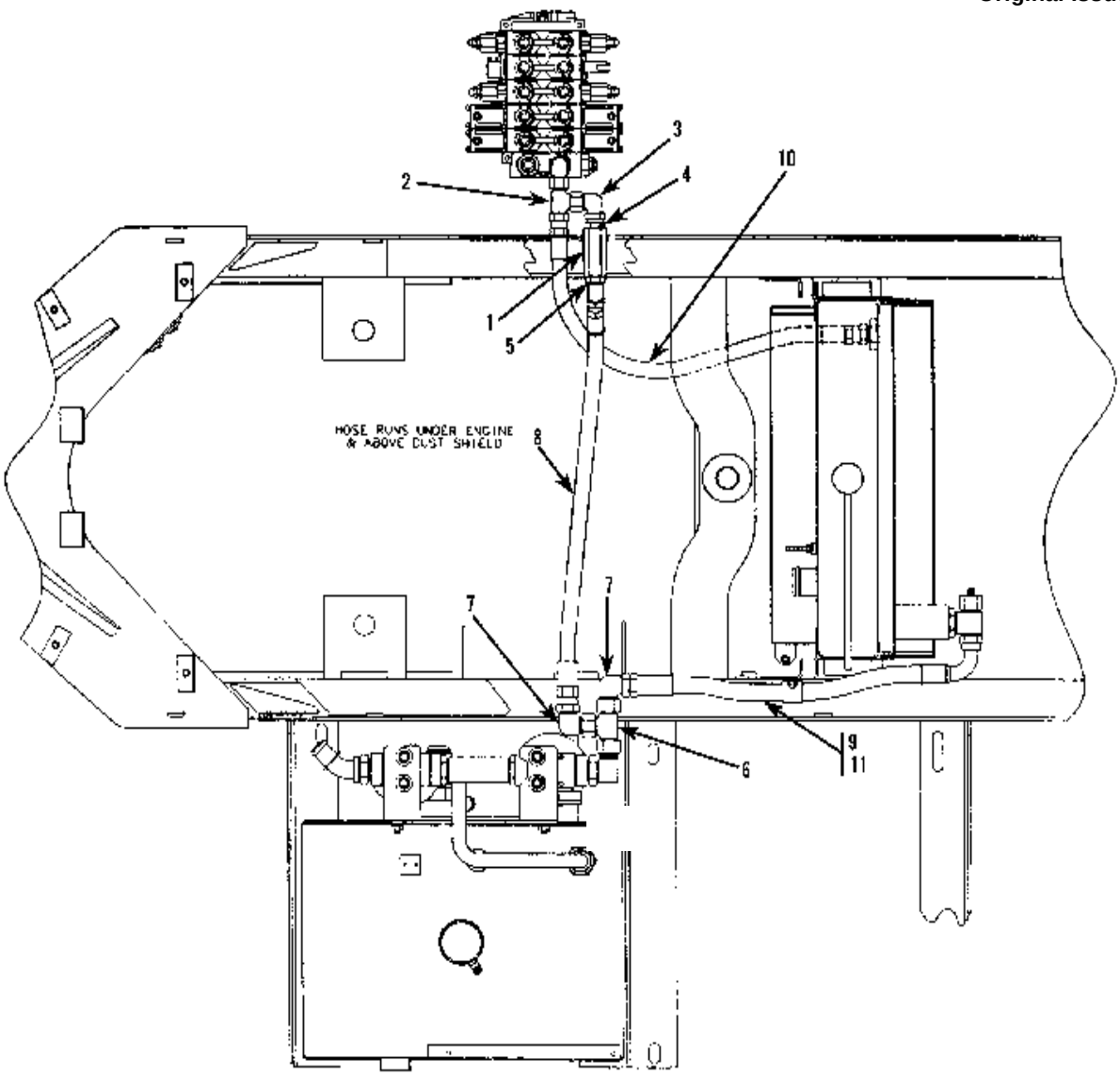

Item	Part No.	Qty.	Description Of Part
	9132-5011	1	INLINE BYPASS - 534C-6 TURBO, (includes all items)
1	9116-3191	1	INLINE VALVE
2	8866-2242	1	SWIVEL NUT RUN TEE, 3/4 TUBE
3	8866-2108	1	ELBOW, 90 DEGREES (swivel nut)
4	9116-3121	1	STRAIGHT THREAD ADAPTER, (includes o-ring)
	8859-1207	1	O-RING
5	8866-2087	1	ELBOW, 45 DEGREES, (includes o-ring)
	8859-1207	1	O-RING
6	8866-2244	1	SWIVEL NUT RUN TEE, 1" TUBE
7	8866-2110	2	ELBOW, 90 DEGREES (swivel nut)
8	8471-8925	1	HOSE ASSY
9	8471-8912	1	HOSE ASSY
10	8471-8643	1	HOSE ASSY (included in standard machine assy)
11	8471-8644	-1	HOSE ASSY (remove from standard assy)

1. INSTALL BLANKET AFTER PAINT ONLY.
2. BLANKET TO BE INSTALLED ON HYDRAULIC TANK WALL, BETWEEN HYDRAULIC TANK AND FUEL TANK.
3. POSITION BLANKET AS CLOSE TO CENTER OF TANK AS POSSIBLE.
4. STOW AWAY ELECTRICAL CORD BETWEEN TANKS.

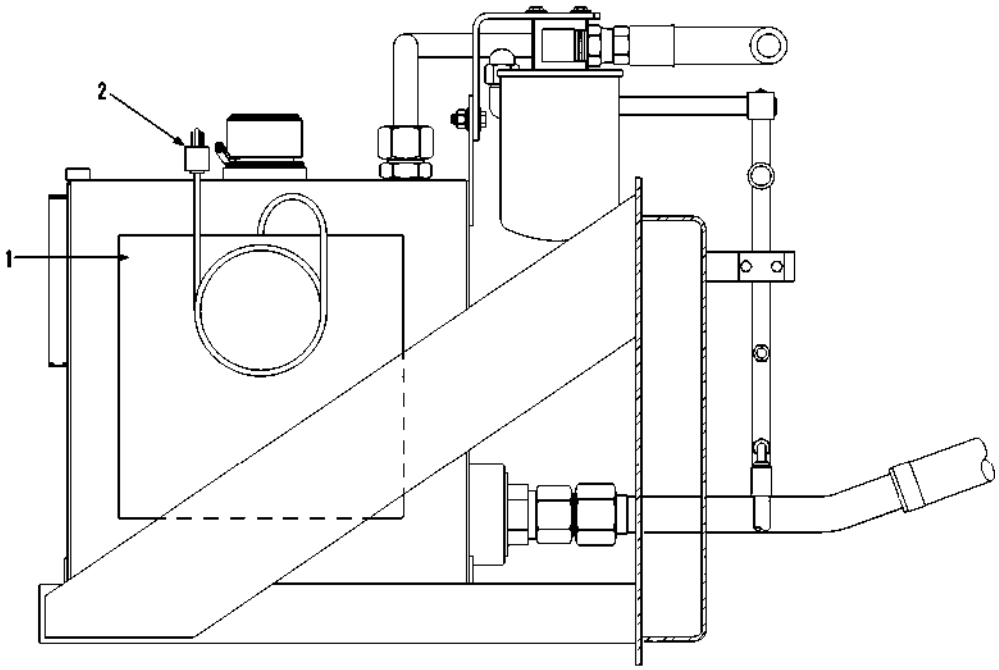

SECTION VIEW THRU FRAME SHOWING INSIDE WALL OF HYDRAULIC TANK

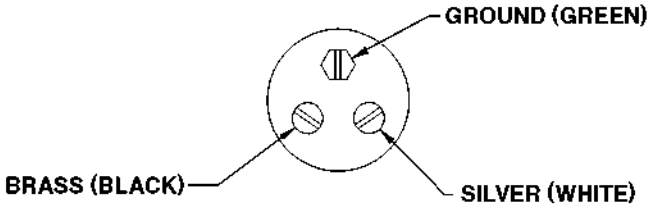

Item	Part No.	Qty.	Description Of Part
	9108-5073	1	HYDRAULIC RESERVOIR HEATER (includes all items)
1	9108-3429	1	HEATING BLANKET
2	9108-3430	1	PLUG

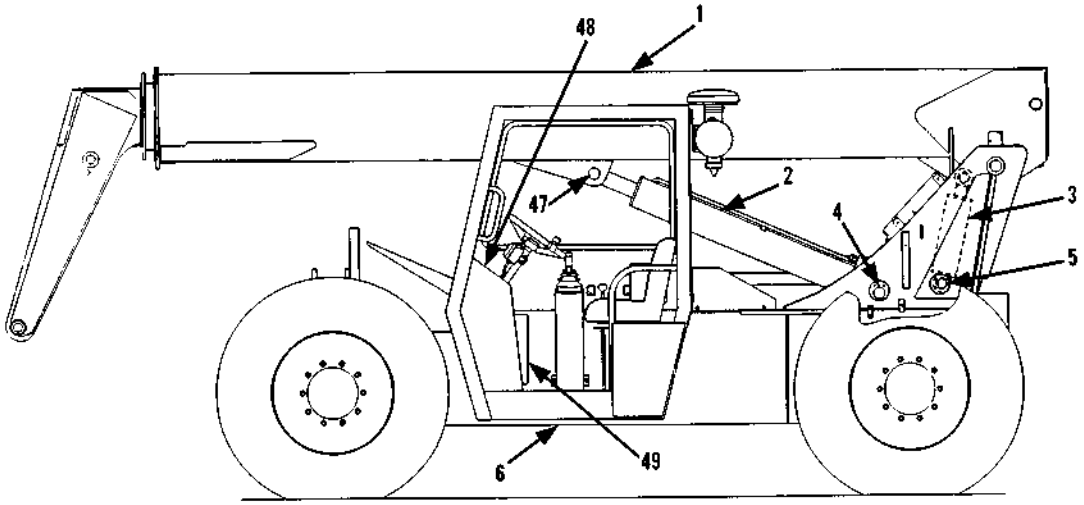

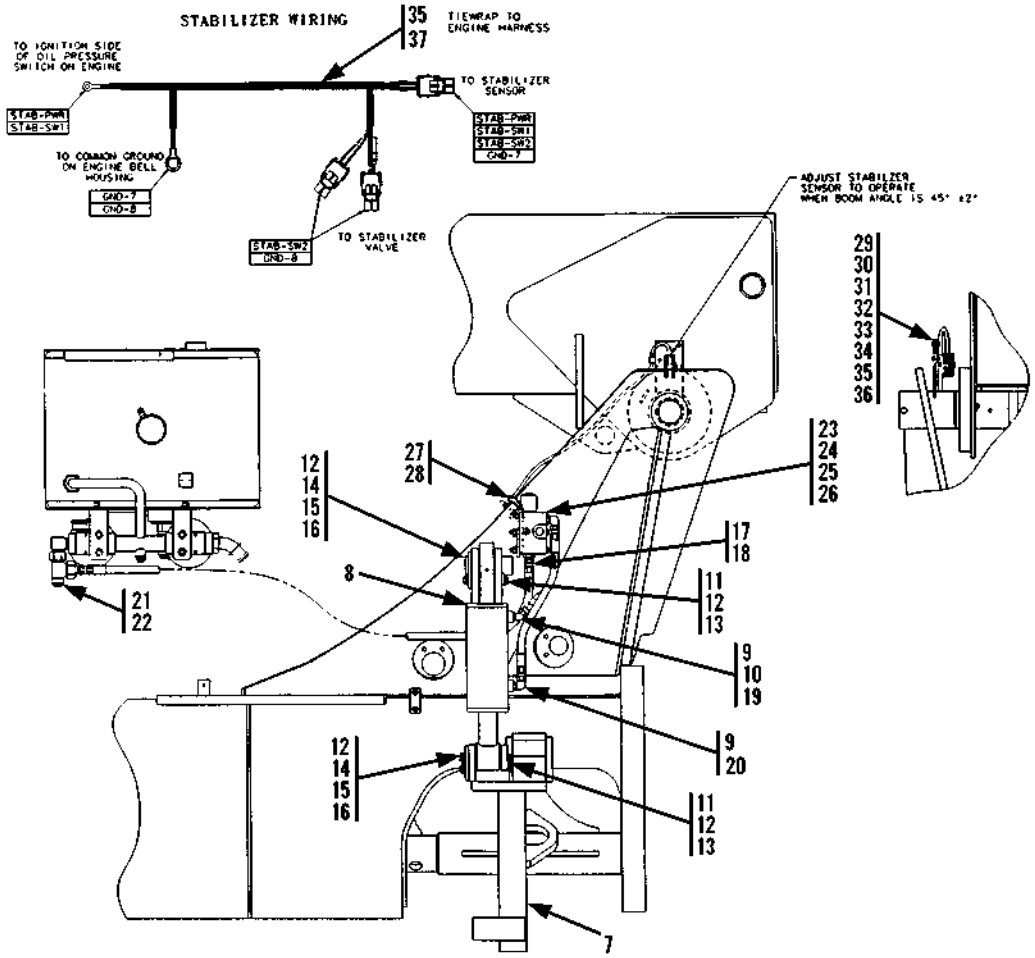

*Added additional part number and serial number break to item 6

OPTIONAL EQUIPMENT
(9112-5072) 42' Boom Option

Original Issue 5-97
Revised 2-9-98

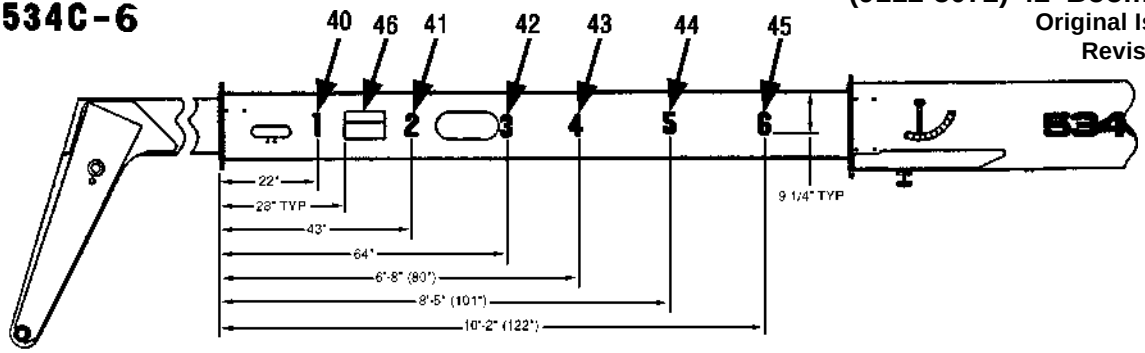

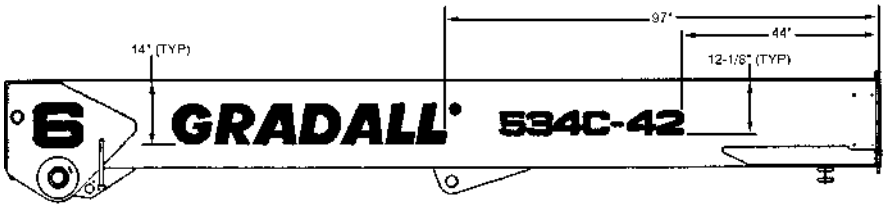

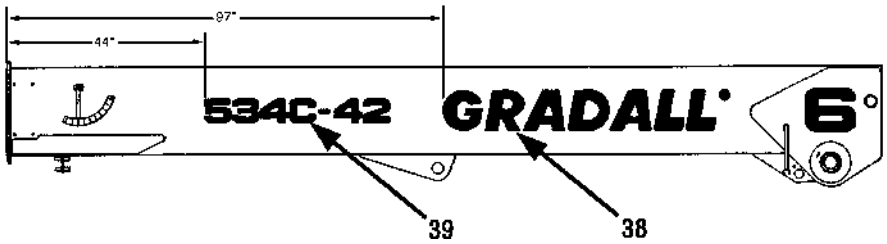

Item	Part No.	Qty.	Description Of Part
	9112-5072	1	42' BOOM OPTION (includes all items)
1		Ref	42' BOOM ASSY (see page 13-33)
2		Ref	LIFT CYLINDER (see page 13-34)
3		Ref	COMPENSATING CYLINDER (see page 13-36)
4	9112-1273	1	LIFT CYLINDER PIN
5	9112-1274	1	COMPENSATING CYLINDER PIN
* 6	9132-6017	1	FRAME WELDMENT
	9112-6079	1	FRAME WELDMENT (starting S/N 0488154)
7	9116-6013	1	REAR AXLE WELDMENT
8		Ref	STABILIZER CYLINDER (see page 13-35)
9	8866-2065	3	ELBOW, 90 DEGREES (includes o-ring)
	8859-1205	3	O-RING
10	8866-2085	1	ELBOW, 45 DEGREES (includes o-ring)
	8859-1205	1	O-RING
11	9116-1269	2	KEEPER
12	8856-1111	6	WASHER, 1/2
13	8820-1065	2	HEX HD CAPSCREW 1/2-13X1, GR5
14	9116-6062	2	PIN WELD
15	8820-1066	4	HEX HD CAPSCREW, 1/2-13X1-1/4, GR5
16	8855-1013	4	LOCKWASHER, 1/2
17	8866-2019	1	CONNECTOR (includes o-ring)
	8859-1206	1	O-RING
18	8471-8287	1	HOSE ASSY
19	8471-8989	1	HOSE ASSY
20	7713-3145	1	HOSE ASSY
21	8866-2244	1	SWIVEL NUT RUN TEE, 1" TUBE
22	9103-3230	1	TUBE END REDUCER
23	8820-1047	2	HEX HD CAPSCREW 3/8-16X4, GR5
24	8855-1011	2	LOCKWASHER, 3/8

Item	Part No.	Qty.	Description Of Part
25	8850-1006	2	HEX NUT, 3/8-16
26		Ref	STABILIZER VALVE (see page 13-37)
27	8662-1230	2	SUPPORT CLAMP
28	7714-3006	2	WHIZ-LOCK NUT, 5/16
29		Ref	STABILIZER SENSOR ASSY (see page 13-38)
30	9114-1260	1	BRACKET
31	8830-1093	2	ROUND HD MACHINE SCREW, #10-24X3/4
32	8855-1007	2	LOCKWASHER, #10
33	8856-1001	4	WASHER, 3/16
34	9104-3199	2	SQUARE NUT, #10-24
35	9002-7187	8	TIE WRAP
36	9002-1705	1	SUPPORT CLAMP
37	9116-3049	1	STABILIZER HARNESS
38	9112-3037	2	GRADALL DECAL (std)
	9112-3038	2	GRADALL DECAL (opt)
39	9112-3169	2	534C-42 DECAL (std)
	9112-3173	2	534C-42 DECAL (opt)
40	9100-3016	1	"1" DECAL (std)
	9104-3134	1	"1" DECAL (opt)
41	9100-3018	1	"2" DECAL (std)
	9104-3135	1	"2" DECAL (opt)
42	9112-3042	1	"3" DECAL (std)
	9112-3043	1	"3" DECAL (opt)
43	9100-3020	1	"4" DECAL (std)
	9104-3136	1	"4" DECAL (opt)
44	9112-3044	1	"5" DECAL (std)
	9112-3045	1	"5" DECAL (opt)
45	9116-3077	1	"6" DECAL (std)
	9116-3078	1	"6" DECAL (opt)
46	7702-3009	2	HOLE WARNING DECAL
47	9112-1290	1	LIFT CYLINDER PIN
48	9112-3170	1	534C6-42 CAPACITY CHART
49	9112-3171	1	534C6-42 S/N & ATTACH. PLATE

**Added additional part number and serial number break to item 6*

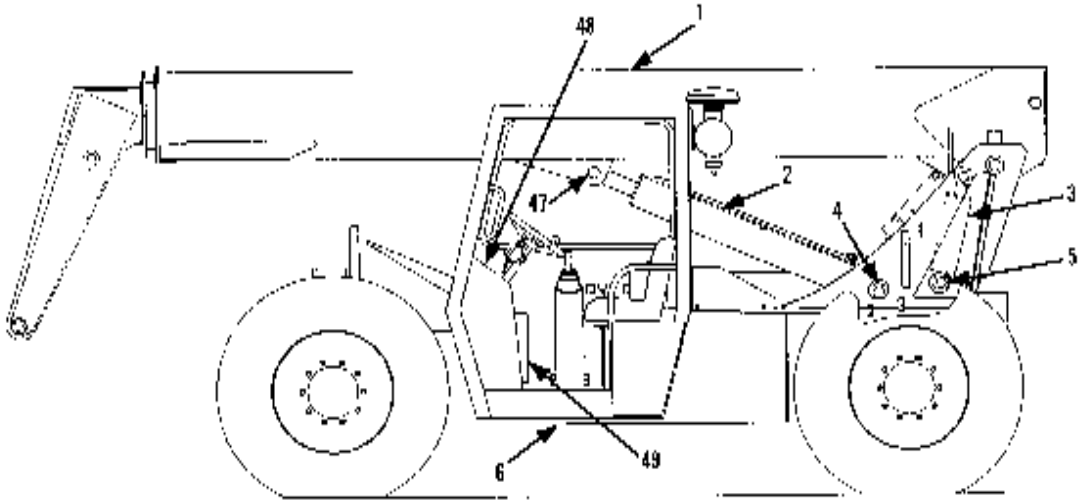
1
48
2
47
4
3
5
6
49

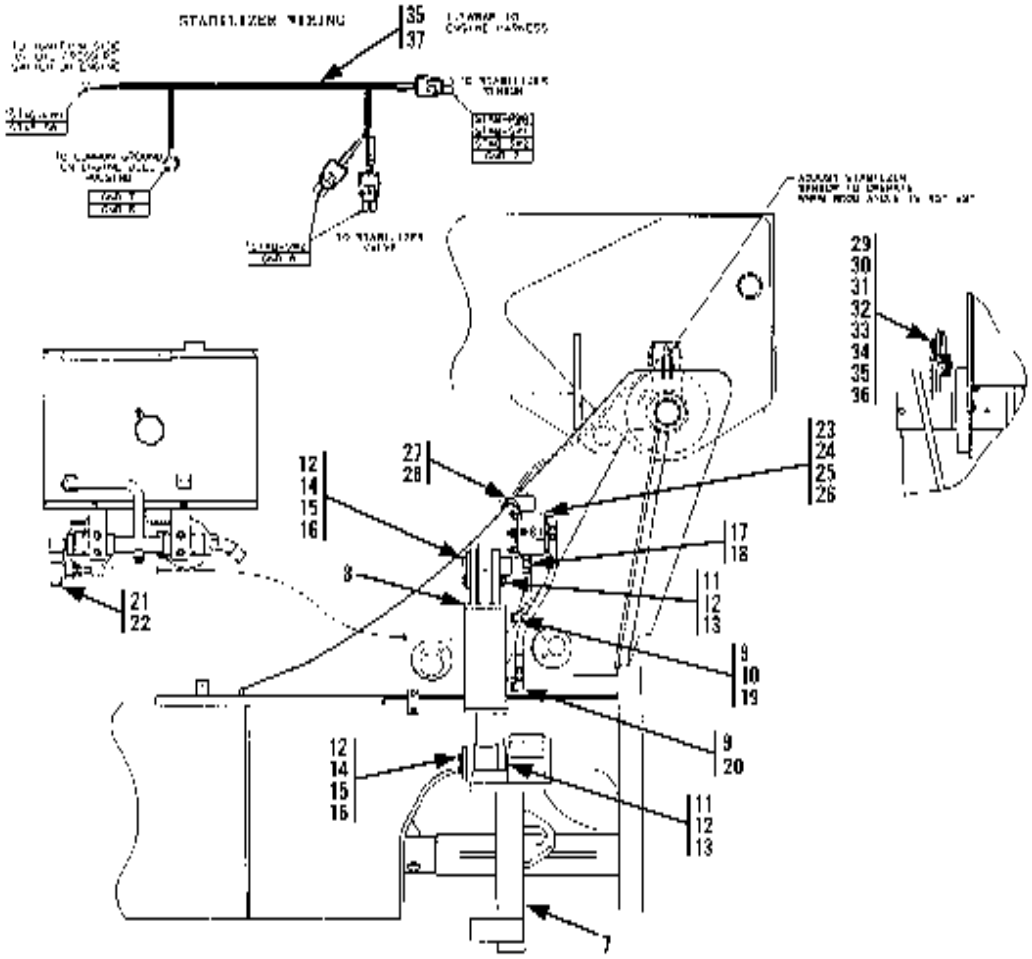
STABILIZER WIRING
35
37
29
30
31
32
33
34
35
36
23
24
25
26
27
28
12
14
15
16
17
18
8
11
12
13
21
22
9
10
19
9
20
12
14
15
16
11
12
13
7

OPTIONAL EQUIPMENT
(9132-5019) 42' Boom Option *(TURBO)*
Original Issue 5-97

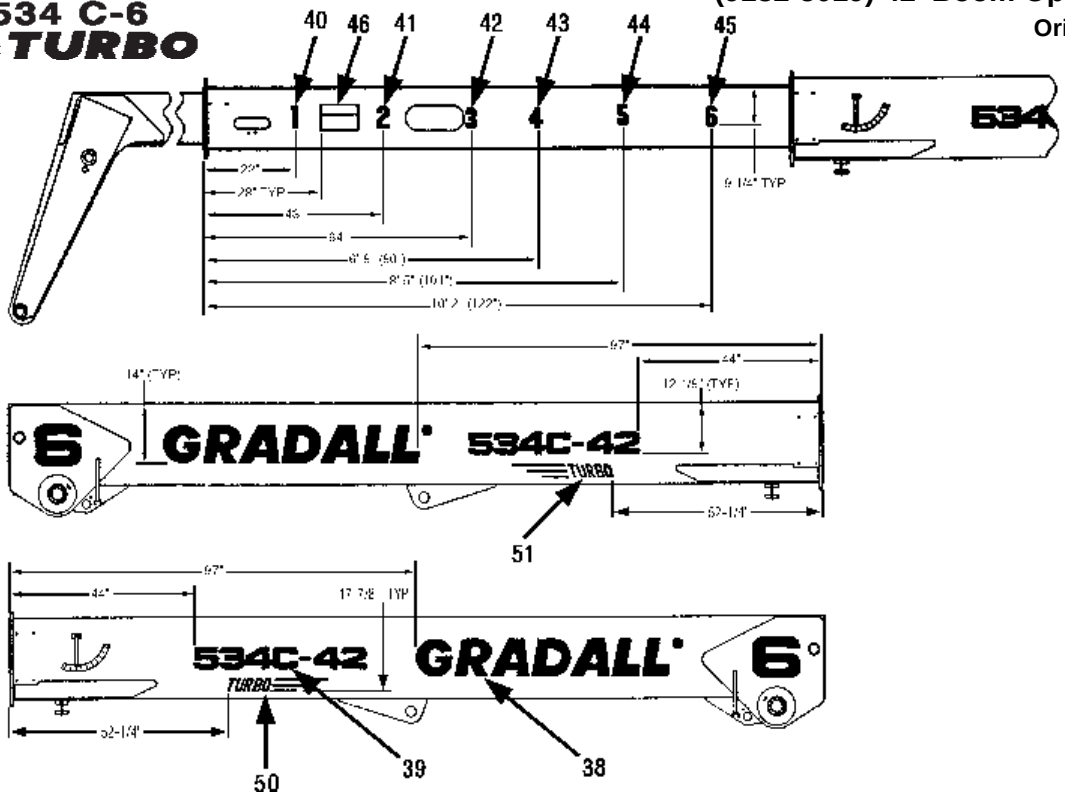

Item	Part No.	Qty.	Description Of Part
	9132-5019	1	42' BOOM OPTION (includes all items)
1		Ref	42' BOOM ASSY (see page 13-33)
2		Ref	LIFT CYLINDER (see page 13-34)
3		Ref	COMPENSATING CYLINDER (see page 13-36)
4	9112-1273	1	LIFT CYLINDER PIN
5	9112-1274	1	COMPENSATING CYLINDER PIN
6	9132-6017	1	FRAME WELDMENT
7	9116-6013	1	REAR AXLE WELDMENT
8		Ref	STABILIZER CYLINDER (see page 13-35)
9	8866-2065	3	ELBOW, 90 DEGREES (includes o-ring)
	8859-1205	3	O-RING
10	8866-2085	1	ELBOW, 45 DEGREES (includes o-ring)
	8859-1205	1	O-RING
11	9116-1269	2	KEEPER
12	8856-1111	6	WASHER, 1/2
13	8820-1065	2	HEX HD CAPSCREW, 1/2-13X1, GR5
14	9116-6062	2	PIN WELD
15	8820-1066	4	HEX HD CAPSCREW, 1/2-13X1-1/4, GR5
16	8855-1013	4	LOCKWASHER, 1/2
17	8866-2019	1	CONNECTOR (includes o-ring)
	8859-1206	1	O-RING
18	8471-8287	1	HOSE ASSY
19	8471-8989	1	HOSE ASSY
20	7713-3145	1	HOSE ASSY
21	8866-2244	1	SWIVEL NUT RUN TEE, 1" TUBE
22	9103-3230	1	TUBE END REDUCER
23	8820-1047	2	HEX HD CAPSCREW, 3/8-16X4, GR5
24	8855-1011	2	LOCKWASHER, 3/8
25	8850-1006	2	HEX NUT, 3/8-16
26		Ref	STABILIZER VALVE (see page 13-37)

Item	Part No.	Qty.	Description Of Part
27	8662-1230	2	SUPPORT CLAMP
28	7714-3006	2	WHIZ-LOCK NUT, 5/16
29		Ref	STABILIZER SENSOR ASSY (see page 13-38)
30	9114-1260	1	BRACKET
31	8830-1093	2	ROUND HD MACHINE SCREW, #10-24X3/4
32	8855-1007	2	LOCKWASHER, #10
33	8856-1001	4	WASHER, 3/16
34	9104-3199	2	SQUARE NUT, #10-24
35	9002-7187	8	TIE WRAP
36	9002-1705	1	SUPPORT CLAMP
37	9116-3049	1	STABILIZER HARNESS
38	9112-3037	2	GRADALL DECAL (std)
	9112-3038	2	GRADALL DECAL (opt)
39	9112-3169	2	534C-42 DECAL (std)
	9112-3173	2	534C-42 DECAL (opt)
40	9100-3016	1	"1" DECAL (std)
	9104-3134	1	"1" DECAL (opt)
41	9100-3018	1	"2" DECAL (std)
	9104-3135	1	"2" DECAL (opt)
42	9112-3042	1	"3" DECAL (std)
	9112-3043	1	"3" DECAL (opt)
43	9100-3020	1	"4" DECAL (std)
	9104-3136	1	"4" DECAL (opt)
44	9112-3044	1	"5" DECAL (std)
	9112-3045	1	"5" DECAL (opt)
45	9116-3077	1	"6" DECAL (std)
	9116-3078	1	"6" DECAL (opt)
46	7702-3009	2	HOLE WARNING DECAL
47	9112-1290	1	LIFT CYLINDER PIN
48	9112-3170	1	534C6-42 CAPACITY CHART
49	9112-3171	1	534C6-42 S/N & ATTACH. PLATE
50	9132-3002	1	L.H. TURBO DECAL (std)
	9132-3004	1	L.H. TURBO DECAL (opt)
51	9132-3003	1	R.H. TURBO DECAL (std)
	9132-3005	1	R.H. TURBO DECAL (opt)

OPTIONAL EQUIPMENT
(9112-5058) 42' Boom Assembly
Original Issue 5-97
Revised 6-28-99

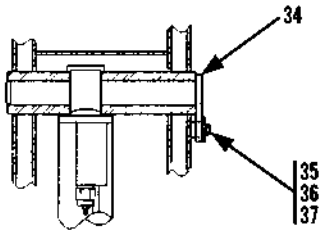

SECTION C - C

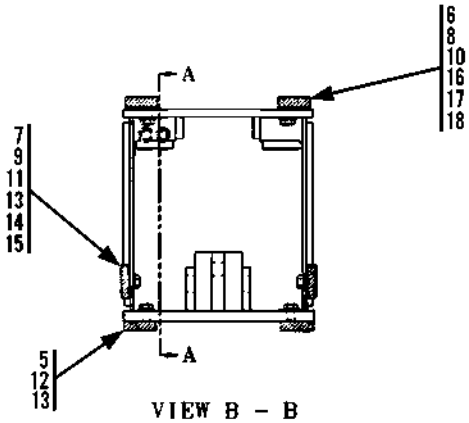

VIEW B - B

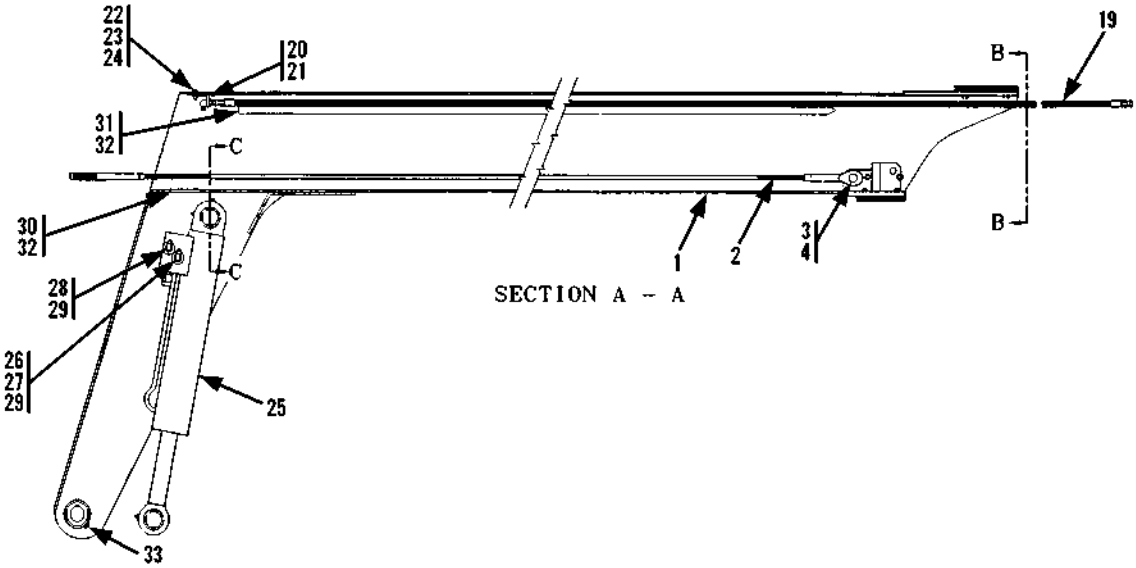

SECTION A - A

Item	Part No.	Qty.	Description Of Part
	9112-5058	1	42' BOOM ASSY (includes all items on all four pages)
1	9112-6057	1	THIRD BOOM SECTION
2	9112-3146	2	EXTEND CABLE
3	9112-1080	1	CABLE PIN
4	8858-1310	2	RETAINER RING
5	9112-3019	2	BEARING PAD
6	9108-3297	2	BEARING PAD
7	9103-3186	2	BEARING PAD
8	9108-1447	2	SPACER
9	9103-1236	2	SPACER
10	9112-1081	2	SHIM
11	9020-5870	4	SHIM
12	8820-1535	4	HEX HD CAPSCREW, 3/8-24X1-1/4, GR5 (torque to 32-37 ft.lbs.)
13	8856-1109	8	FLAT WASHER, 3/8
14	8820-1532	4	HEX HD CAPSCREW, 3/8-24X3/4, GR5 (torque to 32-37 ft.lbs.)
15	8820-1534	AR	HEX HD CAPSCREW, 3/8-24X1, GR5 (torque to 32-37 ft.lbs.)
16	8820-1565	4	HEX HD CAPSCREW, 1/2-20X1-1/4, GR5 (torque to 68-78 ft.lbs.)
17	9002-7471	4	HARDENED WASHER, 1/2

Item	Part No.	Qty.	Description Of Part
18	8820-1566	AR	HEX HD CAPSCREW, 1/2-20X1-1/2, GR5 (torque to 68-78 ft.lbs.)
19	8471-8954	2	HOSE ASSY
20	9112-1125	1	BULKHEAD BRACKET
21	9002-7179	2	BULKHEAD FITTING
22	8820-1020	2	HEX HD CAPSCREW, 5/16-18X1, GR5
23	8855-1010	2	LOCKWASHER, 5/16
24	8850-1005	2	HEX NUT, 5/16
25	9108-3513	1	TILT CYLINDER
26	9105-3426	1	STR. THD. CONNECTOR
27	8866-2105	1	ELBOW, 90 DEGREES (swivel nut)
28	9105-3450	1	ELBOW, 90 DEGREES (includes item 29)
29	8859-1207	2	O-RING
30	9020-6199	13"	TRIM LOCK
31	9020-6194	3.5"	TRIM LOCK
32	1440-2248	AR	3M ADHESIVE
33	8867-1001	2	GREASE FITTING
34	9114-6052	1	PIN WELDMENT
35	8820-1065	1	HEX HD CAPSCREW, 1/2-13X1, GR5
36	8362-1283	1	SPECIAL WASHER
37	8855-1013	1	LOCKWASHER, 1/2

** Added crowd cylinder for service, changed part number on hose guard.*

OPTIONAL EQUIPMENT
(9112-5058) 42' Boom Assembly
Original Issue 5-97
Revised 6-28-99

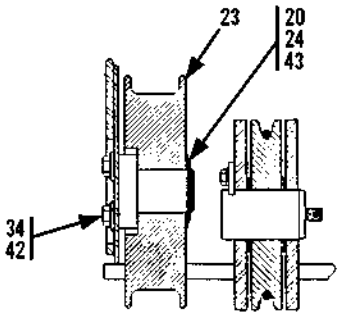

SECTION G -G

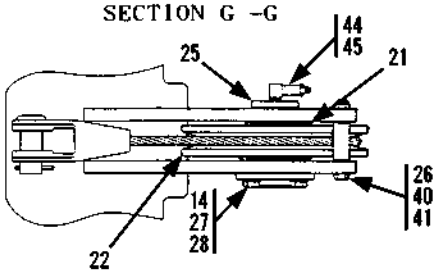

VIEW H - H

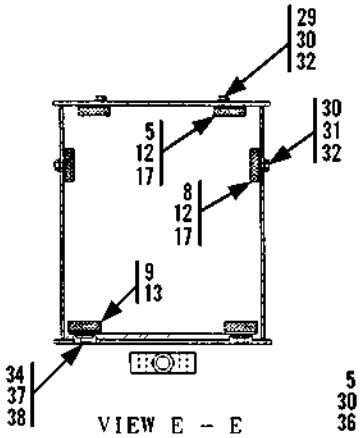

VIEW E - E

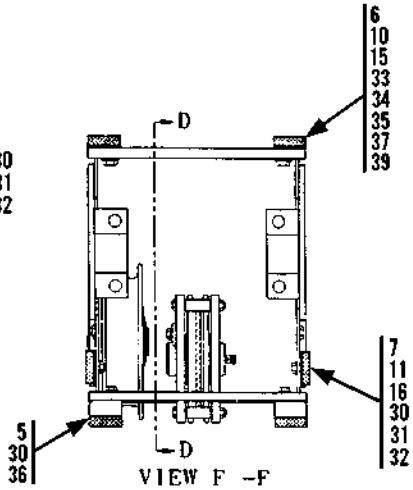

VIEW F -F

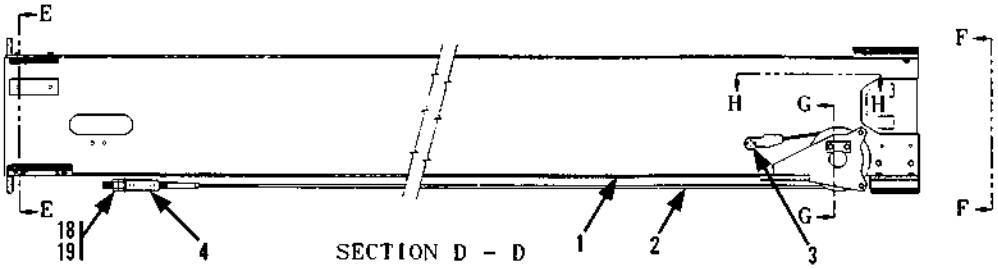

SECTION D - D

Item	Part No.	Qty.	Description Of Part
	9112-5058	1	42' BOOM ASSY (includes all items on all four pages)
1	9112-6056	1	SECOND BOOM SECTION
2	9112-3147	1	RETRACTION CABLE
3	8863-1337	1	COTTER PIN, 3/16X1-1/2
4	9108-1087	1	CABLE ADJUSTMENT BLOCK
5	9112-3019	4	BEARING PAD
6	9108-3297	2	BEARING PAD
7	9103-3186	2	BEARING PAD
8	9112-3021	2	BEARING PAD
9	9108-3063	2	BEARING PAD
10	9108-1447	2	SPACER (.132" thick)
11	9103-1236	2	SPACER (.06" thick)
12	9112-1083	4	SPACER (.06" thick)
13	9108-1172	2	SPACER (.132" thick)
14	8664-1158	1	PIN KEEPER
15	9112-1081	4	SHIM (.06" thick)
16	9020-5870	4	SHIM (.06" thick)
17	9112-1082	8	SHIM (.06" thick)
18	9002-7473	1	HARDENED WASHER, 3/4
19	8850-1012	2	HEX NUT, 3/4-10
20	9020-3040	1	THRUST WASHER
21	9104-1451	2	THRUST WASHER
22	9112-5031	1	RETRACTION SHEAVE ASSY
23	9112-3016	1	HOSE SHEAVE
24	9108-1326	1	HOSE REEL SUPPORT
25	9112-1197	1	SHEAVE PIN
26	9112-1056	2	RETAINER ROLLER
27	8820-1034	2	HEX HD CAPSCREW, 3/8-16X7/8, GR5

Item	Part No.	Qty.	Description Of Part
28	8855-1011	2	LOCKWASHER, 3/8
29	8820-1535	AR	HEX HD CAPSCREW, 3/8-24X1-1/4, GR5 (torque to 32-37 ft.lbs.)
30	8856-1109	16	FLAT WASHER, 3/8
31	8820-1532	8	HEX HD CAPSCREW, 3/8-24X3/4, GR5 (torque to 32-37 ft.lbs.)
32	8820-1534	4	HEX HD CAPSCREW, 3/8-24X1, GR5 (torque to 32-37 ft.lbs.)
33	8820-1565	2	HEX HD CAPSCREW, 1/2-20X1-1/4, GR5 (torque 68-78 ft.lbs.)
34	9002-7471	9	HARDENED WASHER, 1/2
35	8820-1566	AR	HEX HD CAPSCREW, 1/2-20X1-1/2, GR5 (torque 68-78 ft.lbs.)
36	8820-1538	4	HEX HD CAPSCREW, 3/8-24X2, GR5 (torque to 32-37 ft.lbs.)
37	8820-1562	6	HEX HD CAPSCREW, 1/2-20X3/4, GR5 (torque to 68-78 ft.lbs.)
38	8820-1564	AR	HEX HD CAPSCREW, 1/2-20X1, GR5 (torque to 68-78 ft.lbs.)
39	8820-1563	AR	HEX HD CAPSCREW, 1/2-20X7/8, GR5 (torque to 68-78 ft.lbs.)
40	8820-1043	2	HEX HD CAPSCREW, 3/8-16X3, GR5 (torque to 32-37 ft.lbs.)
41	8852-1306	2	THIN LOCKNUT, 3/8-16
42	8320-1123	3	HEX HD CAPSCREW, 1/2-13X1, GR5 (torque to 68-78 ft.lbs.)
43	8858-1320	1	EXTERNAL RETAINING RING
44	9103-3445	1	GREASE FITTING
45	8871-2011	1	ELBOW, 90 DEGREES

** Added crowd cylinder for service, changed part number on hose guard.*

OPTIONAL EQUIPMENT
(9112-5058) 42' Boom Assembly
Original Issue 5-97
Revised 6-28-99

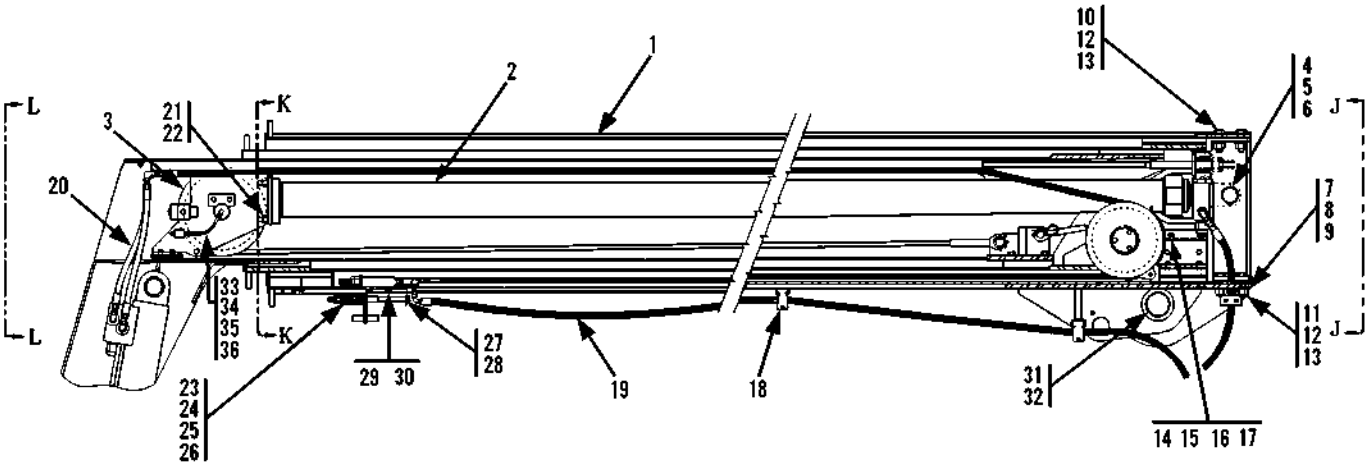

Item	Part No.	Qty.	Description Of Part
	9112-5058	1	42' BOOM ASSY (includes all items on all pages)
1	9112-6055	1	FIRST BOOM SECTION
2	9112-5059	1	CROWD CYLINDER
*	9133-5018	1	CROWD CYLINDER (for service only)
3	9112-5061	1	CABLE BRACKET ASSY
4	9112-6010	1	CYLINDER BRACKET
5	9112-1041	1	CROWD CYLINDER PIN
6	8858-1320	2	EXTERNAL RETAINING RING
7	9112-1023	2	SHIM (.0598 thick)
8	9112-1024	2	SHIM (.0359 thick)
9	9112-1157	2	SHIM (.1340 thick)
10	8320-1038	4	HEX HD CAPSCREW, 3/4-10X2-1/4, GR8 (torque 340-365 ft.lbs.)
11	8320-1039	4	HEX HD CAPSCREW, 3/4-10X2-1/2, GR8 (torque 340-365 ft.lbs.)
12	9002-7473	8	HARDENED WASHER, 3/4
13	8850-1012	8	HEX NUT, 3/4-10
*14	9112-6071	1	HOSE GUARD
15	8820-1034	2	HEX HD CAPSCREW, 3/8-16X7/8, GR5
16	8855-1011	2	LOCKWASHER, 3/8

Item	Part No.	Qty.	Description Of Part
17	8856-1109	2	FLAT WASHER, 3/8
18	9020-7463	8	CUSHION CLAMP
19	8471-8953	2	HOSE ASSY
20	8471-7896	2	HOSE ASSY
21	8852-1208	4	HEX LOCKNUT, 1/2-13
22	8856-1111	4	FLAT WASHER, 1/2
23	9112-3054	2	COMPRESSION SPRING
24	9112-1134	2	SPRING RETAINER
25	8850-1008	2	HEX NUT, 1/2-13
26	8850-1108	2	HEX JAM NUT, 1/2-13
27	9112-6008	2	HOSE TAKE-UP WELDMENT
28	9002-7179	2	BULKHEAD FITTING, 90 DEGREE
29	8320-1026	4	HEX HD CAPSCREW, 1/2-13X1-1/2, (torque 68-78 ft.lbs.)
30	9002-7471	4	HARDENED WASHER, 1/2
31	9108-3298	2	BUSHING
32	8867-1001	2	LUBE FITTING
33	8668-3088	2	TUBE FITTING, 90 DEGREES
34	8540-3040	2	STRAIGHT TUBE FITTING
35		20"	COPPER TUBING, 1/4" O.D.
36	8867-1002	2	LUBE FITTING, STRAIGHT, 1/8

** Added crowd cylinder for service, changed part number on hose guard.*

OPTIONAL EQUIPMENT
(9112-5058) 42' Boom Assembly
Original Issue 5-97
Revised 6-28-99

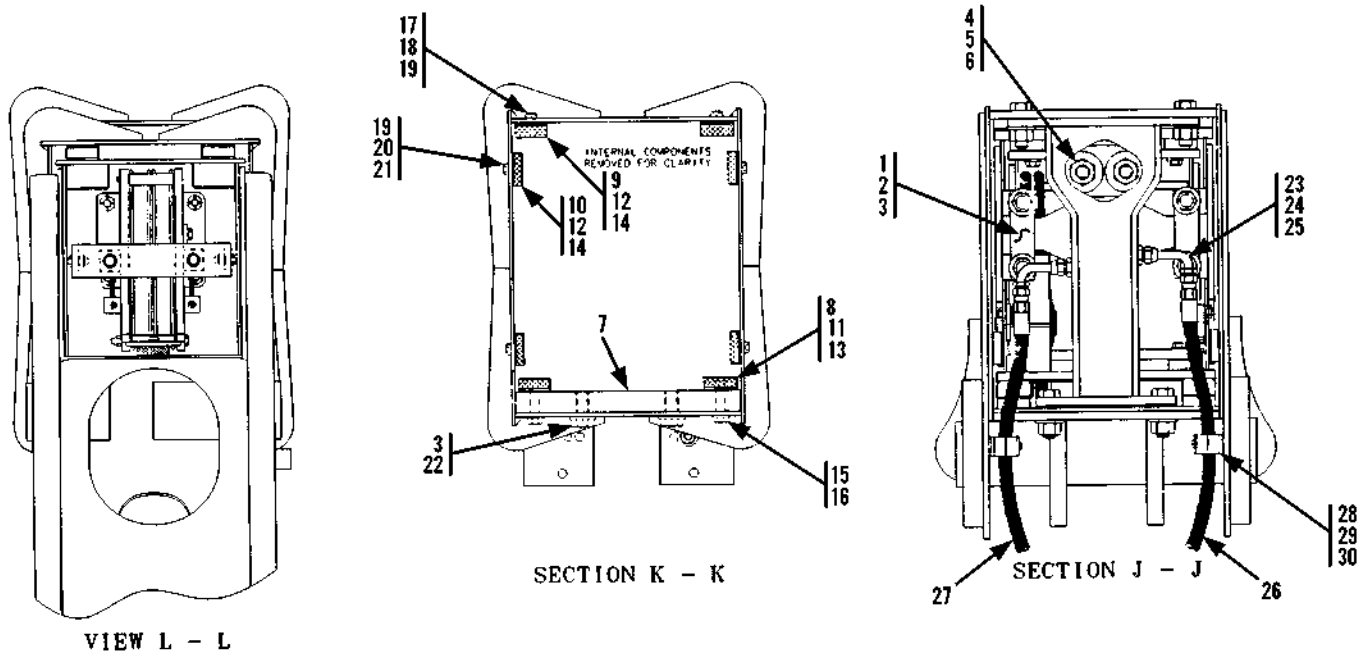

Item	Part No.	Qty.	Description Of Part
	9112-5058	1	42' BOOM ASSY (includes all items on all pages)
1	9112-1066	2	CROWD CYLINDER RETAINER
2	8320-1017	4	HEX HD CAPSCREW, 3/4-10X2-3/4, GR5 (torque 340-365 ft.lbs.)
3	9002-7473	6	HARDENED WASHER, 3/4
4	9112-3018	2	SPRING
5	9112-1079	2	SPECIAL WASHER, 7/8
6	8850-1314	4	HEX NUT, 7/8-14
7	9112-1022	1	BEARING PLATE
8	9108-3063	2	BEARING PAD
9	9103-3185	2	BEARING PAD
10	9103-3186	4	BEARING PAD
11	9108-1172	2	SPACER (.132 thick)
12	9103-1236	6	SPACER (.060 thick)
13	9108-1171	2	SHIM (.060 thick)
14	9020-5870	12	SHIM (.060 thick)
15	8820-1568	4	HEX HD CAPSCREW, 1/2-20X2, GR5, (torque 68-78 ft.lbs.)

Item	Part No.	Qty.	Description Of Part
16	9002-7471	4	HARDENED WASHER, 1/2
17	8820-1535	4	HEX HD CAPSCREW, 3/8-24X1-1/4, GR5 (torque 32-37 ft.lbs.)
18	8820-1536	AR	HEX HD CAPSCREW, 3/8-24X1-1/2. GR5 (torque 32-37 ft.lbs.)
19	8856-1109	12	FLAT WASHER, 3/8
20	8820-1532	8	HEX HD CAPSCREW, 3/8-24X3/4, GR5 (torque to 32-37 ft.lbs.)
21	8820-1534	AR	HEX HD CAPSCREW, 3/8-24X1, GR5 (torque to 32-37ft.lbs.)
22	8820-1608	2	HEX HD CAPSCREW, 3/4-16X1-1/2, GR5 (torque to 265-290 ft.lbs.)
23	8656-1308	2	CONNECTOR (includes item 25)
24	9112-3022	2	LONG ELBOW, 90 DEGREE
25	8859-1205	2	O-RING
26	8471-7863	1	HOSE ASSY
27	8471-7862	1	HOSE ASSY
28	7713-3893	2	CLAMP SET
29	7713-3052	2	COVER PLATE
30	7713-3209	4	HEX HD CAPSCREW,1/4-20X1-3/8

** Added crowd cylinder for service, changed part number on hose guard.*

OPTIONAL EQUIPMENT
(9112-3141) Lift Cylinder
42' Boom Only

Starting Serial No. 0188002 thru 0488365

Original Issue 5-97

Revised 2-10-98

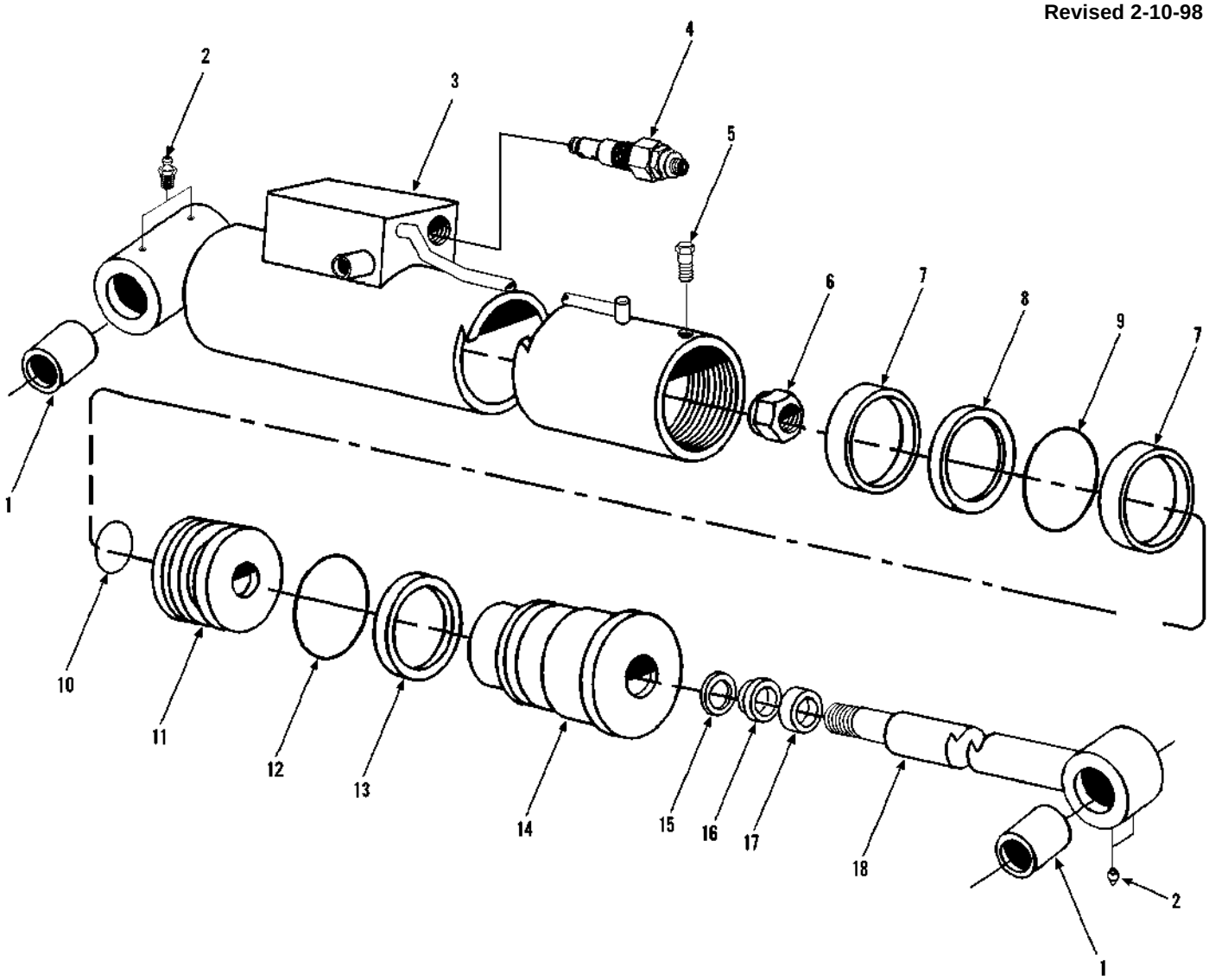

Item	Part No.	Qty.	Description Of Part
	9112-3141	1	LIFT CYLINDER ASSY (includes all items)
	9112-4105	1	SEAL KIT (includes items 7 thru 10, 12, 13 & 15 thru 17)
1	9112-4106	4	BUSHING
2	9114-4128	4	GREASE FITTING
3		1	CASE ASSY
4	9112-3089	1	COUNTERBALANCE VALVE
	9103-4276	1	COUNTERBALANCE VALVE SEAL KIT
5	9112-4096	1	CAPSCREW, #8X32X.375
6		1	LOCKNUT (lubricate & torque to 2400 ft.lbs.)
7		2	WEAR RING
8		1	PISTON SEAL

Item	Part No.	Qty.	Description Of Part
9		1	O-RING
10		1	O-RING
11		1	PISTON
12		1	O-RING
13		1	BACK-UP RING
14		1	CYLINDER HEAD
15		1	STEP SEAL
16		1	U-CUP
17		1	WIPER
18		1	ROD ASSY
			NOTE: ONLY ITEMS WITH PART NUMBERS ARE AVAILABLE FOR SERVICE.

**Revised serial number due to the addition of a new design.*

OPTIONAL EQUIPMENT
(9112-3183) Lift Cylinder
42' Boom Only

Starting Serial No. 0488366

Original Issue 2-98

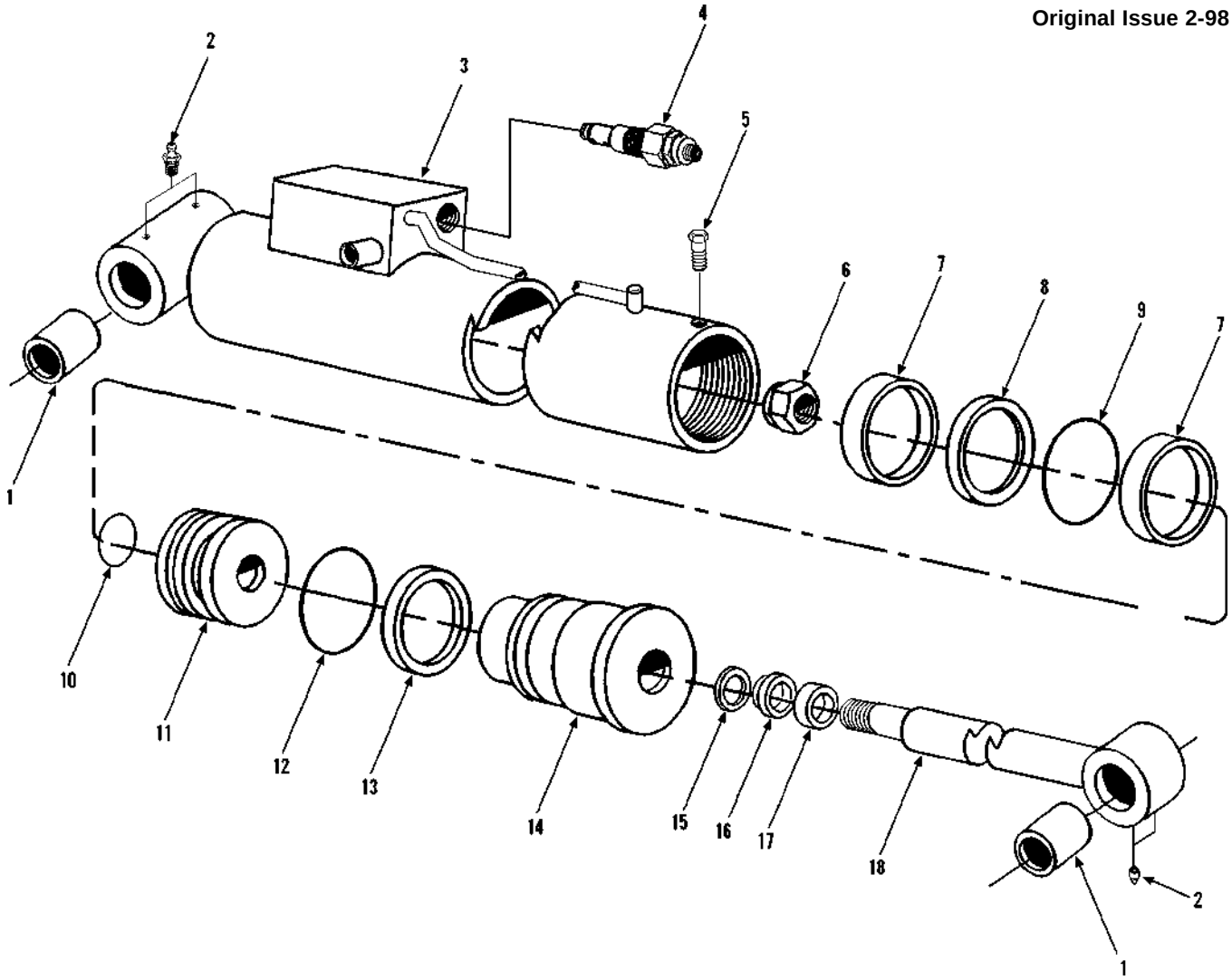

Item	Part No.	Qty.	Description Of Part
	9112-3183	1	LIFT CYLINDER ASSY (includes all items)
	9112-4105	1	SEAL KIT (includes items 7 thru 10, 12, 13 & 15 thru 17)
1	9112-4106	4	BUSHING
2	9114-4128	4	GREASE FITTING
3		1	CASE ASSY
4	9112-3089	1	COUNTERBALANCE VALVE
	9103-4276	1	COUNTERBALANCE VALVE SEAL KIT
5	9112-4096	1	CAPSCREW, #8X32X.375
6		1	LOCKNUT (lubricate & torque to 2400 ft.lbs.)
7		2	WEAR RING
8		1	PISTON SEAL

Item	Part No.	Qty.	Description Of Part
9		1	O-RING
10		1	O-RING
11		1	PISTON
12		1	O-RING
13		1	BACK-UP RING
14		1	CYLINDER HEAD
15		1	STEP SEAL
16		1	U-CUP
17		1	WIPER
18		1	ROD ASSY
			NOTE: ONLY ITEMS WITH PART NUMBERS ARE AVAILABLE FOR SERVICE.

OPTIONAL EQUIPMENT
(9116-3045) Stabilizer Cylinder

Original Issue 5-97
Revised 10-9-97

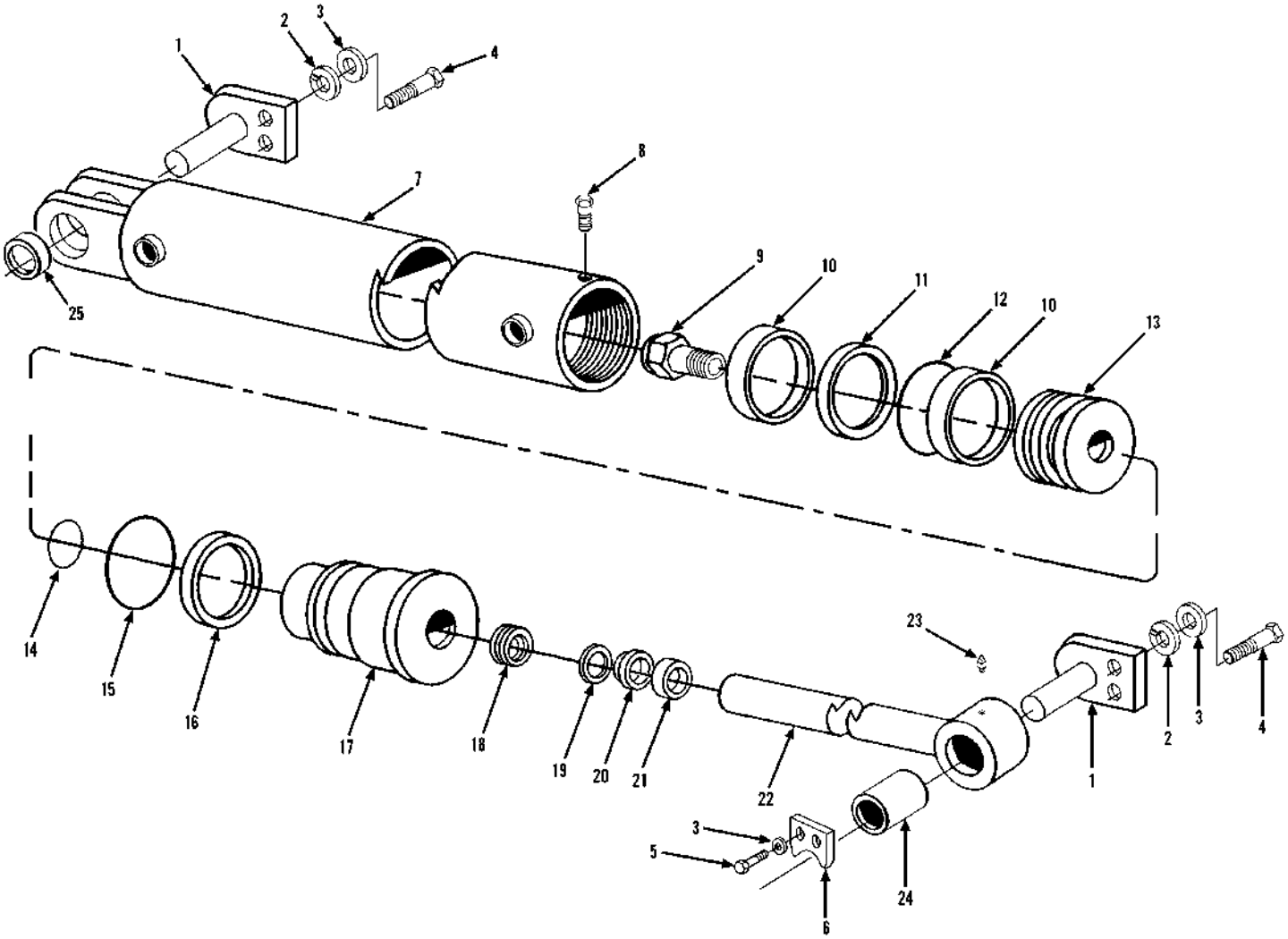

Item	Part No.	Qty.	Description Of Part
	9116-3045	1	STABILIZER CYLINDER (includes all items except 1 thru 6)
	9114-4005	Ref	SEAL KIT (includes items 10, 11, 12, 14, 15, 16, 18, 19 & 20)
1	9116-6062	2	CYLINDER PIN
2	8855-1013	4	LOCKWASHER, 1/2"
3	8856-1111	6	FLAT WASHER, 1/2"
4	8820-1066	4	HEX HD CAPSCREW,1/2-13X1-1/4, GR5
5	8820-1065	2	HEX HD CAPSCREW, 1/2-13X1, GR5
6	9116-1269	2	PIN KEEPER
7	9116-4028	1	CASE ASSY
8	9112-4096	1	CAPSCREW
9	9106-4017	1	LOCKNUT
10		2	WEAR RING
11		1	PISTON SEAL
12		1	O-RING

Item	Part No.	Qty.	Description Of Part
13	9104-4033	1	PISTON
14		1	O-RING
15		1	O-RING
16		1	BACK-UP RING
17	9114-4034	1	CYLINDER HEAD
18		1	WEAR RING
19		1	STEP SEAL
20		1	U-CUP
21	9112-4103	1	WIPER
22	9116-4029	1	SHAFT ASSY
23	9114-4128	1	GREASE FITTING
24	9116-4030	1	BUSHING
25	9116-4031	2	BUSHING
			NOTE: ONLY ITEMS WITH PART NUMBERS ARE AVAILABLE FOR SERVICE.

** Removed 42 ft. boom only designation in upper right corner.*

OPTIONAL EQUIPMENT
(9112-3143) Compensating Cylinder
42' Boom Only

Original Issue 5-97

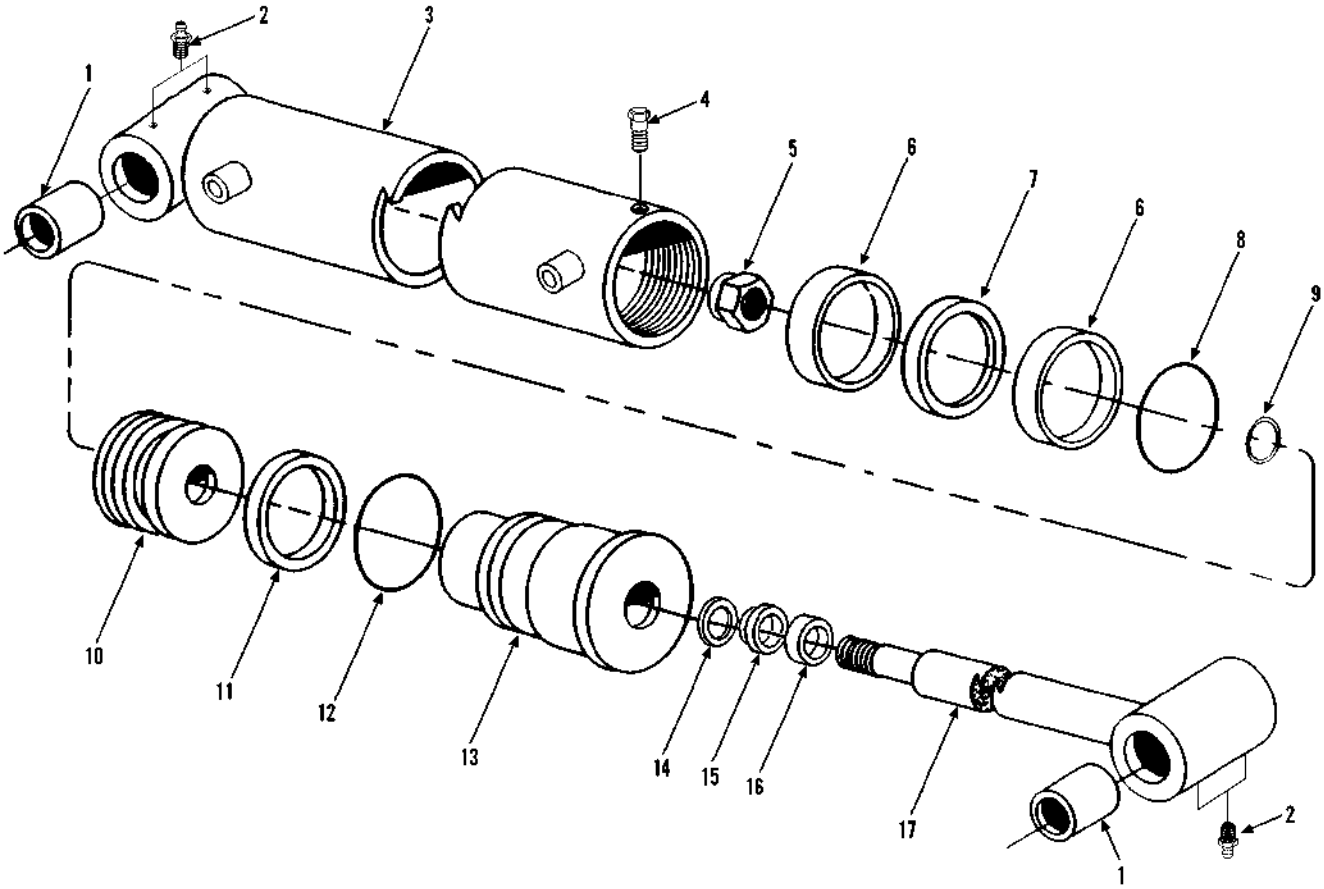

Item	Part No.	Qty.	Description Of Part
	9112-3143	1	COMPENSATING CYLINDER ASSY (includes all items)
	9103-4339	1	SEAL KIT (includes items 6 thru 9, 11, 12, & 14 thru 16)
1	9114-4080	4	BUSHING
2	9114-4128	4	GREASE FITTING
3		1	CASE ASSY
4	9112-4096	1	CAPSCREW
5	9103-4153	1	LOCKNUT (lubricate & torque to 1175-1275 ft.lbs.)
6		2	WEAR RING
7		1	PISTON SEAL
8		1	O-RING

Item	Part No.	Qty.	Description Of Part
9		1	O-RING
10	9103-4139	1	PISTON
11		1	BACK-UP RING
12		1	O-RING
13	9112-4081	1	CYLINDER HEAD
14		1	STEP SEAL
15		1	U-CUP
16		1	WIPER
17	9112-4082	1	ROD ASSY
			NOTE: ONLY ITEMS WITH PART NUMBERS ARE AVAILABLE FOR SERVICE.

OPTIONAL EQUIPMENT
(9116-3164) Stabilizer Valve Assy
42' Boom Only
Original Issue 5-97

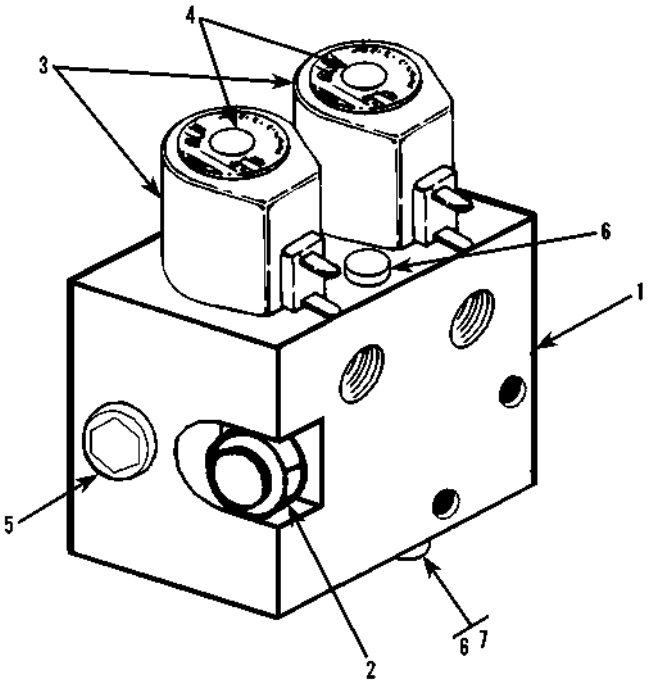

Item	Part No.	Qty.	Description Of Part
	9116-3164	1	STABILIZER VALVE (includes items 1 thru 7)
1		1	VALVE BODY (not sold separately, order P/N 9116-3164)
2	9116-4053	1	CHECK VALVE
	9116-4054	1	CHECK VALVE SEAL KIT
3	9116-4055	2	SOLENOID VALVE ASSY (includes item 4)
	9116-4056	2	SOLENOID VALVE SEAL KIT
4	9114-4158	2	COIL
5	9116-4057	1	PORT PLUG
	9116-4058	1	PORT PLUG SEAL
6	9116-4059	2	PORT PLUG
	9116-4060	2	PORT PLUG SEAL
7	9116-4063	1	ORIFICE PLUG
			NOTE: ONLY ITEMS WITH PART NUMBERS ARE AVAILABLE FOR SERVICE.

OPTIONAL EQUIPMENT
(9116-5006) Stabilizer Proximity Sensor Assembly
42' Boom Only

Original Issue 5-97

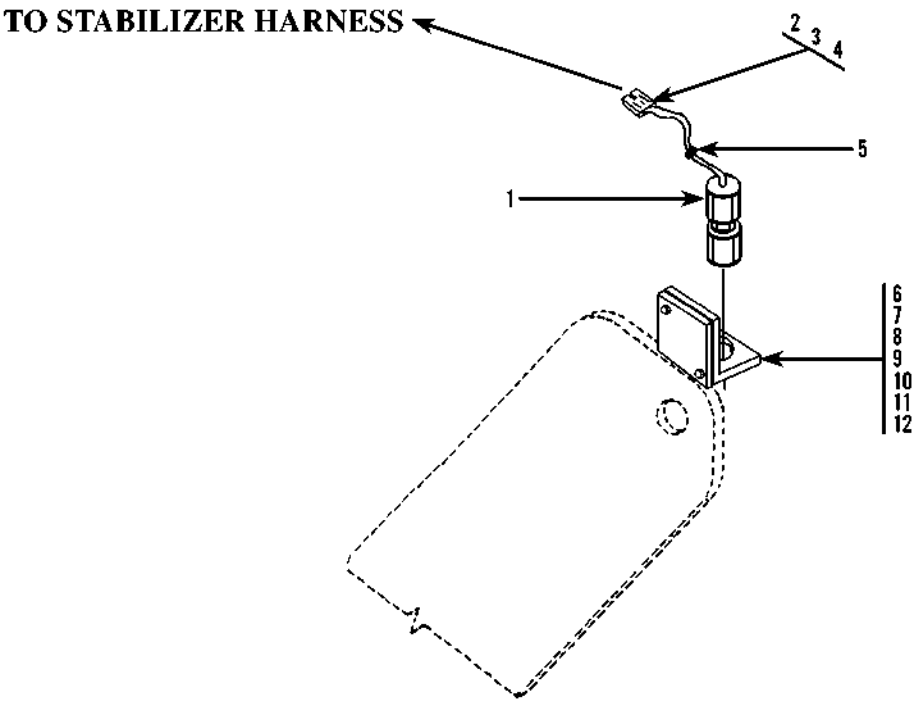

Item	Part No.	Qty.	Description Of Part
	9116-5006	1	STABILIZER PROXIMITY SENSOR ASSY (includes items 1 thru 5)
1	9114-3155	1	PROXIMITY SENSOR SWITCH
2	8096-3062	1	WEATHERPROOF SHROUD (4-wire)
3	8096-3069	4	MALE PIN TERMINAL
4	8096-3066	4	CABLE SEALS
5	9105-3419	1	TIE WRAP
6	9116-1185	1	STABILIZER SENSOR BRACKET
7	8830-1093	2	RD HD MACHINE SCREW, 10-24X3/4
8	8855-1007	2	LOCKWASHER, #10
9	8856-1001	4	FLAT WASHER, 3/16
10	9104-3199	2	SQUARE NUT, #10-24
11	9002-7187	4	TIE WRAP
12	9002-1705	1	SUPPORT CLAMP

OPTIONAL EQUIPMENT
(9112-5082) Auxiliary Hydraulics Assembly
42' Boom Only

Original Issue 5-97
Revised 2-9-98

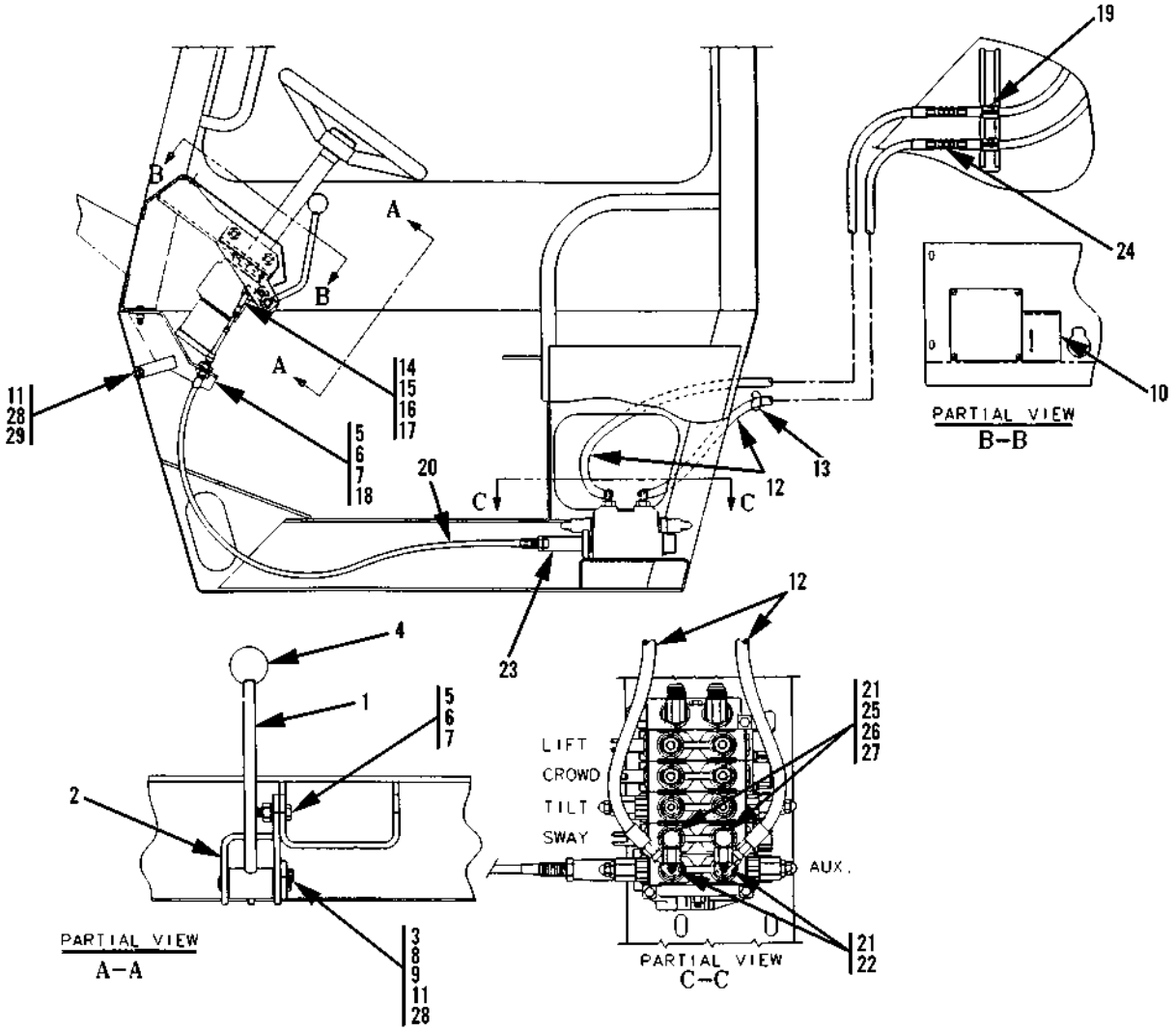

Item	Part No.	Qty.	Description Of Part
	9112-5082	1	AUXILIARY HYDRAULICS ASSY, 42' BOOM OPTION (includes all items on both pages)
1	9112-6026	1	HANDLE WELDMENT
2	9112-6025	1	LEVER BRACKET
3	9112-6027	1	PIN WELDMENT
4	9020-0299	1	KNOB
5	8820-1036	4	HEX HD CAPSCREW, 3/8-16X1-1/4, GR5
6	8850-1006	4	HEX NUT, 3/8
7	8855-1011	4	LOCKWASHER, 3/8
8	9108-3136	2	BUSHING
9	9002-8662	2	WAVE BEND WASHER
10	9103-3417	1	AUXILIARY CONTROL DECAL
11	8820-1018	2	HEX HD CAPSCREW, 5/16-18X3/4, GR5
12	8471-8040	2	HOSE ASSY
13	9002-7187	10	TY WRAP

Item	Part No.	Qty.	Description Of Part
14	8882-1002	1	YOKE END
15	8863-3001	1	CLEVIS PIN
16	8863-1302	1	COTTER PIN, 1/16X3/4
17	8850-1404	1	HEX JAM NUT, 1/4-28
18	9112-6023	1	CABLE BRACKET WELDMENT
19	9020-7464	2	CUSHION CLAMP, 3/4
20	9112-3050	1	PUSH-PULL CABLE
21	8859-1206	4	O-RING
22	9108-3310	2	ELBOW, 90 DEGREES (includes item 21)
23	9112-3062	1	CABLE ADAPTER BONNET
24	8866-1065	2	UNION, 1/2 TUBE
25	9108-3343	2	LONG ELBOW, 90 DEGREES (includes item 21)
26	8866-1348	2	TUBE END REDUCER, 5/8-1/4
27	8866-1407	2	NUT
28	8855-1010	2	LOCKWASHER, 5/16
29	8850-1005	1	HEX NUT, 5/16-18

*Changed part number on second page of 13-39

OPTIONAL EQUIPMENT
(9112-5082) Auxiliary Hydraulics Assembly
42' Boom Only

Original Issue 5-97
Revised 2-9-98

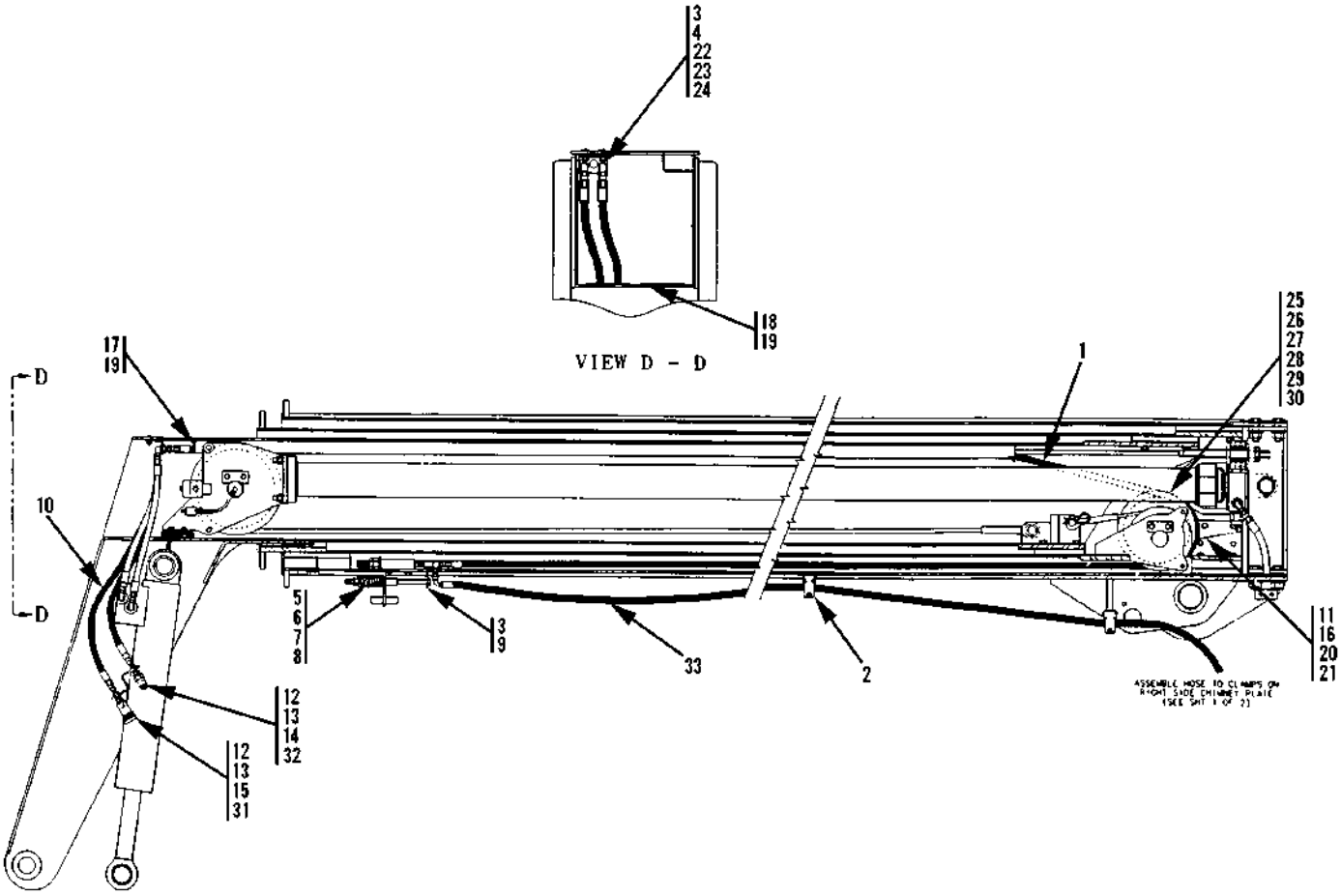

Item	Part No.	Qty.	Description Of Part
	9112-5082	1	AUXILIARY HYDRAULICS ASSY, 42' BOOM OPTION (includes all items on both pages)
1	8471-8954	2	HOSE ASSY
2	9020-7463	8	CUSHION CLAMP
3	9002-7179	4	90 DEGREE BULKHEAD FITTING
4	8855-1010	2	LOCKWASHER, 5/16
5	9112-3054	2	COMPRESSION SPRING
6	9112-1134	2	SPRING RETAINER
7	8850-1008	2	HEX NUT, 1/2-13
8	8850-1108	2	HEX JAM NUT, 1/2-13
9	9112-6008	2	HOSE TAKE-UP WELDMENT
10	8471-8041	2	HOSE ASSY
*11	9112-6080	1	HOSE GUARD
12	9112-3061	2	BULKHEAD FITTING
13	8871-2305	2	PIPE BUSHING, 1/2X1/4
14	9020-4244	1	MALE HYDRAULIC COUPLER
15	9020-4245	1	FEMALE HYDRAULIC COUPLER

Item	Part No.	Qty.	Description Of Part
16	8820-1034	2	HEX HD CAPSCREW, 3/8-16X7/8, GR5
17	9020-6194	3.5"	TRIM LOCK
18	9020-6199	13"	TRIM LOCK
19	1440-2248	AR	3M ADHESIVE
20	8855-1011	2	LOCKWASHER, 3/8
21	8856-1109	2	FLAT WASHER, 3/8
22	9112-1125	1	BULKHEAD BRACKET
23	8820-1019	2	HEX HD CAPSCREW, 5/16-18X7/8, GR5
24	8850-1005	2	HEX NUT, 5/16-18
25	9112-3016	1	AUXILIARY HOSE SHEAVE
26	9108-1326	1	HOSE REEL SUPPORT
27	9020-3040	1	THRUST WASHER
28	8858-1320	1	EXTERNAL RETAINING RING
29	8320-1123	3	HEX HD CAPSCREW, 1/2-13X1
30	9002-7471	3	HARDENED FLAT WASHER
31	9104-3125	1	DUST PLUG
32	9104-3126	1	DUST CAP
33	8471-8953	2	HOSE ASSY

Changed part number on item 11

OPTIONAL EQUIPMENT
(9112-5092) Winch Installation
42' Boom Only

Starting Serial No. 0488238
Original Issue 12-97
Revised 7-27-06

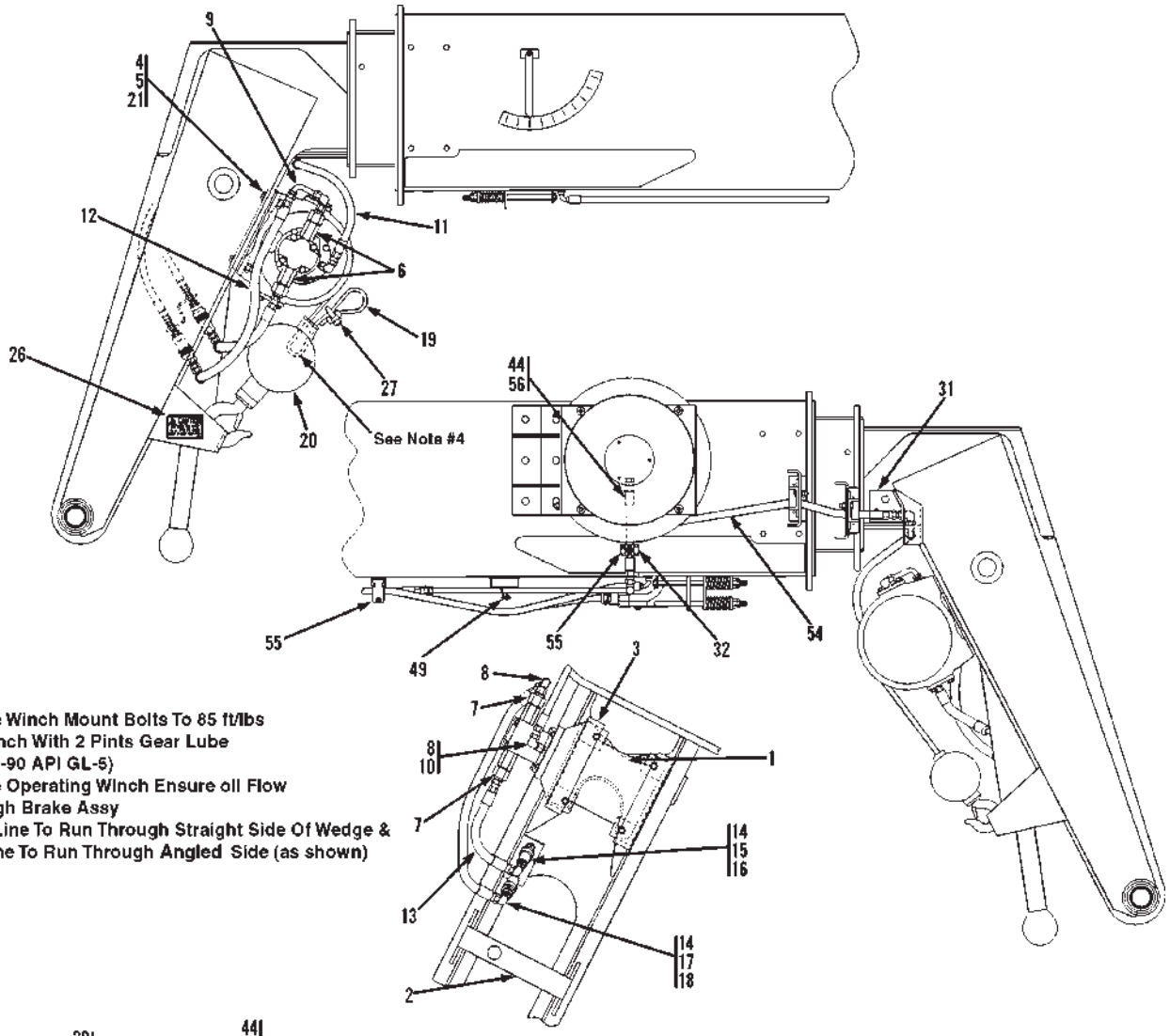

NOTE:
1. Torque Winch Mount Bolts To 85 ft/lbs
2. Fill Winch With 2 Pints Gear Lube (EP 80-90 API GL-5)
3. Before Operating Winch Ensure oil Flow Through Brake Assy
4. Load Line To Run Through Straight Side Of Wedge & Tail Line To Run Through Angled Side (as shown)

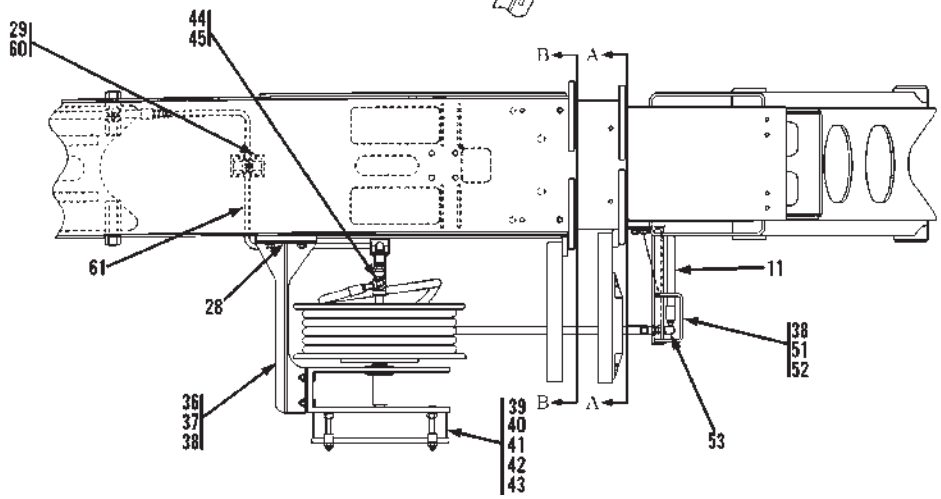

OPTIONAL EQUIPMENT
(9112-5092) Winch Installation
42' Boom Only

Starting Serial No. 0488238
Original Issue 12-97
Revised 7-27-06

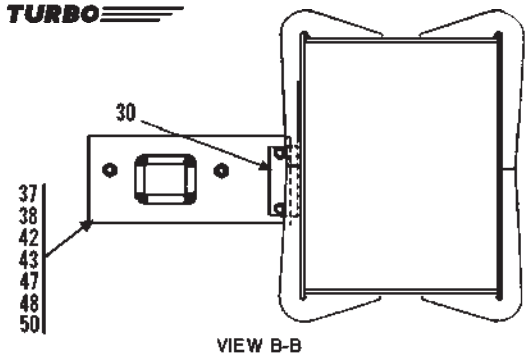

VIEW B-B

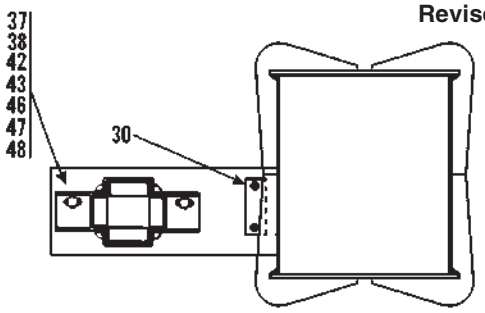

VIEW A-A

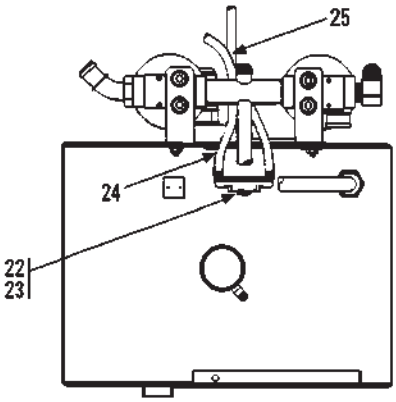

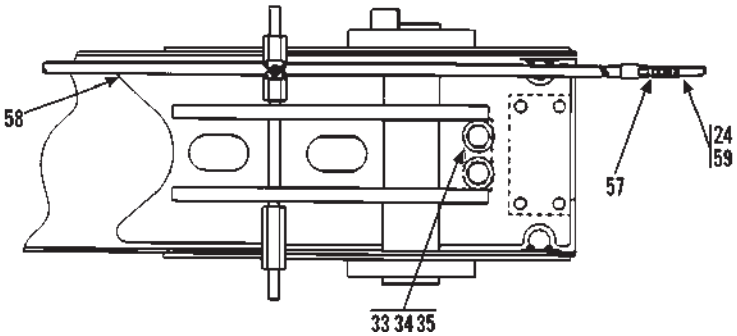

Item	Part No.	Qty.	Description Of Part
	9112-5092	1	WINCH INSTALLATION, (includes all items)
1	9112-1158	1	WINCH MOUNTING PLATE
2	9112-1159	1	STOWAGE BRACKET
3	9136-3079	1	WINCH
4	8820-1071	4	HEX HD CAPSCREW, 1/2-13X2-1/2, GR5
5	9002-7471	8	HARDENED WASHER, 1/2
6	9103-3161	2	FLOW REGULATOR
7	9103-3230	2	TUBE END REDUCER
8	8866-2106	2	ELBOW, 90 DEGREES, (swivel nut)
9	9112-3022	1	ELBOW, 90 DEGREES
10	8866-1011	1	MALE CONNECTOR, 1/4X1/2 TUBE
11	8471-8145	1	HOSE ASSY
12	8471-8548	1	HOSE ASSY
13	8471-8159	1	HOSE ASSY
14	8866-1013	2	MALE CONNECTOR, 1/2X1/2 TUBE
15	9116-3139	1	FEMALE HYDRAULIC COUPLER
16	9104-3125	1	DUST PLUG
17	9116-3138	1	MALE HYDRAULIC COUPLER
18	9104-3126	1	DUST PLUG
19	9020-7882	1	CABLE
20	9020-1443	1	HOOK & BALL
21	8850-1008	4	HEX NUT, 1/2X13
22	8866-2224	1	SWIVEL NUT BRANCH TEE, 3/8 TUBE
23	8866-2105	2	ELBOW, 90 DEGREES, (swivel nut)
24	8471-6359	1	HOSE ASSY
25	9002-7187	4	TIE WRAP
26	9108-3535	1	CAUTION DECAL
27	9002-8990	1	WIRE ROPE CLIP
28	9104-1261	1	SINGLE REEL MTG BRACKET
29	9112-1160	1	CLAMP SPACER
30	9112-1161	2	SUPPORT MOUNTING BLOCK
31	9112-1162	1	SUPPORT MOUNTING PAD
32	9102-1094	1	CHANNEL
33	9112-1163	1	RETRACTION RESTRICTOR
34	9002-7475	2	HARDENED WASHER
35	8320-1053	2	HEX HD CAPSCREW, 1-8X3, GR8, (torque to 795-845 ft. lbs.)
36	9108-6143	1	SINGLE REEL BRACKET
37	8820-1064	10	HEX HD CAPSCREW, 1/2-13X7/8, GR5
38	8855-1013	12	LOCKWASHER, 1/2
39	9104-3165	1	SINGLE HOSE REEL
40	8820-1037	4	HEX HD CAPSCREW, 3/8-16X1-1/2, GR5
41	8856-1004	4	FLATWASHER, 3/8
42	8855-1011	12	LOCKWASHER, 3/8
43	8850-1006	12	HEX NUT, 3/8-16
44	8866-1013	2	MALE CONNECTOR,1/2X1/2 TUBE
45	8866-2120	1	ELBOW, 45 DEGREES, (swivel nut)
46	9136-1036	1	ROLLER SUPPORT
47	9136-3186	2	ROLLER ASSY
48	8820-1036	8	HEX HD CAPSCREW, 3/8-16X1-1/4, GR5
49	9108-3216	1	CUSHION CLAMP
50	9136-1037	1	ROLLER SUPPORT
51	9108-6144	1	HOSE SUPPORT
52	8820-1065	2	HEX HD CAPSCREW, 1/2-13X1, GR5
53	9002-7180	1	ELBOW, 90 DEGREES, 1/2 TUBE
54	8471-9096	1	HOSE ASSY
55	9020-7463	4	CUSHION CLAMP
56	8471-8314	1	HOSE ASSY
57	8866-1064	1	UNION, 3/8 TUBE
58	8471-7453	1	HOSE ASSY
59	9108-3217	1	CUSHION CLAMP
60	9020-6089	1	ANCHOR CHANNEL
61	9112-3073	1	TUBE ASSY

** Revised illustration & parts list.*

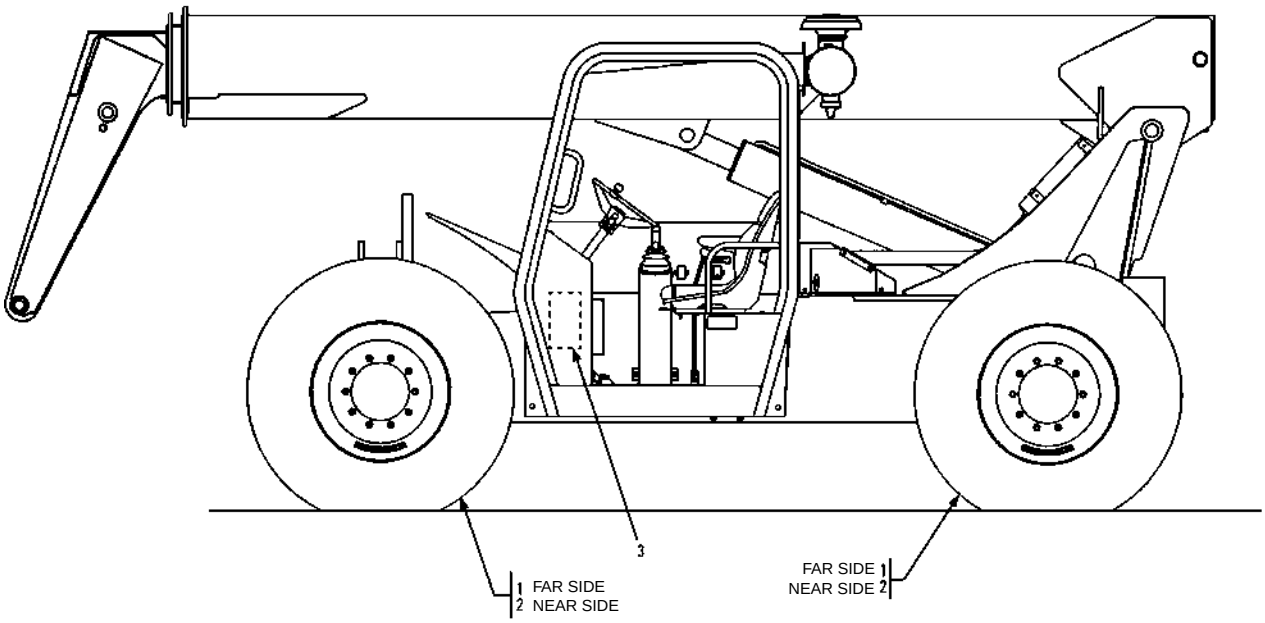

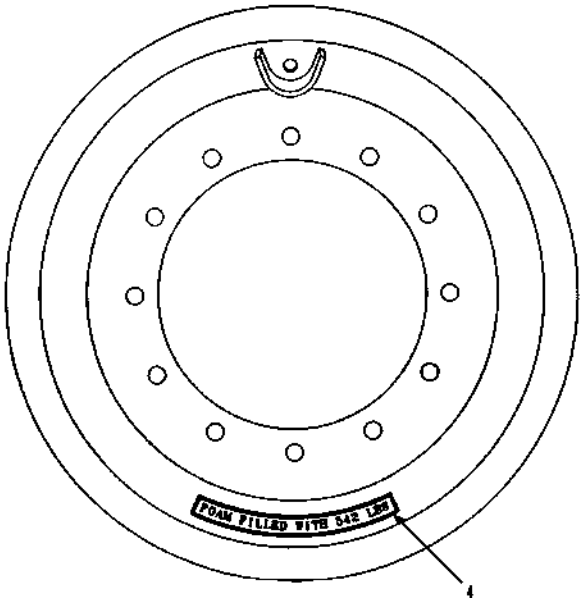

VIEW SHOWING DECAL PLACEMENT ON RIM

Item	Part No.	Qty.	Description Of Part
	9112-5105	1	FOAM TIRE OPTION
1	9103-5247	2	FOAM FILLED TIRE ASSEMBLY
2	9103-5248	2	FOAM FILLED TIRE ASSEMBLY
3	9112-3178	1	S/N & ATTACHMENT PLATE
4	9112-3160	4	TIRE DECAL

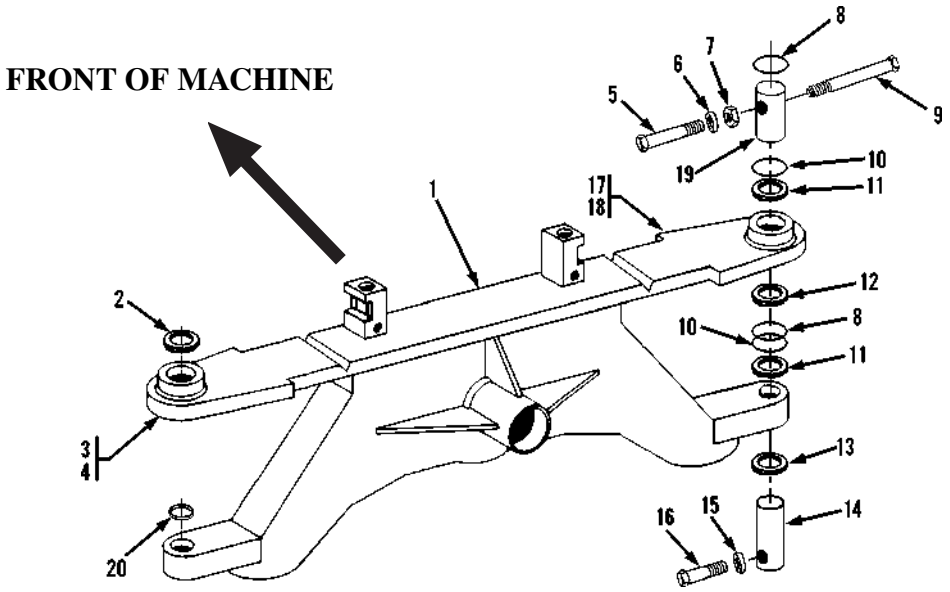

Item	Part No.	Qty.	Description Of Part
	9114-5136	1	REAR AXLE REWORK KIT (includes all items)
1		1	REAR AXLE WELDMENT
2	9112-3028	2	BUSHING
3	9114-5134	1	LUG REWORK ASSY (includes items 2 & 4)
4	9114-6111	1	LUG WELD
5	8821-1117	2	SOCKET HEAD CAPSCREW, 1/2-13x4-1/2, GR8
6	8855-1109	2	LOCKWASHER, 1/2
7	8852-1208	2	HEX LOCKNUT, 1/2
8	8858-1323	4	RETAINING RING
9	8821-1121	2	SOCKET HEAD CAPSCREW, 1/2-13x6-1/2, GR8
10	9112-3030	4	BACK-UP RING
11	8859-1032	2	O-RING
12	8692-1268	2	LIP SEAL
13	9112-3029	2	O-RING
14	9114-1424	2	LOWER KING PIN
15	8855-1153	2	LOCKWASHER, 5/8
16	8821-2321	2	SOCKET HEAD CAPSCREW, 5/8-11x3-3/4, GR8
17	9114-5135	1	LUG REWORK ASSY (includes items 2 & 18)
18	9114-6112	1	LUG WELD
19	9108-1693	2	UPPER KING PIN
20	9112-3027	2	BUSHING

** Revised illustration.*

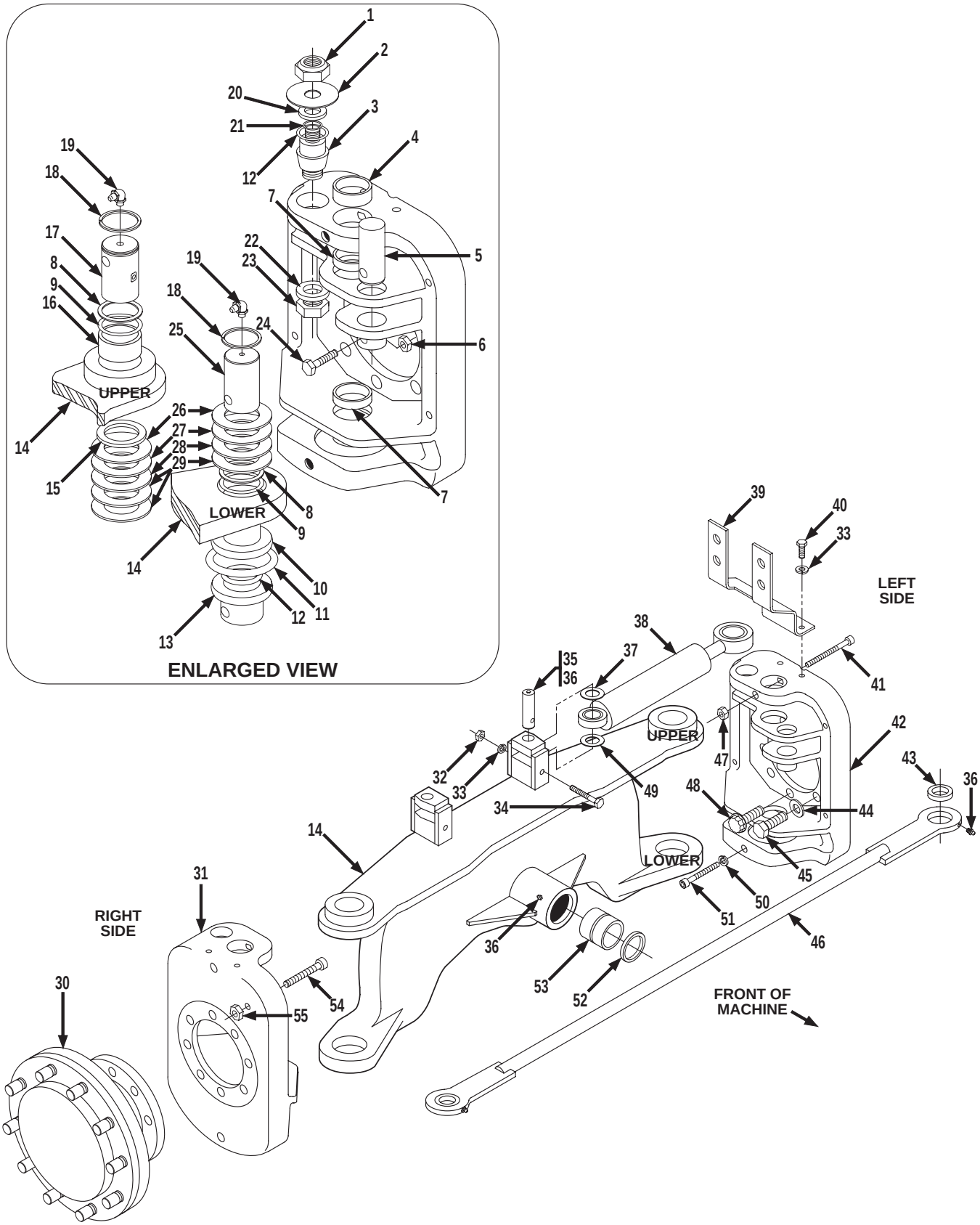
ENLARGED VIEW
UPPER
LOWER
LEFT SIDE
RIGHT SIDE
FRONT OF MACHINE

NOTE #1: Customer to use existing wheel hubs & hardware, drive motors, drive motor tube assemblies, and drain line hoses or order separately if replacement is required.

NOTE #2: Cylinder base end must be free to rotate. Shim steer cylinder base end as required to maintain a total max. gap of 1/16".

NOTE #3: Shim bottom knuckles as required to maintain no more than 1/32" movement. Shim top knuckles as required to maintain no more than 1/16" gap. Must have a minimum of one shim.

Item	Part No.	Qty.	Description Of Part
	9133-5026	Ref	REAR AXLE ADVANTAGE KIT (includes all items except 30, 44, 45 & 48)
1	8852-1312	2	HEX LOCKNUT, 3/4-10 (torque to 160-175 ft.lbs.)
2	9108-1415	2	DIRT SHIELD
3	9104-1481	2	STEERING CYLINDER PIN (knuckle end)
4	9112-1239	2	BUSHING
5	9104-1439	2	TIE ROD PIN
6	8852-1306	2	LOCKNUT, 3/8-16
7	9112-1240	4	BUSHING
8	9112-3030	4	BACK-UP RING
9	8859-1032	4	O-RING
10	9112-3027	2	BUSHING (lower)
11	9112-3029	2	O-RING
12	8859-1104	4	O-RING
13	9112-1091	2	THRUST BUSHING
14	9116-6012	1	REAR AXLE WELDMENT (includes items 10, 16 & 53)
15	8692-1268	2	LIP SEAL
16	9112-3028	2	BUSHING (upper)
17	9108-1693	2	UPPER KING PIN
18	8858-1323	4	RETAINING RING
19	8867-1022	4	LUBE FITTING, 30 DEGREES, 1/8
20	9104-1732	AR	SPACER
21	8859-1019	2	O-RING
22	9104-1459	2	WASHER
23	8850-1416	2	HEX JAM NUT,1-14 (torque to 225-250 ft. lbs.)
24	8320-1140	2	HEX HD CAPSCREW, 3/8-16X2-3/4, GR8
25	9114-1424	2	LOWER KING PIN
26	9104-1596	AR	SHIM (20 gauge, see note #3)
27	9104-1449	AR	SHIM (.060 thick, see note #3)
28	9104-1450	AR	SHIM (.0478 thick, see note #3)
29	9104-1451	AR	SHIM (.106 thick, see note #3)
30		2	DRIVE HUB (use existing hubs, see page 2-2, 6-6 & 6-7 for details)

Item	Part No.	Qty.	Description Of Part
31	9112-0004	1	R.H. STEERING KNUCKLE
32	8850-1006	2	HEX NUT, 3/8-16
33	8855-1011	6	LOCKWASHER, 3/8
34	8320-1144	2	HEX HD CAPSCREW, 3/8-16X5-3/4, GR5
35	9108-1695	2	STEERING CYLINDER PIVOT PIN (axle end)
36	8867-1001	6	LUBE FITTING, STRAIGHT, 1/8
37	9104-1598	AR	SHIM (.060 thick, see note #2)
38		2	STEERING CYLINDER ASSY (see page 10-8 for details)
39	9108-1523	1	L.H. TUBE SUPPORT
	9108-1522	1	R.H. TUBE SUPPORT
40	8820-1035	4	HEX HD CAPSCREW, 3/8-16X1, GR5
41	8821-1121	2	SOCKET HD CAPSCREW, 1/2-13X6-1/2, GR8
42	9112-0003	1	L.H. STEERING KNUCKLE
43	9104-3247	2	SELF-ALIGNING BUSHING
44		12	HARDENED WASHER, 3/4 (use existing hardware, see page 2-2 for details)
45		12	HEX HD CAPSCREW, 3/4-10X2 (use existing hardware, see page 2-2 for details)
46	9116-6063	1	TIE ROD (includes item 43)
47	8852-1208	2	HEX LOCKNUT, 1/2
48		2	CAPSCREW 12 PT., 3/4-10X2, GR8 (use existing hardware, see page 2-2 for details)
49	9020-1918	AR	SHIM (10 gauge, see note #2)
50	8855-1153	2	LOCKWASHER, 5/8
51	8821-2321	2	SLOT HD CAPSCREW, 5/8-11X3-3/4,GR8
52	2460-1570	2	LIP SEAL
53	9112-3031	2	BUSHING
54	8821-2321	2	SOCKET HD CAPSCREW, 5/8-11X3-3/4, GR8
55	8850-1110	2	HEAVY HEX JAM NUT, 5/8-11

OPTIONAL EQUIPMENT
(9103-3387) 5-Button Handle
Starting Serial No. 0355001
Original Issue 6-99

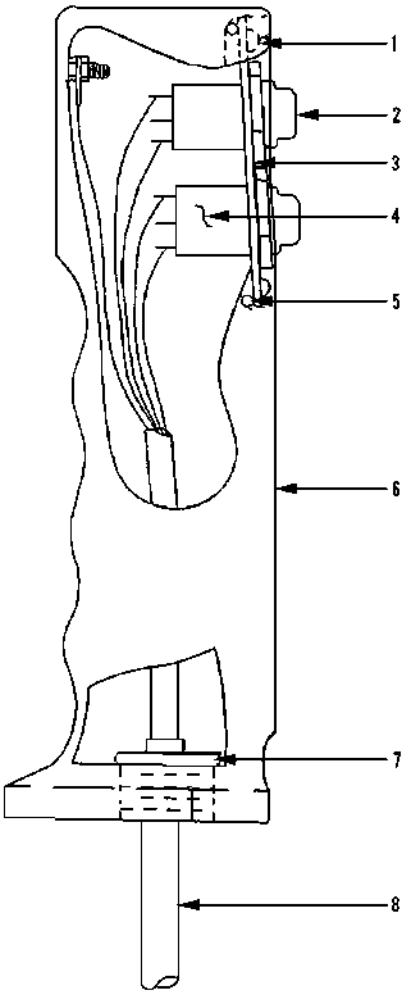

Item	Part No.	Qty.	Description Of Part
	9103-3387	1	5-BUTTON HANDLE (includes all items)
1	9136-4015	3	FACEPLATE SCREW
2	9136-4016	5	PUSHBUTTON BOOT
3	9136-4017	1	FACEPLATE
4	9136-4018	5	PUSHBUTTON SWITCH
5	9136-4019	1	FACEPLATE GASKET
6	9136-4020	1	HOUSING
7	9136-4021	1	CABLE STOP
8	9136-4022	1	CABLE (2.75 ft.)

OPTIONAL EQUIPMENT
(9112-5055) Stop Light Installation
Starting Serial No. 0188002
Original Issue 10-00

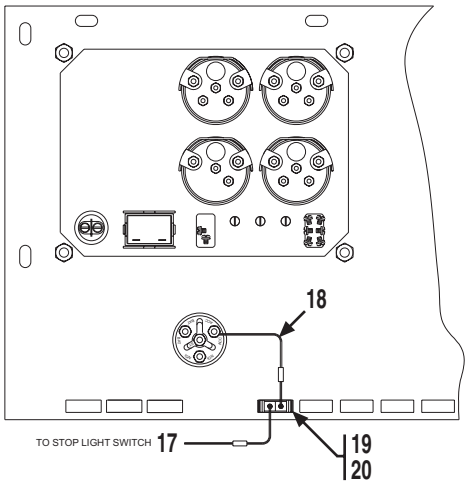

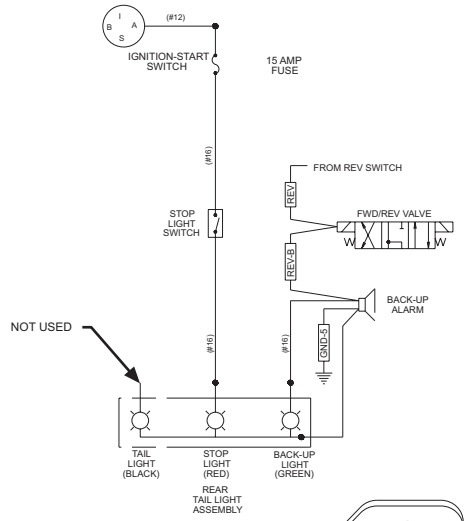

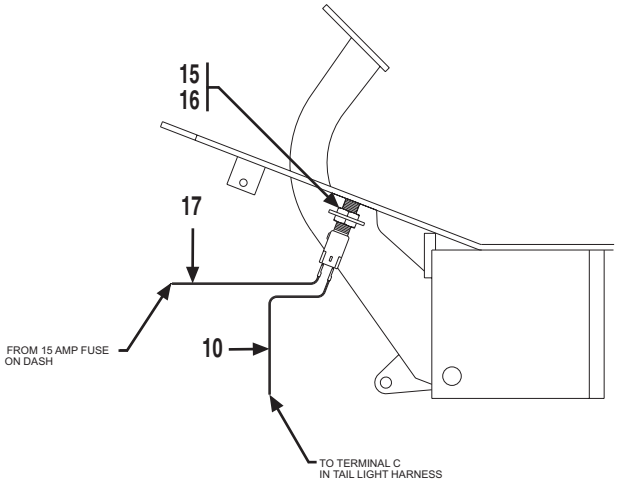

STOPLIGHT SWITCH MOUNTING ON BRAKE PEDAL

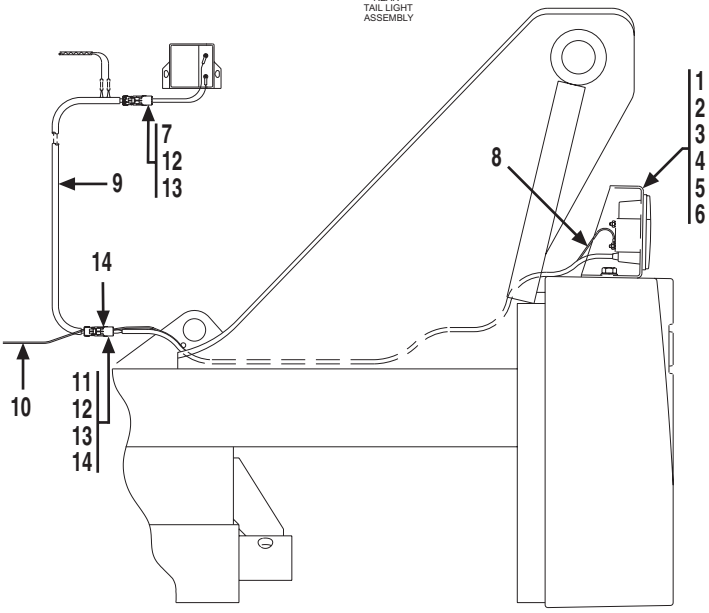

Item	Part No.	Qty.	Description Of Part
	9112-5055	1	STOP LIGHT INSTALLATION, (includes all items)
1	9112-1145	1	TAIL LIGHT HOUSING
2	9112-1146	1	TAIL LIGHT BRACKET
3	9136-5045	1	TAIL LIGHT ASSEMBLY, (includes the following seven items)
	9112-3065	1	TAIL LIGHT
	8666-1147	38"	WIRE, 16 GAUGE, (black)
	8666-1149	38"	WIRE, 16 GAUGE, (green)
	8666-1152	38"	WIRE, 16 GAUGE, (red)
	8668-3480	3	BUTT CONNECTOR
	8203-3996	45"	WIRE LOOM
	8668-3122	2	TIE WRAP
4	8820-1108	1	HEX HD CAPSCREW, 3/4-10X1-1/4, GR5
5	8856-1115	1	FLAT WASHER, 3/4

Item	Part No.	Qty.	Description Of Part
6	8855-1016	1	LOCKWASHER, 3/4
7	8096-3058	1	W. PACK CONNECTOR, (shroud)
8	9114-1364	1	JUMPER WIRE
9	9114-3210	1	TAIL LIGHT HARNESS
10	9114-1257	1	JUMPER WIRE
11	8096-3062	1	W. PACK CONNECTOR, (shroud)
12	8096-3069	5	W. PACK CONNECTOR, (male pin)
13	8096-3066	5	W. PACK CONNECTOR, (cable seal)
14	8096-3070	2	W. PACK CONNECTOR, (cavity plug)
15	9114-1197	1	MOUNTING TAB
16	9114-3117	1	STOPLIGHT SWITCH
17	9114-1256	1	JUMPER WIRE
18	9114-1259	1	JUMPER WIRE
19	9114-3108	1	FUSE HOLDER
20	7736-3268	1	FUSE, 15 AMP

GRADALL®

JLG®

JLG Industries, Inc.
1 JLG Drive
McConnellsburg PA. 17233-9533
USA
Phone: (717) 485-5161
Customer Support Toll Free: (877) 554-5438
Fax: (717) 485-6417

JLG Worldwide Locations

JLG Industries (Australia)
P.O. Box 5119
11 Bolwarra Road
Port Macquarie
N.S.W. 2444
Australia
Phone: (61) 265 811 111
Fax: (61) 265 810 122

JLG Latino Americana Ltda.
Rua Eng. Carlos Stevenson,
80-Suite 71
13092-310 Campinas-SP
Brazil
Phone: (55) 193 295 0407
Fax: (55) 193 295 1025

JLG Industries (UK)
Unit 4 & 5
Bentley Avenue
M24 2GP Middleton
Stockport
England
Phone: (44) 161 654 1000
Fax: (44) 161 654 1003

JLG EQS
Z.I. De Beaulieu
47400 Fuillet
France
Phone: (33) 553 848 584
Fax: (33) 553 848 588

JLG Deutschland GmbH
Max Planckstrasse 21
D-27721 Ritterhude/lhlpohl
Bei Bremen
Germany
Phone: (49) 421 693 500
Fax: (49) 421 693 5035

JLG Equipment Services Ltd.
Rm 1107 Landmark North
39 Lung Sum Avenue
Sheung Shui N.T.
Hong Kong
Phone: (852) 2639 5783
Fax: (852) 2639 5797

JLG Industries (Italia)
Via Po. 22
20010 Pregnana Milanese - MI
Italy
Phone: (39) 029 359 5210
Fax: (39) 029 359 5845

JLG Europe B.V.
Polaris Avenue 63
2132 JH Hoofddorp
The Netherlands
Phone: (31) 235 655 665
Fax: (31) 235 572 493

JLG Polska
Ul. Krolewska
00-060 Warsawa
Poland
Phone: (48) 914 320 245
Fax: (48) 914 358 200

JLG Industries (Scotland)
Wright Business Centre
1 Lonmay Road
Queenslie, Glasgow G33 4EL
Scotland
Phone: (44) 141 781 6700
Fax: (44) 141 773 1907

Plataformas Elevadoras
JLG Iberica, S.L.
Trapadella, 2
P.I. Castellbisbal Sur
08755Castellbisbal, Barcelona
Spain
Phone: (34) 937 724 700
Fax: (34) 937 711 762

JLG Industries (Sweden)
Enkopingsvagen 150
Box 704
SE - 17527 Jarfalla
Sweden
Phone: (46) 850 659 500
Fax: (46) 850 659 534