GRADALL®

Illustrated Parts Manual

Models
534B-6
534B-8

S/N 8344001L thru 0144870S

P/N - 9020-7316

Revised July 6, 2007

NQA ISO9001 REGISTERED COMPANY
UKAS QUALITY MANAGEMENT 015

JLG®



SECTION 1 – INTRODUCTION

Table of Contents ..... 1-1 thru 1-4
Alphabetical Index ..... 1-5 thru 1-8
Service Kits ..... 1-9 thru 1-11
Part Number Index ..... 1-12 thru 1-28

SECTION 2 – CHASSIS & ATTACHING PARTS

Frame Shrouding & Trim 2-1
Cab Enclosure, Wiper and Defroster 2-2
Cab Heater and Piping 2-3
Front Axle Cradle and Mounting 2-4
Rear Steering Axle and Attaching Parts 2-5

SECTION 3 – BOOMS

First and Second Boom Sections 3-1
Third Boom Section, Push Beam & Cable 3-2, 3-3
Quick Switch Assembly 3-4

SECTION 4 – ATTACHMENTS & ACCESSORIES

48" & 66" Carriage and Sand Bucket 4-1
Truss Boom 4-2
Winch - Truss Boom 4-3
Outriggers 4-4
Winch Assembly 4-5
6 Foot Vertical Mast 4-6
Glow Plug Installation 4-7
Pintle Hook Installation 4-8

SECTION 5 – ENGINE & ATTACHING PARTS

Waukesha Diesel Engine Mounting 5-1
Perkins Diesel Engine Mounting 5-1
Fuel Tank & Lines 5-2
Radiator & Hoses 5-3
Ether Starting Kit 5-4
Air Cleaner Piping (Waukesha) 5-5
Air Cleaner Piping (Perkins) 5-5
Air Cleaner 5-6

SECTION 6 – DRIVE TRAIN

Transmission Mounting & Controls 6-1
Flex Plate and Torque Converter 6-2
Case and Converter Housing 6-3
Converter Housing Attaching Parts 6-4
Clutch and Gear Group (Rev., 2nd and low) 6-5

SECTION 6 - DRIVE TRAIN (continued)

Clutch and Gear Group (Forward, output and third) 6-6
Clutch Assemblies 6-7
Modulator Valve 6-8
Control Valve 6-9
Drive Shaft 6-10
Housing Assembly 6-11
Front Axle Assembly 6-11
Differential Carrier 6-12
Axle Shaft and Planetary Wheel End 6-13
Wheels and Tires 6-14
Planetary Hub 6-15

SECTION 7 – CONTROLS

Transmission, Tilt, Auxiliary & Sway with Mounting Parts (Dash) 7-1
Boom Tilt, Auxiliary & Sway 7-2
Accelerator Linkage (Waukesha) 7-3
Accelerator Linkage (Perkins) 7-3
Steering Column 7-4

SECTION 8 – BRAKES

Booster Hydraulics and Brake Lines (Waukesha) 8-1
Booster Hydraulics and Brake Lines (Perkins) 8-1
Brake and Inching Linkage (Waukesha) 8-2
Brake and Inching Linkage (Perkins) 8-3
Parking Brake and Control 8-4
Brake Cylinder and Booster 8-5
Service Brake (Soma Axle) 8-6
Parking Brake Caliper 8-7
Parking Brake Control (Mico Lock) 8-8

SECTION 9 – HYDRAULIC CIRCUITS

Tank to Pump, Drive Motor Drains and Return to Tank 9-1
Drive and Steering Control (Waukesha) 9-2
Drive and Steering Control (Perkins) 9-2
Rear Drive Hydraulics 9-3
Steering Hydraulics 9-4
Boom Lift (Waukesha) 9-5
Boom Lift (Perkins) 9-5
Crowd 9-6
Tilt and Tilt Compensating 9-7
Unit Sway 9-8
Auxiliary and Electrical 9-9

SECTION 9 - HYDRAULIC CIRCUITS (continued)

Oil Cooler and Pilot Pump 9-10
Oil Cooler and Pilot Pump (Perkins) 9-10
Truss Boom 9-11
Outrigger Hydraulics 9-12
Hydraulics & Parking Brake Lines (model 5 axle) 9-13
Accumulator Charging Valve & Lines (model 5 axle) 9-14

SECTION 10 – HYDRAULIC COMPONENTS

Lift Cylinder 10-1
Crowd Cylinder 10-2
Tilt & Tilt Compensating Cylinders 10-3,10-4
Sway Cylinder 10-5
Steering Cylinder 10-6
Main Hydraulic Control Valve 10-7
Priority Flow Control Valve 10-8
Forward-Reverse Control Valve 10-9
Series Parallel Valve 10-10
Solenoid Valve 10-11
Rear Drive Main Relief Valve 10-12
Crossover Relief Valve 10-13
Main Hydraulic Pump 10-14
Pilot Pump (Waukesha) 10-15
Pilot Pump (Perkins) 10-15
Rear Drive Motor 10-16
Winch Motor 10-17
Filter-Oil Reservoir 10-18
Directional Control Valve 10-19
Accumulator Charge Valve 10-20
Brake Valve 10-21
Parking Brake Valve 10-22
Outrigger Valve Assembly 10-23
Dual P.O. Check Valve 10-24
Dual P.O. Check Valve 10-25
Counterbalance Control Valve 10-26

SECTION 11 – ELECTRICAL

Dash Wiring 11-1
Wiring-Frame and Waukesha Engine 11-2
Wiring-Frame and Perkins Engine 11-3
Wiring-Lights 11-4

SECTION 12 – MISCELLANEOUS

Frame Decals 12-1
Boom Decals 12-2

SECTION 13 – OPTIONAL EQUIPMENT

Joystick 13-1
Rear Wiper Installation 13-2
Rotating Beacon 13-3
Auxiliary Hydraulics 13-4
Winch Drain Line 13-5
Stabilizer 13-6
Auxiliary Controls Assembly 13-7
Pintle Hook 13-8
Steer Axle Advantage Kit 13-9
*Steering Cylinder 13-10

ACCELERATOR CABLE 7-3
ACCELERATOR PEDAL 7-3
AIR CLEANER 5-6
AIR CLEANER ELEMENT 5-6
AIR CLEANER SERVICE INDICATOR 5-5
ALTERNATOR 11-3
ATTACHMENTS ..... 4-1 thru 4-8

BACK-UP ALARM 11-2
BATTERY 11-3
BATTERY HOLD DOWN 11-3
BATTERY CABLES 11-3
BEARING PADS (Boom Sections) 3-1, 3-1, 3-2, 3-3
BLOCK HEATER 2-3
BOOM DECALS 12-2
BOOM SECTIONS ..... 3-1 thru 3-3
BRAKE PEDAL 8-2, 8-3
BRAKE VALVE 10-21
BRAKE WARNING LIGHT 11-1
BREATHER (Filler cap) 5-2, 9-1
BUCKETS 4-1
BOOM HYDRAULICS 9-5, 9-6, 9-7

CARRIAGES 4-2, 4-5, 4-6
COMPENSATING CYLINDER 10-4
COMPENSATING CYLINDER HYDRAULIC CIRCUIT 9-8
CONTROL VALVES ..... 10-9 thru 10-13, 10-19, 10-21, 10-23, 10-24
CROWD CYLINDER 10-2
CROWD CYLINDER HYDRAULIC CIRCUIT 9-7

DECALS 12-1, 12-2
DECK 2-1
DRIVE CIRCUIT 9-2, 9-3, 9-4
DUAL P.O. CHECK VALVE 10-24, 10-25
DUMP CIRCUIT 9-2

ELECTRICAL SYSTEMS ..... 11-1 thru 11-4
ENGINE 5-1
ENGINE MOUNT 5-1

ENGINE THROTTLE CONTROL 7-3
EXHAUST PIPE 5-1
EXHAUST SYSTEM 5-1

FIRST BOOM SECTION 3-1
FIRST BOOM SECTION MOUNTING PIN 3-1
FILTERS 5-1, 5-2, 10-18
FILTER ELEMENT 10-18
FLOW DIVIDER ASSY 10-8
FOOT SWITCH 8-3
FRAME 2-1
FRAME SHROUDING & TRIM 2-1
FRONT AXLE 2-4
FRONT AXLE MOUNTING 2-4
FRONT AXLE DIFFERENTIAL CARRIER 6-12
FRONT AXLE HOUSING 6-11
FRONT AXLE SHAFT & PLANETARY WHEEL END 6-13
FUEL FILTERS 5-1
FUEL GAUGE 11-1
FUEL LEVEL SENDER 5-2, 11-2
FUEL LINES 5-2
FUEL TANK & CAP 5-2

GAUGE PANEL ASSEMBLY 11-1
GEAR PUMP 5-1
GLOW PLUG 4-7

HOOD 2-1
HORN 11-2
HORN WIRING 11-1, 11-2
HOURMETER 11-2, 11-3
HYDRAULIC CIRCUITS ..... 9-1 thru 9-14

IGNITION SWITCH 11-1
INCHING VALVE 8-3
INSTRUMENT PANEL 11-1

JOYSTICK 13-1
JOYSTICK HYDRAULIC CIRCUIT 13-1

KITS 1-9, 1-10, 1-11

LIFT CYLINDER 10-1
LIFT CYLINDER HYDRAULIC CIRCUIT 9-5

MAIN BOOM SECTIONS ..... 3-1 thru 3-4
MAIN CONTROL VALVE 10-7
MAIN HYDRAULIC PUMP 5-1, 10-14
MISCELLANEOUS ELECTRICAL COMPONENTS ..... 11-1 thru 11-4
MUFFLER 5-1

NEGATIVE BATTERY CABLE 11-2, 11-3, 11-3.1

OIL COOLER 9-10
OIL FILTER 5-1, 10-18
OIL PRESSURE GAUGE 11-1
OIL PRESSURE SENDER 11-2
OIL RESERVOIR 9-1
OIL SUPPLY & PRESSURE LINES 9-1

POSITIVE BATTERY CABLE 11-2, 11-3
PUSH BEAM CABLE ..... 3-2 thru 3-3

QUICK SWITCH ASSEMBLY 3-5, 3-6

RADIATOR & HOSES 5-3
REAR AXLE 2-5
REAR AXLE MOUNTING PIN 2-5
REAR DRIVE MOTOR 10-16
REAR STEERING AXLE DRIVE HUB 6-15
REPAIR KITS 1-9, 1-10
RESERVOIR & FILTERS 9-1, 10-18

SEAT 2-1
SEAT BELT 2-1
SECOND BOOM SECTION 3-1
SERVICE BRAKE LINES 8-1
SERVICE KITS 1-9, 1-10, 1-11
SIX FOOT MAST 4-6

SOLENOID VALVE 10-11
STARTER 5-1, 11-2, 11-3
STARTER SOLENOID 11-2, 11-3
STEERING COLUMN 7-4
STEERING CYLINDER 10-6
STEERING CYLINDER HYDRAULIC CIRCUIT 9-4
STEERING KNUCKLES 2-5
STEERING ORBITROL 7-5
STEERING WHEEL 7-5
SUPPLY HYDRAULIC CIRCUIT 9-1
SWAY CONTROL HANDLE & LINKAGE 7-1, 7-2
SWAY CYLINDERS 10-5
SWAY CYLINDER HYDRAULIC CIRCUIT 9-8

THIRD BOOM SECTION 3-2, 3-3
TIE ROD ARM 2-5
TILT CONTROL HANDLE & LINKAGE 7-1
TILT CYLINDER 10-3, 10-4
TILT CYLINDER HYDRAULIC CIRCUIT 9-7

WATER TEMPERATURE GAUGE 11--1
WATER TEMPERATURE SENDER 11-2, 11-3
WHEELS & TIRES 6-15
WIRING HARNESS ..... 11-1 thru 11-5

SECTION	PAGE NO.	PART NUMBER	DESCRIPTION
2	2-5	9103-5128	Axle Rebuild Kit
2	2-5	9104-5122	Steering Knuckle Kit
2	2-5	9106-5036	Axle Rebuild Kit
5	5-4	9020-6316	Ether Start Kit
5, 6	5-1, 6-1	9103-5141	Engine &Transmission Filter Kit
6	6-1	9103-4326	Transmission O-Ring Kit
6	6-1	9103-4327	Torque Converter O-Ring Kit
6	6-12	9020-7926	Differential Carrier Shim Kit
6	6-12	9020-7927	Differential Carrier Shim Kit
6	6-13	9020-3891	Axle Shaft Shim Kit
6	6-13	9104-4181	Adjusting Shim Kit
6	6-13	9104-4335	Sealing Kit
6	6-13	9104-4453	Spring Washer Kit
6	6-15	9103-4122	Cluster Gear Kit
7	7-5	9020-6567	Steering Orbitrol Seal Kit
8	8-2, 8-3	9020-7888	Resevoir Fill Kit
8	8-2	9103-5070	Waukesha Inching Kit
8	8-2	9103-5111	Perkins Inching Kit
8	8-2	9103-5110	Microswitch Kit
8	8-3	9103-4018	Inching Valve Seal Kit
8	8-5	9020-8131	Brake Cylinder Repair Kit
8	8-5	9020-8132	Booster Seal Kit
8	8-5	9103-4079	Brake Cylinder Repair Kit
8	8-6	9020-7951	Service Brake Repair Kit
8	8-6	9020-7952	Service Brake Repair Kit
8	8-7	9040-1463	Parking Brake Repair Kit
8	8-8	9020-3341	Parking Brake Repair Kit
9	9-1	9103-5295	Pump Modification Kit
9	9-1	9103-5296	Pump Modification Kit
9	9-1	9103-5297	Pump Modification Kit
9	9-5	9103-4030	Boom Lift Seal Kit
9	9-7	9103-4030	Compensating Hydraulics Seal Kit
9	9-12	9103-5091	Retrofit Kit
9	9-12	9103-5092	Retrofit Kit

SECTION	PAGE NO.	PART NUMBER	DESCRIPTION
9	9-13	9103-4018	Valve Seal Kit
10	10-1	9020-7956	Lift Cylinder Seal Kit
10	10-1	9020-7953	Lift Cylinder Seal Kit
10	10-1	9103-4140	Lift Cylinder Seal Kit
10	10-2	9020-8023	Crowd Cyilnder Seal Kit
10	10-2	9103-4223	Crowd Cylinder Seal Kit
10	10-3, 10-4	9103-4150	Tilt Compensating Cylinder Seal Kit
10	10-3	9020-1553	Tilt Compensating Cylinder Seal Kit
10	10-3	9103-4049	Tilt Compensating Cylinder Seal Kit
10	10-3, 10-4	9020-7954	Tilt Compensating Cylinder Seal Kit
10	10-5	9104-4205	Sway Cylinder Seal Kit
10	10-5	9104-4275	Sway Cylinder Seal Kit
10	10-6	9020-2551	Steering Cylinder Seal Kit
10	10-6	9103-4145	Steering Cylinder Seal Kit
10	10-7	9103-4105	Stud Assy Kit
10	10-7	9103-4070	Stud Assy Kit
10	10-7	9103-4237	Main Control Valve Seal Kit
10	10-7	9103-4236	Main Control Valve Seal Kit
10	10-7	9020-6419	Retainer Plate Kit
10	10-7	9103-4159	Spool Seal Kit
10	10-7	9020-6417	Section Seal Kit
10	10-11	9104-4001	Solenoid Valve Seal Kit
10	10-12	9020-8057	Rear Drive Main Relief Seal Kit
10	10-15	9020-8039	Pilot Pump Seal Kit
10	10-15	9103-4019	Pilot Pump Seal Kit
10	10-17	9020-8212	Winching Shaft Seal Kit
10	10-19	9103-4017	Directional Control Valve Seal Kit
10	10-20	9104-4538	Large Spring Repair Kit
10	10-20	9104-4539	Spool & Small Spring Repair Kit
10	10-20	9104-4540	Element & Seal Kit
10	10-23	9103-4124	Tie Rod Kit
10	10-26	9103-4276	Counterbalance Control Valve Seal Kit
11	11-4	9020-0347	Gauge Light Wiring Kit
13	13-7	9103-3239	Auxiliary Controls Conversion Kit
13	13-9	9104-5129	Steering Axle Advantage Kit

SECTION	PAGE NO.	PART NUMBER	DESCRIPTION
13	13-9	9103-5240	Steering Knuckle Kit
13	13-9	9104-5152	Steering Cylinder Pin Kit
13	13-9	9103-4301	Steering Cylinder Seal Kit

INDEX

PART NUMBER	PAGE
0510-1441	4-4
1200-1234	5-1
2443-1386	4-6
2460-1570	13-8
2464-1328	2-3
2474-1047	11-3
2477-1004	4-7
2492-1332	5-1
2492-1393	11-2, 11-3
2492-1394	11-3
2492-1395	11-3
7702-3003	12-1
7702-3006	12-1
7702-3007	12-1
7702-3008	12-1
7710-3006	11-3
7710-3044	2-1
7710-3089	9-13
7710-3138	5-5
7710-4012	6-2
7710-4016	6-4
7710-4027	6-2
7710-4031	6-2
7710-4032	6-2
7710-4033	6-2
7710-4034	6-2
7710-4035	6-2
7710-4036	6-2
7710-4037	6-2
7710-4039	6-2
7710-4040	6-2
7710-4042	6-2
7710-4044	6-2
7710-4046	6-2
7710-4048	6-3, 6-4
7710-4057	6-3
7710-4085	6-3, 6-4, 6-6
7710-4086	6-3
7710-4087	6-6
7710-4088	6-6
7710-4096	6-3
7710-4097	6-3
7710-4098	6-3
7710-4102	6-3
7710-4103	6-3
7710-4107	6-3
7710-4109	6-3
7710-4110	6-3
7710-4111	6-3
7710-4112	6-3
7710-4113	6-3
7710-4116	6-3
7710-4118	6-3
7710-4119	6-3
7710-4128	6-6
7710-4142	6-6
7710-4143	6-6
7710-4158	6-5
7710-4164	6-4
7710-4177	6-5
7710-4179	6-5
7710-4180	6-5
7710-4181	6-4, 6-5
7710-4182	6-5
7710-4184	6-5, 6-6
7710-4185	6-5, 6-6
7710-4186	6-5, 6-6
7710-4187	6-5, 6-6
7710-4188	6-7
7710-4189	6-7
7710-4190	6-7
7710-4191	6-7
7710-4192	6-7
7710-4193	6-7
7710-4194	6-7
7710-4197	6-4, 6-6
7710-4198	6-6
7710-4199	6-6
7710-4201	6-6
7710-4202	6-6
7710-4204	6-4, 6-6
7710-4205	6-6
7710-4206	6-5, 6-6
7710-4207	6-5, 6-6
7710-4208	6-5, 6-6
7710-4209	6-7
7710-4211	6-6
7710-4212	6-6
7710-4213	6-6
7710-4214	6-6
7710-4215	6-6
7710-4219	6-5
7710-4220	6-5
7710-4221	6-5
7710-4222	6-5
7710-4223	6-5
7710-4224	6-5
7710-4225	6-5
7710-4226	6-5
7710-4227	6-5
7710-4230	6-7
7710-4231	6-5
7710-4232	6-5
7710-4250	6-4
7710-4253	6-4
7710-4254	6-4
7710-4255	6-4
7710-4257	6-4
7710-4258	6-4
7710-4272	6-9
7710-4273	6-9
7710-4276	6-9
7710-4277	6-9
7710-4278	6-9
7710-4279	6-9
7710-4283	6-3
7710-4284	6-3
7710-4285	6-3
7712-4002	6-15
7713-1088	13-1, 9-4, 9-10, 9-13
7713-3035	9-10
7713-3052	9-10
7713-3089	9-13
7713-3139	8-1
7713-3140	8-1, 9-12
7713-3147	9-9, 9-10
7713-3167	13-1, 9-1, 9-2, 9-10, 9-13
7713-3168	9-12
7713-3177	8-1, 9-12
7713-3198	9-1
7713-3209	9-10
7713-3226	4-5
7713-3342	9-1, 9-10, 9-13
7713-3389	9-12
7713-3390	9-12
7713-3447	9-1, 9-2, 9-13
7713-3459	4-5
7713-3498	9-10, 9-12
7713-3499	9-10, 9-12
7713-3875	9-10
7713-4059	9-1
7713-4197	8-1
7714-1077	3-3
7714-3003	2-1
7714-3004	7-1
7714-3006	2-1, 3-3, 7-1
7716-3020	2-1
7716-3168	9-12
7722-3003	11-2, 11-3
7724-1003	9-10
7733-3027	12-1
7734-3018	12-1

INDEX

PART NUMBER	PAGE
7736-3065	9-1
7738-3154	5-5
7738-4267	10-11
8209-2118	5-2
8319-1007	5-1
8319-1011	5-1, 8-3
8319-1019	5-1
8319-1028	5-1, 8-3
8319-3008	8-3, 9-10
8319-3009	6-11, 8-3, 9-10
8320-1011	2-5
8320-1022	3-3
8320-1024	2-5
8320-1026	2-5
8320-1031	2-4
8320-1040	2-5
8320-1057	10-17
8320-1062	2-5
8320-1073	13-6
8320-1074	2-5
8320-1102	2-5
8320-1129	2-5
8320-1140	13-8
8320-1144	13-8
8343-1005	9-10
8345-1102	9-7
8345-1104	9-11
8348-1182	3-1
8348-3113	11-3
8348-3114	11-3, 8-3
8348-3419	6-12
8348-3497	5-2
8360-1011	12-1, 12-2
8362-1122	9-3
8364-1675	12-1
8365-1133	9-8
8366-1145	2-2
8366-1316	9-2, 9-4
8366-2107	9-10
8366-3087	9-10
8367-3079	9-1
8368-1481	5-1
8368-3175	5-1, 9-14
8368-3308	5-1, 5-3
8368-3311	2-1
8423-1107	5-3
8452-1056	5-3, 9-10
8471-1342	9-1, 9-3
8471-1369	9-1
8471-6015	9-5
8471-6039	9-6
8471-6238	9-10
8471-6251	9-10, 9-14
8471-6377	4-5
8471-6426	13-6
8471-6448	9-5
8471-6985	9-10
8471-7252	4-5
8471-7413	9-10
8471-7458	13-1
8471-7461	9-10
8471-7463	9-10
8471-7464	9-2
8471-7466	9-10, 9-13
8471-7468	9-10
8471-7470	5-1, 9-10
8471-7473	9-12
8471-7474	9-12
8471-7477	9-12
8471-7479	9-12
8471-7489	9-10
8471-7508	9-13
8471-7517	9-14
8471-7518	9-10, 9-14
8471-7519	13-1
8471-7520	9-1, 9-10
8471-7521	9-10
8471-7522	8-1, 9-13
8471-7523	8-1, 9-13
8471-7524	8-1
8471-7525	9-4
8471-7527	4-4, 9-12
8471-7528	4-4, 9-12
8471-7546	9-4
8471-7547	9-4
8471-7548	9-4
8471-7549	9-4
8471-7550	9-4
8471-7553	9-4
8471-7561	9-13, 9-14
8471-7570	5-3
8471-7571	5-3
8471-7577	9-1, 9-10
8471-7586	9-1
8471-7587	13-1, 9-1
8471-7604	8-1
8471-7608	9-6
8471-7610	9-14
8471-7638	9-14
8471-7640	4-6
8471-7797	9-10
8471-7799	9-5
8471-7842	9-1
8471-7847	13-6
8471-7848	13-6
8471-7882	9-4
8503-1160	5-5
8505-1384	13-1
8507-1128	5-3
8507-1340	6-1
8508-1016	4-4
8510-1098	2-5
8511-1214	5-5
8540-1340	2-5, 3-1, 5-1, 8-2
8568-1076	9-3
8584-1094	11-2, 11-3
8589-1102	9-6
8652-1144	9-9
8654-1381	5-2
8656-1309	5-1
8664-1057	3-4
8666-1083	11-1
8666-1084	11-3
8666-1143	11-3
8667-1112	9-10
8667-1164	2-1, 5-1
8667-1224	5-3
8668-3117	7-1
8668-3118	7-3
8668-3193	2-3
8668-3330	5-2
8668-3480	11-3, 13-2, 8-3
8682-1248	9-10
8688-3327	5-5
8688-3469	9-1
8692-1268	13-8
8692-3006	13-7, 9-7, 9-9, 9-10
8820-1001	5-2
8820-1003	13-2, 2-1, 2-2, 3-2, 3-3, 5-3, 5-4, 8-3, 9-9
8820-1004	13-1
8820-1005	2-1, 2-3, 3-4, 8-2, 9-10
8820-1007	3-2, 3-3
8820-1008	3-1, 8-3, 9-6, 9-10
8820-1009	5-1, 9-14
8820-1014	11-4, 13-3
8820-1017	6-3
8820-1018	10-18, 13-1, 5-5
8820-1020	5-5, 7-3, 9-2
8820-1021	4-2, 5-2, 7-3
8820-1022	5-3
8820-1027	4-2
8820-1028	9-2, 9-4

INDEX

PART NUMBER	PAGE
8820-1029	5-1, 5-4
8820-1030	5-1
8820-1031	2-2, 8-1, 9-10
8820-1032	11-4, 8-2, 8-3, 9-9
8820-1033	2-1, 3-1, 3-2, 3-3, 5-1, 6-2, 7-4, 9-1, 9-4
8820-1035	13-8, 3-1, 4-3, 5-5, 6-4, 9-1, 9-5
8820-1036	4-2, 4-3, 6-1, 6-4, 9-1, 9-3
8820-1037	3-4, 4-3, 4-6, 5-1, 7-4, 8-3, 8-4, 9-4, 9-12
8820-1038	10-15, 3-2, 3-3, 3-4, 5-3
8820-1039	2-2, 5-3
8820-1040	10-24, 4-4
8820-1041	10-25, 2-5, 9-8
8820-1042	9-8
8820-1045	3-2, 3-3, 5-1
8820-1046	6-3
8820-1050	2-1
8820-1053	6-3
8820-1062	6-4
8820-1064	3-1
8820-1065	3-2, 3-3, 3-4, 5-1, 5-2, 7-1
8820-1066	2-1, 4-2, 5-1, 6-1, 8-2, 8-3
8820-1067	2-1, 3-1, 9-1, 9-3, 9-6
8820-1068	3-1, 3-2, 4-2, 4-8, 8-2, 8-3, 9-2
8820-1069	3-1, 3-2, 4-5
8820-1070	9-2
8820-1071	5-2, 9-5
8820-1072	10-7, 5-1, 9-6
8820-1073	4-2, 5-1, 9-6, 9-7
8820-1077	2-5
8820-1096	4-2
8820-1097	2-5
8820-1104	9-5, 9-7, 9-8
8820-1105	3-1, 3-2, 3-3, 4-1, 9-5, 9-6
8820-1107	3-2, 3-3
8820-1110	6-1
8820-1119	2-4, 6-1
8820-1120	6-1
8820-1328	7-2
8820-1352	6-2
8820-1532	3-2, 3-3
8820-1533	3-2, 3-3
8820-1534	5-1
8820-1536	3-2, 3-3
8820-1537	6-1
8820-1549	5-1
8820-1564	3-2, 3-3
8820-4912	12-1
8821-1032	8-3
8821-1046	9-14
8821-1069	10-7, 5-1
8821-1105	9-7
8821-1121	13-8
8821-2228	8-3, 9-13
8821-2321	13-8
8822-1119	6-15
8825-1018	7-3
8825-1023	8-3
8825-1036	3-2
8825-1037	3-2, 3-3, 3-4
8826-1009	2-1
8826-1017	2-1
8826-1021	9-13
8826-1030	7-1
8830-1090	3-4
8830-1193	2-1
8830-1309	2-2
8830-1548	10-7
8830-4917	8-2
8832-1015	13-7, 2-2, 7-1
8832-1022	11-4
8832-1039	2-2
8832-1047	2-1
8834-1022	4-6
8834-4901	12-1
8840-1001	8-2
8844-1001	8-3
8850-1004	11-4, 13-1, 13-2, 13-3, 2-1, 2-2, 2-3, 3-1, 5-4, 7-3, 7-4, 8-2, 8-3, 9-6, 9-9, 9-10
8850-1005	13-1, 3-2, 4-2, 5-1, 5-4, 7-3, 8-3
8850-1006	11-4, 13-6, 13-8, 2-2, 4-2, 4-3, 4-6, 6-1, 7-1, 8-3, 8-4, 9-3, 9-5, 9-6, 9-12
8850-1007	2-1
8850-1008	10-7, 13-5, 2-5, 3-1, 4-3, 4-5, 5-1, 5-2, 7-1, 8-2, 8-3, 9-2, 9-3, 9-6, 9-7, 9-9
8850-1010	3-1, 3-2, 4-2, 5-1, 7-2, 9-5, 9-7, 9-8
8850-1012	2-4, 6-1
8850-1013	2-1
8850-1104	3-2, 3-3, 3-4
8850-1105	7-3
8850-1106	3-2, 3-3, 9-6
8850-1108	13-5, 4-5, 7-2, 8-2, 8-4, 9-7, 9-9
8850-1110	13-8, 2-5, 7-2
8850-1112	13-7
8850-1116	3-1, 3-2, 3-3
8850-1304	8-2
8850-1305	7-1, 7-2
8850-1306	7-1
8850-1404	7-3
8850-1406	10-12, 13-4, 13-7, 7-1, 7-2, 8-2, 8-3, 8-4, 9-9
8850-1408	8-2, 8-3
8850-1416	13-8
8850-1420	2-5
8850-1612	8-3
8850-1613	11-4, 7-3
8852-1005	5-1
8852-1010	3-4
8852-1016	2-4
8852-1205	5-5
8852-1206	4-4, 5-3
8852-1208	13-8, 5-1
8852-1216	2-4, 2-5
8852-1304	12-1, 2-2, 5-1
8852-1305	3-2, 3-3, 5-2, 5-3, 7-3
8852-1306	13-8, 2-5, 3-3, 3-4, 5-1
8852-1308	2-1, 3-2
8852-1310	3-2, 3-3, 4-1
8852-1312	13-8
8852-1316	2-5
8852-1605	2-1
8855-1007	8-3
8855-1009	13-1, 2-1, 5-2, 5-3, 8-3, 9-9
8855-1010	10-18, 13-1, 5-5, 6-3, 7-1, 8-3, 9-13
8855-1011	10-7, 10-9, 10-24, 10-25, 13-6, 13-8, 2-1, 2-2, 3-3, 4-3, 4-4, 4-6, 5-1, 6-1, 6-2, 6-3, 8-4, 9-1, 9-8, 9-9, 9-10, 9-12
8855-1012	5-1
8855-1013	2-1, 3-1, 3-4, 4-5, 4-8, 5-1, 9-1, 9-5
8855-1016	6-1
8855-1105	9-14
8855-1109	9-9
8855-1153	13-8
8856-1004	2-1, 4-6, 8-3
8856-1105	2-1, 3-4, 8-3

INDEX

PART NUMBER	PAGE
8856-1107	10-7, 12-1, 2-1, 5-1, 5-3, 5-4, 8-2, 9-6, 9-10
8856-1108	12-2, 3-2, 5-1, 5-3, 5-5, 7-3
8856-1109	2-1, 3-2, 3-3, 5-1, 7-3, 8-2, 8-3, 8-4, 9-9, 9-10
8856-1111	2-1, 3-1, 3-2, 5-1, 7-3
8856-1113	13-4, 4-2, 7-1, 7-2, 8-2, 9-9
8856-1115	13-7, 6-1
8856-1119	2-5
8858-1140	13-6
8858-1144	2-5
8858-1323	13-8
8859-1012	9-8
8859-1013	6-9
8859-1019	13-8, 9-1
8859-1032	13-8
8859-1102	10-26, 9-5, 9-6, 9-7
8859-1104	13-8
8859-1202	9-2, 9-6, 9-7, 9-14
8859-1204	10-10, 13-1, 8-1, 9-1, 9-2, 9-3, 9-4, 9-5, 9-6, 9-10, 9-13
8859-1205	10-8, 10-23, 13-6, 4-4, 8-1, 9-4, 9-7, 9-8, 9-10, 9-12, 9-13, 9-14
8859-1206	10-8, 10-23, 9-4, 9-10, 9-11, 9-12
8859-1207	10-23, 13-1, 13-7, 5-1, 5-3, 9-1, 9-5, 9-6, 9-7, 9-8, 9-9, 9-10, 9-12, 9-14
8859-1209	5-1, 9-2, 9-3, 9-5, 9-6, 9-7, 9-12
8859-1210	10-9, 9-1, 9-2, 9-3, 9-5
8863-1301	13-4, 13-7, 7-2, 9-9
8863-1302	7-2
8863-1303	8-3
8863-1309	13-4, 7-1, 9-9
8863-1310	3-2, 3-3
8863-1318	7-3, 8-2, 8-3
8863-1479	7-1
8863-1509	3-4
8863-3002	8-3
8864-1057	3-4
8866-1009	9-3, 9-10
8866-1011	4-5
8866-1013	4-6, 9-9
8866-1016	4-6
8866-1027	10-6
8866-1065	4-5
8866-1084	11-2
8866-1113	4-5
8866-1118	5-3
8866-1180	4-6
8866-1206	9-10
8866-1210	9-2
8866-1245	9-1, 9-10
8866-1305	8-1
8866-1306	9-1, 9-4
8866-1342	9-13
8866-1365	13-5, 9-2
8866-1366	9-2
8866-1385	13-5
8866-2003	9-2, 9-14
8866-2005	13-1, 9-4, 9-10, 9-13
8866-2006	9-4, 9-8, 9-10, 9-14
8866-2007	9-4
8866-2008	13-1, 13-7, 9-8, 9-9
8866-2010	9-2, 9-3
8866-2011	9-2
8866-2017	9-5, 9-6
8866-2018	9-13
8866-2019	9-11
8866-2020	9-7, 9-8, 9-10, 9-14
8866-2021	9-7
8866-2022	13-7, 9-9
8866-2023	9-14
8866-2024	9-10
8866-2025	9-5, 9-6, 9-7
8866-2026	9-10
8866-2028	9-2, 9-3
8866-2035	9-4
8866-2036	10-23, 9-12
8866-2038	13-1, 9-5, 9-6
8866-2059	9-11
8866-2060	10-23, 9-12
8866-2061	9-12
8866-2062	9-6, 9-7
8866-2064	10-10, 13-1, 8-1, 9-1, 9-2, 9-3, 9-4, 9-10, 9-13
8866-2065	10-23, 13-6, 8-1, 9-4, 9-12, 9-13, 9-14
8866-2067	10-23, 5-3, 9-6, 9-10, 9-12
8866-2069	9-2, 9-3
8866-2070	9-1
8866-2085	10-23, 13-6, 4-4, 5-1, 9-10, 9-12, 9-14
8866-2103	9-5, 9-8
8866-2105	13-1, 8-1, 9-10, 9-13
8866-2106	4-5, 9-7, 9-8, 9-10, 9-11, 9-13
8866-2107	13-7, 9-7, 9-9, 9-10
8866-2108	13-1, 9-5, 9-6, 9-10, 9-14
8866-2110	9-2
8866-2120	9-2, 9-7, 9-14
8866-2121	9-5
8866-2124	9-2
8866-2153	8-1
8866-2174	13-1, 9-13
8866-2180	10-9
8866-2224	8-1, 9-10
8866-2225	9-1, 9-10
8866-2239	9-1, 9-10, 9-13
8866-2240	4-5, 8-1, 9-1, 9-10, 9-14
8867-1001	10-3, 10-4, 13-8, 2-4, 2-5, 3-1, 4-2, 4-3, 6-10
8867-1008	10-3, 10-4, 13-4, 13-6, 13-7, 13-8, 2-4, 2-5, 3-2, 3-3, 3-4, 6-10, 7-1, 7-2, 8-2, 8-3, 9-9
8867-1018	2-5
8867-1022	13-8, 2-5
8867-1027	10-6, 9-3
8867-1164	2-1
8869-1345	11-3
8870-1002	9-1
8870-1003	9-10
8870-1023	5-5
8870-1035	3-2
8871-1210	5-5
8871-1212	5-2
8871-1255	5-2, 9-1
8871-1280	13-8, 9-8
8871-1282	9-1, 9-2, 9-14
8871-1284	3-2, 3-3, 9-12
8871-1381	11-2, 9-10
8871-1383	11-3, 2-3
8871-2031	5-1
8871-2073	9-10
8871-2081	5-2
8871-2231	11-3
8874-1801	5-2
8874-3000	6-1, 9-8
8874-3002	9-1, 9-2
8874-3003	9-2, 9-10, 9-14
8874-3016	9-11
8874-3018	9-2
8874-3036	9-10
8874-3038	9-10
8874-3041	6-1, 9-5, 9-6, 9-7
8874-3042	9-10
8874-3043	8-1
8874-3055	6-1

INDEX

PART NUMBER	PAGE
8882-1003	6-1
8882-1004	13-4, 13-7, 7-2, 8-2, 8-3, 8-4, 9-9
8903-1425	8-1
8998-1036	11-3
9002-0009	3-4
9002-0017	3-4
9002-0021	3-4
9002-0085	3-4
9002-0121	3-4
9002-0199	3-4
9002-0219	3-4
9002-0247	2-5
9002-0397	7-4
9002-0489	13-4, 9-9
9002-0494	8-2
9002-1095	3-4
9002-1101	3-4
9002-1113	3-4
9002-1117	3-4
9002-1203	3-4
9002-1455	3-4
9002-1456	3-4
9002-1469	3-3
9002-1470	3-3
9002-1552	13-4, 13-7, 7-2, 9-9
9002-1553	8-2, 8-3
9002-1557	13-4, 7-1, 9-9
9002-1558	8-2, 8-3
9002-1561	3-2
9002-1584	7-3
9002-1608	3-2, 3-3
9002-2042	9-11
9002-2043	13-7, 9-2, 9-5, 9-7, 9-9
9002-2045	9-1, 9-2
9002-2046	13-4
9002-2217	10-1, 10-2
9002-2218	3-4
9002-2224	3-4
9002-2225	3-4
9002-2230	10-6
9002-2232	10-1, 10-2, 10-3, 10-5
9002-2234	2-5
9002-2237	10-6
9002-2239	10-3, 10-5
9002-2240	10-1, 10-3, 10-4
9002-2247	10-6
9002-2249	10-5
9002-2250	10-1, 10-3, 10-4
9002-2257	10-6
9002-2259	10-5
9002-2260	10-1
9002-2277	10-6
9002-2279	10-5
9002-2280	10-1, 10-3, 10-4
9002-2295	10-2
9002-3042	9-7
9002-3116	9-11
9002-3117	10-6
9002-3128	10-1, 10-2, 10-5
9002-3145	10-6
9002-3153	10-2, 10-5
9002-3157	10-1, 10-3, 10-4
9002-3222	10-1
9002-3223	9-1
9002-3232	10-6
9002-3246	10-18
9002-3342	10-2, 10-5
9002-3349	10-1, 10-3, 10-4
9002-4232	10-6
9002-4342	10-2
9002-5342	10-5
9002-5349	10-1, 10-3, 10-4
9002-6019	3-4
9002-6155	10-9
9002-6400	9-8
9002-6491	3-1, 12-2
9002-6492	7-3
9002-6511	8-2
9002-6523	3-4
9002-6632	9-1
9002-6687	9-2
9002-6763	6-9
9002-6830	11-4
9002-6965	4-2
9002-7178	8-1
9002-7180	13-5, 4-5, 9-7, 9-9
9002-7184	9-8
9002-7187	11-4, 13-1, 13-7, 8-3, 9-9, 9-12
9002-7214	11-4, 13-2, 13-3, 2-2
9002-7264	3-4
9002-7266	9-1
9002-7267	6-3
9002-7315	13-2
9002-7316	11-4, 13-3
9002-7319	13-2, 2-2, 7-1
9002-7360	9-2, 9-10
9002-7372	9-3
9002-7462	10-12
9002-7469	5-1
9002-7470	2-5
9002-7471	3-4
9002-7472	2-5, 7-1
9002-7475	2-4
9002-7485	9-2
9002-7684	8-2
9002-7685	7-3
9002-7713	5-5, 9-4
9002-7720	6-1
9002-7736	10-16
9002-7769	8-1, 8-2, 8-3
9002-7908	7-3
9002-7913	9-4
9002-7961	10-1
9002-7970	8-1
9002-7987	13-4, 13-7, 7-2, 8-2, 8-3, 8-4, 9-9
9002-8217	9-8
9002-8225	9-1, 9-3
9002-8482	9-1, 9-2
9002-8492	5-3
9002-8496	5-3
9002-8499	9-4, 9-10
9002-8641	6-4
9002-8662	13-7, 7-2, 8-2, 8-3
9002-8664	6-1
9002-8674	5-2
9002-8682	5-5, 5-6
9002-8695	7-1
9002-8720	9-1
9002-8740	3-2, 3-3, 3-4
9002-8750	6-1
9002-8751	5-1
9002-8935	3-1, 9-6
9002-8941	3-3, 3-4
9002-8946	7-3
9002-8955	9-9
9002-8956	13-7
9002-8958	13-7
9002-8959	8-1
9002-8960	8-1
9002-8962	8-2
9002-8965	3-1, 3-2, 3-3, 3-4
9002-8966	9-10
9002-8968	13-7
9002-8971	8-2
9002-8974	8-2
9002-8975	8-2
9002-8976	8-2
9002-8977	7-3
9002-8978	13-7, 9-9
9002-8990	4-2

INDEX

PART NUMBER	PAGE
9002-9915	9-1, 9-10
9002-9930	9-3
9002-9935	9-11
9002-9938	13-4, 13-7, 9-9
9002-9939	9-7
9002-9976	3-4
9003-0029	6-10
9003-0045	6-10
9004-1002	2-4
9004-1003	9-2
9015-3001	4-6
9020-0003	4-1
9020-0007	3-4
9020-0170	11-1, 11-4
9020-0171	11-4, 13-3
9020-0192	11-1, 8-1
9020-0253	2-5, 3-2, 3-3, 3-4
9020-0266	7-4
9020-0289	7-3
9020-0290	13-4, 13-7, 7-1, 7-2, 8-2, 8-3, 9-9
9020-0299	13-4, 7-1, 9-9
9020-0308	5-4
9020-0313	13-5, 4-5, 9-7, 9-9
9020-0339	6-14
9020-0342	5-3
9020-0347	11-4
9020-0349	11-1, 11-4, 13-2, 8-1
9020-0351	11-1, 9-9
9020-0352	11-4, 13-3
9020-0353	11-1
9020-0406	7-1, 7-2, 8-2
9020-0434	11-1
9020-0437	8-1
9020-0445	3-1, 12-2
9020-0481	9-1
9020-0482	9-6
9020-0483	9-5
9020-0506	11-1
9020-0557	5-3
9020-0559	13-4, 7-1, 7-3, 8-2, 8-3, 9-9
9020-0561	6-14
9020-0586	11-4
9020-0602	4-2, 4-8
9020-0615	11-4
9020-0616	11-2, 11-3, 8-2
9020-0638	7-2
9020-0679	11-4, 2-3
9020-0680	11-4, 2-2
9020-0685	11-4, 13-3
9020-0688	12-2, 13-4, 7-1, 9-9, 3-1
9020-0755	13-2, 2-1, 2-2
9020-0772	6-14
9020-0774	13-7, 7-1
9020-0795	7-3
9020-0807	5-6
9020-0811	11-2, 11-3
9020-0914	11-4
9020-0952	11-4
9020-1058	6-10
9020-1346	7-4
9020-1347	7-4
9020-1348	7-4
9020-1349	7-4
9020-1350	7-4
9020-1414	5-6
9020-1439	6-14
9020-1441	6-14
9020-1443	4-5
9020-1452	6-14
9020-1463	8-2, 8-3
9020-1553	10-3, 10-5
9020-1562	8-2, 8-3
9020-1608	3-4
9020-1615	6-14
9020-1762	6-14
9020-1766	6-14
9020-1805	6-13
9020-1831	8-4
9020-1833	6-13
9020-1834	6-13
9020-1836	6-13
9020-1837	6-13
9020-1838	6-13
9020-1839	6-13
9020-1840	6-13
9020-1842	6-13
9020-1846	6-13
9020-1848	6-13
9020-1849	6-13
9020-1853	6-13, 6-14
9020-1854	6-13
9020-1902	2-5
9020-1918	13-8, 2-5
9020-1927	8-7
9020-2141	6-14
9020-2230	7-4
9020-2303	11-4, 13-3, 6-1, 8-2
9020-2327	9-3
9020-2343	9-3
9020-2361	13-4, 13-7, 7-2, 9-9
9020-2371	10-14, 10-16
9020-2372	10-14, 10-16
9020-2376	10-14, 10-16
9020-2377	10-16
9020-2378	10-16
9020-2379	10-14, 10-16
9020-2381	10-16
9020-2382	10-16
9020-2383	10-14
9020-2389	10-16
9020-2390	10-16
9020-2391	10-16
9020-2392	10-16
9020-2393	10-16
9020-2396	10-14
9020-2398	10-14
9020-2402	10-14
9020-2403	10-14
9020-2404	10-14
9020-2405	10-14
9020-2406	10-14
9020-2407	10-14
9020-2415	10-14
9020-2416	10-14
9020-2417	10-14
9020-2419	10-14
9020-2435	10-14, 10-16
9020-2500	6-15
9020-2501	6-15
9020-2502	6-15
9020-2503	6-15
9020-2504	6-15
9020-2505	6-15
9020-2506	6-15
9020-2507	6-15
9020-2508	6-15
9020-2509	6-15
9020-2511	6-15
9020-2513	6-15
9020-2515	6-15
9020-2517	6-15
9020-2519	6-15
9020-2521	6-15
9020-2522	6-15
9020-2523	6-15
9020-2524	6-15
9020-2525	6-15
9020-2526	6-15
9020-2527	6-15
9020-2528	6-15
9020-2531	6-15

INDEX

PART NUMBER	PAGE
9020-2532	6-15
9020-2533	6-15
9020-2534	6-15
9020-2536	6-15
9020-2537	6-15
9020-2542	6-15
9020-2543	6-15
9020-2544	6-15
9020-2545	6-15
9020-2546	6-15
9020-2547	6-15
9020-2548	6-15
9020-2551	10-6
9020-2875	9-5
9020-2886	11-2, 11-3
9020-2926	8-1, 9-4
9020-3039	2-5, 3-2, 3-3, 3-4
9020-3040	2-5, 3-2, 3-3, 3-4
9020-3139	2-5
9020-3167	3-4
9020-3168	2-5, 3-1
9020-3190	8-7
9020-3191	8-7
9020-3192	8-7
9020-3193	8-7
9020-3288	3-2, 3-3, 3-4
9020-3341	8-8
9020-3374	6-1
9020-3376	11-4, 13-2
9020-3421	9-8
9020-3437	10-13
9020-3438	10-13
9020-3439	10-13
9020-3440	10-13
9020-3502	7-1, 7-2, 8-2
9020-3506	9-3
9020-3627	2-2
9020-3628	11-4
9020-3840	2-2
9020-3845	6-13
9020-3877	6-12
9020-3891	6-13
9020-3894	8-6
9020-3897	8-6
9020-3899	8-6
9020-3900	8-6
9020-3901	8-6
9020-3902	8-6
9020-3903	8-6
9020-3904	8-6
9020-3905	8-6
9020-3906	8-6
9020-3907	8-6
9020-3908	8-6
9020-3909	8-6
9020-3910	8-6
9020-3911	8-6
9020-3912	8-6
9020-3913	8-6
9020-3914	8-6
9020-3915	8-6
9020-3916	8-6
9020-3917	8-6
9020-3918	8-6
9020-3919	8-6
9020-3920	8-6
9020-3923	11-1
9020-3959	2-1
9020-4009	11-4
9020-4244	4-5, 4-6, 9-9
9020-4245	4-5, 9-9, 9-11
9020-4730	6-4
9020-4731	6-4
9020-4732	5-1, 6-1, 6-4
9020-4733	6-4
9020-4734	6-4
9020-4735	6-4
9020-4737	6-4
9020-4738	6-4
9020-4740	6-4
9020-4741	6-4
9020-4748	6-4
9020-4749	6-4
9020-4755	6-2
9020-4756	6-2
9020-4767	6-2
9020-4779	6-2
9020-4782	6-2
9020-4784	6-2
9020-4787	6-4
9020-4788	6-4
9020-4790	6-4
9020-4793	6-4
9020-4798	6-3
9020-4799	6-3
9020-4800	6-3
9020-4802	6-3
9020-4804	6-3
9020-4806	6-3
9020-4807	6-3
9020-4809	6-3
9020-4817	6-3
9020-4820	6-8
9020-4822	6-8
9020-4823	6-3
9020-4824	6-3
9020-4829	6-6
9020-4831	6-6
9020-4842	6-6
9020-4851	6-6
9020-4862	6-6
9020-4864	6-6
9020-4866	6-6
9020-4874	6-5
9020-4935	6-7
9020-4938	6-7
9020-4939	6-7
9020-4944	6-7
9020-4955	6-9
9020-4957	6-9
9020-4959	6-9
9020-4960	6-9
9020-4962	6-9
9020-4964	6-9
9020-4966	6-9
9020-4968	6-9
9020-4971	6-9
9020-4973	11-2, 11-3
9020-4980	6-9
9020-4981	6-9
9020-4982	6-9
9020-4983	6-9
9020-4984	6-9
9020-4986	6-9
9020-4988	6-9
9020-4990	6-8
9020-4991	6-8
9020-4992	6-8
9020-5002	6-1
9020-5031	5-1
9020-5032	5-1
9020-5047	6-4
9020-5056	6-8
9020-5057	6-8
9020-5058	6-9
9020-5121	9-4, 9-11
9020-5166	6-1
9020-5194	5-3
9020-5195	5-3
9020-5198	7-1
9020-5205	11-2, 11-3
9020-5222	9-1
9020-5223	5-2

INDEX

PART NUMBER	PAGE
9020-5237	9-5, 9-6
9020-5298	3-1
9020-5340	2-5
9020-5407	3-3, 3-4
9020-5414	10-1, 10-3, 10-4, 10-5
9020-5450	10-6
9020-5462	2-5
9020-5465	2-5
9020-5475	3-3, 3-4
9020-5482	2-5, 3-1
9020-5489	2-4
9020-5497	3-1, 3-2, 3-3, 3-4
9020-5533	13-4, 13-7, 7-2, 9-9
9020-5534	7-2
9020-5541	7-1
9020-5542	7-1
9020-5546	9-9
9020-5558	7-2
9020-5571	7-1
9020-5580	7-2
9020-5585	5-4, 9-2, 9-4
9020-5653	2-5
9020-5654	5-1
9020-5661	11-1, 11-4
9020-5663	5-5, 5-6
9020-5667	5-5
9020-5685	11-1
9020-5686	11-1
9020-5687	11-1
9020-5688	11-1, 11-2, 11-3, 11-4
9020-5690	11-1
9020-5716	10-16
9020-5730	2-1
9020-5731	2-3
9020-5746	2-1
9020-5759	7-2
9020-5765	7-2
9020-5767	5-4
9020-5773	9-5, 9-7
9020-5776	9-1
9020-5783	9-2
9020-5792	9-2, 9-6
9020-5793	9-1, 9-2
9020-5799	9-4
9020-5824	9-6
9020-5825	9-6
9020-5846	2-2
9020-5861	5-1
9020-5866	5-1
9020-5870	3-1, 3-2, 3-3, 3-4
9020-5886	2-2
9020-5888	2-2
9020-5891	2-4
9020-5912	11-4
9020-5918	5-3
9020-5927	11-1
9020-5971	5-1, 7-3
9020-5973	7-1
9020-5981	13-4, 9-9
9020-5983	13-4, 7-1, 9-9
9020-6003	9-4
9020-6005	7-1
9020-6017	2-2
9020-6018	13-2, 2-2
9020-6019	13-2, 2-2
9020-6023	11-4, 13-2, 2-2
9020-6024	11-4, 13-2
9020-6025	13-2, 2-2
9020-6029	8-4
9020-6042	10-1, 10-2, 10-3, 10-5
9020-6045	13-4, 7-1, 9-9
9020-6046	3-2, 3-3, 3-4, 4-2
9020-6079	11-2, 11-4
9020-6100	2-2
9020-6105	5-3
9020-6124	11-2, 11-3
9020-6128	7-1, 9-9
9020-6129	11-4
9020-6130	11-4
9020-6131	11-4, 2-3
9020-6132	13-3
9020-6133	11-4, 13-3, 2-3
9020-6134	11-4, 2-3
9020-6140	12-1
9020-6192	13-1
9020-6194	2-1
9020-6196	2-1
9020-6200	2-1, 9-8
9020-6203	2-1
9020-6222	7-1, 9-9
9020-6238	3-1, 3-4
9020-6260	5-1
9020-6262	5-1, 5-6, 6-1
9020-6263	5-1
9020-6310	11-4
9020-6312	13-2
9020-6316	5-4
9020-6325	11-2
9020-6347	9-9
9020-6358	11-4
9020-6260	5-1
9020-6374	13-2
9020-6375	2-5
9020-6376	6-4
9020-6377	6-4
9020-6378	6-2
9020-6379	6-2
9020-6382	6-4
9020-6384	6-4
9020-6385	6-2
9020-6386	6-2
9020-6387	6-2
9020-6394	6-6
9020-6395	6-6
9020-6396	6-6
9020-6403	6-7
9020-6413	10-7
9020-6415	10-7
9020-6417	10-7
9020-6418	10-7
9020-6419	10-7
9020-6420	10-7
9020-6421	10-7
9020-6422	10-7, 10-9
9020-6423	10-7, 10-9
9020-6427	10-7
9020-6428	10-7
9020-6429	10-7
9020-6430	10-7
9020-6431	10-7
9020-6542	2-5
9020-6543	6-10
9020-6544	6-10
9020-6545	6-10
9020-6546	6-10
9020-6548	10-8
9020-6549	10-8
9020-6550	10-8
9020-6552	10-8
9020-6553	10-8
9020-6554	10-8
9020-6555	10-8
9020-6556	10-8
9020-6557	10-8
9020-6558	10-8
9020-6559	10-8
9020-6560	10-8
9020-6561	10-8
9020-6562	10-8
9020-6564	10-8
9020-6567	7-4
9020-6606	5-6
9020-6613	2-2

INDEX

PART NUMBER	PAGE
9020-6634	5-1
9020-6737	10-9, 9-2
9020-6738	10-10, 9-3
9020-6739	10-11, 11-2, 11-3, 9-1, 9-3, 9-10
9020-6746	6-15
9020-6748	10-16, 9-1, 9-3
9020-6750	9-3
9020-6752	9-10
9020-6761	6-15
9020-6762	7-4, 9-4, 9-10
9020-6769	9-10
9020-6793	10-3
9020-6794	10-2
9020-6795	10-2
9020-6796	10-2
9020-6798	10-2
9020-6799	10-2
9020-6846	2-5
9020-6847	2-4
9020-6859	7-1
9020-6861	7-1, 7-2
9020-6873	3-1
9020-6886	3-2, 3-3, 3-4
9020-6887	3-2, 3-3
9020-6888	13-5, 4-5, 9-7, 9-9
9020-6892	3-1, 3-2, 3-3, 3-4, 9-5, 9-7
9020-6895	2-5
9020-6896	2-5
9020-6897	2-5
9020-6900	2-5
9020-6901	3-2
9020-6906	3-2
9020-6976	3-2, 3-3, 3-4
9020-6978	10-1
9020-6979	10-1
9020-6980	3-2
9020-6983	3-2
9020-7027	3-1, 3-4
9020-7029	3-1, 3-4
9020-7030	3-1, 3-2, 3-3
9020-7041	13-5, 4-5, 9-7, 9-9
9020-7042	3-3, 3-4
9020-7043	3-2, 3-3, 3-4
9020-7046	3-2, 3-3, 3-4
9020-7212	6-12
9020-7215	3-2, 3-4
9020-7219	6-1
9020-7221	3-4
9020-7225	11-3
9020-7243	9-9
9020-7249	5-1
9020-7250	5-1
9020-7251	5-1
9020-7256	6-1
9020-7257	6-1
9020-7258	6-1
9020-7278	2-1
9020-7284	5-1
9020-7290	9-3
9020-7291	5-1
9020-7295	9-3
9020-7296	9-3
9020-7297	9-3
9020-7298	9-3
9020-7299	9-2
9020-7301	9-4
9020-7302	3-2, 3-4
9020-7314	10-12, 9-2
9020-7329	9-1
9020-7330	9-1
9020-7352	9-6
9020-7353	9-10
9020-7356	8-4
9020-7360	9-2, 9-14
9020-7362	9-2
9020-7363	9-1, 9-2
9020-7365	9-1
9020-7368	9-4
9020-7369	9-4
9020-7370	9-3
9020-7371	9-3
9020-7373	9-3
9020-7375	9-3
9020-7376	9-3
9020-7377	9-3
9020-7378	9-5
9020-7379	9-5
9020-7380	9-5
9020-7381	9-5
9020-7382	9-5
9020-7383	9-5
9020-7386	9-7
9020-7387	9-7
9020-7389	9-8
9020-7390	9-8
9020-7391	9-8
9020-7392	9-8
9020-7393	13-4, 13-7, 9-9
9020-7398	9-10
9020-7407	9-10
9020-7408	9-10
9020-7410	9-4
9020-7411	9-2, 9-10, 9-13
9020-7412	6-14
9020-7413	6-14
9020-7414	6-14
9020-7415	6-14
9020-7416	6-14
9020-7419	2-5
9020-7422	5-2
9020-7458	2-1
9020-7463	9-7
9020-7464	9-9
9020-7469	5-5
9020-7470	9-9
9020-7482	11-2, 11-3
9020-7484	2-5
9020-7485	2-5
9020-7488	12-1
9020-7491	9-1
9020-7497	11-2, 11-3, 5-1
9020-7512	2-1
9020-7524	11-2, 11-3
9020-7527	3-2
9020-7532	3-1
9020-7533	10-3, 10-4
9020-7534	10-3, 10-4
9020-7535	10-3, 10-4
9020-7536	10-3, 10-4
9020-7538	10-3, 10-4
9020-7539	10-3, 10-4
9020-7540	10-4
9020-7541	10-3, 10-4
9020-7542	10-3, 10-4
9020-7543	10-3, 10-4
9020-7544	10-3, 10-4
9020-7567	9-2, 9-3
9020-7575	3-1, 9-6
9020-7583	9-9
9020-7599	9-1
9020-7615	10-14, 9-1
9020-7621	3-2, 3-3, 3-4
9020-7622	5-3
9020-7630	11-3
9020-7633	9-9
9020-7634	9-9
9020-7645	9-9
9020-7646	11-1
9020-7661	9-9
9020-7664	9-10
9020-7665	9-3

INDEX

PART NUMBER	PAGE
9020-7666	9-10
9020-7667	9-3
9020-7686	9-1
9020-7687	9-1
9020-7688	9-1, 9-10
9020-7689	9-1, 9-2
9020-7690	9-2
9020-7691	9-1
9020-7692	9-1
9020-7693	9-10
9020-7694	9-1, 9-10
9020-7695	9-2
9020-7696	9-2
9020-7697	9-2
9020-7707	7-1
9020-7710	3-2, 3-3, 3-4
9020-7712	9-1
9020-7713	9-10
9020-7716	9-9
9020-7717	11-2, 11-3
9020-7719	11-2, 11-3
9020-7742	8-2
9020-7743	8-2
9020-7745	8-2
9020-7750	8-2
9020-7752	8-2
9020-7753	8-2
9020-7755	11-2, 9-2, 9-10
9020-7756	9-10
9020-7765	9-1
9020-7766	8-2
9020-7767	8-2
9020-7768	8-2
9020-7769	8-2
9020-7773	11-2, 11-3
9020-7790	4-2
9020-7800	7-3
9020-7801	7-3, 8-3
9020-7803	7-3
9020-7805	8-2
9020-7816	8-1
9020-7818	5-1
9020-7821	10-6
9020-7822	10-6
9020-7823	11-2, 8-1
9020-7833	8-2
9020-7834	8-1
9020-7835	8-2, 8-3
9020-7836	8-1
9020-7837	8-1
9020-7838	8-1
9020-7839	8-1
9020-7842	2-5, 9-13
9020-7851	8-1
9020-7852	8-1
9020-7853	8-1
9020-7854	8-1
9020-7855	8-1
9020-7856	8-1
9020-7857	11-1, 8-1
9020-7863	5-5
9020-7866	11-1
9020-7869	5-5
9020-7878	4-2, 4-3, 9-11
9020-7879	10-17, 4-2, 9-11
9020-7880	9-11
9020-7881	4-2
9020-7882	4-2, 4-5
9020-7883	9-7
9020-7884	4-2
9020-7887	8-2, 8-3
9020-7888	8-2, 8-3
9020-7894	3-2, 3-3, 3-4
9020-7898	10-5
9020-7900	10-5
9020-7902	3-2, 3-3, 3-4
9020-7905	8-4
9020-7906	9-1
9020-7907	6-11
9020-7908	6-11
9020-7909	6-11
9020-7910	6-12
9020-7911	6-12
9020-7913	6-12
9020-7914	6-12
9020-7915	6-12
9020-7916	6-12
9020-7917	6-12
9020-7918	6-12
9020-7919	6-12
9020-7920	6-12
9020-7921	6-12
9020-7922	6-12
9020-7923	6-12
9020-7924	6-12
9020-7925	6-12
9020-7926	6-12
9020-7927	6-12
9020-7932	6-12
9020-7935	6-12
9020-7936	6-12
9020-7937	6-12
9020-7938	6-12
9020-7939	6-12
9020-7940	6-13
9020-7941	6-13
9020-7942	6-13
9020-7943	6-13
9020-7944	6-13
9020-7945	8-6
9020-7946	8-6
9020-7947	8-6
9020-7950	8-6
9020-7951	8-6
9020-7952	8-6
9020-7953	10-1
9020-7954	10-3, 10-4
9020-7956	10-1
9020-7957	10-1
9020-7958	10-1
9020-7959	10-1
9020-7960	10-1
9020-7962	10-1
9020-7963	10-1
9020-7964	10-1
9020-7965	10-1
9020-7966	10-1
9020-7967	10-1
9020-7968	10-1
9020-7969	10-1
9020-7970	10-1
9020-7986	10-2
9020-8017	6-15
9020-8018	6-15
9020-8020	6-15
9020-8021	6-15
9020-8023	10-2
9020-8026	10-14
9020-8030	10-14
9020-8038	10-14
9020-8039	10-15
9020-8040	10-12
9020-8041	10-12
9020-8042	10-12
9020-8043	10-12
9020-8044	10-12
9020-8045	10-12
9020-8046	10-12
9020-8047	10-12
9020-8048	10-12
9020-8049	10-12
9020-8050	10-12
9020-8051	10-12

INDEX

PART NUMBER	PAGE
9020-8052	10-12
9020-8053	10-12
9020-8054	10-12
9020-8055	10-12
9020-8056	10-12
9020-8057	10-12
9020-8058	10-10
9020-8059	10-10
9020-8060	10-10
9020-8061	10-10
9020-8062	10-10
9020-8063	10-10
9020-8064	10-10
9020-8065	10-10
9020-8066	10-11
9020-8067	10-11
9020-8071	10-11
9020-8072	10-11
9020-8074	8-5
9020-8075	8-5
9020-8090	8-5
9020-8091	8-5
9020-8094	8-5
9020-8095	8-5
9020-8096	8-5
9020-8097	8-5
9020-8099	8-5
9020-8114	8-5
9020-8119	8-5
9020-8120	8-5
9020-8132	8-5
9020-8133	6-12, 8-4
9020-8134	6-12, 8-4
9020-8136	10-7
9020-8137	10-9
9020-8139	10-9
9020-8140	10-9
9020-8141	10-9
9020-8142	4-3
9020-8143	4-3
9020-8144	4-3
9020-8145	4-3
9020-8146	4-3
9020-8147	4-3
9020-8148	10-9, 4-3
9020-8149	4-3
9020-8150	4-3
9020-8151	4-3
9020-8152	4-3
9020-8153	4-3
9020-8154	4-3
9020-8155	4-3
9020-8156	4-3
9020-8157	4-3
9020-8158	4-3
9020-8159	4-3
9020-8160	4-3
9020-8161	4-3
9020-8162	4-3
9020-8163	4-3
9020-8164	4-3
9020-8165	4-3
9020-8166	4-3
9020-8167	4-3
9020-8168	4-3
9020-8169	4-3
9020-8170	4-3
9020-8171	4-3
9020-8172	4-3
9020-8173	4-3
9020-8174	4-3
9020-8175	4-3
9020-8176	4-3
9020-8177	4-3
9020-8178	4-3
9020-8179	4-3
9020-8180	4-3
9020-8181	4-3
9020-8182	4-3
9020-8183	4-3
9020-8184	4-3
9020-8185	4-3
9020-8186	4-3
9020-8187	4-3
9020-8188	4-3
9020-8189	4-3
9020-8190	4-3
9020-8193	10-16
9020-8194	10-16
9020-8196	10-16
9020-8197	10-16
9020-8198	10-16
9020-8200	10-18
9020-8201	10-18
9020-8202	10-18
9020-8203	10-17
9020-8204	10-17
9020-8205	10-17
9020-8206	10-17
9020-8207	10-17
9020-8208	10-17
9020-8209	10-17
9020-8210	10-17
9020-8211	10-17
9020-8212	10-17
9020-8213	8-2
9020-8214	8-2
9020-8215	9-5
9020-9540	10-3
9021-0079	6-12
9021-0080	6-12
9021-0081	6-12
9040–3184	2-5
9040-0061	10-5
9040-0062	10-3, 10-5
9040-0066	9-8
9040-0074	10-1
9040-0393	10-1
9040-0527	8-1
9040-0543	7-2
9040-0654	11-2, 11-3, 5-2
9040-0670	11-4
9040-0706	11-4, 13-3
9040-0835	8-1, 8-8
9040-1203	6-11
9040-1204	6-11
9040-1228	8-6
9040-1232	6-11
9040-1237	8-6
9040-1254	6-13
9040-1255	6-13
9040-1256	6-13
9040-1257	6-13
9040-1258	6-13
9040-1259	6-13
9040-1288	6-12
9040-1294	6-12
9040-1326	6-12
9040-1459	8-7
9040-1460	8-7
9040-1461	8-7
9040-1462	8-7
9040-1463	8-7
9040-1464	8-7
9040-1465	8-7
9040-1466	8-7
9040-1570	8-4, 8-7
9040-2098	10-6
9040-2099	10-6
9040-2122	10-3
9040-2123	10-3
9040-2427	11-2, 11-3
9040-2477	4-1

INDEX

PART NUMBER	PAGE
9040-2478	4-1
9040-2642	6-1
9040-2801	3-1, 3-4
9040-2827	5-2
9040-2850	2-4
9040-2875	9-5
9040-2876	9-8
9040-2903	7-1
9040-2904	13-4, 7-1, 9-9
9040-2948	4-2
9040-3032	2-2
9040-3033	2-2
9040-3034	2-2
9040-3035	13-2, 2-2
9040-3036	2-2
9040-3050	3-3
9040-3056	4-2
9040-3076	11-4
9040-3079	5-1
9040-3082	2-2
9040-3109	13-2
9040-3110	5-4
9040-3130	11-1
9040-3174	5-1
9040-3175	5-1
9040-3178	11-1, 7-1
9040-3182	3-3, 3-4
9040-3184	2-5
9040-3196	2-5
9040-3203	3-2, 3-3, 3-4
9040-3212	3-1, 9-6
9040-3232	3-2
9040-3249	13-5, 4-5, 9-7, 9-9
9040-3280	3-1
9040-3305	10-15, 5-1, 9-10
9040-3349	6-1
9040-3350	3-2, 3-4
9040-3352	2-1
9040-3360	9-9
9040-3371	8-2, 8-3
9040-3384	3-2, 3-3, 3-4
9040-3396	13-7, 9-9
9040-3406	7-1
9040-3415	8-2
9040-3419	9-1
9040-3420	11-1
9040-3424	7-3
9040-3431	5-1
9040-3437	4-2
9040-3441	3-2, 3-3, 3-4
9041-0229	2-2
9041-0247	6-12, 8-4
9041-0283	8-4
9041-0287	2-5
9041-0294	9-1
9041-0295	9-1
9041-0297	9-10
9041-0298	9-1, 9-10
9045-1039	4-6
9045-3002	4-1
9045-3006	4-6
9045-3007	4-6
9045-5035	4-6
9045-5037	4-6
9045-5039	4-6
9045-5040	4-6
9045-5041	4-6
9045-5042	4-6
9045-6002	4-6
9060-0097	6-1
9060-0267	7-4
9060-0273	7-4
9060-0274	7-4
9060-0390	4-1
9060-0654	5-2
9060-0727	9-8
9060-1364	9-4
9060-1818	4-1
9060-1819	4-1
9060-1917	5-3
9060-1946	6-1
9060-1947	6-1
9060-2040	6-14
9060-2566	9-10
9060-2638	6-14
9060-2706	10-13, 4-2
9060-2748	11-4
9060-2780	6-14
9060-2789	7-1
9060-2804	10-2
9060-2805	10-2
9060-2826	2-5
9060-2830	3-3, 3-4
9060-2838	3-2, 3-3, 3-4
9060-2842	3-1
9060-2845	3-4
9060-2852	3-3, 3-4
9060-2870	6-14
9060-2885	2-1
9060-2886	2-1
9060-2887	2-1
9060-2888	2-1
9060-2893	11-1
9060-2895	9-2, 9-10
9060-2897	8-2
9060-2904	4-2
9060-2905	4-2
9060-2906	3-2, 3-3, 3-4
9061-0038	6-12, 8-4
9061-0039	6-12, 8-4
9080-1180	10-1
9080-1199	5-2
9080-1213	7-1
9080-1238	2-2
9080-1270	10-5, 9-8
9080-1286	6-10
9080-1291	10-3
9080-1292	10-3
9080-1293	10-2, 9-6
9080-1296	3-4
9080-1303	2-4
9080-1306	2-5
9080-1311	2-5
9080-1312	2-5
9080-1313	10-6, 9-4
9080-1314	4-1
9080-1315	4-1
9080-1327	10-3, 10-4, 9-7
9080-1328	10-3, 10-4, 9-7
9080-1332	4-1
9080-1333	10-1, 9-5
9080-1336	11-2
9080-1338	2-1
9080-1339	2-1
9080-1349	3-2, 3-3, 3-4
9080-1353	4-2
9080-1356	10-3
9080-1357	10-3
9080-2132	4-1
9080-2164	4-1
9080-2221	4-1
9100-1002	5-1
9100-3002	12-1
9100-3006	12-2
9100-3014	12-2
9100-3016	12-2
9100-3018	12-2
9100-3020	12-2
9100-3025	12-2
9100-3027	12-2
9100-3029	12-1
9100-3030	12-1
9100-3031	12-2

INDEX

PART NUMBER	PAGE
9100-3032	12-1
9100-3036	12-1
9100-3039	12-1
9100-3040	12-1
9100-3041	12-1
9100-3044	12-1
9100-3050	12-1
9100-3051	12-1
9100-3052	12-1
9100-3186	5-2
9100-6016	5-3
9100-6017	5-3
9102-1009	4-5
9102-3006	12-1, 9-12
9103-0003	2-5
9103-0004	2-5
9103-1003	8-4
9103-1007	4-5
9103-1009	2-5
9103-1013	7-1
9103-1041	5-1
9103-1042	5-5
9103-1045	5-1
9103-1067	2-1
9103-1069	9-9
9103-1074	2-1
9103-1075	2-1
9103-1076	2-1
9103-1079	9-1
9103-1084	8-3
9103-1085	8-3
9103-1086	9-10
9103-1087	7-3
9103-1088	7-3
9103-1092	3-1
9103-1096	2-4
9103-1102	11-1, 7-1
9103-1111	3-2, 3-3
9103-1136	3-2, 3-4, 4-4
9103-1140	4-4
9103-1141	4-4
9103-1152	5-1
9103-1154	5-5
9103-1186	9-9
9103-1189	13-4
9103-1194	6-10
9103-1197	11-3
9103-1198	11-3
9103-1232	8-3
9103-1233	3-2, 3-3
9103-1235	3-2, 3-3
9103-1236	3-2, 3-3
9103-1237	3-2, 3-3
9103-1243	2-4
9103-1260	2-1
9103-1261	2-1
9103-1272	9-7
9103-1277	4-7
9103-1278	4-7
9103-1340	2-5
9103-1344	2-5
9103-1345	2-5
9103-1363	2-1
9103-1369	2-5
9103-1373	3-2
9103-1374	2-5, 3-2
9103-1391	2-5
9103-1395	5-1
9103-1397	2-5
9103-1404	5-1
9103-1464	13-7
9103-1465	13-7
9103-3001	12-1
9103-3002	12-2
9103-3003	12-2
9103-3007	8-2
9103-3009	12-1
9103-3010	12-1
9103-3011	12-1
9103-3012	12-1
9103-3014	12-1
9103-3016	12-2
9103-3018	12-2
9103-3019	12-1
9103-3020	12-1
9103-3021	12-1
9103-3022	12-1
9103-3023	12-2
9103-3024	12-1
9103-3025	12-1
9103-3026	12-1
9103-3027	12-1
9103-3028	5-5, 5-6
9103-3029	2-1
9103-3032	8-1, 8-3, 9-1, 9-7, 9-10
9103-3033	8-1
9103-3037	7-3
9103-3038	3-4
9103-3039	3-2, 3-3, 3-4
9103-3040	10-9
9103-3041	11-2
9103-3042	11-3
9103-3043	9-8
9103-3044	12-1
9103-3048	5-3
9103-3049	9-1
9103-3050	9-10
9103-3051	9-10
9103-3053	5-1
9103-3054	5-2
9103-3055	5-5
9103-3056	5-5
9103-3058	5-5
9103-3059	5-5
9103-3060	5-5
9103-3061	5-3
9103-3062	5-3
9103-3063	5-3
9103-3069	9-1
9103-3073	9-10
9103-3074	5-1
9103-3075	9-10
9103-3077	2-1
9103-3079	11-3
9103-3082	9-10
9103-3086	11-3
9103-3089	12-1
9103-3090	12-1
9103-3092	9-6
9103-3094	12-1
9103-3095	6-15
9103-3096	8-3, 9-10, 9-13
9103-3097	10-19, 11-3, 9-2, 9-10
9103-3098	11-3, 8-3
9103-3100	9-10
9103-3102	2-1
9103-3104	6-14
9103-3110	11-1, 11-4
9103-3111	11-1
9103-3112	11-1
9103-3122	10-15, 9-10
9103-3123	9-5
9103-3124	9-5
9103-3125	9-1
9103-3126	6-10
9103-3127	4-4, 9-12
9103-3128	9-10, 9-14
9103-3130	9-10, 9-13
9103-3131	5-2
9103-3132	5-3
9103-3133	5-1
9103-3134	5-1
9103-3135	12-1

INDEX

PART NUMBER	PAGE
9103-3136	5-1
9103-3137	5-3
9103-3138	9-10, 9-12
9103-3139	11-2, 11-3, 5-1
9103-3140	9-12
9103-3141	9-12
9103-3142	9-12
9103-3144	10-23, 9-2, 9-12
9103-3156	5-1, 9-10
9103-3157	12-1
9103-3161	4-5
9103-3168	10-7, 9-1, 9-2, 9-5, 9-6, 9-8, 9-12
9103-3177	9-1
9103-3178	9-1, 9-10
9103-3179	5-1, 9-10
9103-3182	5-1
9103-3184	11-1, 3-2, 3-3
9103-3186	3-2, 3-3
9103-3187	3-2, 3-3
9103-3190	3-2, 3-3
9103-3196	4-5
9103-3198	9-12
9103-3199	9-12
9103-3200	9-12
9103-3201	4-4, 9-12
9103-3202	11-3, 8-3
9103-3203	8-3
9103-3214	2-1
9103-3216	12-2
9103-3218	12-2
9103-3224	5-2, 9-8
9103-3226	9-1
9103-3230	4-5
9103-3234	11-3, 5-1
9103-3235	11-2, 11-3
9103-3237	8-2, 8-3
9103-3239	13-7, 9-9
9103-3240	10-8, 5-4, 9-2, 9-4
9103-3242	12-1, 4-6
9103-3243	12-1, 4-6
9103-3244	12-1
9103-3245	8-1
9103-3246	5-1
9103-3247	11-1
9103-3248	5-1
9103-3249	12-1
9103-3250	4-7
9103-3251	4-7
9103-3252	4-7
9103-3253	8-4
9103-3254	5-3
9103-3256	5-1
9103-3257	9-1, 9-10
9103-3258	5-1
9103-3262	11-3
9103-3268	5-1
9103-3270	11-3, 5-2
9103-3275	8-1, 8-2, 8-3, 8-5
9103-3278	12-1
9103-3279	12-1
9103-3281	7-3
9103-3282	11-1, 6-1
9103-3283	11-3, 6-1
9103-3286	10-1, 9-5
9103-3287	10-3
9103-3288	10-4
9103-3290	10-2
9103-3291	10-6
9103-3296	10-7
9103-3307	10-21, 13-1, 8-1, 9-13
9103-3311	12-1
9103-3312	12-1
9103-3318	10-18
9103-3323	11-3, 5-1
9103-3329	5-1
9103-3362	12-1
9103-3378	10-22
9103-3381	5-1
9103-3387	13-7
9103-3391	13-7
9103-3392	12-2
9103-3393	12-2
9103-3394	13-7
9103-3417	13-7
9103-3425	13-7
9103-3444	13-8
9103-3445	13-8
9103-3464	2-2
9103-3465	2-2
9103-3467	6-14
9103-3468	6-14
9103-3469	6-14
9103-3477	9-1
9103-3499	13-9
9103-3531	9-1
9103-3532	9-1
9103-3533	9-1
9103-3534	9-1
9103-4005	5-1, 6-1
9103-4006	5-1, 6-1
9103-4007	10-18
9103-4008	10-18
9103-4009	10-18
9103-4010	10-18
9103-4011	10-19
9103-4012	10-19
9103-4013	10-19
9103-4014	10-19
9103-4015	10-19
9103-4016	10-19
9103-4017	10-19
9103-4018	8-3, 9-13, 9-10
9103-4019	10-15, 9-10
9103-4026	6-15
9103-4027	6-15
9103-4028	6-15
9103-4029	6-15
9103-4030	9-5, 9-6
9103-4033	2-2
9103-4034	5-1
9103-4035	5-1
9103-4036	5-1
9103-4037	5-1
9103-4038	5-1
9103-4039	5-1
9103-4040	10-3, 10-5
9103-4041	10-3, 10-5
9103-4042	10-3
9103-4043	10-3
9103-4044	10-3
9103-4045	10-3, 10-5
9103-4046	10-3, 10-5
9103-4047	10-3
9103-4048	10-3
9103-4049	10-3
9103-4050	10-3
9103-4051	10-3, 10-5
9103-4052	10-3, 10-5
9103-4053	10-3
9103-4054	10-3
9103-4055	10-3
9103-4057	11-2, 5-1
9103-4058	10-15
9103-4059	10-15
9103-4060	10-15
9103-4061	10-15
9103-4062	10-15
9103-4063	10-15
9103-4064	10-15
9103-4065	10-15
9103-4066	10-15
9103-4067	10-15

INDEX

PART NUMBER	PAGE
9103-4068	10-15
9103-4069	10-15
9103-4070	10-7
9103-4072	10-7
9103-4074	10-7
9103-4077	6-12
9103-4078	6-11
9103-4079	8-5
9103-4080	8-5
9103-4081	8-5
9103-4082	8-5
9103-4084	8-5
9103-4085	8-5
9103-4086	8-5
9103-4087	8-5
9103-4088	8-5
9103-4090	8-5
9103-4091	8-5
9103-4092	8-5
9103-4093	8-5
9103-4094	8-5
9103-4095	8-5
9103-4096	8-5
9103-4097	9-12
9103-4098	2-3
9103-4102	10-7
9103-4104	10-7
9103-4105	10-7
9103-4107	10-24
9103-4109	10-24
9103-4110	10-25
9103-4111	10-24, 10-25
9103-4112	10-24, 10-25
9103-4113	10-24, 10-25
9103-4114	10-24, 10-25
9103-4115	10-24, 10-25
9103-4116	10-24, 10-25
9103-4117	10-24, 10-25
9103-4118	10-24
9103-4119	10-24
9103-4120	10-24
9103-4121	10-24
9103-4122	6-15
9103-4124	10-23
9103-4125	10-23
9103-4126	10-23
9103-4127	10-23
9103-4128	10-23
9103-4129	10-23
9103-4130	10-23
9103-4131	10-23
9103-4132	10-23
9103-4133	10-23
9103-4134	10-23
9103-4135	10-23
9103-4136	10-1
9103-4137	10-1
9103-4138	10-1
9103-4139	10-1
9103-4140	10-1
9103-4141	10-6
9103-4142	10-6
9103-4143	10-6
9103-4144	10-6
9103-4145	10-6
9103-4146	10-3, 10-4
9103-4147	10-3
9103-4148	10-3
9103-4149	10-3, 10-4
9103-4150	10-3, 10-4
9103-4151	10-4
9103-4152	10-4
9103-4153	10-1
9103-4154	10-1
9103-4155	10-3, 10-4
9103-4156	10-6
9103-4157	10-6
9103-4158	6-15
9103-4159	10-7
9103-4160	5-3
9103-4218	10-2
9103-4219	10-2
9103-4220	10-2
9103-4221	10-2
9103-4222	10-2
9103-4223	10-2
9103-4224	5-2
9103-4236	10-7
9103-4237	10-7
9103-4246	6-3
9103-4272	10-25
9103-4273	10-25
9103-4276	10-26
9103-4309	6-11, 6-13
9103-4326	6-1
9103-4327	6-1
9103-4329	10-18
9103-4330	10-18
9103-4331	6-4
9103-4372	4-6
9103-4373	4-6
9103-4374	4-6
9103-4375	4-6
9103-4376	4-6
9103-4377	4-6
9103-4396	5-2
9103-4397	6-13
9103-5007	13-3
9103-5017	9-9
9103-5018	9-9
9103-5023	10-18, 9-1
9103-5052	10-18
9103-5067	4-5
9103-5070	8-2
9103-5082	9-9
9103-5087	9-9
9103-5090	10-23, 9-12
9103-5091	9-12
9103-5092	9-12
9103-5094	10-18
9103-5096	2-1
9103-5105	4-7
9103-5109	9-9
9103-5110	8-2
9103-5112	11-3, 6-1
9103-5122	2-5
9103-5128	2-5
9103-5133	13-5
9103-5141	5-1, 6-1
9103-5147	3-2
9103-5169	9-9
9103-5220	13-7
9103-5221	13-7
9103-5222	13-7
9103-5240	13-8
9103-5295	9-1
9103-5296	9-1
9103-5297	9-1
9103-6001	3-3
9103-6002	9-1
9103-6003	9-1
9103-6008	6-1
9103-6009	5-1
9103-6010	5-1
9103-6011	5-1
9103-6012	5-1
9103-6014	7-3
9103-6015	2-1
9103-6016	2-1
9103-6022	7-3
9103-6029	4-4
9103-6030	4-4
9103-6032	4-4

INDEX

PART NUMBER	PAGE
9103-6033	5-3
9103-6035	3-1
9103-6036	3-1
9103-6037	3-2, 3-3
9103-6038	2-1
9103-6041	4-4
9103-6042	7-1
9103-6043	2-5
9103-6047	5-2
9103-6051	5-3
9103-6072	5-1
9103-6073	5-1
9103-6079	2-1
9103-6099	5-1
9103-6107	13-7
9104-1091	3-4
9104-1196	8-3
9104-1197	8-3
9104-1227	13-6
9104-1236	7-2
9104-1258	8-1
9104-1365	3-2, 3-4
9104-1402	8-3
9104-1424	8-3
9104-1425	8-3
9104-1431	8-3
9104-1438	13-8
9104-1439	13-8
9104-1449	13-8
9104-1450	13-8
9104-1451	13-8
9104-1459	13-8
9104-1481	13-8
9104-1489	13-8
9104-1510	2-1
9104-1596	13-8
9104-1598	13-8
9104-1731	13-8
9104-1732	13-8
9104-1733	13-8
9104-3031	12-2
9104-3032	6-10
9104-3038	12-2
9104-3039	12-2
9104-3064	13-1
9104-3065	13-1, 9-12
9104-3069	9-5
9104-3071	6-11
9104-3072	8-1
9104-3077	9-13
9104-3080	6-14
9104-3081	6-14
9104-3086	8-3
9104-3090	10-22, 9-13
9104-3091	8-1
9104-3095	13-1, 9-5
9104-3096	13-1, 9-5
9104-3100	3-2, 9-9
9104-3101	13-5, 3-2, 4-5, 9-9
9104-3113	9-3
9104-3114	9-3
9104-3115	9-3
9104-3116	9-3
9104-3123	13-6
9104-3125	4-5
9104-3126	4-5, 4-6
9104-3129	12-1
9104-3131	9-13
9104-3132	12-2
9104-3133	12-2
9104-3134	12-2
9104-3135	12-2
9104-3136	12-2
9104-3137	12-2
9104-3138	12-2
9104-3139	10-5, 9-8
9104-3143	9-13
9104-3144	13-6
9104-3145	9-10
9104-3146	6-11, 6-13, 6-14
9104-3153	9-2
9104-3154	8-3
9104-3163	9-13
9104-3168	9-3
9104-3188	8-1
9104-3189	8-1
9104-3190	8-1
9104-3196	13-4, 13-7, 9-9
9104-3205	10-5
9104-3209	12-1
9104-3211	12-1
9104-3214	8-3
9104-3215	12-1
9104-3222	13-8
9104-3232	10-26, 9-5, 9-6
9104-3245	10-26, 9-5, 9-6
9104-3247	13-8
9104-3258	10-24, 4-4, 9-12
9104-3274	13-6
9104-3276	6-14
9104-3291	6-11
9104-3296	10-20
9104-3430	6-14
9104-3494	13-8
9104-4001	10-11
9104-4008	6-10
9104-4009	6-10
9104-4010	6-10
9104-4048	6-2
9104-4050	6-3
9104-4051	6-3
9104-4052	6-3
9104-4053	6-4
9104-4054	6-4
9104-4075	10-5
9104-4114	10-7
9104-4126	10-22
9104-4127	10-22
9104-4128	10-22
9104-4129	10-22
9104-4130	10-22
9104-4137	6-11
9104-4138	6-11
9104-4139	6-11
9104-4140	6-11
9104-4141	6-11
9104-4142	6-11
9104-4143	6-11
9104-4144	6-11, 6-12
9104-4145	6-12
9104-4146	6-12
9104-4147	6-12
9104-4148	6-12
9104-4149	6-12
9104-4150	6-12
9104-4151	6-12
9104-4152	6-12
9104-4153	6-12
9104-4154	6-12
9104-4155	6-12
9104-4156	6-12
9104-4157	6-12
9104-4158	6-12
9104-4159	6-12
9104-4160	6-12
9104-4161	6-12
9104-4162	6-12
9104-4163	6-12
9104-4164	6-12
9104-4165	6-11, 6-13
9104-4166	6-13
9104-4167	6-13
9104-4168	6-13

INDEX

PART NUMBER	PAGE
9104-4169	6-13
9104-4170	6-13
9104-4171	6-13
9104-4173	6-13
9104-4174	6-13
9104-4175	6-13
9104-4176	6-13
9104-4177	6-13
9104-4178	6-13
9104-4179	6-13
9104-4180	6-13
9104-4181	6-13
9104-4182	6-13
9104-4183	6-13
9104-4184	6-13
9104-4185	6-13
9104-4186	6-13
9104-4187	6-13
9104-4188	6-13
9104-4189	6-13
9104-4191	6-13
9104-4192	6-13
9104-4193	6-13
9104-4194	6-13
9104-4195	6-13
9104-4196	6-13
9104-4197	6-13
9104-4199	6-13
9104-4200	6-13
9104-4201	6-13
9104-4202	6-13
9104-4203	6-13
9104-4204	6-13
9104-4205	10-5
9104-4206	10-5
9104-4207	10-5
9104-4208	10-5
9104-4209	10-5
9104-4210	10-5
9104-4211	10-14
9104-4213	10-14
9104-4218	10-14
9104-4220	10-14
9104-4222	10-14, 10-16
9104-4271	10-5
9104-4272	10-5
9104-4273	10-5
9104-4274	10-2, 10-5
9104-4275	10-5
9104-4297	10-22
9104-4298	6-13
9104-4304	10-24
9104-4305	10-24
9104-4306	10-24
9104-4307	10-24
9104-4308	10-24
9104-4309	10-24
9104-4335	6-13
9104-4444	6-11
9104-4445	6-11
9104-4446	6-11
9104-4447	6-11
9104-4448	6-11, 6-12
9104-4449	6-12
9104-4450	6-12
9104-4451	6-12
9104-4452	6-12
9104-4453	6-13
9104-4458	6-13
9104-4459	6-13
9104-4460	6-13
9104-4461	6-13
9104-4475	13-6
9104-4538	10-20
9104-4539	10-20
9104-4540	10-20
9104-5006	3-4
9104-5022	13-4
9104-5027	2-1
9104-5034	13-6
9104-5095	3-4
9104-5129	13-8
9104-5152	13-8
9104-5173	13-1
9104-6020	3-4
9104-6027	3-4
9104-6047	13-1, 5-2
9104-6051	13-4, 13-7, 7-2
9104-6056	13-1
9104-6057	8-3
9104-6074	3-4
9104-6083	8-3
9104-6126	13-8
9105-3354	10-25, 9-8
9105-3380	9-14
9105-4003	9-14
9105-6106	5-2
9106-3047	12-1
9106-4016	10-1, 10-3, 10-4, 10-5
9106-4017	10-2, 10-5
9106-5036	2-5
9106-6020	7-2
9106-6021	7-2
9108-1415	13-8
9108-1522	13-8
9108-1523	13-8
9108-1693	13-8
9108-1695	13-8
9108-3385	6-14
9108-6073	3-4
9111-3003	13-6
9112-0003	13-8
9112-0004	13-8
9112-1091	13-8
9112-1239	13-8
9112-1240	13-8
9112-3027	13-8
9112-3028	13-8
9112-3029	13-8
9112-3030	13-8
9112-3031	13-8
9112-3037	12-2
9112-3038	12-2
9112-3042	12-2
9112-3043	12-2
9112-3044	12-2
9112-3045	12-2
9112-4096	13-9
9114-1424	13-8
9114-4006	13-9
9114-4038	13-9
9114-4040	13-9
9114-4041	13-9
9114-4042	13-9
9114-4125	13-9
9114-4128	13-9
9114-4267	13-9
9116-6063	13-8
9902-7472	2-5

FRAME SHROUDING AND TRIM

Starting Serial No. 0144687J
Revised 6-25-99

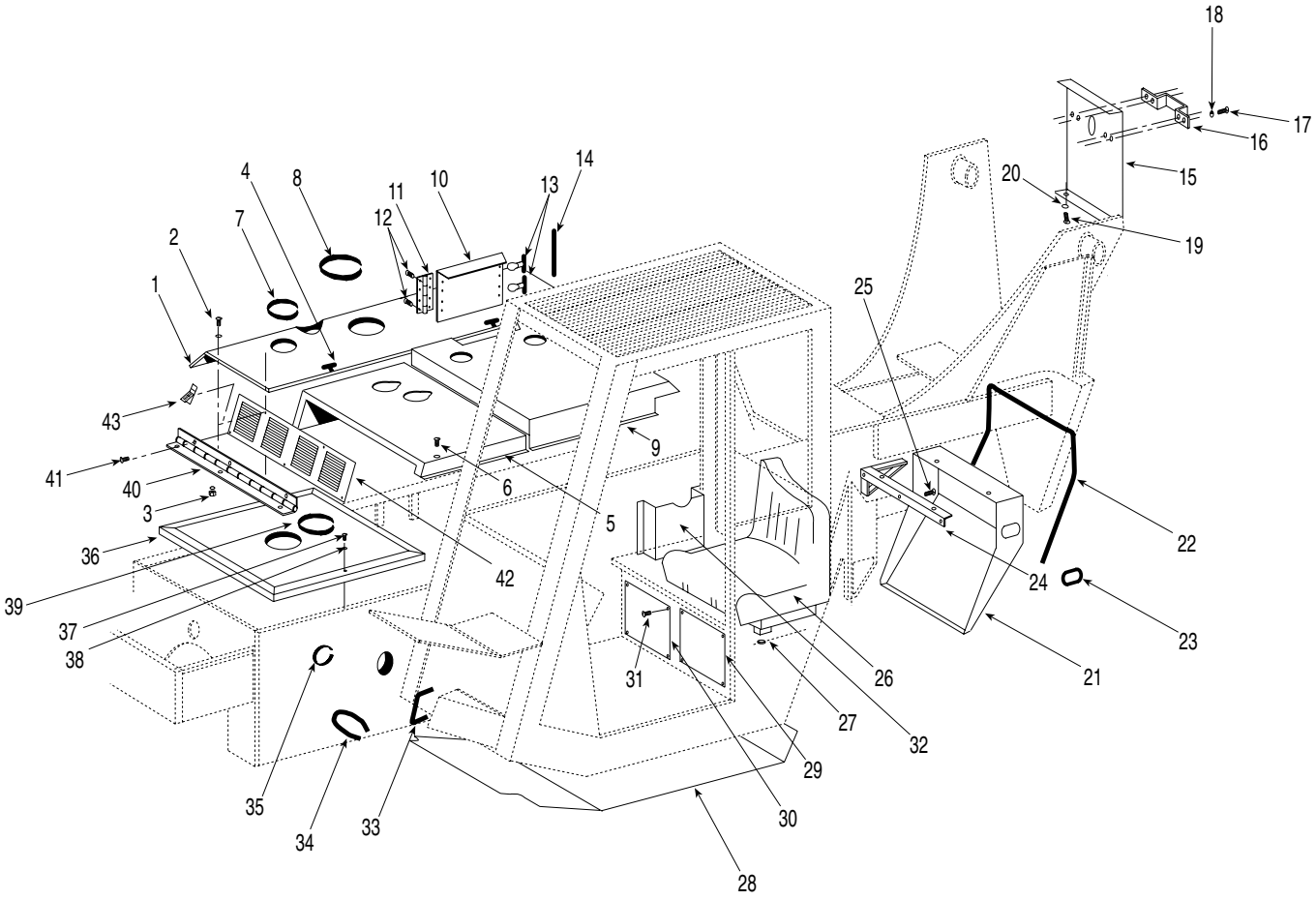

** Changed page number on second page of 2-1 from 2-1.1 to 2-1.*

Item	Part No.	Qty.	Description Of Part
1	9103-1260	1	TANK COVER
2	8820-1066	4	HEX HD CAPSCREW, 1/2-13X1-1/4, GR5
	8856-1111	4	FLAT WASHER, 1/2
3	8855-1013	4	LOCKWASHER, 1/2
	8852-1308	4	HEX LOCKNUT, 1/2-13
4	7716-3020	2	TANK COVER FASTENER
5	9103-6016	1	FRONT HOOD
6	8820-1003	8	HEX HD CAPSCREW, 1/4-20X3/4, GR5
	8855-1009	8	LOCKWASHER, 1/4
	8856-1107	8	FLATWASHER, 1/4
7	9020-6196	1	TRIM
8	9020-6196	1	TRIM
9	9104-5027	1	REAR HOOD
10	9103-1067	1	SERVICE DOOR
11	9103-3077	1	DOOR HINGE
12	8826-1009	8	BUTTON HD CAPSCREW, #10-24X5/8
	8856-1105	8	FLATWASHER, #10
	8852-1605	8	HEX HD LOCKNUT #10
13	9020-7458	2	DRAW LATCH
14	9020-6196	1	TRIM
15	9040-3352	1	REAR BOOM COVER
16	9104-1510	1	BOOM CABLE GUARD
17	8820-1067	6	HEX HD CAPSCREW, 1/2-13X1-1/2
18	8850-1013	6	LOCKWASHER, 1/2
	8856-1111	6	FLATWASHER, 1/2
19	8820-1033	2	HEX HD CAPSCREW, 3/8-16X3/4
20	8855-1011	2	LOCKWASHER, 3/8
	8856-1004	2	FLATWASHER, 3/8
21	9103-6079	1	REAR CAB COVER
22	9020-6194	1	TRIM
23	9020-6196	1	TRIM
24	9060-2885	1	REAR WINDOW BRACKET
25	8820-1005	3	HEX HD CAPSCREW, 1/4-20X1, GR5
26	9020-7278	1	SEAT
27	8667-1164	2	SPACER
	7714-3006	4	NUT
28	9103-1363	1	CAB BOTTOM COVER
29	9020-5746	1	HEATER COVER
	7714-3003	4	BOLT
	7714-3006	4	NUT
30	9020-5730	1	VALVE COVER
31	7714-3003	4	BOLT
	7710-3044	4	CLIP NUT
32	9103-3102	1	MANUAL HOLDER
33	9020-6196	1	TRIM
34	9020-6196	1	TRIM
35	9020-6200	1	TRIM
36	9103-5096	1	MAINTENANCE DECK
37	8820-1033	2	HEX HD CAPSCREW, 3/8-16X3/4, GR5
38	8856-1109	2	LOCKWASHER, 3/8
39	9020-6194	1	TRIM
40	9103-1075	1	HINGE
41	8832-1047	3	SELF-TAPPING SCREW, 1/4-20X3/8
42	9103-1261	1	FRONT SERVICE DOOR
43	9020-7458	2	DRAW LATCH

NOTE: ALL TRIM SOLD IN 25 FT. LENGTHS

FRAME SHROUDING AND TRIM

Starting Serial No. 8344001L
Thru Serial No. 8444490
Waukesha Engine
Serial No. 8444491
Perkins Engine
Revised 6-25-99

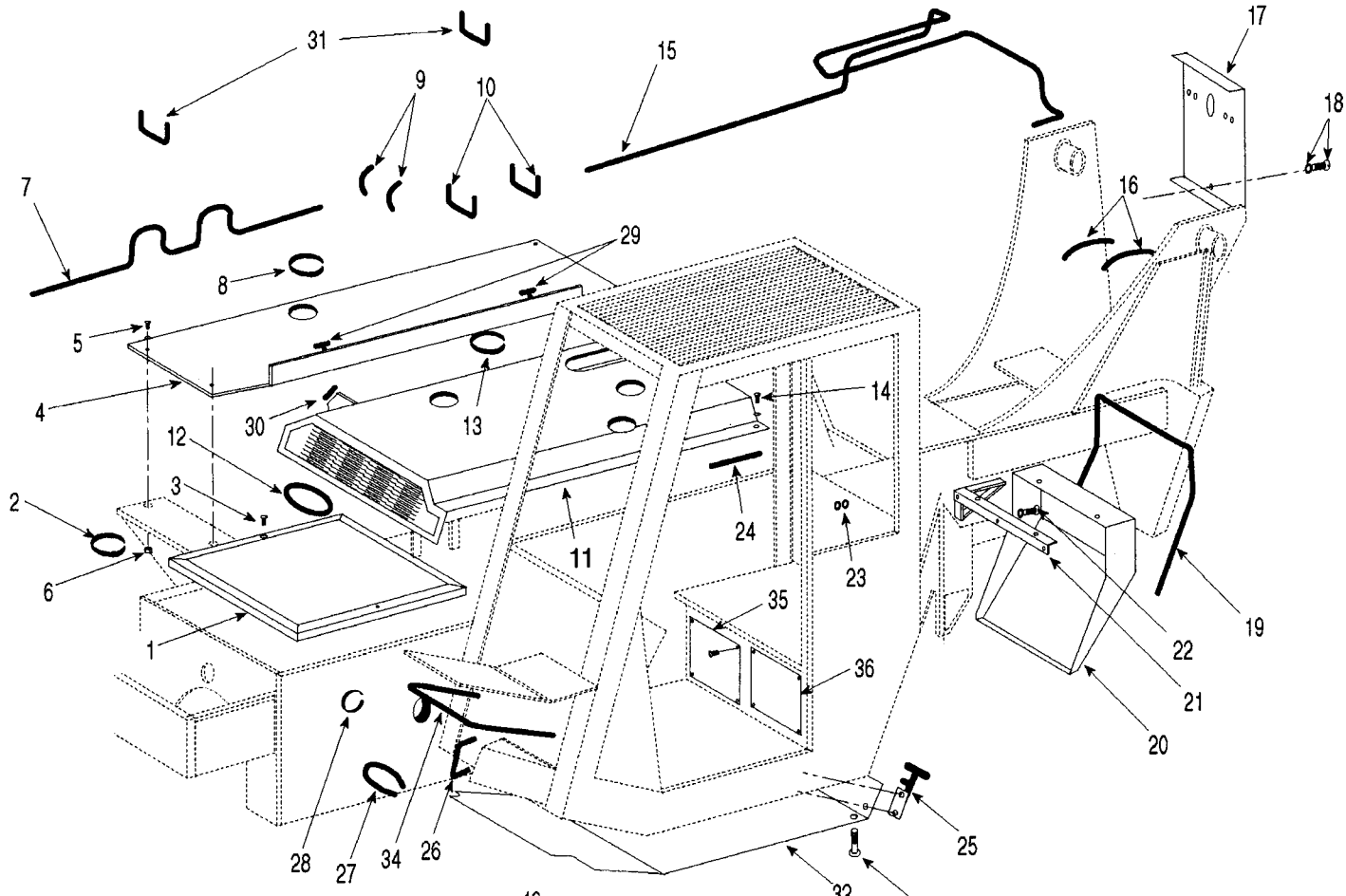

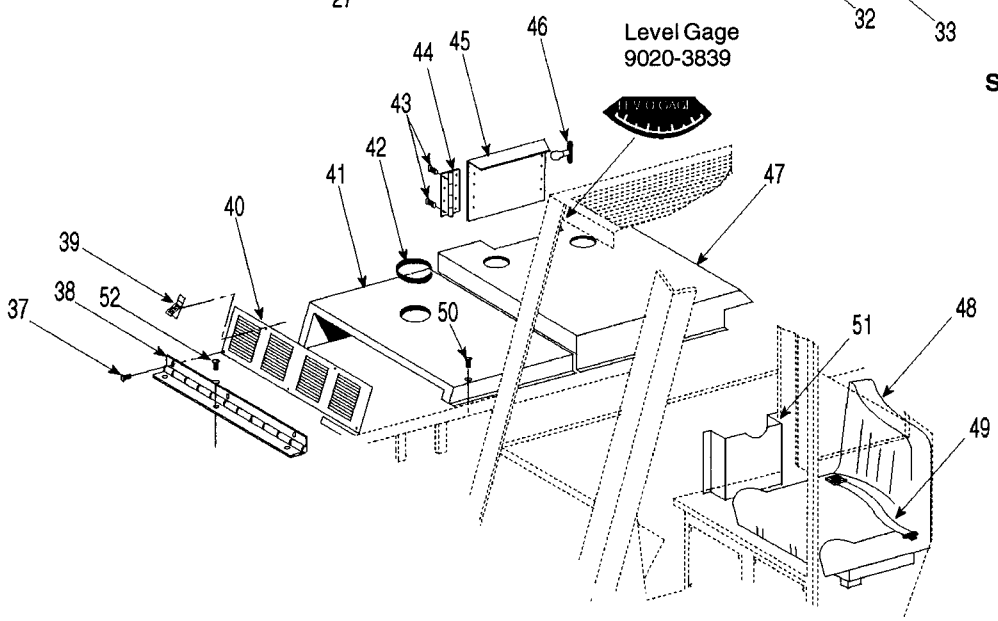

Perkins Engine
Starting Serial No. 8444491

** Changed page number on second page of 2-1 from 2-1.1 to 2-1.*

FRAME SHROUDING AND TRIM

Starting Serial No. 8344001L
Thru Serial No. 8444490
Waukesha Engine
Serial No. 8444491
Perkins Engine
Revised 6-25-99

Item	Part No.	Qty.	Description Of Part
1	9060-2887	1	MAINTENENCE DECK
2	9020-6200	*	TRIM
3	8820-1033	2	HEX HD CAPSCREW, 3/8-16X3/4, GR5
	8856-1109	2	FLAT WASHER, 3/8
4	9080-1339	1	TANK COVER (Waukesha)
	9103-1076	1	TANK COVER (S/N 8444490 thru 8644765)
	9103-1260	1	TANK COVER (starting S/N 8644766)
5	8820-1066	4	HEX HD CAPSCREW, 1/2-13X1-1/4, GR5
	8856-1111	4	FLAT WASHER, 1/2
6	8855-1013	4	LOCKWASHER, 1/2
	8852-1308	4	HEX LOCKNUT, 1/2-13
7	9020-6196	*	TRIM
8	9020-6196	*	TRIM
9	9020-6200	*	TRIM
10	9020-6194	*	TRIM
11	9080-1338	1	ENGINE COMPARTMENT COVER
12	9020-6200	*	TRIM
13	9020-6194	*	TRIM
14	9020-7512	1	COVER FASTENER
15	9020-6194	*	TRIM
16	9020-6203	*	TRIM
17	9040-3352	1	REAR BOOM COVER
18	9020-3959	4	WING BOLT
	8856-1109	4	WASHER
19	9020-6194	*	TRIM
20	9060-2888	1	REAR CAB COVER
21	9060-2885	1	REAR WINDOW BRACKET
22	8820-1005	3	HEX HD CAPSCREW, 1/4-20X1, GR5
23	8856-1107	3	FLAT WASHER, 1/4
	8850-1004	3	HEX NUT, 1/4-20
24	9020-6200	*	TRIM
25	9020-7458	2	REAR CAB COVER FASTENERS
26	9020-6196	*	TRIM
27	9020-6196	*	TRIM
28	9020-6200	*	TRIM
29	7716-3020	2	TANK COVER FASTENERS
30	9020-0755	1	WEATHER STRIP
31	9020-6196	*	TRIM
32	9060-2886	1	CAB BOTTOM COVER
33	7714-3003	7	BOLT
34	9020-6196	*	TRIM
35	9020-5730	1	VALVE COVER
	7714-3003	4	BOLT
	7710-3044	4	CLIP NUT
36	9020-5746	1	HEATHER COVER
	7714-3003	4	BOLT
	7714-3006	4	NUT

Item	Part No.	Qty.	Description Of Part
37	8826-1017	3	SOCKET BUTTON HD CAPSCREW, 1/4-20-7/8
	8856-1107	6	FLAT WASHER, 1/4
	8852-1304	3	HEX LOCKNUT, 1/4-20
38	9103-1075	1	HINGE
39	8368-3311	2	PAWL LATCH
	9103-3214	2	DRAW LATCH (starting S/N 8644733)
40	9103-1074	1	FRONT SERVICE DOOR
	9103-1261	1	FRONT SERVICE DOOR (starting S/N 8644733)
41	9103-6016	1	FRONT HOOD
42	9020-6194	*	TRIM
43	8826-1009	16	SOCKET BUTTON HD CAPSCREW, 10-24X5/8
	8856-1105	16	FLAT WASHER, #10
	8852-1605	16	HEX LOCKNUT, #10-24
44	9103-3077	1	HINGE
45	9103-1067	1	SIDE SERVICE DOOR
46	9020-7458	2	DRAW LATCH
47	9103-6015	1	REAR HOOD
	9103-6038	1	REAR HOOD (starting S/N 8544539)
48	9020-7278	1	SEAT
	8867-1164	2	SPACER
	7714-3006	4	NUT
49	9103-3029	1	SEAT BELT
	8820-1050	2	HEX HD CAPSCREW, 7/16-14X1, GR5
	8850-1007	2	HEX NUT, 7/16-14
50	8820-1003	8	HEX HD CAPSCREW, 1/4-20X3/4, GR5
	8855-1009	8	LOCKWASHER, 1/4
	8856-1107	8	FLATWASHER, 1/4
51	9103-3102	1	MANUAL HOLDER
	8830-1193	4	RDHD MACH. SCREW, #10-32X1/2
52	8832-1047	3	SELF TAPPING SCREW, 1/4-20X3/8

*** NOTE: ALL TRIM SOLD IN 25 FT. LENGTH**

CAB ENCLOSURE, WIPER, & DEFROSTER

Starting Serial No. 8344001L
Revised 6-25-99

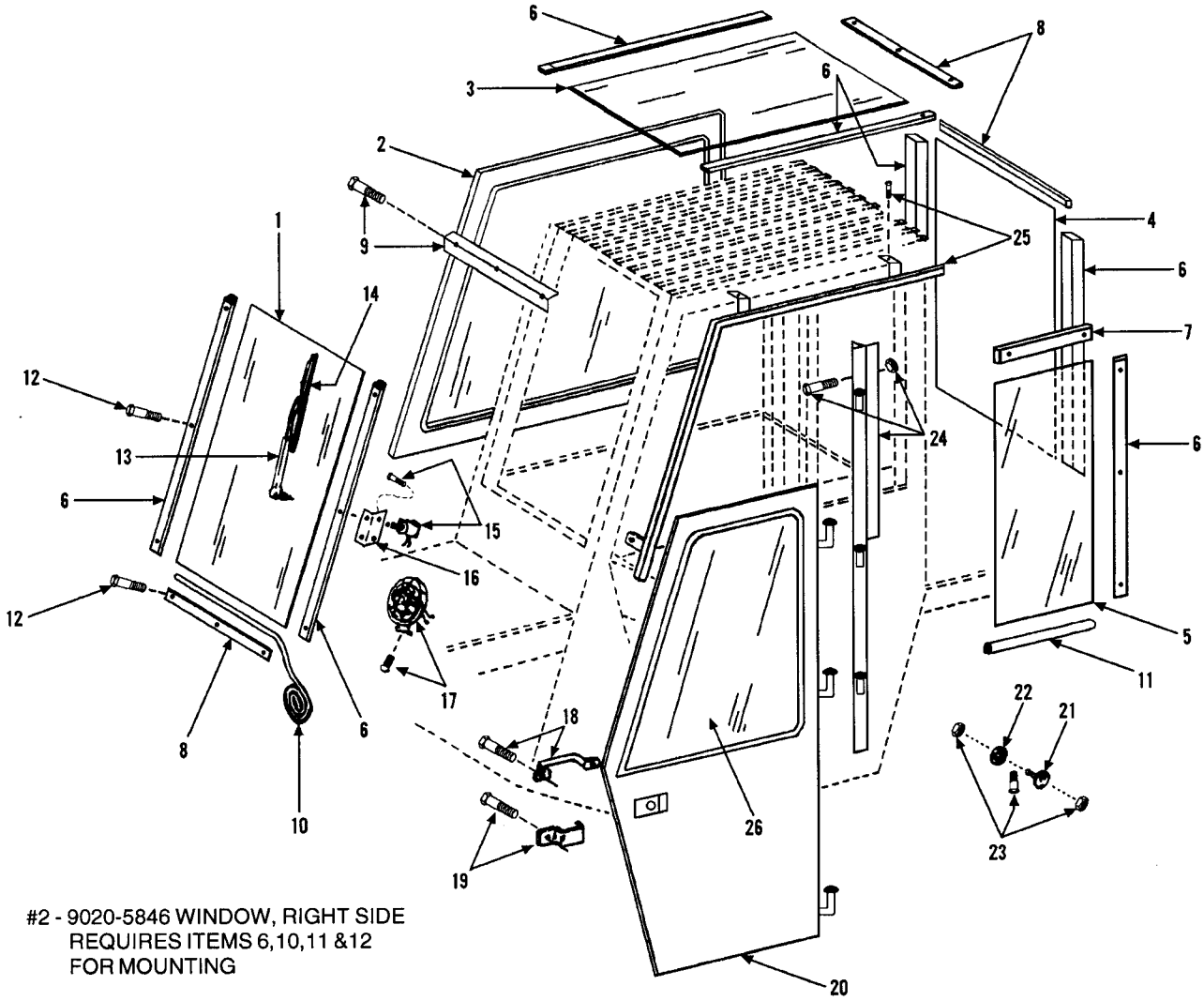

#2 - 9020-5846 WINDOW, RIGHT SIDE
REQUIRES ITEMS 6,10,11 &12
FOR MOUNTING

Item	Part No.	Qty.	Description Of Part
1	9040-3036	1	FRONT WINDOW
2	9020-5846	1	RIGHT SIDE WINDOW
3	9040-3034	1	TOP WINDOW
4	9040-3035	1	REAR WINDOW
5	9040-3033	1	LEFT SIDE WINDOW
6	9020-6019	AR	WINDOW HOLD DOWN BAR
7	9020-6017	1	HOLD DOWN BAR (left top)
8	9020-6018	3	HOLD DOWN BAR
9	9020-6613	1	SUPPORT ANGLE (window to cab)
	8820-1031	2	HEX HD CAPSCREW, 3/8-16x1/2, GR5
	8855-1011	2	LOCKWASHER, 1/2
10	9020-0755	50'	WEATHER STRIPPING (bulk)
11	9020-6100	AR	RUBBER GLAZING STRIP
12	9002-7319	AR	SELF TAPPING SCREW, 1/4-14X1-1/4 (window bar hold down)
13	9103-3464	1	WINDSHIELD WIPER ARM
14	9103-3465	1	WIPER BLADE
15	9020-6023	1	WIPER MOTOR
	9002-7214	1	WIPER SHAFT GROMMET (not shown)
16	9020-6025	1	WIPER MOTOR MOUNTING ANGLE
	8820-1003	1	HEX HD CAPSCREW, 1/4-20X3/4, GR5
	8850-1004	1	HEX NUT, 1/4-20
17	9020-0680	1	DEFROSTER FAN
	8832-1015	4	SELF TAPPING SCREW
18	9020-3840	1	DOOR PULL HANDLE
	8832-1039	2	SELF TAPPING SCREW, #10-32X1/2
19	9020-3627	1	HANDLE
	8820-1031	1	HEX HD CAPSCREW, 3/8-16X1/2, GR5
20	9080-1238	1	DOOR ASSY
	9103-4033	1	DOOR LATCH
21	9020-5886	1	DOOR HOLD PLUNGER
22	9020-5888	1	PLUNGER SOCKET
23	8830-1309	4	FLAT HD MACHINE SCREW, 1/4-20X3/4
	8852-1304	4	HEX NUT, 1/4-20
24	9040-3082	1	DOOR POST
	8820-1039	4	HEX HD CAPSCREW, 3/8-16X2, GR5
	8850-1006	4	HEX NUT, 3/8-16
25	9040-3032	1	DOOR TROUGH
	9002-7319	3	SELF TAPPING SCREW, 1/4 NC X 1
26	9041-0229	1	DOOR WINDOW
	8366-1145	8FT	WEATHER STRIPPING (bulk)

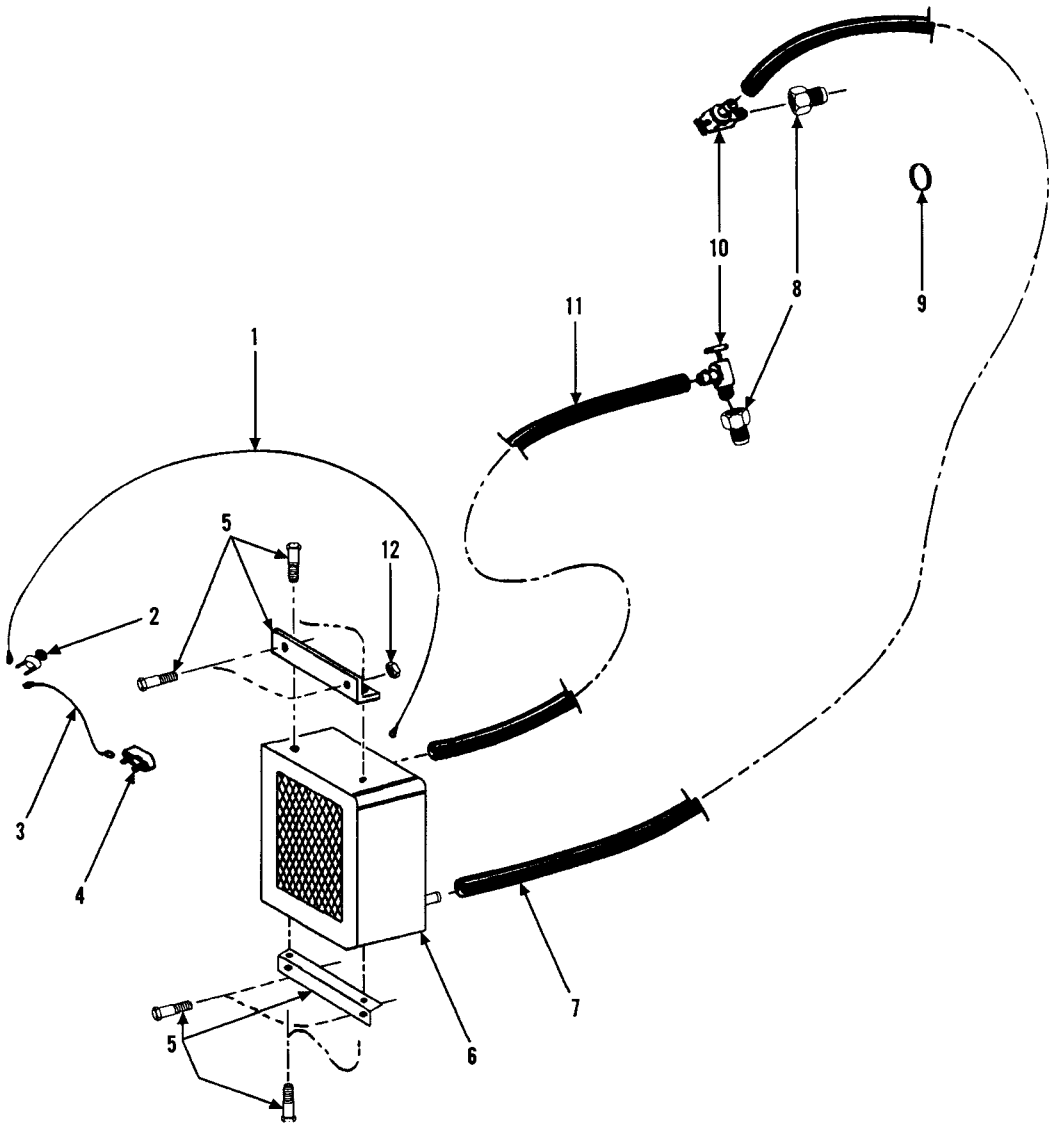

Item	Part No.	Qty.	Description Of Part
1	9020-6134	1	JUMPER WIRE
2	9103-4098	1	SWITCH (comes with heater)
3	9020-6133	1	JUMPER WIRE
4	9020-6131	1	CIRCUIT BREAKER
5	9020-5731	2	MOUNTING BRACKET
	8820-1005	8	HEX HD CAPSCREW 1/4-20x1 GR5
6	9020-0679	1	HEATER (includes item #2 switch)
7		1	HOSE, 5/8" I.D.
8	8871-1383	2	REDUCING BUSHING 1/2x3/8
9	8668-3193	4	CLAMP
10	2464-1328	2	SHUT-OFF VALVE
11		1	HOSE, 5/8" I.D.
12	8850-1004	4	HEX NUT, 1/4-20
			NOTE: ONLY ITEMS WITH PART NUMBERS ARE AVAILABLE FOR SERVICE.

FRONT AXLE & MOUNTING

Starting Serial No. 8344001L
Thru Serial No. 8444490
Waukesha Engine
Revised 6-25-99

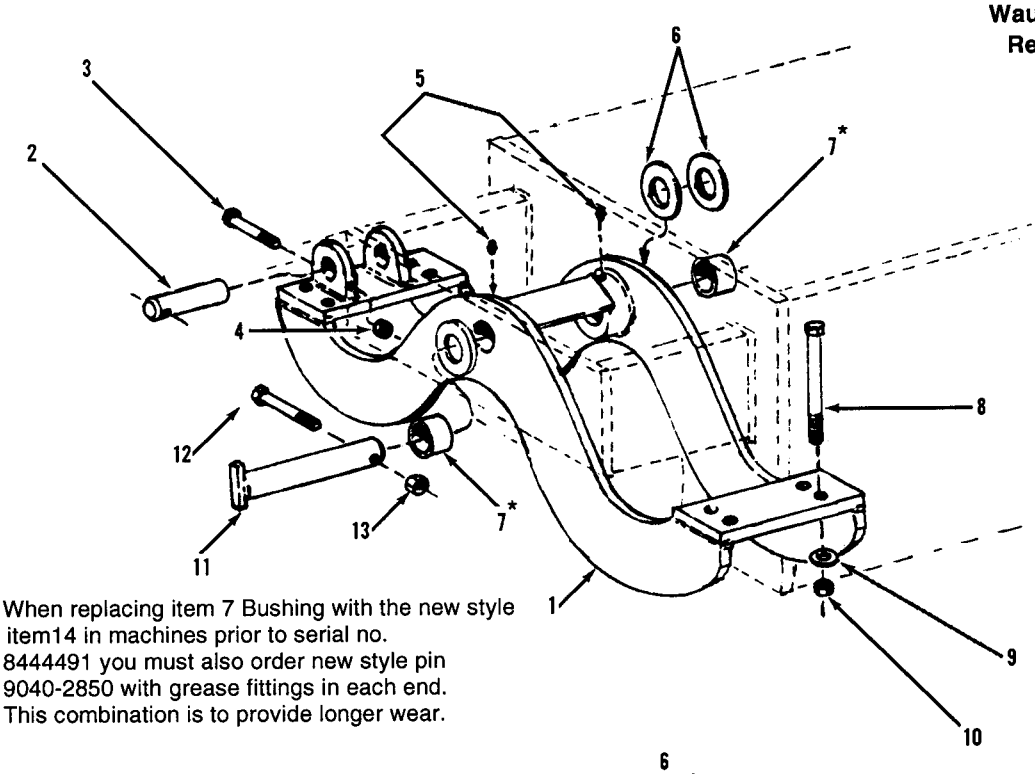

*NOTE: When replacing item 7 Bushing with the new style item14 in machines prior to serial no. 8444491 you must also order new style pin 9040-2850 with grease fittings in each end. This combination is to provide longer wear.

Starting Serial No. 8444491
Perkins Engine

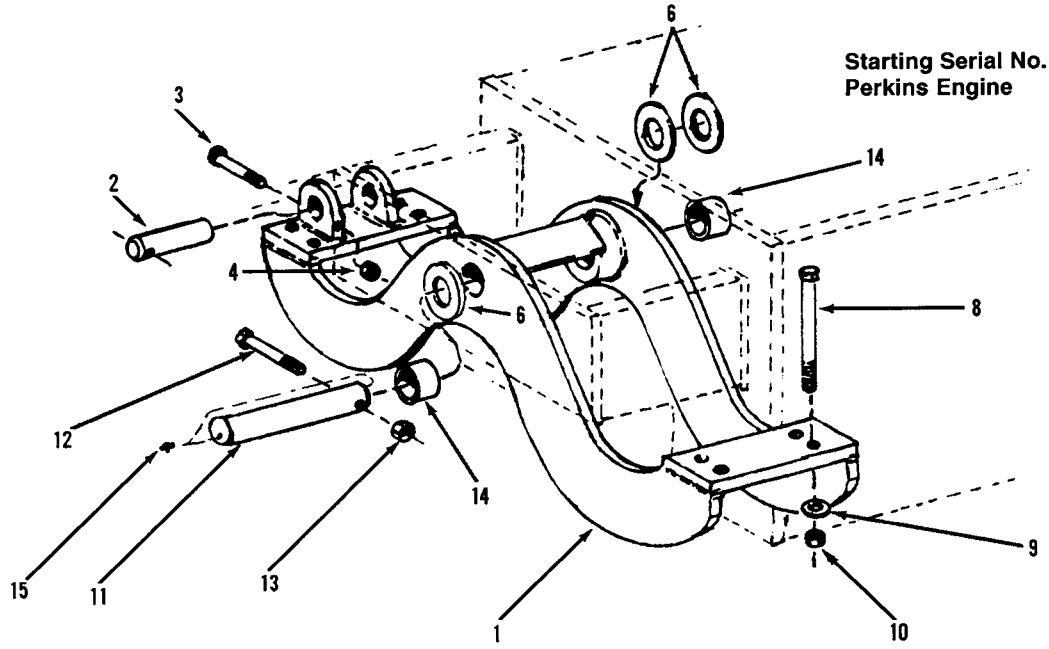

Item	Part No.	Qty.	Description Of Part
1	9080-1303	1	FRONT AXLE CRADLE
2	9020-6847	1	SWAY CYLINDER ROD PIN
3	8820-1119	1	HEX HEAD CAPSCREW 3/4-10x4, GR5
4	8850-1012	1	HEX NUT 3/4-10
5	8867-1008	2	LUBE FITTING-STRAIGHT 1/4-28
6	9020-5891	2	SPACER
*7	9020-5489	2	BUSHING
8	9004-1002	8	HEX HEAD CAPSCREW 1-8x9-1/2

Item	Part No.	Qty.	Description Of Part
9	9002-7475	8	WASHER
10	8852-1216	8	HEX LOCKNUT 1-8
11	9040-2850	1	FRAME PIN
	9103-1243	1	FRAME PIN (Starting serial no. 8544706
12	8320-1031	1	HEX HEAD CAPSCREW 1-8x5, GR8
13	8852-1016	1	HEX LOCKNUT 1-8
14	9103-1096	2	BUSHING
15	8867-1001	2	LUBE FITTING-STRAIGHT 1/8

REAR STEERING AXLE & ATTACHING PARTS

Starting Serial No. 8344001L
Thru Serial No. 8444490
Revised 6-25-99

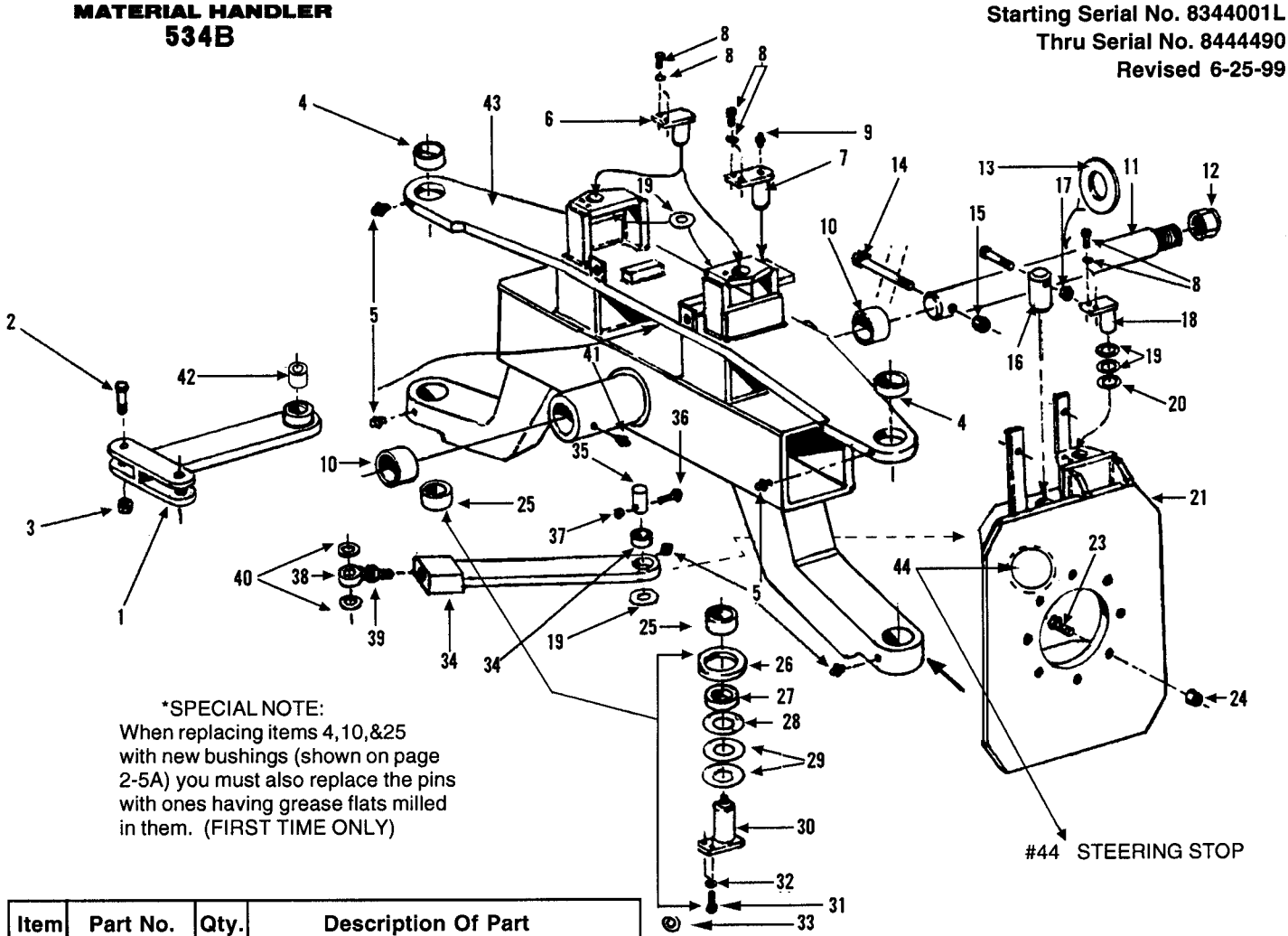

*SPECIAL NOTE:
When replacing items 4,10,&25 with new bushings (shown on page 2-5A) you must also replace the pins with ones having grease flats milled in them. (FIRST TIME ONLY)

Item	Part No.	Qty.	Description Of Part
1	9060-2826	1	ARM, IDLER
2	8320-1074	2	CAPSCREW, HEX HEAD 1-8x4
3	8852-1216	2	NUT, 1-8
*4	9020-5462	2	BUSHING, UPPER FRAME
5	8867-1008	8	FITTING, GREASE
6	9020-7419	2	PIN, STEERING CYLINDER BASE
7	9020-6895	1	PIN, IDLER ARM MOUNT
8	8320-1011	10	CAPSCREW, 3/8-16x1
	9002-7470	10	WASHER, 3/8
9	8867-1022	2	FITTING, GREASE
*10	9020-5482	2	BUSHING
11	9040-3196	1	PIN, REAR AXLE TO FRAME USED UP TO SERIAL NO. 8344200L
	9041-0287	1	PIN, REAR AXLE TO FRAME STARTING SERIAL NO.8444135
12	9002-2234	1	NUT, HEX SELF LOCKING
13	9020-6846	AR	SHIM, 1/8
	9103-1009	AR	SHIM, 1/16
14	9002-0247	1	CAPSCREW, 1-1/4-7x6
15	8510-1098	1	LOCK NUT, 1-1/4-7
	8856-1119	1	WASHER
16	9020-6897	2	PIN, STEERING KNUCKLE TO FRAME (UPPER)
17	8820-1077	2	CAPSCREW, 1/2-13x4
	8850-1008	2	NUT, HEX 1/2-13
18	9020-6895	2	PIN, STEERING CYLINDER
19	9020-3139	AR	SHIM, 1/16
20	9020-1918	2	BEARING, THRUST, 1/8
21	9080-1312	1	KNUCKLE, L.H. STEER (SHOWN)
22	9080-1311	1	KNUCKLE, R.H. STEER (NOT SHOWN)

Item	Part No.	Qty.	Description Of Part
23	8320-1062	16	BOLT, torque hub mount (grade 8)
	9002-7472	16	WASHER, hardened
24	8850-1110	16	NUT, 5/8-11
*25	9020-5465	2	BUSHING, LOWER FRAME
26	9020-7484	AR	FELT, 1/2
	9020-7485	AR	FELT, 1/4
27	9020-6542	2	BEARING, THRUST
28	9020-0253	2	WASHER, THRUST
29	9020-3039	AR	SHIM,1/16
	9020-3040	AR	SHIM, 1/8
30	9020-6900	2	PIN, STEERING, KNUCKLE TO FRAME (LOWER)
31	8320-1026	4	CAPSCREW, 1/2-13x1-1/2
32	8540-1340	4	WASHER, 1/2
33	9020-3168	AR	WIRE, SAFETY LOCK 50 FT
34	9040-3184	2	ARM
	9020-6375	2	BUSHING
35	9020-6896	2	PIN
36	8820-1041	2	CAPSCREW, 3/8-16x2-1/2
37	8852-1306	2	NUT, HEX
38	9020-1902	2	BUSHING,SELF ALIGNING
39	8850-1420	2	NUT, LOCK 1-1/4-12
40	9020-5653	4	SHIM
41	8867-1001	2	FITTING, GREASE
42	9020-5340	1	BUSHING
43	9080-1306	1	AXLE,WELDMENT
44	8820-1097	2	CAPSCREW, 5/8-11x2
	8850-1110	2	NUT, 5/8-11

REAR STEERING AXLE & ATTACHING PARTS

Serial No. 8444491G thru 8644030G
Perkins Engine Only
Original Issue 2-85
Revised 6-25-99

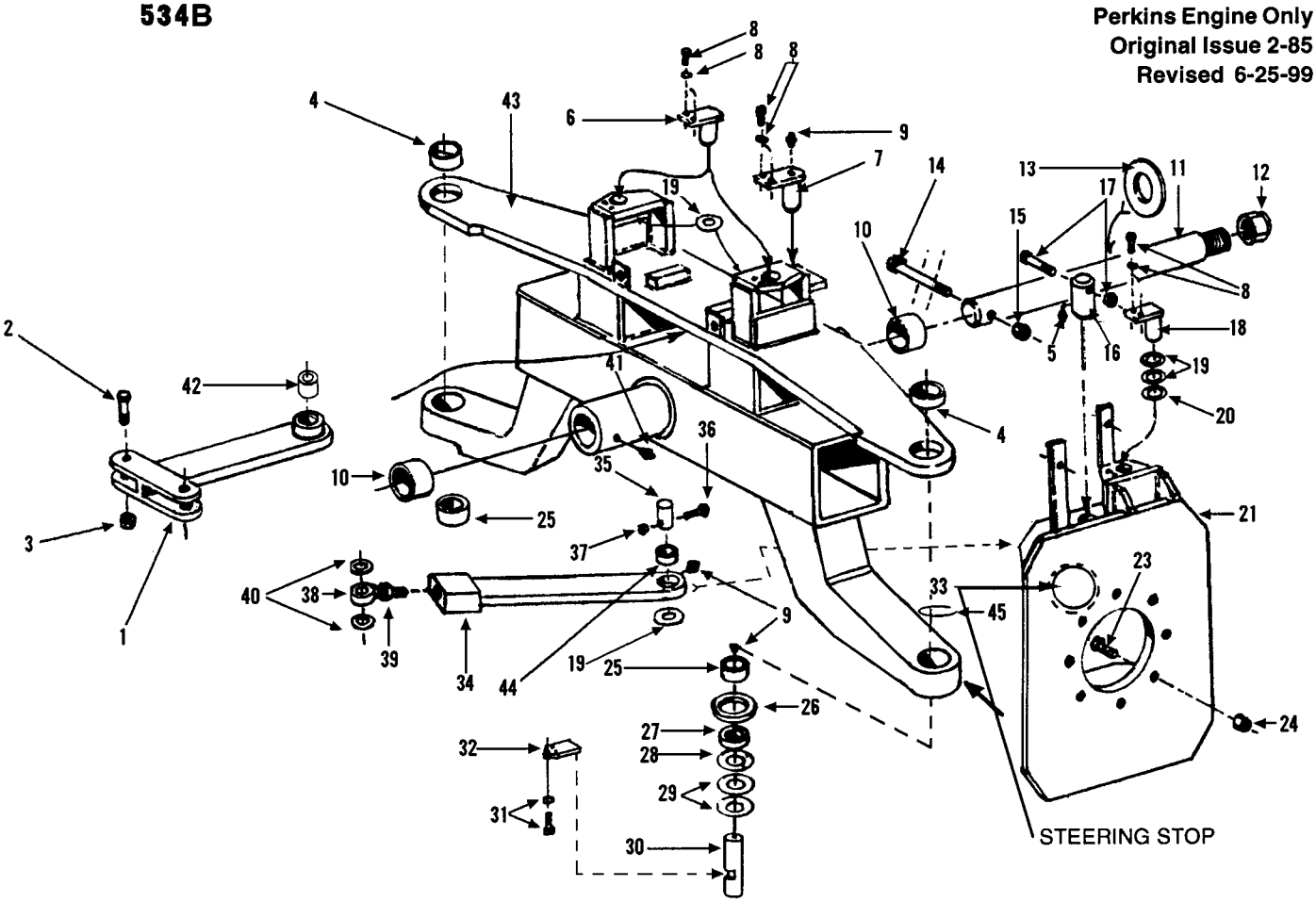

Item	Part No.	Qty.	Description Of Part
	9103-5128	1	AXLE REBUILD KIT (consists of items 4,6,7,10,16,18,20,25,28,29,30,32,35,40,42, 44)
	9103-5122	1	STEERING KNUCKLE KIT (consists of items 4,16,25 thru 30, & 32)
1	9060-2826	1	IDLER ARM
2	8320-1040	2	HEX HD CAPSCREW, 1-8x4-1/4, GR8
3	8852-1316	2	HEX LOCKOUT, 1-8
4	9103-1374	2	BUSHING
5	8867-1001	4	LUBE FITTING- STRAIGHT 1/8
6	9020-7419	2	PIN (steering cylinder base)
7	9020-6895	1	PIN (idler arm mount)
8	8320-1024	10	HEX HD CAPSCREW, 3/8-16x1,GR8
9	8867-1022	12	LUBE FITTING-90 DEGREES 1/8
10	9103-1369	2	BUSHING
11	9041-0287	1	PIN (rear axle to frame)
12	9002-2234	1	SELF LOCKING HEX NUT
13	9020-6846	AR	SHIM,1/8
	9103-1009	AR	SHIM, 1/16
14	9002-0247	1	HEX HD CAPSCREW, 1-1/4-7x6
15	8510-1098	1	HEX LOCKNUT, 1-1/4-7
	8856-1119	1	FLAT WASHER, 1-1/4
16	9103-1340	2	PIN (steering, knuckle to frame)
17	8820-1077	2	HEX HD CAPSCREW, 1/2-13x4, GR5
	8850-1008	2	HEX NUT, 1/2-13
18	9020-6895	2	PIN (steering cylinder rod)
19	9020-3139	AR	SHIM, 1/16
20	9020-1918	2	THRUST BEARING, 1/8
21	9080-1312	1	STEERING KNUCKLE (left)
22	9080-1311	1	STEERING KNUCKLE (right)

Item	Part No.	Qty.	Description Of Part
23	8320-1062	16	CAPSCREW, (torque hub mount) GR8
	9002-7472	16	WASHER
24	8850-1110	16	HEX NUT, 5/8-11
25	9103-1391	2	BUSHING
26	9020-7484	AR	FELT, 1/2
	9020-7485	AR	FELT, 1/4
27	9020-6542	2	THRUST BEARING
28	9020-0253	2	THRUST WASHER
29	9020-3039	AR	SHIM, 1/16
	9020-3040	AR	SHIM, 1/8
30	9103-1344	2	PIN (steering knuckle to frame)
31	8320-1129	6	HEX HD CAPSCREW, 1/2-13x1-1/4, GR8
	8540-1340	6	WASHER, 1/2
32	9103-1345	2	KEY PLATE
33	8320-1102	2	HEX HD CAPSCREW, 5/8-11x2
	8850-1110	2	HEX NUT, 5/8-11
34	9040--3184	2	ARM
35	9020-6896	2	PIN
36	8820-1041	2	HEX HD CAPSCREW, 3/8-16x2-1/2, GR5
37	8852-1306	2	HEX LOCKNUT, 3/8-16
38	9020-7842	2	SELF ALIGNING BUSHING
39	8850-1420	2	HEX LOCKNUT, 1-1/4-12
40	9020-5653	4	SHIM
41	8867-1018	2	LUBE FITTING - 45 DEGREES, 1/8
42	9020-5340	1	BUSHING
43	9080-1306	1	AXLE WELDMENT
44	9103-1397	2	BUSHING
45	8858-1144	2	RETAINING RING

** Changed page number from 2-5A to 2-5.*

REAR STEERING AXLE & ATTACHING PARTS

Starting Serial No. 8644031G
Original Issue 6-25-99

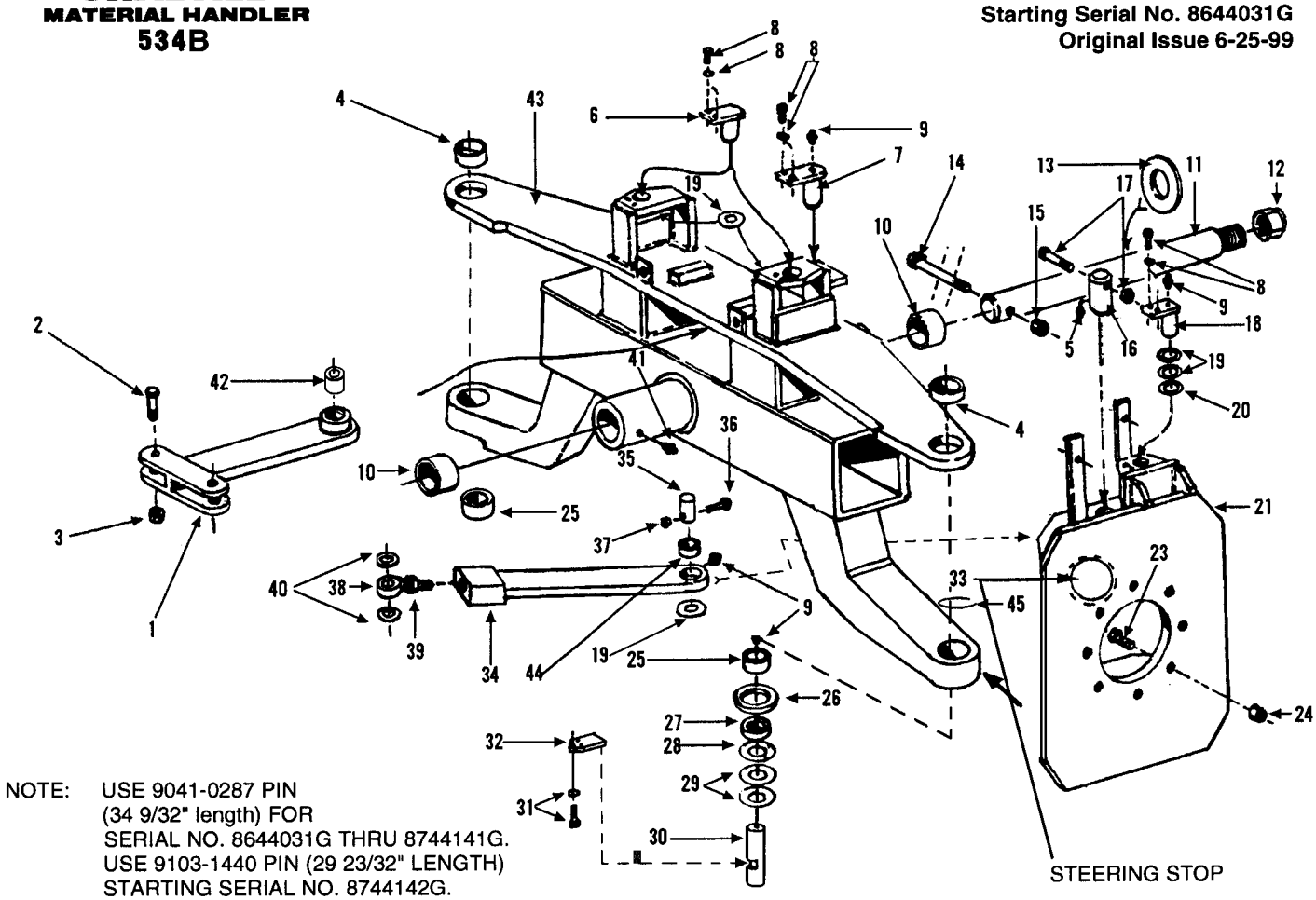

NOTE: USE 9041-0287 PIN
(34 9/32" length) FOR
SERIAL NO. 8644031G THRU 8744141G.
USE 9103-1440 PIN (29 23/32" LENGTH)
STARTING SERIAL NO. 8744142G.

Item	Part No.	Qty.	Description Of Part
	9106-5036	1	AXLE REBUILD KIT (consists of items 4,7,16,18,19,20,25 thru 30,32,35,40, 42,44)
	9103-5122	1	STEERING KNUCKLE KIT (consists of items 4,16,25 thru 30, & 32)
1	9060-2826	1	IDLER ARM
2	8320-1040	2	HEX HD CAPSCREW, 1-8x4-1/4, GR8
3	8852-1316	2	HEX LOCKOUT, 1-8
4	9103-1374	2	BUSHING
5	8867-1001	4	LUBE FITTING- STRAIGHT 1/8
6	9020-7419	2	PIN (steering cylinder base)
7	9020-6895	1	PIN (idler arm mount)
8	8320-1024	10	HEX HD CAPSCREW, 3/8-16x1,GR8
	9002-7470	10	WASHER, 3/8
9	8867-1022	12	LUBE FITTING-90 DEGREES 1/8
10	9103-1369	2	BUSHING
11	SEE NOTE	1	REAR AXLE MOUNTING PIN
12	9002-2234	1	SELF LOCKING HEX NUT
13	9020-6846	AR	SHIM,1/8
	9103-1009	AR	SHIM, 1/16
14	9002-0247	1	HEX HD CAPSCREW, 1-1/4-7x6
15	8510-1098	1	LOCKNUT, 1-1/4-7
	8856-1119	1	FLAT WASHER, 1-1/4
16	9103-1340	2	PIN (steering, knuckle to frame)
17	8820-1077	2	HEX HD CAPSCREW, 1/2-13x4, GR5
	8850-1008	2	HEX NUT, 1/2-13
18	9103-6043	2	PIN (steering cylinder rod)
19	9020-3139	AR	SHIM, 1/16
20	9020-1918	2	THRUST BEARING, 1/8
21	9103-0003	1	STEERING KNUCKLE (left)
22	9103-0004	1	STEERING KNUCKLE (right)

Item	Part No.	Qty.	Description Of Part
23	8320-1062	16	CAPSCREW, (torque hub mount) GR8
	9902-7472	16	WASHER
24	8850-1110	16	HEX NUT, 5/8-11
25	9103-1391	2	BUSHING
26	9020-7484	AR	FELT, 1/2
	9020-7485	AR	FELT, 1/4
27	9020-6542	2	THRUST BEARING
28	9020-0253	2	THRUST WASHER
29	9020-3039	AR	SHIM, 1/16
	9020-3040	AR	SHIM, 1/8
30	9103-1344	2	PIN (steering knuckle to frame)
31	8320-1129	6	HEX HD CAPSCREW, 1/2-13x1-1/4, GR8
	8540-1340	6	WASHER, 1/2
32	9103-1345	2	KEY PLATE
33	8320-1102	2	HEX HD CAPSCREW, 5/8-11x2, GR8
	8850-1110	2	HEX NUT, 5/8-11
34	9040-3184	2	ARM
35	9020-6896	2	PIN
36	8820-1041	2	HEX HD CAPSCREW, 3/8-16x2-1/2, GR5
37	8852-1306	2	HEX LOCKNUT, 3/8-16
38	9020-7842	2	SELF ALIGING BUSHING
39	8850-1420	2	HEX JAM NUT, 1-1/4-12
40	9020-5653	4	SHIM
41	8867-1018	2	LUBE FITTING - 45 DEGREES, 1/8
42	9020-5340	1	BUSHING
43	9080-1306	1	AXLE WELDMENT
44	9103-1397	2	BUSHING
45	8858-1144	2	RETAINING RING

** Changed page number from 2-5A to 2-5.*

*NOTE: When ordering items no. 2,4,6,10,23, & 27 bearings for machines prior to S/N 8544678, new mounting hardware must also be purchased to match with fine thread bearings.

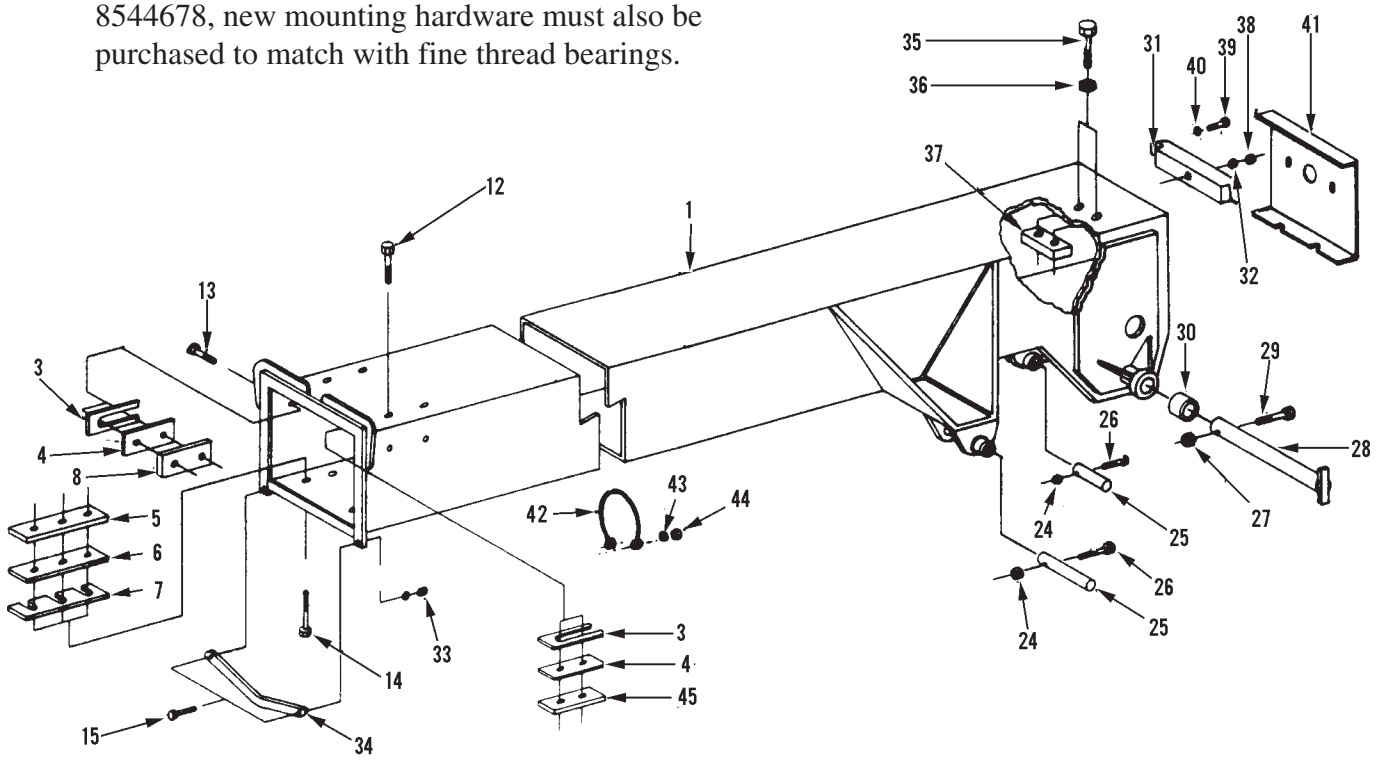

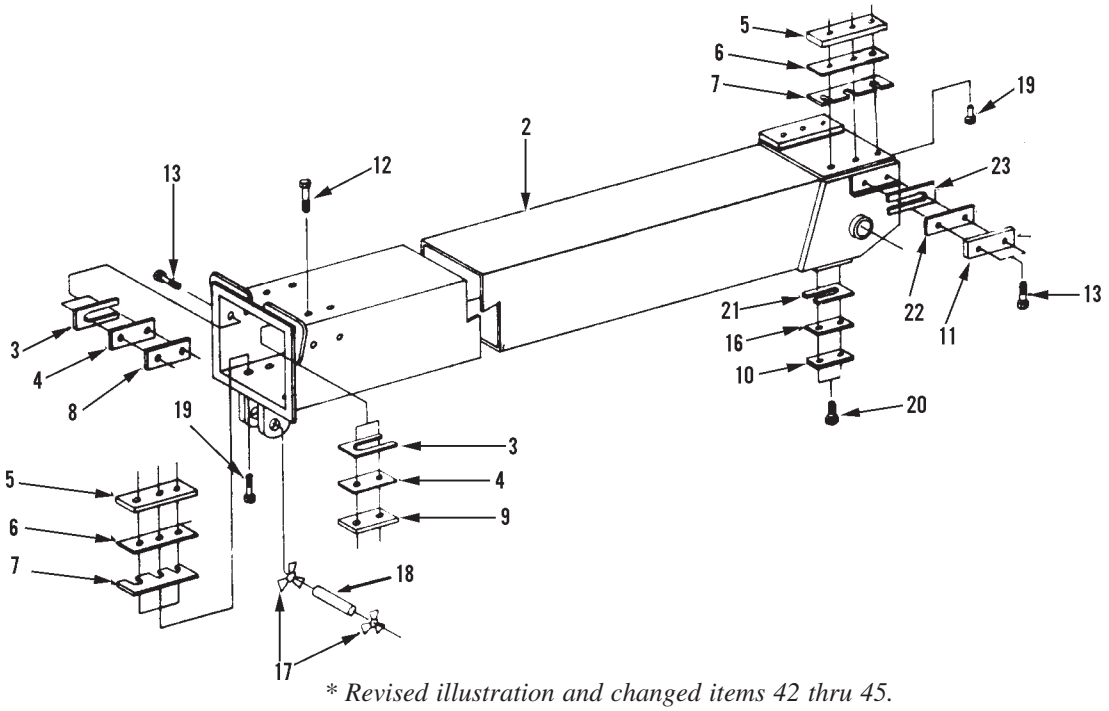

** Revised illustration and changed items 42 thru 45.*

1st & 2nd BOOM SECTIONS

Starting Serial No. 8344001L
Revised 11-08-05

Item	Part No.	Qty.	Description Of Part
1	9103-6035	1	1ST BOOM SECTION (thru serial no. 8744141G)
*	9103-5148	1	1ST BOOM SECTION (starting serial no. 8744142G)
	9103-6070	1	BOOM WELDMENT
	9103-1384	2	BUSHING
2	9103-6036	1	2ND BOOM SECTION
3	9020-5870	12	SLOTTED SHIM
4	9103-1236	12	PUNCHED HOLE SHIM
5	9103-3190	6	BEARING
6	9103-1237	12	PUNCHED HOLE SHIM
7	9020-5497	12	SLOTTED SHIM
8	9103-3186	4	BEARING
9	9103-3189	2	BEARING
10	9103-3188	2	BEARING
11	9103-3184	2	BEARING
12	8820-1533	8	HEX HD CAPSCREW, 3/8-24x7/8 Gr5
13	8820-1532	12	HEX HD CAPSCREW, 3/8-24x3/4 Gr5
14	8820-1566	6	HEX HD CAPSCREW, 1/2-20x1-1/2 Gr5
15	8820-1067	2	HEX HD CAPSCREW, 1/2-13x1-1/2 Gr5
16	9103-1234	2	PUNCHED HOLE SHIM
17	9002-8935	2	SNAP RING
18	9020-7352	1	CROWD CYLINDER ROD PIN
19	8820-1563	12	HEX HD CAPSCREW, 1/2-20x7/8 Gr5
20	8820-1534	4	HEX HD CAPSCREW, 3/8-24x1, Gr5
21	9020-7029	2	SLOTTED SHIM
22	9103-1235	4	PUNCHED HOLE SHIM
23	9020-7030	4	SLOTTED SHIM
	9103-1383	2	SHIM
24	8850-1010	3	HEX NUT, 5/8-11
25	9020-6892	3	CROWD BASE & LIFT ROD PIN
26	8820-1105	3	HEX HD CAPSCREW, 5/8-11x4, Gr5
27	8850-1010	1	HEX NUT, 5/8-11
28	9040-3280	1	BOOM BASE PIN
29	8820-1106	1	HEX HD CAPSCREW, 5/8-11x4-1/2 Gr5
30	9103-1369	2	BUSHING
31	9060-2842	1	STRONGBACK
32	9002-8965	1	HEX NUT, 1-8
33	8850-1008	2	HEX NUT, 1/2-13
34	9040-3212	1	CROWD CYLINDER HANGER
35	8508-1016	2	CAPSCREW
36	0510-1441	2	HARDENED WASHER
37	9103-1163	1	STOP BAR
38	8850-1116	1	HEAVY HEX JAM NUT, 1-8
39	8820-1069	2	HEX HD CAPSCREW, 1/2-13x2, Gr5
40	8540-1340	2	WASHER
41	9040-3352	1	BOOM COVER
	8856-1109	4	FLAT WASHER, 3/8
	9020-3959	4	WING BOLT
42	9020-7575	1	TIE DOWN CORD
43	8856-1109	2	FLAT WASHER, 3/8
44	8850-1004	2	HEX NUT, 1/4-20
45	9103-3185	2	BEARING

*NOTE: For service replacement of 1st section boom on units with serial no. 8744142G thru 0144297J excluding machine 0144263J, provide 9103-5148 1st section boom, consisting of 9103-6070 weldment and two 9103-1384 bushings.

** Revised illustration and changed items 42 thru 45.*

1st & 2nd BOOM SECTIONS

Starting Serial No. 0144298J
Also Machine Serial No. 0144263J
Original Issue 2-8
Revised 11-08-05

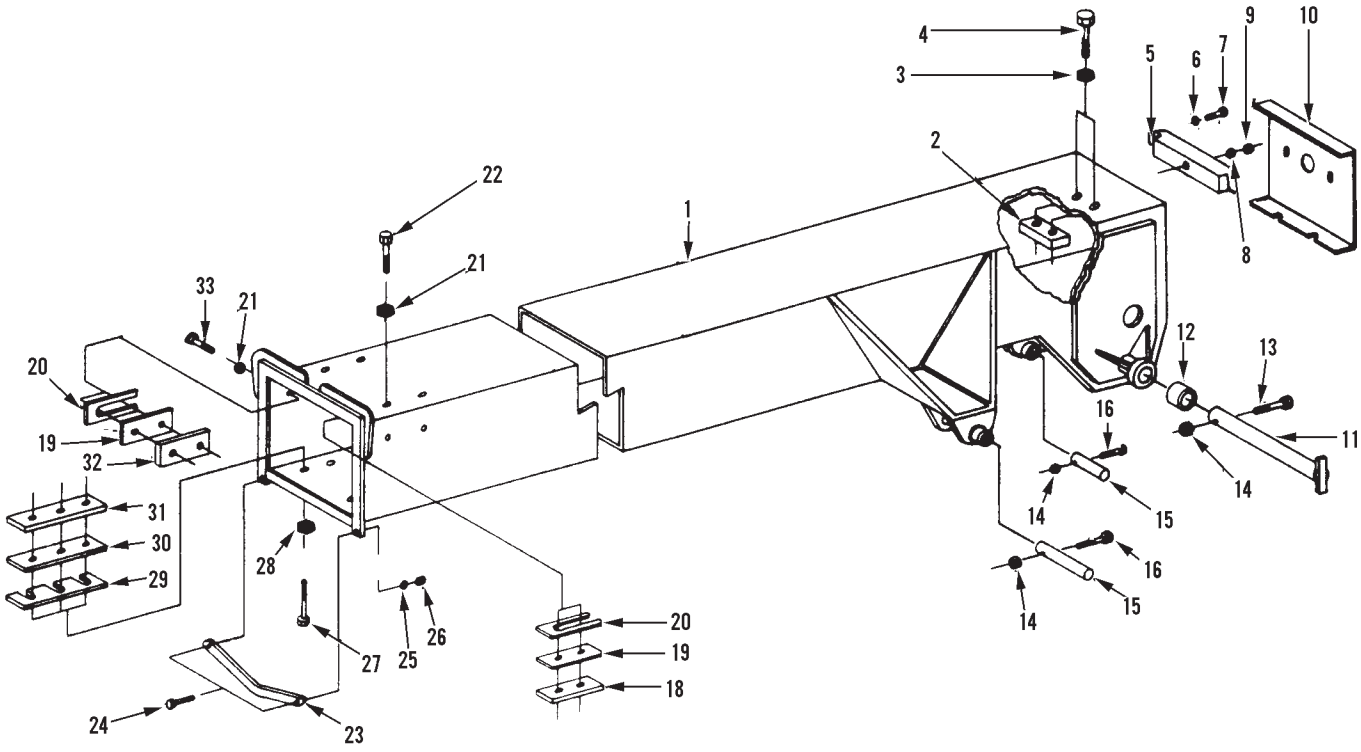

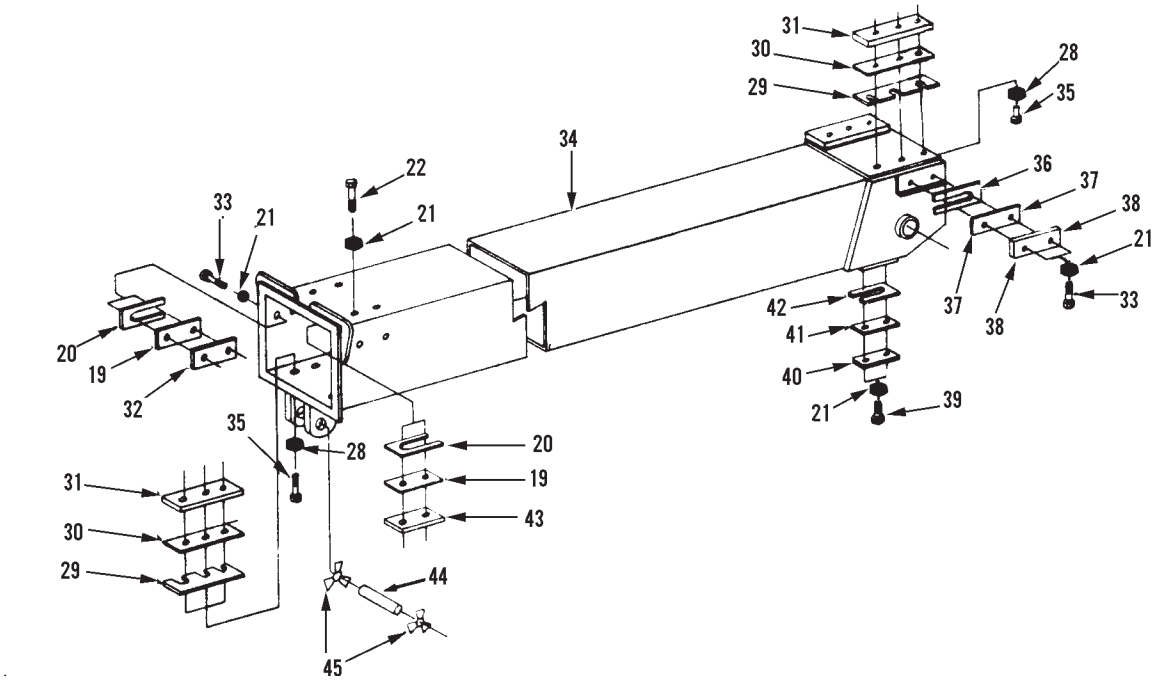

** Revised illustration and removed item 17.*

1st & 2nd BOOM SECTIONS

Starting Serial No. 0144298J
Also Machine Serial No. 0144263J
Original Issue 2-88
Revised 11-08-05

Item	Part No.	Qty.	Description Of Part
1	9103-6070	1	1st BOOM SECTION
2	9103-1163	1	STOP BAR
3	0510-1441	2	HARDENED WASHER
4	8320-1053	3	HEX HD CAPSCREW, 1-8x3, GR8
5	9060-2842	1	STRONGBACK
6	8540-1340	2	WASHER
7	8820-1069	2	HEX HD CAPSCREW, 1/2-13x2, GR5
8	9002-8965	1	HEX NUT, 1-8
9	8850-1116	1	HEAVY HEX JAM NUT, 1-8
10	9040-3352	1	BOOM END COVER
	8856-1109	4	FLAT WASHER, 3/8
	9020-3959	4	WING BOLT
11	9103-1389	1	BOOM BASE PIN
12	9103-1371	2	BUSHING
13	8348-1645	1	HEX HD CAPSCREW, 5/8-11x6, GR8
14	8852-1010	4	HEX LOCKNUT, 5/8-11
15	9020-6892	3	CROWD BASE & LIFT ROD PIN
16	8320-1044	3	HEX HD CAPSCREW, 5/8-11x4, GR8
* 17	Not Used		
18	9103-3185	2	BEARING PAD
19	9103-1236	12	PUNCHED HOLE SHIM
20	9020-5870	12	SLOTTED SHIM
21	8856-1109	48	FLAT WASHER, 3/8
22	8820-1533	8	HEX HD CAPSCREW, 3/8-24x7/8, GR5
23	9040-3212	1	CROWD CYLINDER HANGER
24	8820-1067	2	HEX HD CAPSCREW, 1/2-13x1-1/2, GR5
25	8855-1013	2	LOCKWASHER, 1/2
26	8850-1008	2	HEX NUT, 1/2-13
27	8820-1567	6	HEX HD CAPSCREW, 1/2-20x1-3/4, GR5
28	8856-1111	18	FLAT WASHER, 1/2
29	9020-5497	12	SLOTTED SHIM
30	9103-1237	12	PUNCHED HOLE SHIM
31	9103-3190	6	BEARING PAD
32	9103-3186	4	BEARING PAD
33	8820-1532	12	HEX HD CAPSCREW, 3/8-24x3/4, GR5
34	9103-6036	1	2ND BOOM SECTION
35	8820-1563	12	HEX HD CAPSCREW, 1/2-20x7/8, GR5
36	9020-7030	4	SLOTTED SHIM
37	9103-1235	4	PUNCHED HOLE SHIM
38	9103-3184	2	BEARING PAD
39	8820-1534	2	HEX HD CAPSCREW, 3/8-24x1,GR5
40	9103-3188	2	BEARING PAD
41	9103-1234	2	PUNCHED HOLE SHIM
42	9020-7029	2	SLOTTED SHIM
43	9103-3189	2	BEARING PAD
44	9020-7352	1	CROWD CYLINDER PIN
45	9002-8935	2	SNAP RING

** Revised illustration and removed item 17.*

1st & 2nd BOOM SECTIONS

Starting Serial No. 8544556
Original Issue 5-85
Revised 6-25-99

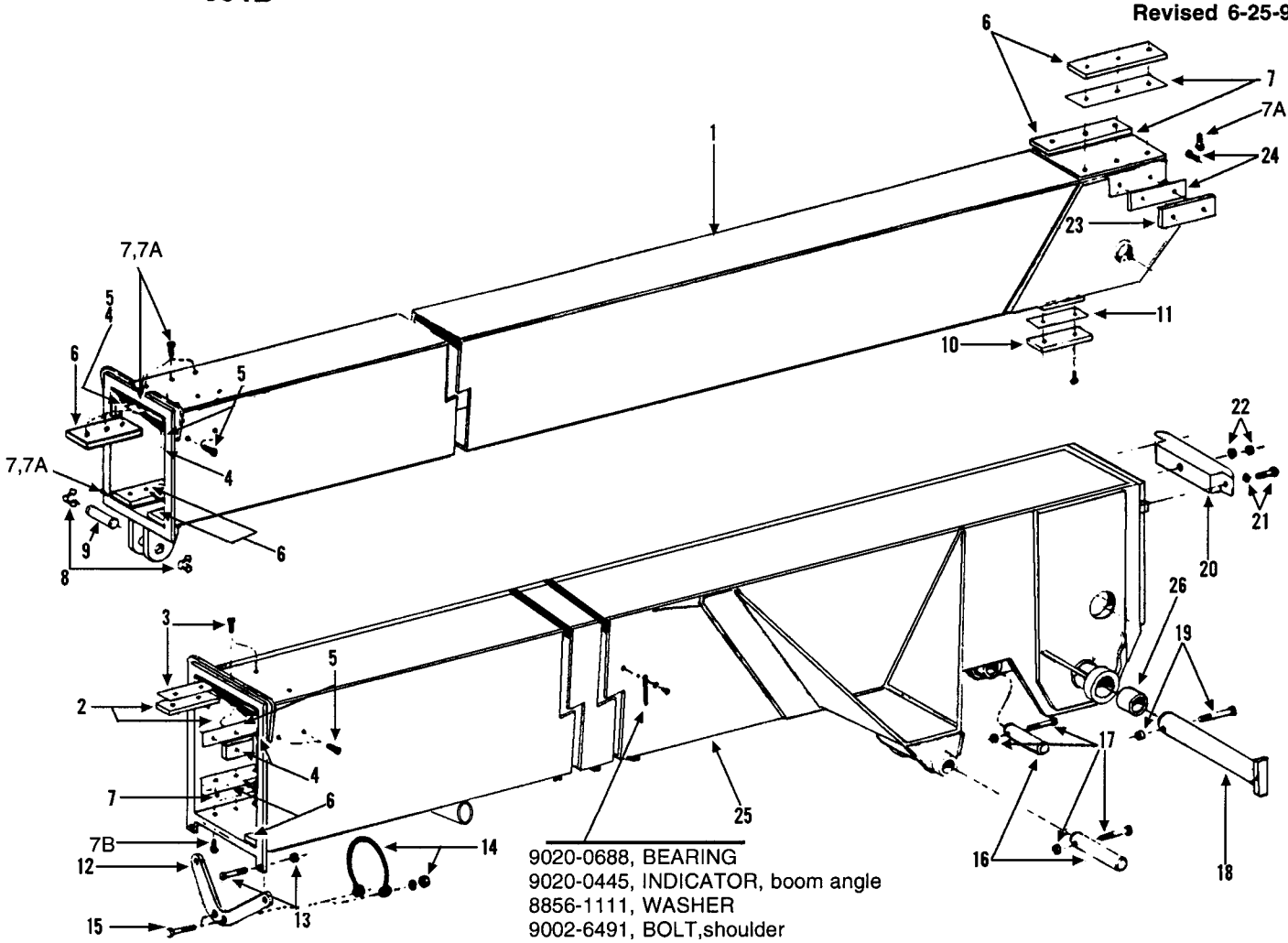

9020-0688, BEARING
9020-0445, INDICATOR, boom angle
8856-1111, WASHER
9002-6491, BOLT,shoulder

Item	Part No.	Qty.	Description Of Part
1	9103-6036	1	2ND BOOM SECTION, 3S BOOM
2	9020-5298	2	BEARING
3	9020-5870	2	SHIM
	8820-1035	4	HEX HD CAPSCREW 3/8-16x1
4	9020-6238	4	FRONT SIDE BEARING
5	9020-5870	AR	SHIM
	8820-1033	8	HEX HD CAPSCREW, 3/8-16x3/4
6	9040-2801	8	BEARING
7	9020-5497	AR	SHIM
7A	8820-1064	18	HEX HD CAPSCREW, 3/8-16x7/8
7B	8820-1068	6	HEX HD CAPSCREW, 3/8-16x1-3/4
	9020-3168	2	SAFTEY WIRE FOR 9002-8963 CAPSCREW
8	9002-8935	2	RETAINING RING
9	9020-7532	1	CROWD CYLINDER ROD END PIN
10	9020-6873	2	BEARING
11	9020-7029	AR	SHIM
	8820-1035	4	HEX HEAD CAPSCREW, 3/8-16x1
12	9040-3212	1	CROWD CYLINDER, HANGER
13	8820-1067	2	HEX HD CAPSCREW, 1/2-13x1-1/2
	8855-1013	2	LOCKWASHER, 1/2
	8850-1008	2	HEX NUT, 1/2-13
14	9020-7575	1	CYLINDER TIE DOWN CORD
15	8820-1008	2	HEX HD CAPSCREW, 1/4-20x1-3/4
	8856-1111	2	WASHER
	8850-1004	2	HEX NUT, 1/4-20

Item	Part No.	Qty.	Description Of Part
16	9020-6892	3	CROWD BASE AND LIFT ROD PIN
17	8820-1105	3	HEX HEAD CAPSCREW, 5/8-11x4
	8850-1010	3	HEX NUT, 5/8-11
18	9040-3280	1	BOOM BASE PIN
	8867-1001	1	GREASE FITTING
19	8348-1182	1	HEX HD CAPSCREW, 5/8-11x5-1/4 GR8
	8850-1010	1	HEX NUT, 5/8-11
20	9060-2842	1	STRONGBACK
21	8820-1069	1	HEX HD CAPSCREW, 1/2-13x2
	8540-1340	2	WASHER
22	9002-8965	1	HEX NUT, 1-8
	8850-1116	1	HEX JAM NUT, 1-8
23	9020-7027	2	BEARING
24	9020-7030	AR	SHIM
	8820-1033	4	HEX HD CAPSCREW, 3/8-16x3/4
25	9103-6035	1	1ST SECTION, 3S BOOM
26	9020-5482	2	BUSHING
	9103-1092	2	BUSHING, STARTING SERIAL 8444491 REPLACES 9020-5482 WHEN NEW STYLE PIN IS USED.

** Changed page number on second page of 3-1 from 3-1A to 3-1.*

3RD BOOM SECTION, PUSH BEAM & CABLE

Starting Serial No. 8344001L
Original Issue 3-88
Revised 6-25-99

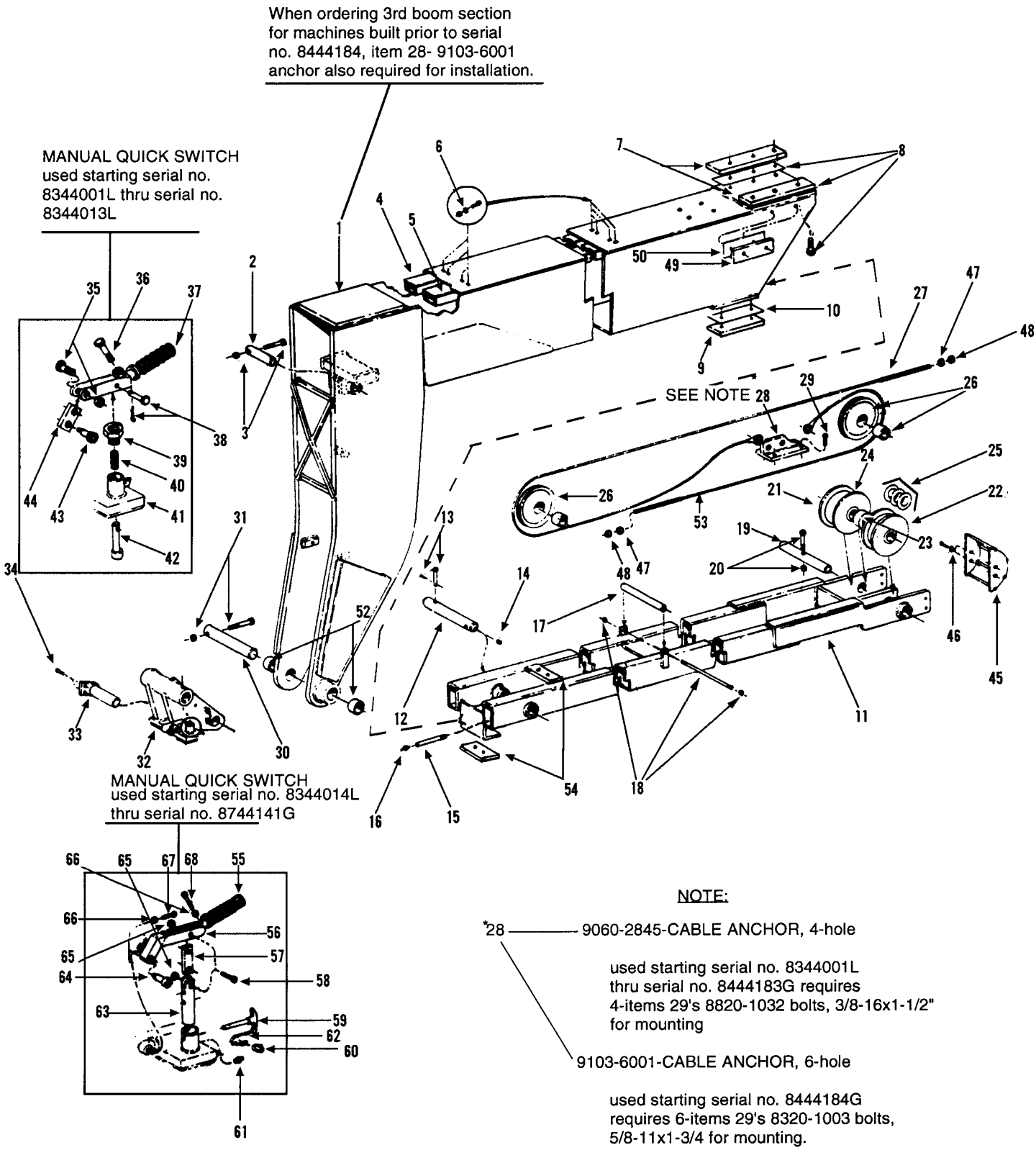

NOTE:

*28 ——— 9060-2845-CABLE ANCHOR, 4-hole

used starting serial no. 8344001L thru serial no. 8444183G requires 4-items 29's 8820-1032 bolts, 3/8-16x1-1/2" for mounting

9103-6001-CABLE ANCHOR, 6-hole

used starting serial no. 8444184G requires 6-items 29's 8320-1003 bolts, 5/8-11x1-3/4 for mounting.
This anchor required when ordering items 1 for earlier serial numbered machines.

3RD BOOM SECTION, PUSH BEAM & CABLE

Starting Serial No. 8344001L
Original Issue 3-88
Revised 6-25-99

Item	Part No.	Qty.	Description Of Part
1	9103-6037		3RD BOOM SECTION
2	9020-6892	1	TILT CYLINDER BASE PIN
3	8820-1105	1	HEX HD CAPSCREW, 5/8-11x4, GR5
	8850-1010	1	HEX NUT, 5/8-11
4	9040-3350	1	HOSE SUPPORT WELDMENT
5	9040-3203	1	HOSE SUPPORT WELDMENT
6	8850-1005	12	HEX NUT, 5/16-18
	8856-1108	12	FLAT WASHER, 5/16
7	9103-3190	2	BEARING (top rear)
8	9020-5497	4	SLOTTED SHIM
	9103-1237	4	PUNCHED HOLE SHIM
	8820-1564	6	HEX HD CAPSCREW, 1/2-20x1, GR5
	8856-1111	6	FLAT WASHER, 1/2
9	9103-3184	2	BEARING (lower rear)
10	9020-7030	4	SLOTTD SHIM
	9103-1235	4	PUNCHED HOLE SHIM
	8820-1536	4	HEX HD CAPSCREW, 3/8-24X1-1/2, GR5
	8856-1109	4	FLATWASHER, 3/8
11	9080-1349	1	PUSH BEAM
12	9020-7621	1	PIN
13	9002-1608	1	CLEVIS PIN
	8863-1310	1	COTTER PIN 3/32x1
14	8871-1284	1	HEX SOCKET PIPE PLUG, 3/4
15	8870-1035	1	NIPPLE, 1/8x12
16	9002-8740	1	GREASE FITTING
17	9020-7215	1	ROLLER (not required after serial no. 8444459)
18	9020-7302	1	STUD
	8852-1305	2	HEX LOCKNUT 5/16-18
19	9020-7710	1	PIN
20	8820-1045	1	HEX HD CAPSCREW, 3/8-16x3-1/2, GR5
	8850-1106	1	HEAVY HEX JAM NUT, 3/8-16
21	9104-3101	1	SHEAVE
22	9104-3100	1	SHEAVE
23	9020-6046	4	BUSHING
24	9020-7043	1	SPACER (if item 21 is not used)
25	9020-0253	AR	SHIM
	9020-3039	AR	SHIM
	9020-3040	AR	SHIM
26	9103-5147	2	SHEAVE ASSEMBLY (includes sheave and bushing)
	9103-1373	2	CABLE SHEAVE
	9103-1374	2	BUSHING
27	9020-6886	1	EXTEND CABLE (includes pins)
28		1	*SEE NOTE
29		-	SEE NOTE FOR ITEM 28
30	9104-1365	1	PIN (boom to male coupler)
31	8820-1107	1	HEX HD CAPSCREW, 5/8-11x5, GR5
	8852-1310	1	HEX LOCKNUT, 5/8-11
32	9060-2838	1	MALER COUPLER
33	9020-7046	1	TILT CYLINDER ROD PIN
34	8820-1065	2	HEX HD CAPSCREW, 1/2-13x1, GR5
35	8820-1069	1	HEX HD CAPSCREW, 1/2-13x2, GR5
	8852-1308	1	HEX LOCKNUT, 1/2-13
36	9040-3232	1	HANDLE ASSEMBLY
	8820-1068	1	HEX HD CAPSCREW, 1/2-13x1-3/4, GR5
37	9020-6976	1	HANDLE GRIP
38	9002-1561	1	CLEVIS PIN
	8863-1310	1	COTTER PIN 3/32x1
39	9020-6983	1	SPRING RETAINER
40	9020-6901	1	SPRING
41	9020-6906	1	OIL CUP
42	9020-7527	1	PLUNGER
43	8825-1036	1	SOCKET HD SHOULDER SCREW, 1/2x3/4(5/16-18 thread)
44	9020-6980	1	LINK
45	9040-3384	1	CABLE AND HOSE RETAINER
46	8820-1033	4	HEX HD CAPSCREW, 3/8-16x3/4 GR5
	8856-1109	4	FLAT WASHER, 3/8
47	9002-8965	2	NUT
48	8850-1116	2	HEAVY HEX JAM NUT 1-8
49	9103-3186	2	BEARING (side)
50	9020-5870	4	SLOTTED SHIM
	9103-1236	4	PUNCHED HOLE SHIM
51	8820-1532	4	HEX HD CAPSCREW, 3/8-24x3/4 GR5
	8856-1109	4	FLAT WASHER, 3/8
52	9103-1136	2	BUSHING
53	9020-6887	1	RETRACT CABLE (includes pin)
54	9103-3187	2	BEARING
	9103-1111	4	SLOTTED SHIM
	9103-1233	4	PUNCHED HOLE SHIM
54A	8820-1533	2	HEX HD CAPSCREW, 3/8-24x7/8 GR5
54B	8820-1532	2	HEX HD CAPSCREW, 3/8-24x3/4 GR5
	8856-1109	4	FLAT WASHER, 3/8
55	9020-6976	1	HANDLE GRIP
56	9060-2906	1	HANDLE WELDMENT
57	9020-7894	1	LINK
58	8820-1038	2	HEX HD CAPSCREW, 3/8-16x1-3/4 GR5
59	9020-7902	1	RELEASE PIN
60	9103-3039	1	CONNECTION LINK
61	8867-1008	1	LUBE FITTING- STRAIGHT 1/4-28
62	9020-3288	1	CHAIN
63	9040-3441	1	PLUNGER
64	8825-1037	1	SOCKET HD SHOULDER SCREW, 1/2x1 (3/8-16 thread)
66	8850-1104	2	HEAVY HEX JAM NUT, 1/4-20
67	8820-1003	1	HEX HD CAPSCREW, 1/4-20x3/4 GR5
68	8820-1007	1	HEX HD CAPSCREW, 1/4-20x1-1/2 GR5

*NOTE: When ordering items no. 7,9,49 & 54, bearings for machines prior to S/N 8544678, new mounting hardware must also be purchased to match with fine thread bearings.

NOTE:

*28—— 9060-2845-CABLE ANCHOR, 4-hole

used starting serial no. 8344001L thru serial no. 8444183G requires 4-items 29's 8820-1032 bolts, 3/8-16x1-1/2" for mounting

9103-6001-CABLE ANCHOR, 6-hole

used starting serial no. 8444184G requires 6-items 29's 8320-1003 bolts, 5/8-11x1-3/4 for mounting.
This anchor required when ordering item 1 for earlier serial numbered machines.

3RD BOOM SECTION, PUSH BEAM & CABLE

Starting Serial No. 8544556
Revised 6-25-99

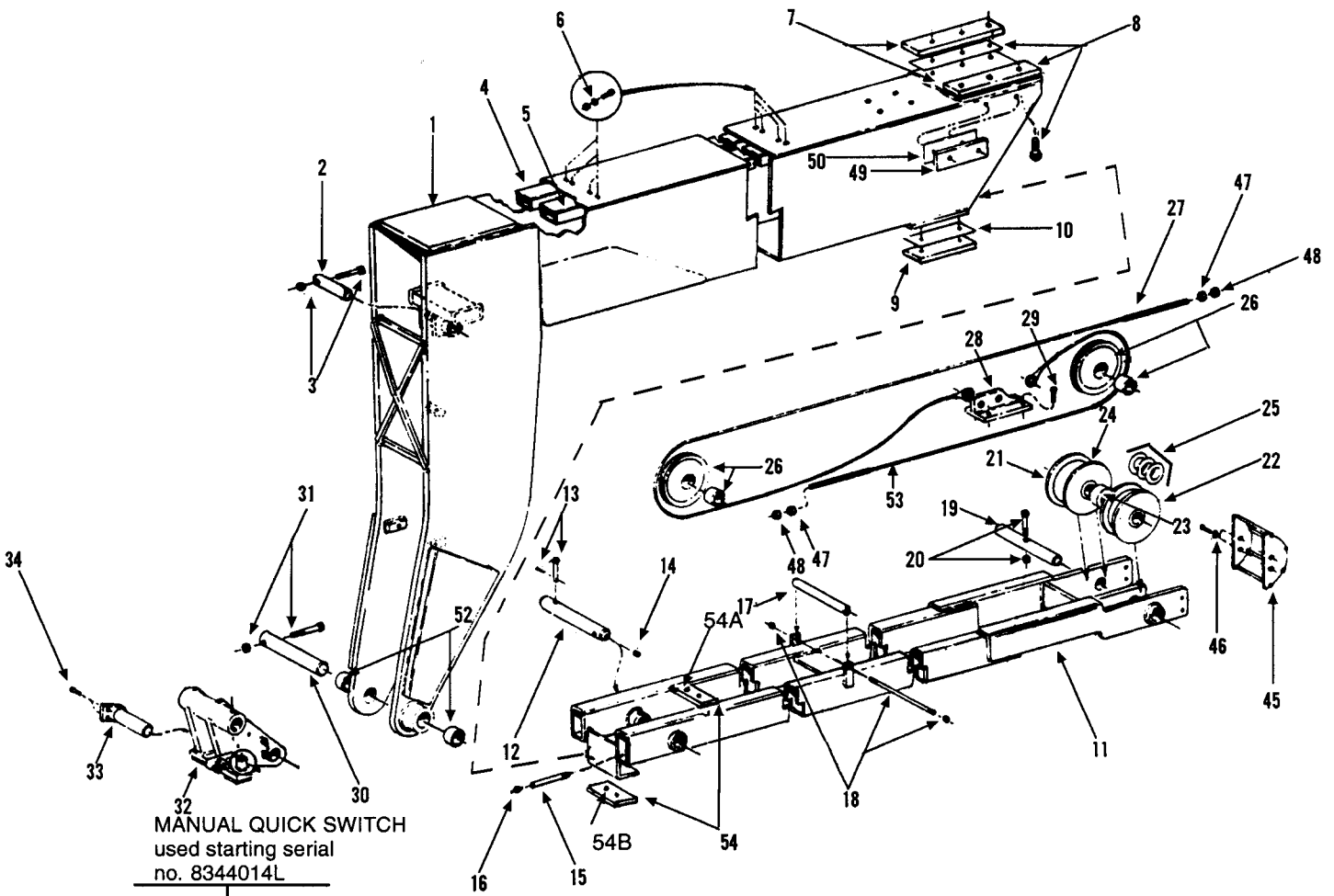

MANUAL QUICK SWITCH
used starting serial
no. 8344014L

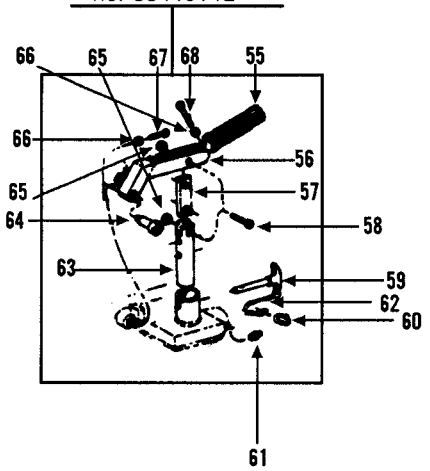

3RD BOOM SECTION, PUSH BEAM & CABLE

Starting Serial No. 8544556
Revised 6-25-99

Item	Part No.	Qty.	Description Of Part
1	9103-6037	1	3RD SECTION 3S BOOM
2	9020-6892	1	TILT CYLINDER BASE END PIN
3	8820-1105	1	5/8-11x4 HEX HD CAPSCREW
	8852-1310	1	5/8-11 LOCKNUT
* 4	9040-3050	1	HOSE SUPPORT WELDMENT
5	9040-3203	1	HOSE SUPPORT WELDMENT
6	7714-3006	6	5/16-18 WHIZ LOCK NUT
7	9103-3190	2	BEARING, top tear
8	9020-5497	4	SHIM, slotted
	9103-1237	4	SHIM, punched holes
	8820-1564	6	BOLT, 1/2x20-1"
	9002-1470	6	BEARING, tooth lock
9	9103-3184	2	BEARING, lower rear
10	9020-7030	4	SHIM, slotted
	9103-1235	4	SHIM, punched hole
	8820-1536	4	BOLT, 3/8-24x1 1/2
	9002-1469	4	WASHER, tooth lock
11	9080-1349	1	PUSH BEAM
12	9020-7621	1	FRONT PIN
13	9002-1608	1	CLEVIS PIN
	8863-1310	1	COTTER PIN
14	8871-1284	1	PLUG
15	9002-8941	1	GREASE TUBE
16	9002-8740	1	GREASE FITTING
	8852-1305	2	5/16-18 HEX NUT
19	9020-7710	1	REAR PIN
20	8820-1045	1	3/8-16x3-1/2 HEX HD CAPSCREW
	8850-1106	1	3/8-16 HEX JAM NUT
21	9060-2852	1	SHEAVE
22	9060-2830	1	SHEAVE
23	9020-6046	4	BUSHING
24	9020-7043	1	SPACER (IF ITEM 21, SHEAVE, IS NOT USED)
25	9020-0253	AR	WASHER
	9020-3039	AR	THRUST WASHER
	9020-3040	AR	THRUST WASHER
26	9040-3182	2	CABLE SHEAVE
	9020-5407	2	BUSHING
27	9020-6886	1	EXTEND CABLE (INCLUDES PINS)
28	9103-6001	1	CABLE ANCHOR
29	8320-1022		5/8-11x2-1/4 BOLT
	7714-1077	6	FLAT WASHER
30	9020-7042	1	BOOM TO MALE COUPLER PIN
31	8820-1107	1	5/8-11x5 HEX HD CAPSCREW
	8852-1310	1	5/8-11 HEX NUT
32	9060-2838	1	MALE COUPLER
33	9020-7046	1	TILT CYLINDER ROD END PIN
34	8820-1065	2	1/2-13x1 HEX HD CAPSCREW
45	9040-3384	1	CABLE AND HOSE RETAINER
46	8820-1033	4	3/8-16x3/4 HEX HD CAPSCREW
	8856-1109	4	WASHER
	8855-1011	4	LOCKWASHER
47	9002-8965	2	NUT
48	8850-1116	2	7/8-9 NUT

Item	Part No.	Qty.	Description Of Part
49	9103-3186	2	BEARING, side
50	9020-5870	4	SHIM, slotted
	9103-1236	4	SHIM, punched holes
51	8820-1532	4	BOLT, 3/8-24x3/4 (not shown-items 49)
	9002-1469	4	WASHERS, tooth lock
52	9020-5475	2	BUSHING
53	9020-6887	1	RETRACT CABLE, includes pin
54	9103-3187	2	BEARING
	9103-1111	4	SHIM, slotted
	9103-1233	4	SHIM, punched holes
54A	8820-1533	2	BOLT, 3/8-24x7/8
54B	8820-1532	2	BOLT, 3/8-24x3/4
	9002-1469	4	WASHERS, tooth lock
55	9020-6976	1	HANDLE GRIP
56	9060-2906	1	HANDLE WELDMENT
57	9020-7894	1	LINK
58	8820-1038	2	3/8-16x1-3/4 HEX HD CAPSCREW
59	9020-7902	1	RELEASE PIN
60	9103-3039	1	CONNECTION LINK
61	8867-1008	1	GREASE FITTING
62	9020-3288	1	CHAIN
63	9040-3441	1	PLUNGER
64	8825-1037	1	SHOULDER BOLT
65	8852-1306	2	3/8-16 LOCKNUT
66	8850-1104	2	1/4-20 LOCKNUT
67	8820-1003	1	1/4-20x3/4 HEX HD CAPSCREW
68	8820-1007	1	1/4-20x1-1/2 HEX HD CAPSCREW

3RD BOOM SECTION, PUSH BEAM & CABLE

Starting Serial No.8344014L
Revised 6-25-99

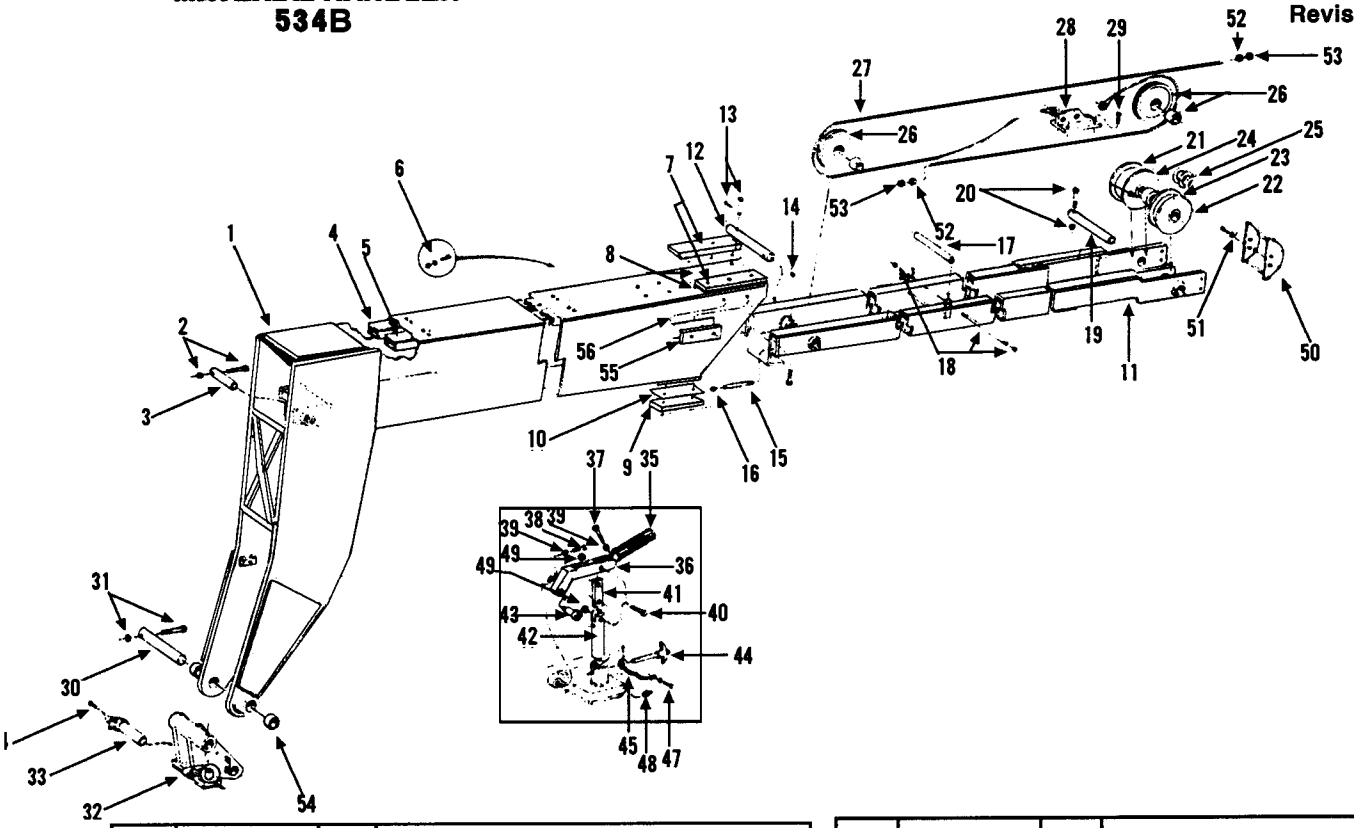

Item	Part No.	Qty.	Description Of Part
1	9080-1296	1	3S BOOM, 3rd section
2	9020-6892	1	PIN, tilt cylinder base end
3	9002-0199	1	CAPSCREW, hex hd 5/8-11x4
	9002-1101	1	NUT, hex 5/8-11
4	9040-3350	1	TUBE, auxilary hose
5	9040-3203	1	TUBE, tilt hose
6	9002-1095	12	NUT, hex 5/16-18
	9002-1455	12	WASHER
7	9040-2801	2	BEARING, rear top
8	9020-5497	AR	SHIM (use as required)
	9020-3167	6	BOLT, special
9	9020-7027	2	BEARING, rear lower
10	9020-7029	2	SHIM
	9020-0007	4	CAPSCREW, hex hd 3/8-16x1
11	9080-1349	1	BEAM, push
12	9020-7621	1	PIN, front
13	9020-1608	1	PIN, clevis
	9020-7221	1	PIN, cotter
14	9002-7264	1	PLUG
15	9002-8941	1	GREASE TUBE
16	9002-8740	1	FITTING, grease
17	9020-7215	1	ROLLER, hose support
18	9020-7302	1	STUD
	9002-2224	2	NUT, hex 5/16-18
19	9020-7710	1	PIN, rear
20	9002-0085	1	CAPSCREW, hex hd 3/8-16x3-1/2
	9002-1117	1	NUT, hex jam 3/8-16
21	9060-2852	1	SHEAVE
22	9060-2830	1	SHEAVE
23	9020-6046	4	BUSHING
24	9020-7043	1	SPACER, if item 21 is not used
25	9020-0253	AR	SHIM
	9020-3039	AR	SHIM
	9020-3040	AR	SHIM
26	9040-3182	2	CABLE SHEAVE
	9020-5407	2	NEEDLE BEARING

Item	Part No.	Qty.	Description Of Part
27	9020-6886	1	CABLE, includes pins
28	9060-2845	1	ANCHOR, cable
29	9002-0121	4	CAPSCREW, hex hd 3/8-16x1 1/2
30	9020-7042	1	PIN, boom to male coupler
31	9002-0219	1	CAPSCREW, hex head 5/8-11x5
	9002-1101	1	NUT, hex 5/8-11
32	9060-2838	1	COUPLER, male
33	9020-7046	1	PIN, tilt cylinder rod end
34	9002-9976	2	CAPSCREW, hex hd 1/2-13x1
35	9020-6976	1	GRIP, handle
36	9060-2906	1	HANDLE
37	9002-0017	1	CAPSCREW, hex hd 1/4-20x1 1/2
38	9002-0009	1	CAPSCREW, hex hd 1/4-20x1 1/4
39	9002-1113	2	NUT, 1/4-20
40	9002-0021	2	CAPSCREW, hex hd 3/8-16x1 1/2
41	9020-7894	1	LINK
42	9040-3441	1	PLUNGER
43	9002-6523	1	BOLT, shoulder
44	9020-7902	1	HANDLE
45	9020-3288	1	WELDMENT, chain
47	9002-9976	1	CAPSCREW, hex hd 1/2-13x1
	9002-7471	1	WASHER, 1/2
48	9002-2218	1	FITTING, grease
49	9002-2225	2	NUT, 3/8-16
50	9040-3384	1	RETAINER, cable and hose
51	9002-6019	4	CAPSCREW, hex hd 3/8-16x3/4
	9002-1456	4	WASHER, 3/8
52	9002-8965	2	NUT, cable end
53	9002-1203	2	NUT, cable end jam
54	9020-5475	2	BUSHING
55	9020-6238	2	BEARING, top side
56	9020-5870	AR	SHIM
	9002-6019	4	BOLT, 3/8-16x3/4

(9104-5006) QUICK SWITCH ASSEMBLY

Starting Serial No. 8744142G
Original Issue 8-87
Revised 6-25-99

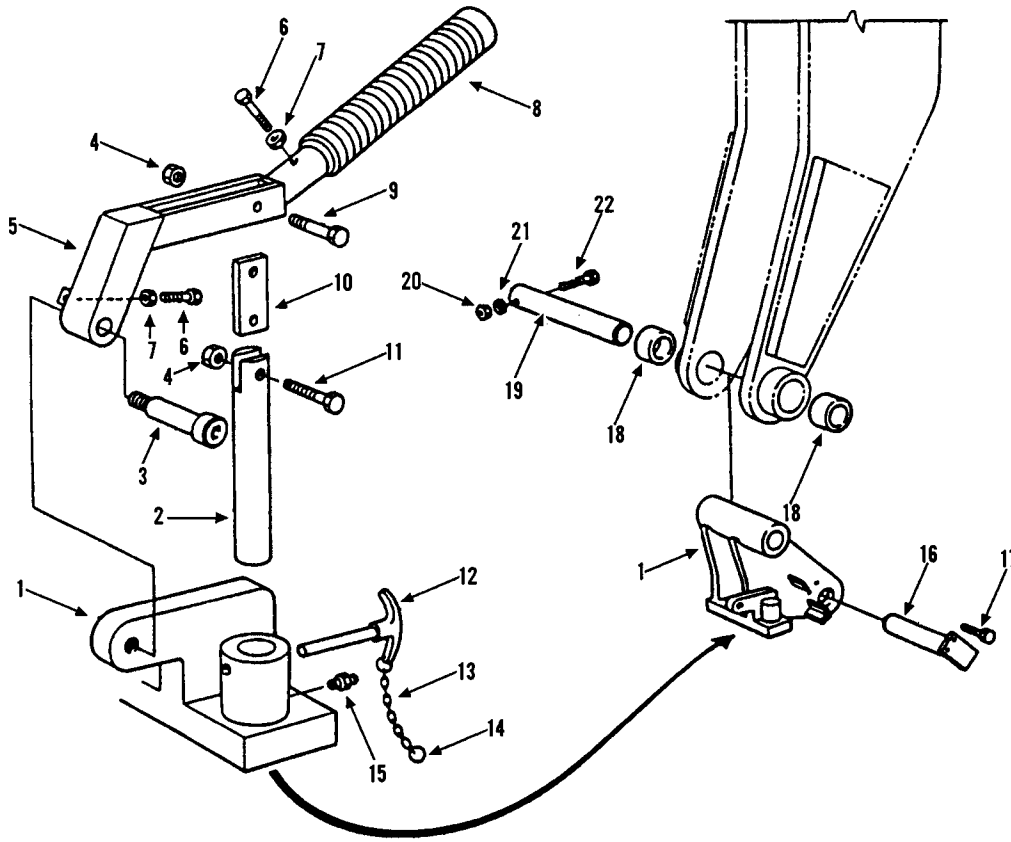

Item	Part No.	Qty.	Description Of Part
	9104-5006	1	QUICK SWITCH ASSY (includes all items except items 16 thru 22)
1	9104-6027	1	QUICK SWITCH WELDMENT
2	9104-1091	1	PLUNGER
3	8825-1037	1	SOCKET HD SHOULDER SCREW, 1/2x1 (3/8-16 THREAD)
4	8852-1306	2	HEX LOCKNUT, 3/8-16
5	9060-2906	1	HANDLE WELDMENT
6	8820-1005	2	HEX HD CAPSCREW, 1/4-20x1,GR5
7	8850-1104	2	HEX NUT, 1/4-20
8	9020-6976	1	HANDLE GRIP
9	8820-1037	1	HEX HD CAPSCREW, 3/8-16x1-1/2, GR5
10	9020-7894	1	LINK
11	8820-1038	1	HEX HD CAPSCREW, 3/8-16x1-3/4, GR5
12	9020-7902	1	QUICK RELEASE PIN
13	9103-3038	1	JACK CHAIN, 8" LONG, SIZE 12
14	9103-3039	1	CHAIN CONNECTION
15	8867-1008	1	LUBE FITTING, STRAIGHT, 1/4-28
16	9020-7046	1	TILT CYLINDER ROD END PIN
17	8820-1065	2	HEX HD CAPSCREW, 1/2-13x1, GR5
18	9103-1136	2	BUSHING
19	9104-1365	1	HEAD PIN
20	8852-1010	1	HEX LOCKNUT, 5/8-11
21	8855-1013	2	LOCKWASHER, 1/2
22	8664-1057	1	HEX HD CAPSCREW

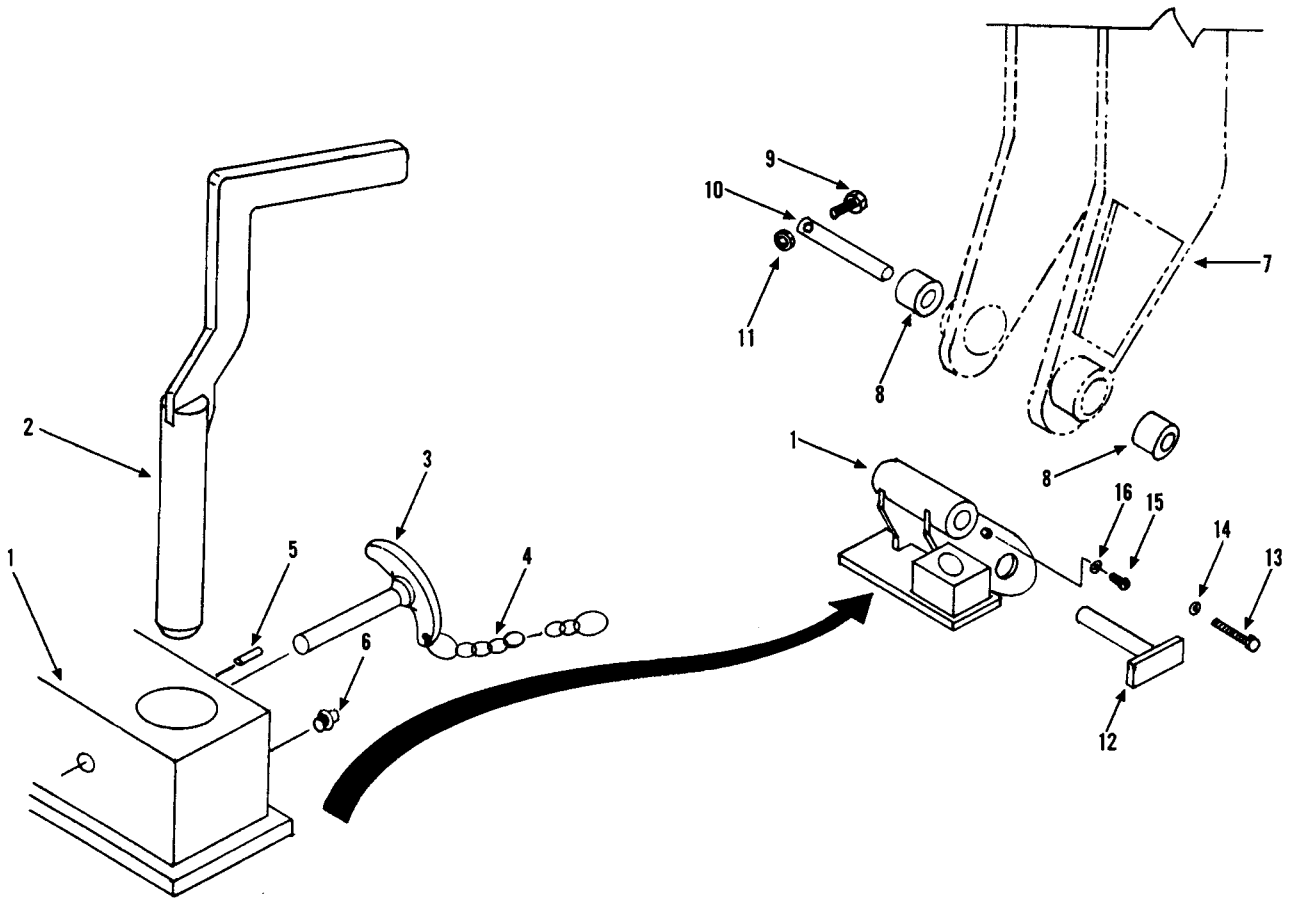

Item	Part No.	Qty.	Description Of Part
	9104-5095	1	QUICK SWITCH ASSEMBLY
1	9104-6074	1	QUICK SWITCH WELDMENT
2	9108-6073	1	PLUNGER WELDMENT
3	9020-7902	1	QUICK RELEASE PIN
4	9103-3038	1	JACK CHAIN,8" LONG, SIZE 12
5	8863-1509	1	ROLL PIN, 1/4"x2
6	8867-1008	1	LUBE FITTING, STRAIGHT, 1/4-28
7	9104-6020	REF	FOURTH BOOM SECTION WELDMENT
8	9103-1136	REF	BUSHING
9	8864-1057	1	HEX HD CAPSCREW
10	9104-1365	1	HEAD PIN
11	8852-1010	1	HEX LOCKNUT, 5/8-11
12	9020-7046	1	TILT CYLINDER ROD END PIN
13	8820-1065	2	HEX HD CAPSCREW, 1/2-13x1, GR5
14	8855-1013	2	LOCKWASHER, 1/2
15	8830-1090	1	RD. HD MACH SCREW #10-24x1/2
16	8856-1105	1	FLAT WASHER #10

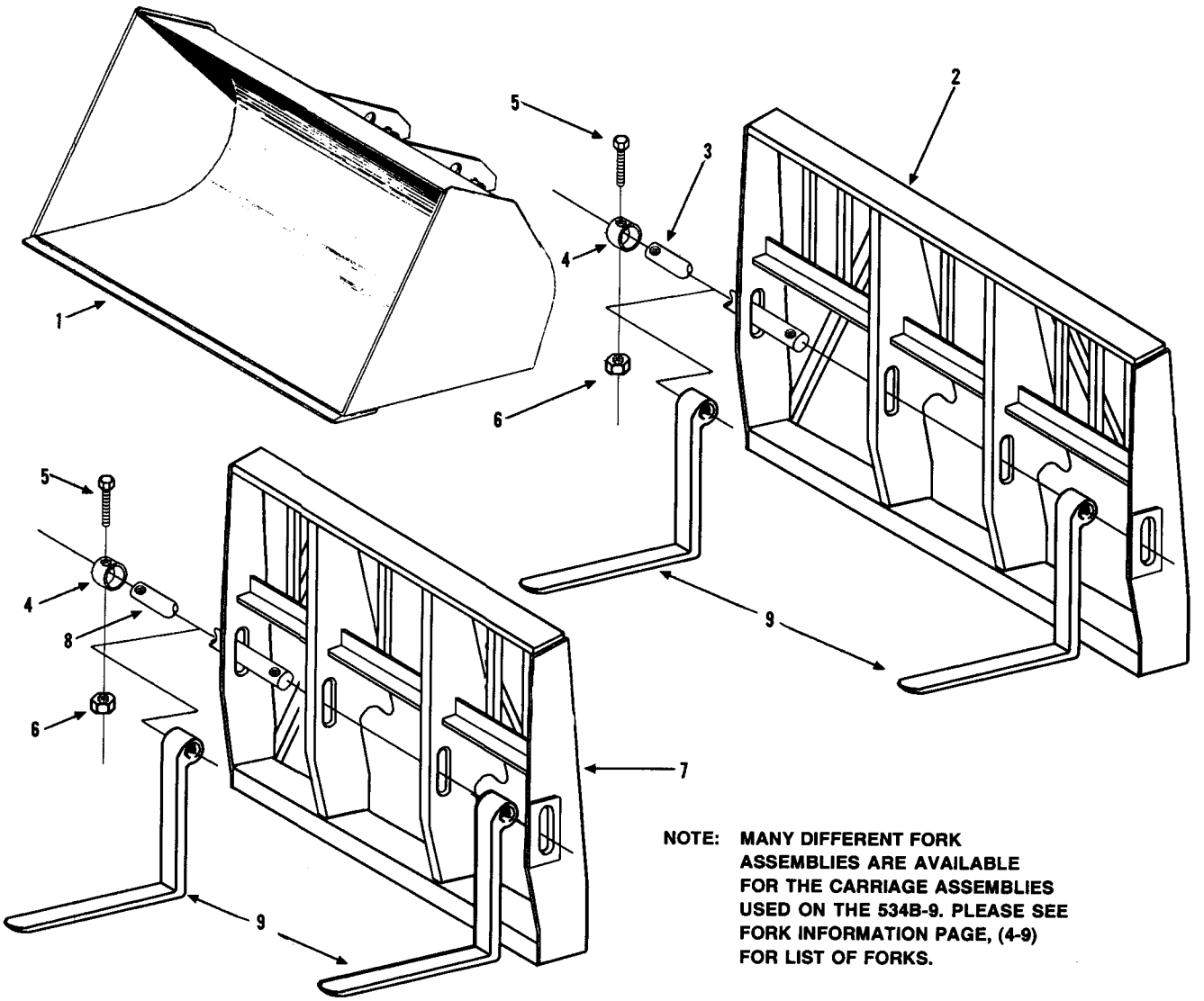

NOTE: MANY DIFFERENT FORK ASSEMBLIES ARE AVAILABLE FOR THE CARRIAGE ASSEMBLIES USED ON THE 534B-9. PLEASE SEE FORK INFORMATION PAGE, (4-9) FOR LIST OF FORKS.

Item	Part No.	Qty.	Description Of Part
* 1	9045-5049	1	60" BUCKET
2	9080-1314	1	66" CARRIAGE
3	9040-2478	1	66" FORK PIN
4	9020-0003	2	FORK PIN COLLAR
5	8820-1105	2	HEX HD CAPSCREW, 5/8-11X4, GR5
6	8852-1310	2	HEX LOCKNUT, 5/8-11
7	9080-1315	1	48" CARRIAGE
8	9040-2477	1	48" FORK PIN
9	9080-2132	2	PALLET FORK, 1-3/4X5X42 6000# CAPACITY
	9080-2221	2	PALLET FORK, 2X4X48 6000# CAPACITY
	9080-2164	2	PALLET FORK, 1-3/4X5X60 6000# CAPACITY
	9060-0390	2	CUBING FORK, 2X2X50 3000# CAPACITY (USES 2 9041-0246 SPACERS)
	9060-1819	2	PALLET FORK, 1-3/4X6X48 8000# CAPACITY
	9060-1818	2	PALLET FORK, 2X6X60 8000# CAPACITY
	9045-3002	2	PALLET FORK, 2X4X48 8000# CAPACITY

** Revised item 1.*

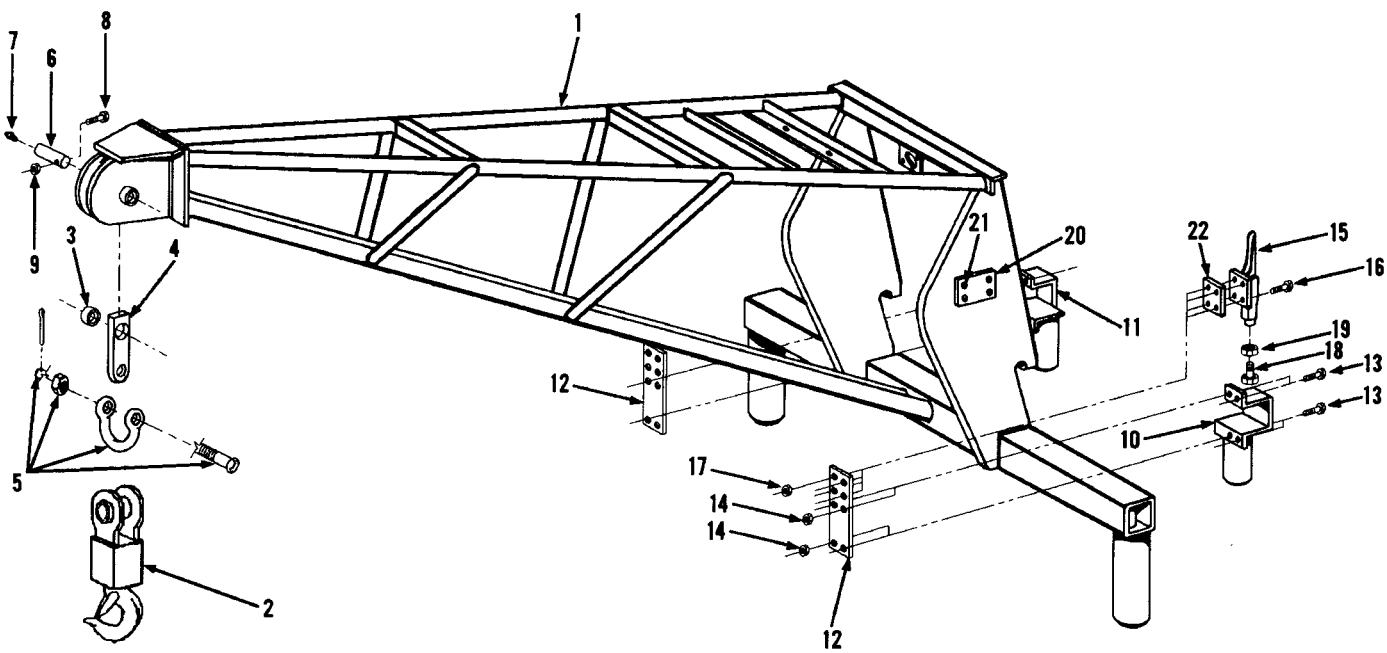

Item	Part No.	Qty.	Description Of Part
	9045-5011	1	TRUSS BOOM, (includes all items)
1	9080-1353	1	TRUSS BOOM WELDMENT
2	9045-3040	1	SWIVEL HOOK
3	9020-6046	1	BUSHING
4	9045-1053	1	HANGER
5	9045-3041	1	SHACKLE, (includes attachment hardware)
		1	BOLT
		1	NUT
		1	COTTER PIN
6	9040-2948	1	PIN
7	8867-1001	1	LUBE FITTING, STRAIGHT, 1/8
8	8820-1073	1	HEX HD CAPSCREW, 1/2-13X3, GR5
9	8850-1008	1	HEX NUT, 1/2-13
10	9060-2905	1	SLIDER BRACKET

Item	Part No.	Qty.	Description Of Part
11	9060-2904	1	SLIDER BRACKET
12	9040-3437	2	SLIDER BAR
13	8820-1036	8	HEX HD CAPSCREW, 3/8-16X1-1/4, GR5
14	8850-1006	8	HEX NUT, 3/8-16
15	9020-7884	2	LOCKING CLAMP
16	8820-1021	8	HEX HD CAPSCREW, 5/16-18X1-1/4, GR5
17	8850-1005	8	HEX NUT, 5/16-18
18	8820-1035	2	HEX HD CAPSCREW, 3/8-16X1, GR5
19	8850-1106	2	HEAVY HEX JAM NUT, 3/8-16
20	9015-3001	1	SERIAL NO. PLATE
21	8834-1022	4	DRIVE SCREW, #10X3/8
22	9045-1047	2	SPACER

WINCH-TRUSS BOOM

Starting Serial No. 8344001L
Revised 8-25-06

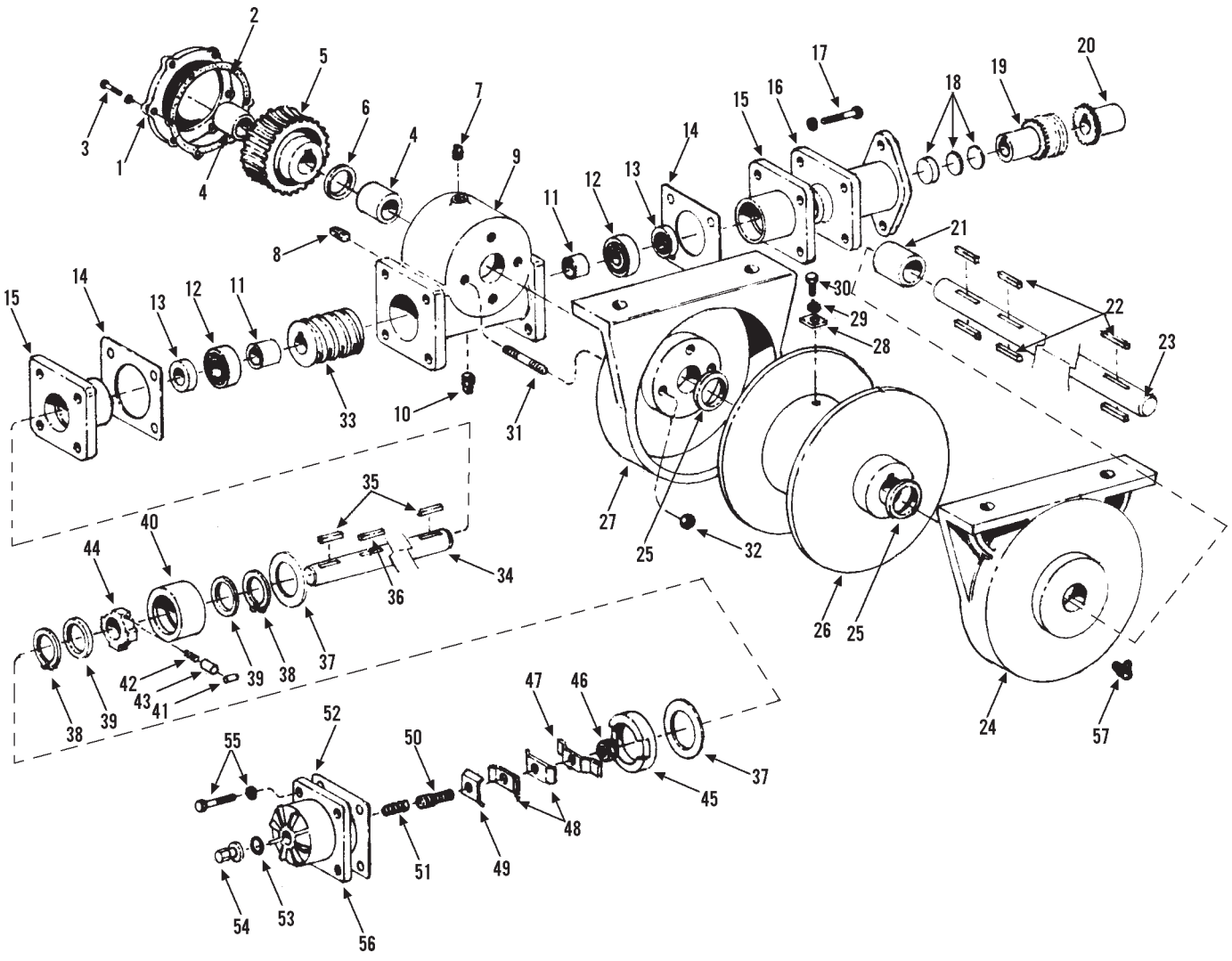

Item	Part No.	Qty.	Description Of Part
	9020-7878	1	TRUSS BOOM WINCH (includes all items)
1	9020-8147	1	GEAR CASE COVER
2	9020-8171	1	GEAR CASE GASKET
3	8820-1035	6	HEX HD CAPSCREW, 3/8-16x1, GR.5
4	9020-8154	2	BUSHING
5	9020-8150	1	WORM GEAR
6	9020-8174	1	BUSHING
7	9020-8168	1	OIL FILL PLUG
8	9020-8185	1	OIL LEVEL PLUG
9	9020-8142	1	GEAR CASE
10	9020-8186	1	OIL DRAIN PLUG
11	9020-8156	2	COLLAR
12	9020-8183	2	BEARING
13	9020-8189	2	OIL SEAL
14	9020-8170	2	BEARING HUB GASKET
15	9020-8188	2	BEARING HUB
16	9020-8180	1	MOTOR MOUNT ADAPTER
17	8820-1037	4	HEX HD CAPSCREW, 3/8-16x1-1/2 GR.5
	8855-1011	4	LOCK WASHER, 3/8
18	9020-8187	AR	COUPLER SPACER
19	9020-8181	1	COUPLER WINCH SHAFT
20	9020-8182	1	COUPLER MOTOR SHAFT
21	9020-8153	1	LOCK SEAT BUSHING
22	9020-8152	6	CABLE DRUM SHAFT KEY
23	9020-8148	1	CABLE DRUM SHAFT
* 24	9140-4384	1	LOCK SEAT
25	9020-8173	2	WASHER
26	9020-8145	1	CABLE DRUM
27	9020-8143	1	LOCK SEAT
28	9020-8169	1	WIRE ROPE LOCK
29	8855-1011	1	LOCKWASHER, 3/8
30	8820-1036	1	HEX HD CAPSCREW, 3/8-16x1-1/4 GR.5
31	9020-8155	4	STUD BOLT, 1/2-13x1-1/2
32	8850-1008	4	HEX NUT, 1/2-13
33	9020-8151	1	WORM
34	9020-8149	1	WORM SHAFT
35	9020-8176	2	WORM SHAFT KEY
36	9020-8177	1	WORM SHAFT KEY
37	9020-8164	2	BRAKE LINING
38	9020-8184	2	LOCK RING (V.C. type)
39	9020-8175	2	SEAL
40	9020-8158	1	BRAKE HOUSING
41	9020-8163	1	ROLLER
42	9020-8179	1	BRAKE DRUM SPRING
43	9020-8162	1	SPRING SEAT
44	9020-8159	1	BRAKE DRUM
45	9020-8157	1	BRAKE PLATE
46	8850-1006	1	HEX NUT, 3/8-16
47	9020-8165	1	BRAKE PLATE
48	9020-8166	2	BRAKE PLATE
49	9020-8167	1	FIXING PLATE
50	9020-8160	1	ADJUSTING BOLT
51	9020-8178	1	SPRING
52	9020-8190	1	BRAKE COVER GASKET
53	9020-8172	1	O-RING
54	9020-8161	1	ADJUSTING NUT
55	8820-1037	8	HEX HD CAPSCREW, 3/8-16x1-1/2 GR.5
	8855-1011	4	LOCKWASHER, 3/8
56	9020-8146	1	BRAKE DRUM
57	8867-1001		LUBE FITTING - STRAIGHT 1/8

** Changed part number on item 24.*

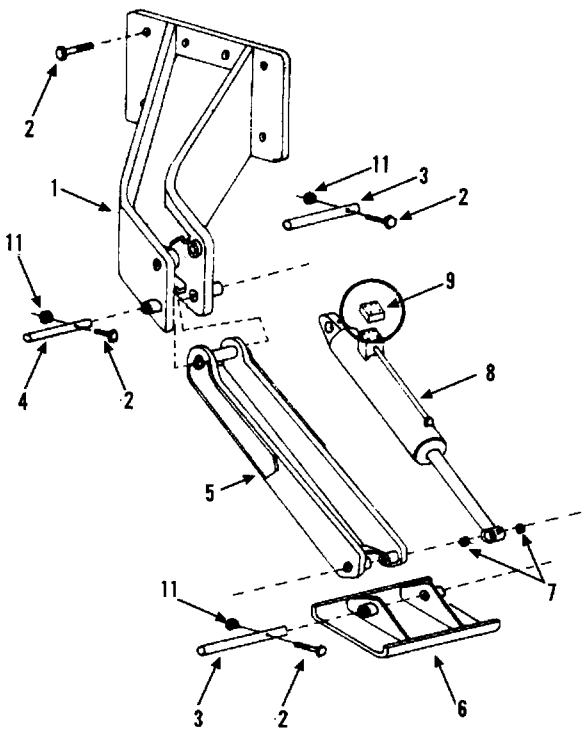

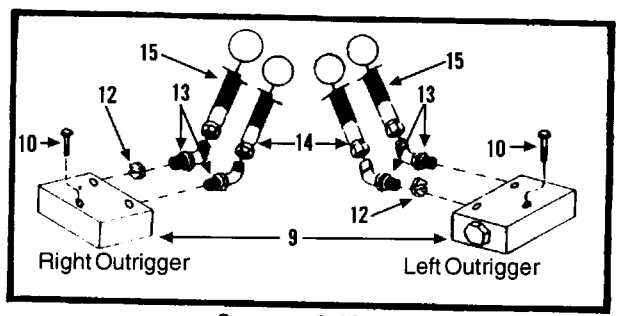

See page 9-12

Item	Part No.	Qty.	Description Of Part
1	9103-6029	1	LEFT OUTRIGGER BRACKET
	9103-6030	1	RIGHT OUTRIGGER BRACKET
2	8508-1016	11	HEX HD CAPSCREW
	0510-1441	11	SPECIAL WASHER
3	9103-1141	4	SHOE PIN
4	9103-1140	2	ARM PIN
5	9103-6041	2	ARM WELDMENT
6	9103-6032	2	OUTRIGGER SHOE
7	9103-1136	4	BUSHING
* 8		Ref	CYLINDER, (see page 13-11 for details)
9	9104-3258	2	DUAL P.O. CHECK, (see page 10-24 for details)
10	8820-1040	6	HEX HD CAPSCREW, 3/8-16X2-1/4 GR.5
	8855-1011	6	LOCKWASHER, 3/8
*11	8852-1206	6	HEX LOCKNUT, 3/8-16
12	9103-3201	2	ORIFICE CHECK, (barrel side only)
13	8866-2085	4	ELBOW, 45 DEGREES, (includes o-ring)
	8859-1205	4	O-RING
14	8471-7527	2	HOSE ASSY
15	8471-7528	2	HOSE ASSY

** Revised description on items 8 & 11.*

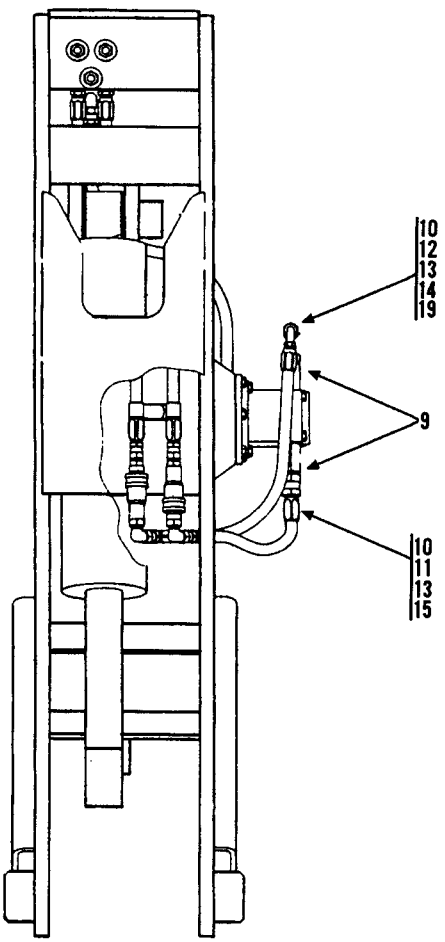
10
12
13
14
19
9
10
11
13
15

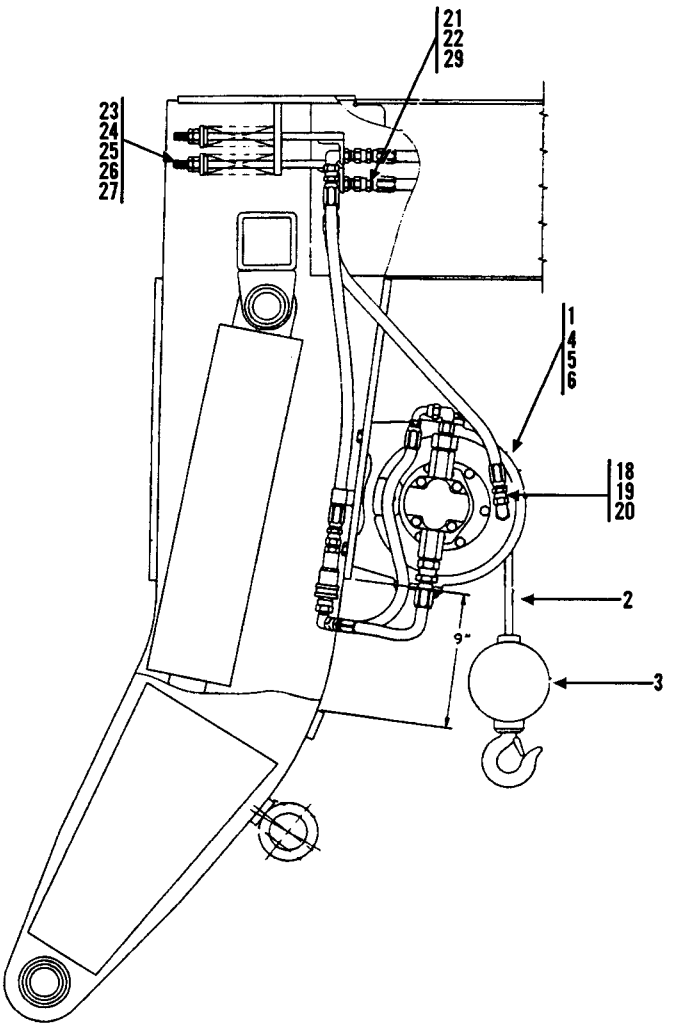
21
22
29
23
24
25
26
27
1
4
5
6
18
19
20
2
9"
3

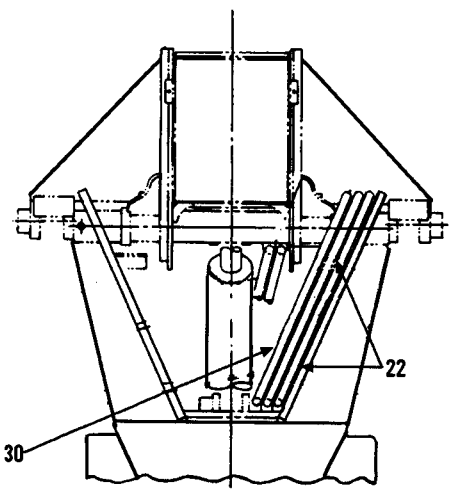
22
30

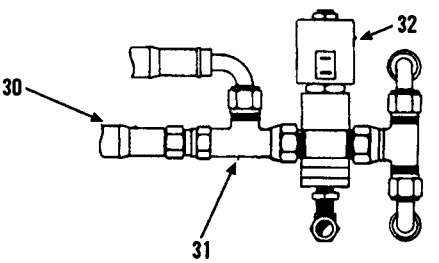
32
30
31

Item	Part No.	Qty.	Description Of Part
1	9103-3196	1	WINCH
2	9020-7882	1	CABLE
3	9020-1443	1	HOOK & BALL
4	8820-1069	4	HEX HD CAPSCREW, 1/2-13x2, GR5
5	8855-1013	4	LOCKWASHER, 1/2
6	8850-1008	4	HEX NUT, 1/2-13
7	9103-1007	1	BAR (not shown)
8	9102-1009	1	RING (not shown)
9	9103-3161	2	FLOW REGULATOR
10	8866-1113	2	MALE ELBOW - 90 DEGREES 1/2x1/2 TUBE
11	9020-4245	1	HYDRAULIC COUPLER - FEMALE
12	9020-4244	1	HYDRAULIC COUPLER - MALE
13	9103-3230	2	REDUCER
14	7713-3226	1	HOSE ASSEMBLY
15	7713-3459	1	HOSE ASSEMBLY
16	9104-3126	1	DUST CAP (not shown)
17	9104-3125	1	DUST PLUG (not shown)
18	8866-1011	1	MALE CONNECTOR 1/4x1/2 TUBE
19	8866-2106	2	ELBOW - 90 DEGREES (swivel nut)
20	8471-7252	1	HOSE ASSEMBLY
21	9002-7180	1	90 DEGREES BULKHEAD FITTING
22	9020-6888	1	HOSE ASSEMBLY
23	9040-3249	1	HOSE TAKE-UP
24	9020-0313	1	SPRING
25	9020-7041	1	SPRING RETAINER
26	8850-1008	1	HEX NUT, 1/2-13
27	8850-1108	1	HEAVY HEX JAM NUT, 1/2-13
28	9104-3101	1	HOSE TAKE-UP SHEAVE
29	8866-1065	1	UNION, 1/2 TUBE
30	8471-6377	1	HOSE ASSEMBLY
31	8866-2240	1	SWIVEL NUT RUN TEE, 1/2 TUBE
32	9103-5067	1	SOLENOID VALVE ASSEMBLY

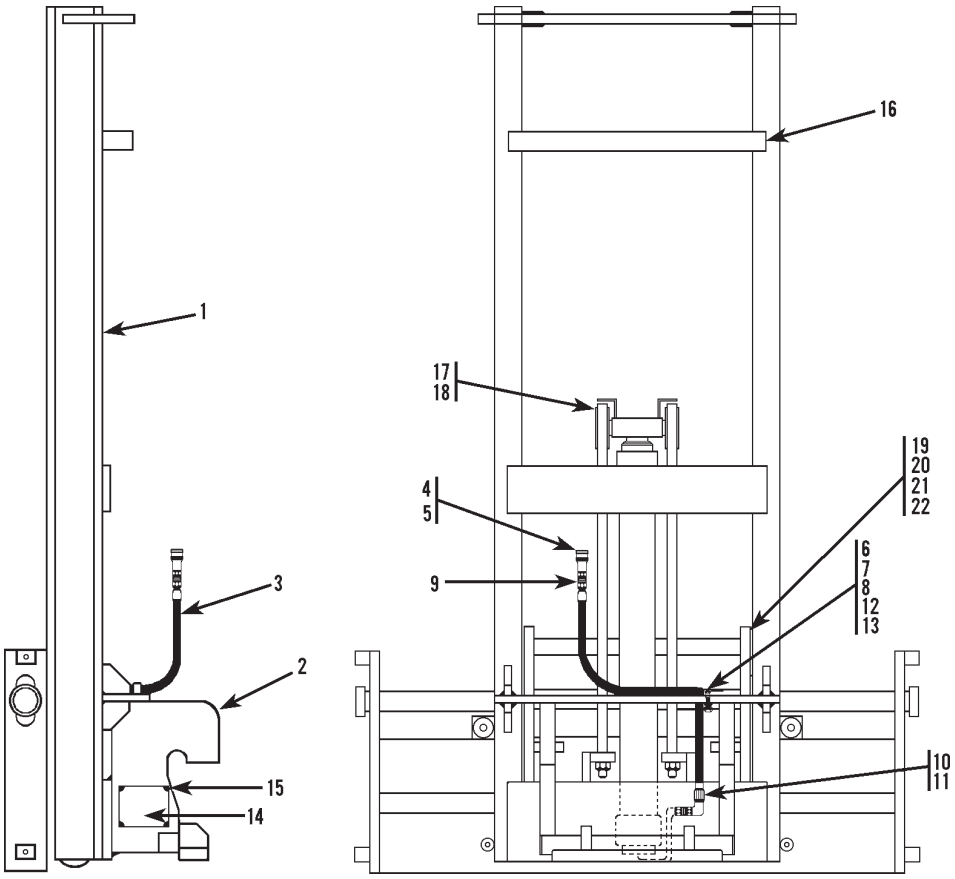

Item	Part No.	Qty.	Description Of Part
	9045-5035	1	6 FT. MAST ASSY, (48" carriage), (includes all items)
	9045-5037	1	6 FT. MAST ASSY, (66" carriage), (includes all items)
	9103-3243	1	6K CAPACITY CHART, (located in cab)
	9103-3242	1	8K CAPACITY CHART, (located in cab)
1	9045-3031	1	CARRIAGE WELDMENT - 48"
	9045-3032	1	CARRIAGE WELDMENT - 66"
2	9045-6002	1	ADAPTER WELDMENT
3	8471-7640	1	HOSE ASSY
4	9116-3138	1	MALE HYDRAULIC COUPLING, **(Before S/N 2005283-01)**
	9140-3414	1	MALE HYDRAULIC COUPLING, **(S/N 2005283-01 & After)**
5	9104-3126	1	DUST CAP
6	2443-1386	2	CLAMP
7	8820-1037	2	HEX HD CAPSCREW, 3/8-16X1-1/2, GR5
8	8856-1004	2	FLAT WASHER, 3/8

Item	Part No.	Qty.	Description Of Part
9	8866-1013	1	MALE CONNECTOR, 1/2X1/2 TUBE, **(Before S/N 2005283-01)**
	8866-2006	1	CONNECTOR, (includes 8859-1205 o-ring), **(S/N 2005283-01 & After)**
10	8866-1016	1	MALE CONNECTOR, 5/8X1/2 TUBE
11	8866-1180	1	FEMALE ELBOW, 90 DEGREES, 1/2X1/2 TUBE
12	8850-1006	2	HEX NUT, 3/8-16
13	8855-1011	2	LOCKWASHER, 3/8
14	9015-3001	1	SERIAL NO. PLATE
15	8834-1022	4	DRIVE SCREW, #10X3/8
16	9045-1039	1	STOP TUBE
17	9103-4372	2	RETAINING RING
18	9103-4373	2	CHAIN ROLLER
19	9103-4374	6	LOAD ROLLER, (inside carriage frame)
20	9103-4375	AR	SHIM
21	9103-4376	4	SIDE THRUST ROLLER, (small outside roller)
22	9103-4377	2	SCREW

GLOW PLUG INSTALLATION

Original Issue 8-86
Revised 6-25-99

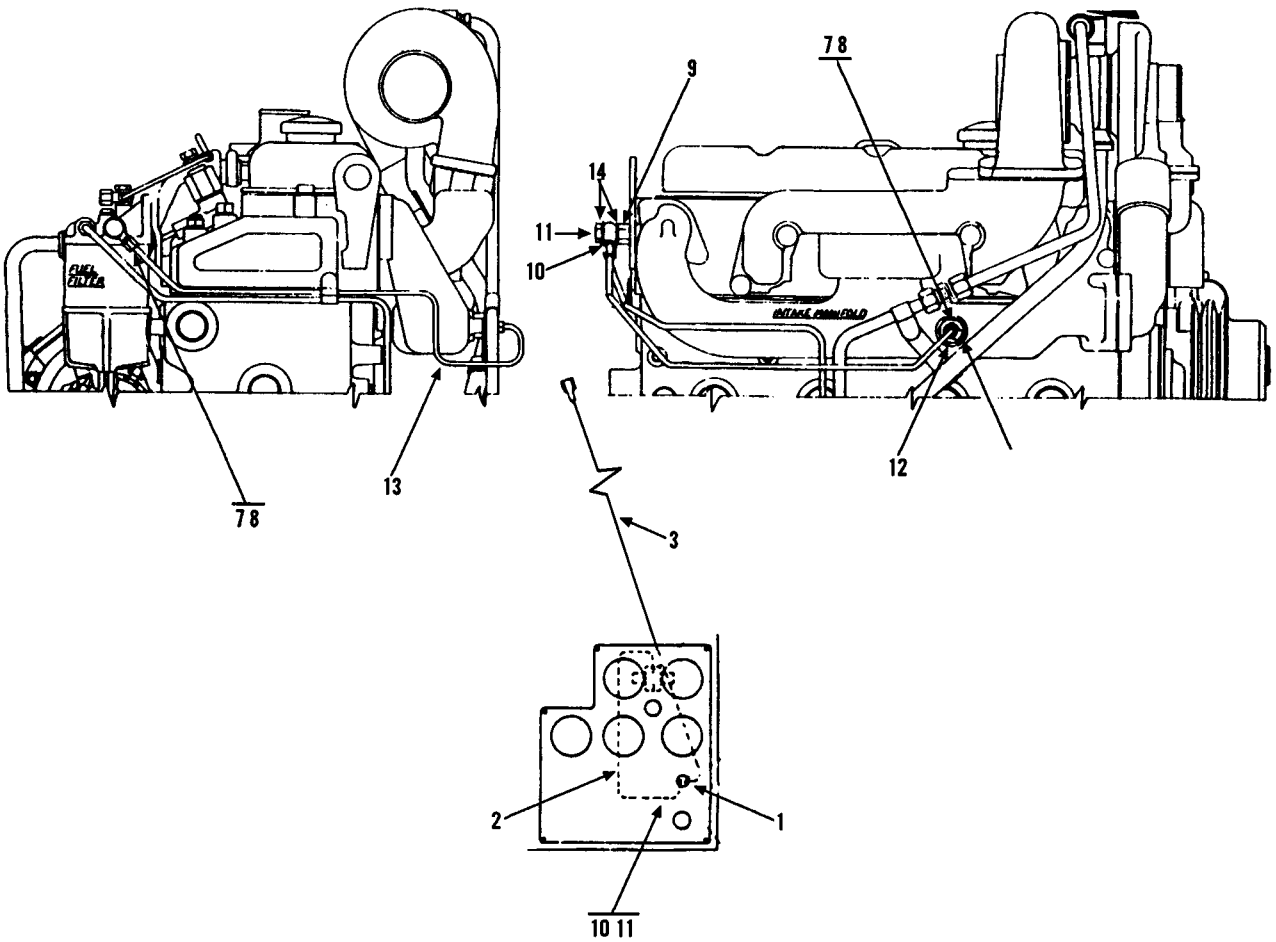

Item	Part No.	Qty.	Description Of Part
	9103-5105		GLOW PLUG INSTALLATION (includes all items below)
1	2477-1004	1	PUSH BUTTON SWITCH
2	9103-1277	1	JUMPER WIRE
3	9103-1278	1	JUMPER WIRE
4	9103-3251	1	BUTTON DECAL
5	9103-3252	1	INSTRUCTION DECAL
6	9103-3250	1	GLOW PLUG KIT (consists of items 7 thru 14)
7		2	TUBE NUT
8		2	RUBBER FERRULE
9		1	VALVE
10		1	CONNECTOR
11		1	BOLT
12		1	HEATER
13		1	TUBE
14		3	WASHER
			*NOTE: Only items with part numbers are available for service.
			*NOTE: Switch assembly, switch plate, and decal sheet, which are part of the above kit, are not used in this installation.

** Changed the page number from 4-8 to 4-7*

PINTLE HOOK INSTALLATION

Original Issue 8-86
Revised 6-25-99

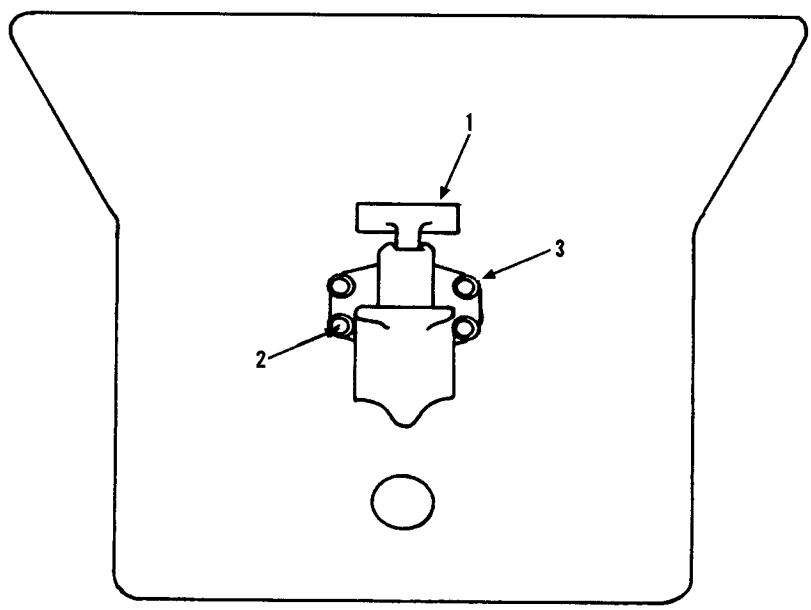

Item	Part No.	Qty.	Description Of Part
1	9020-0602	1	PINTLE HOOK
2	8820-1068	4	HEX HD CAPSCREW, 1/2-13x1-3/4, GR.5
3	8855-1013	4	LOCKWASHER 1/2

** Changed the page number from 4-9 to 4-8*

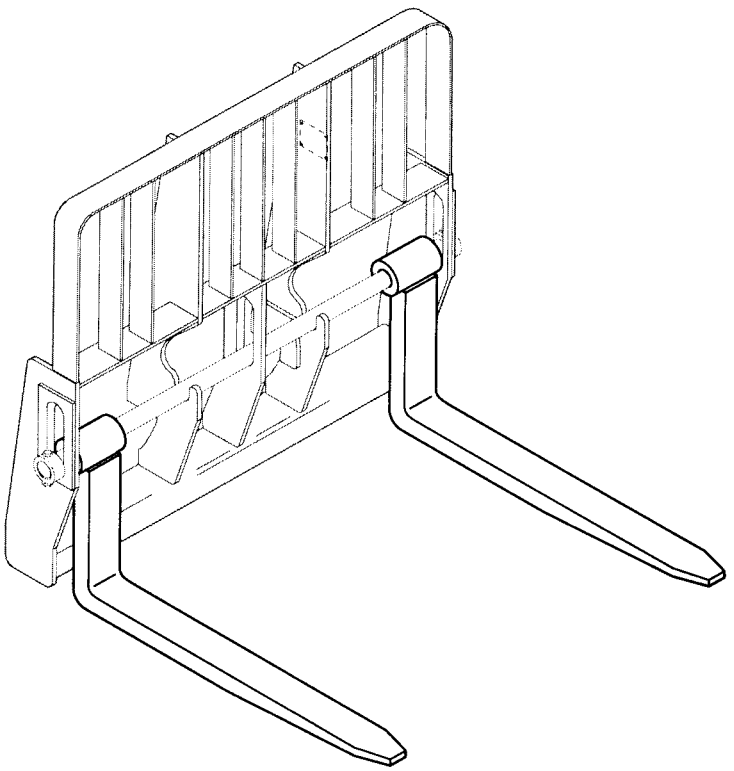

NOTE: FORKS RATED LESS THAN THE ATTACHMENT OR MACHINE'S CAPACITY DECREASE CAPACITY OF THE ATTACHMENT OR MACHINE TO THAT OF THE FORKS. FORKS RATED MORE THAN THE ATTACHMENT OR MACHINE'S CAPACITY DO NOT INCREASE ATTACHMENT OR MACHINE'S CAPACITY.

NOTE: PLEASE CONSULT THE GRADALL PARTS DEPARTMENT TO DETERMINE THE CORRECT FORKS APPLICABLE TO YOUR SPECIFIC CARRIAGE ASSEMBLY AND APPLICATION.

Item	Part No.	Qty.	Description Of Part
	9060-0390	2	48" CUBING FORK, 2X2, 3000 lbs., (B, C, & D series)
	9060-1819	2	48" PALLET FORK, 1-3/4X6, 9000 lbs., (B, C, & D series)
	9045-3002	2	48" PALLET FORK, 2X4, 3000 lbs., (B, C, & D series)
	9055-3005	2	48" PALLET FORK, 2X6, 3000 lbs., (B, C, & D series)
	9055-3008	2	48" PALLET FORK, 2X2, 3000 lbs., (used on 6' swing mast only, P/N 9045-5047)
	9060-1015	2	60" PALLET FORK, 2X6, 3000 lbs., (B, C, & D series)
	9006-3269	2	60" PALLET FORK, 2X6, 3000 lbs., (B, C, & D series)
	9045-3045	2	60" PALLET FORK, 2X2, 10,000 lbs., (used on 6' swing mast only, P/N 9045-5054)

Item	Part No.	Qty.	Description Of Part
	9055-3018	2	72" PALLET FORK, 2X6, 10,000 lbs., (B, C, & D series)
	9112-3132	2	72" PALLET FORK, 2X6, 10,000 lbs., (B, C, & D series)
	9060-0832	2	48" FORK, 2-1/4X8, 16,000 lbs., (used on the 542, 552, & 554)
	9060-1873	2	48" FORK, 2-1/4X7, 15,000 lbs., (used on the 542, 552, & 554)
	9060-0833	2	60" PALLET FORK, 2-1/4X8, 16,000 lbs., (used on the 542, 552, & 554)
	9060-1219	2	60" FORK, 2-1/2X8, 16,000 lbs., (used on the 542, 552, & 554)
	9060-1874	2	60" FORK, 2-1/4X7, 15,000 lbs., (used on the 542, 552, & 554)

WAUKESHA DIESEL ENGINE MOUNTING

Starting Serial No. 8344001L
Thru Serial No. 8444490
Waukesha Engine Only
Revised 11-17-00

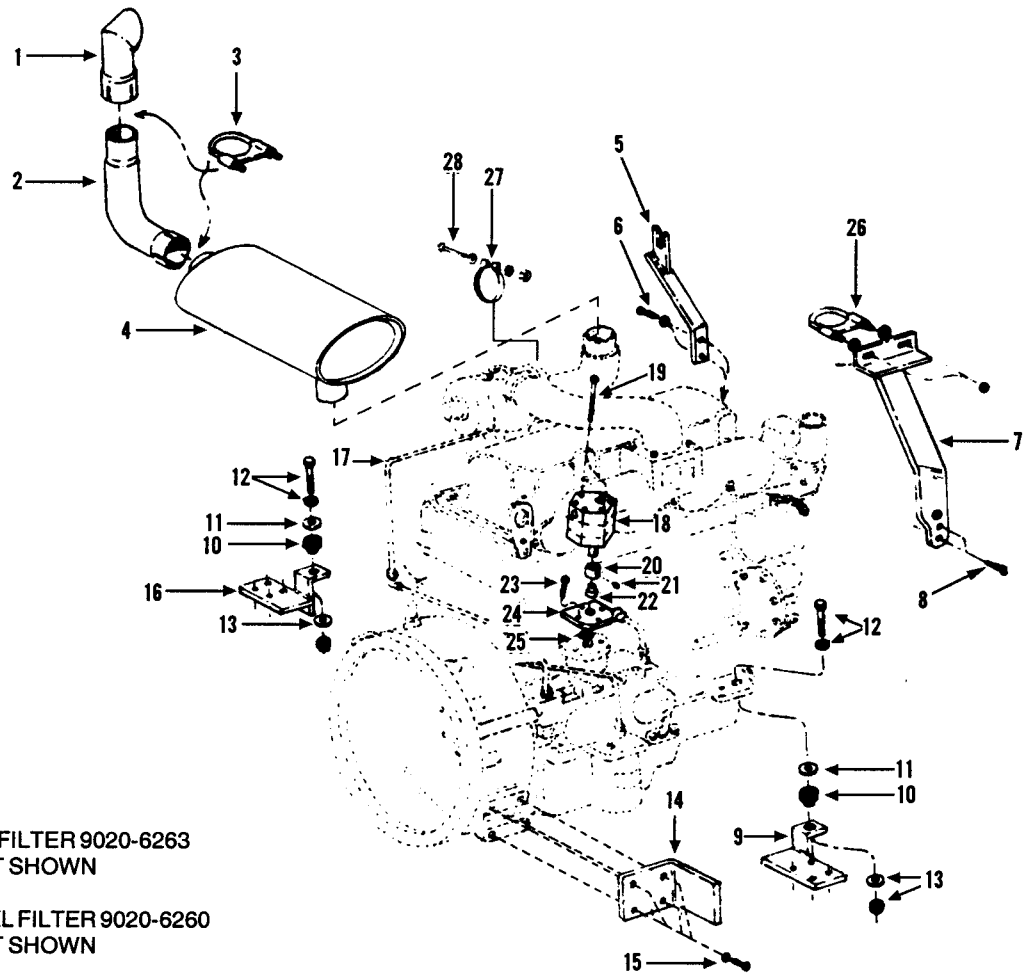

* OIL FILTER 9020-6263
NOT SHOWN

FUEL FILTER 9020-6260
NOT SHOWN

Item	Part No.	Qty.	Description Of Part
1	9020-5861	1	STACK CAP
2	9020-6634	1	EXHAUST ELBOW
3	2492-1332	2	EXHAUST CLAMP
4	9020-7291	1	MUFFLER
5	9020-5971	1	ACCELERATOR CABLE BRACKET
6	8820-1033	2	HEX HD CAPSCREW, 3/8-16X3/4, GR5
	8856-1109	2	FLAT WASHER, 3/8
7	9040-3079	1	MUFFLER MOUNTING BRACKET
8	8820-1037	2	HEX HD CAPSCREW, 3/8-16X1-1/2, GR 5
9	9040-3174	1	ENGINE MOUNT BRACKET, (left)
10	9020-5032	2	CENTER BONDED COMPRESSION MOUNT
11	9020-5654	2	SPECIAL WASHER
12	8820-1073	2	HEX HD CAPSCREW, 1/2-13X3, GR5
	8540-1340	2	WASHER, 1/2
13	9020-5031	2	SPECIAL WASHER
14	9040-3431	1	OIL FILTER GUARD
15	8820-1065	4	HEX HD CAPSCREW, 1/2-13X1, GR5
	8856-1111	4	FLAT WASHER, 1/2
16	9040-3175	1	ENGINE MOUNT BRACKET, (right)

Item	Part No.	Qty.	Description Of Part
17		1	WAUKESHA DIESEL ENGINE, (For parts information see separate engine manual)
18	9040-3305	1	PILOT PUMP
19	8820-1030	2	HEX HD CAPSCREW, 5/16-18X3-1/2, GR5
20	9020-7250	1	ADAPTER
21	9002-8751	1	SET SCREW
22	9020-7251	1	DOWEL
23	8821-1069	2	SOCKET HD CAPSCREW, 3/8-16X3/4, GR8
24	9020-7249	1	ADAPTER PLATE
* 25	9020-7284	1	GASKET
* 26	9020-5866	1	EXHAUST PIPE CLAMP
27	9020-7818	1	CLAMP
	9100-1002	1	GASKET
28	8820-1029	1	HEX HD CAPSCREW, 5/16-18X3-1/4, GR5
	8852-1005	1	HEX LOCKNUT, 5/16-18
	8856-1108	1	FLAT WASHER, 5/16
29	9103-4057	1	STARTER, (not shown)

** Revised oil filter part number & description on item 25; added item 26 to parts list.*

WAUKESHA DIESEL ENGINE MOUNTING

Starting Serial No. 8344001L
Thru Serial No. 8444490
Waukesha Engine Only
Original 5-85
Revised 6-25-99

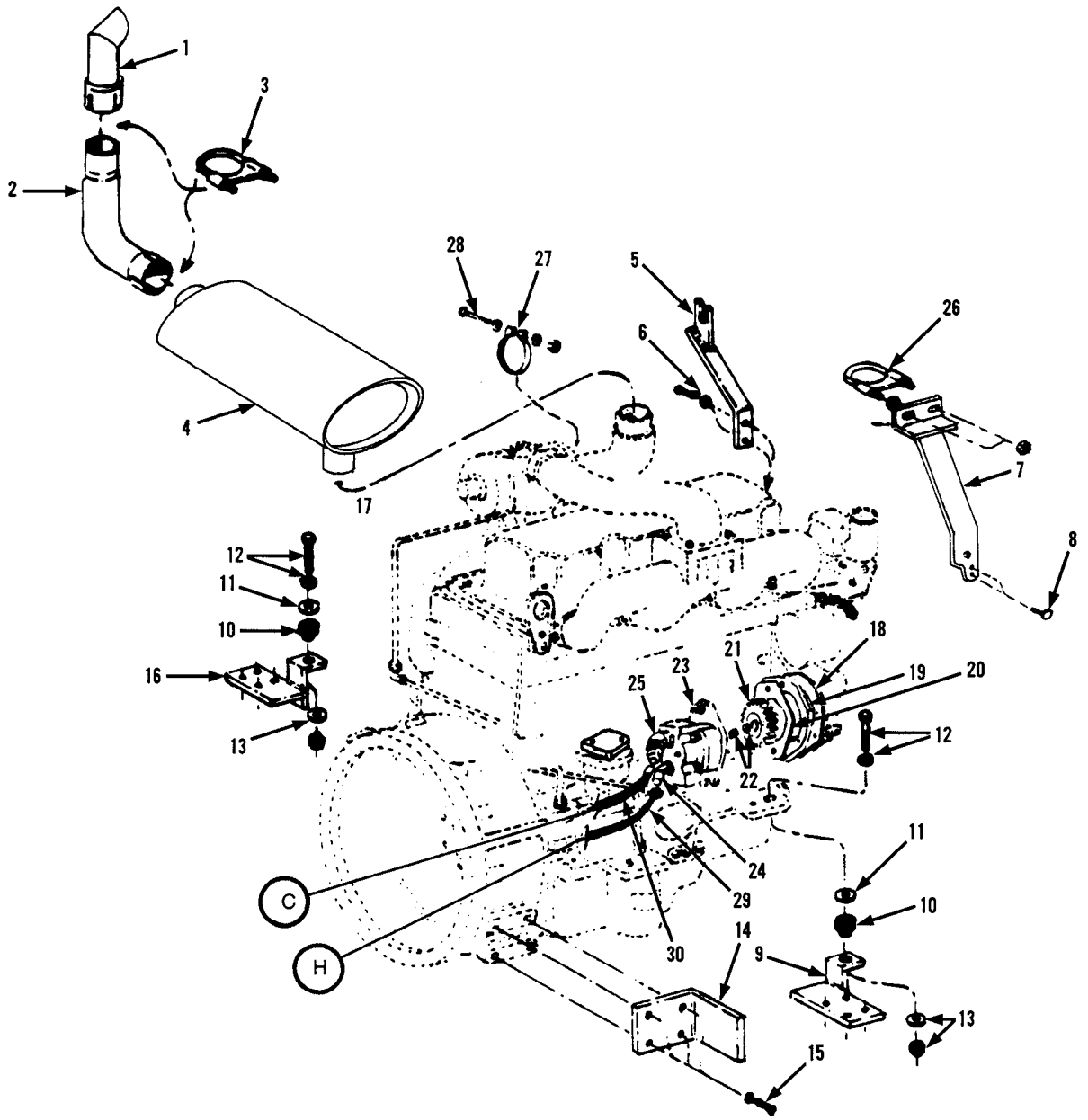

C - SEE PAGE 9 - 10.1
H - SEE PAGE 9 - 10.1

WAUKESHA DIESEL ENGINE MOUNTING

Starting Serial No. 834400L
Thru Serial No. 8444490
Waukesha Engine Only
Original Issue 5-85
Revised 6-25-99

Item	Part No.	Qty.	Description Of Part
1	9020-5861	1	STACK CAP
2	9020-6634	1	EXHAUST ELBOW
3	2492-1332	2	EXHAUST CLAMP
4	9020-7291	1	MUFFLER
5	9020-5971	1	ACCELERATOR CABLE BRACKET
6	8820-1033	2	3/8"-16x3/4" CAPSCREW
	8856-1109	2	3/8" WASHER
7	9040-3079	1	MUFFLER MOUNTING BRACKET
8	8820-1037	2	3/8"-16x1-1/2" CAPSCREW
9	9040-3174	1	ENGINE MOUNTING BRACKET (left)
10	9020-5032	2	CENTER BONDED COMPRESSION MOUNT
11	9020-5654	2	SPECIAL WASHER
12	8820-1073	2	1/2"-13x3" CAPSCREW
	8540-1340	2	1/2" WASHER
13	9020-5031	2	SPECIAL WASHER
	8850-1008	2	1/2"-13 NUT
14	9040-3431	1	OIL FILTER GUARD
15	8820-1065	4	1/2"-13X1" CAPSCREW
	8856-1107	4	WASHER
16	9040-3175	1	ENGINE MOUNTING BRACKET (right)
17		1	WAUKESHA DIESEL ENGINE (for parts information, see separate engine manual)
18	9103-4034	1	ADAPTER GASKET
19	9103-4035	1	PUMP ADAPTER PLATE
20	9103-4036	1	HYDRAULIC PUMP GASKET
21	9103-4037	1	HYDRAULIC PUMP GEAR
22	9103-4038	1	WASHER
	9103-4039	1	CASTLE NUT
23	9103-3156	1	HYDRAULIC GEAR PUMP
24	8656-1309	1	REDUCER / EXPANDER
	8859-1207	1	O-RING
	8866-2085	1	ELBOW, 45 DEGREE
25	9103-3182	1	BEADED INSERT, 45 DEGREE
	8859-1209	1	O-RING
26	9020-5866	1	EXHAUST PIPE CLAMP
27	9020-7818	1	CLAMP
28	8820-1029	1	5/16"-18x3-1/4" BOLT
	8852-1005	1	5/16"-18 NUT
	8856-1108	2	5/16" WASHER
29	8471-7470	1	HOSE ASSEMBLY
30	9103-3179	1	HOSE
31	9103-3139	1	OIL PRESSURE SENDER (not shown)
	8871-2031	1	ELBOW, 45 DEGREE
32	9020-6263		OIL FILTER (not shown)
33	9020-6260		FUEL FILTER (not shown)

PERKINS DIESEL ENGINE MOUNTING

Perkins Engine Only

Starting Serial No. 8444491G
Original Issue 6-99
Revised 6-25-99

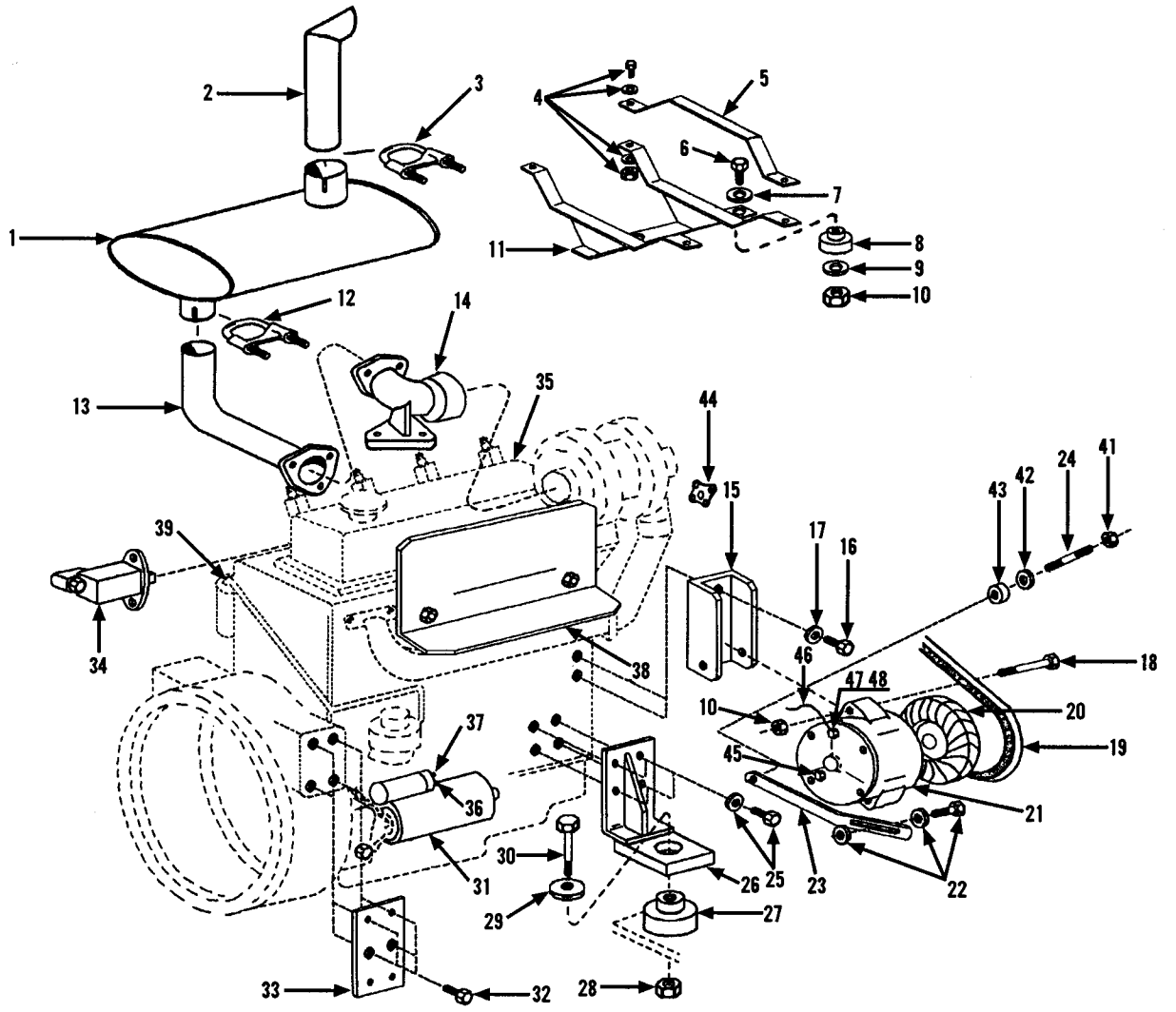

Item	Part No.	Qty.	Description Of Part
	9103-5141	1	ENGINE & TRANSMISSION FILTER KIT (includes 1 each of the following)
	9020-4732	1	TRANSMISSION FILTER
	9020-6262	1	AIR FILTER
	9103-4005	1	FUEL FILTER
	9103-4006	1	OIL FILTER

PERKINS DIESEL ENGINE MOUNTING

Perkins Engine Only

Starting Serial No. 8444491G
Original 6-99
Revised 6-25-99

Item	Part No.	Qty.	Description Of Part
1	9103-3053	1	MUFFLER
2	9103-3381	1	STACK CAP
3	2492-1332	1	CLAMP
4	8820-1009	4	HEX HD CAPSCREW, 1/4-20X2, GR5
	8856-1107	8	FLAT WASHER, 1/4
	8852-1304	4	HEX LOCKNUT, 1/4-20
5	9103-1045	2	MUFFLER STRAP
6	8820-1037	2	HEX HD CAPSCREW, 3/8-16X1-1/2, GR5
7	8368-1481	2	WASHER
8	8368-3308	2	SHOCK MOUNT
9	8856-1109	2	FLAT WASHER, 3/8
10	8852-1306	3	HEX LOCKNUT, 3/8-16
11	9103-6010	1	MUFFLER SUPPORT
	9103-6072	1	MUFFLER SUPPORT (starting serial no. 0144312J)
12	8368-3175	1	CLAMP
13	9103-6011	1	HEADER PIPE
	9103-6073	1	HEADER PIPE (starting serial no. 0144312J)
	9103-6099	1	HEADER PIPE (starting serial no. 0144687J)
14	9103-6012	1	EXHAUST MANIFOLD
	8820-1534	3	HEX HD CAPSCREW, 3/8-24X1, GRS
	8855-1011	3	LOCKWASHER, 3/8
15	9103-1395	1	ALTERNATOR BRACKET
16	8820-1534	2	HEX HD CAPSCREW, 3/8-24X1, GR5
17	1200-1234	2	HARDENED WASHER, 3/8
18	8820-1045	1	HEX HD CAPSCREW, 3/8-16X3-1/2, GR5
19	9103-3248	1	FAN BELT
20	9103-3074	1	ALTERNATOR FAN
21	9103-3234	1	ALTERNATOR
22	8319-1028	1	BOLT, M8X1.25, GR8
	8319-1011	1	LOCKWASHER, M8
	9002-7469	1	HARDENED WASHER

Item	Part No.	Qty.	Description Of Part
23	9103-1404	1	ALTERNATOR ADJUSTMENT STRAP
24	9103-3329	1	STUD
25	8820-1549	8	HEX HD CAPSCREW, 7/16-20X1, GR5
	8855-1012	8	LOCKWASHER, 7/16
26	9103-6009	2	MOTOR MOUNT
27	9020-5032	2	SHOCK MOUNT
28	8852-1208	2	HEX LOCKNUT, 1/2-13
29	9020-5031	2	SPECIAL WASHER
30	8820-1072	2	HEX HD CAPSCREW, 1/2-13X2-3/4, GR5
31	9103-3323	1	STARTER MOTOR
	9103-3268	3	MOUNTING STUD
32	8820-1066	2	HEX HD CAPSCREW, 1/2-13X3, GR5
	8855-1013	2	LOCKWASHER, 1/2
33	9103-1041	1	MOUNTING PLATE
34		Ref	PILOT PUMP (see page 10-15A for details)
35	9103-3258	1	PERKINS DIESEL ENGINE (see separate engine manual for parts information)
36	9103-3133	2	NUT, M5X.08
37	9103-3134	1	NUT, M10X 1.5
38	9103-1152	1	HEAT SHIELD
39	9103-3136	1	1/4"X3" TUBE (fuel filter)
40	9103-3246	1	OIL PRESSURE SENDER (100 PSI) (not shown)
41	8850-1005	1	HEX NUT, 5/16-18
42	8850-1010	1	LOCKWASHER, 5/16
43	8667-1164	2	SPACER
44	9103-3256	1	FAN BLADE SPACER
45	8319-1019	1	HEX NUT, M6X1
46	9020-7497	1	JUMPER WIRE
47	8319-1007	1	HEX HD CAPSCREW, M8X1.25, GR8
48	8319-1011	1	LOCKWASHER, M8

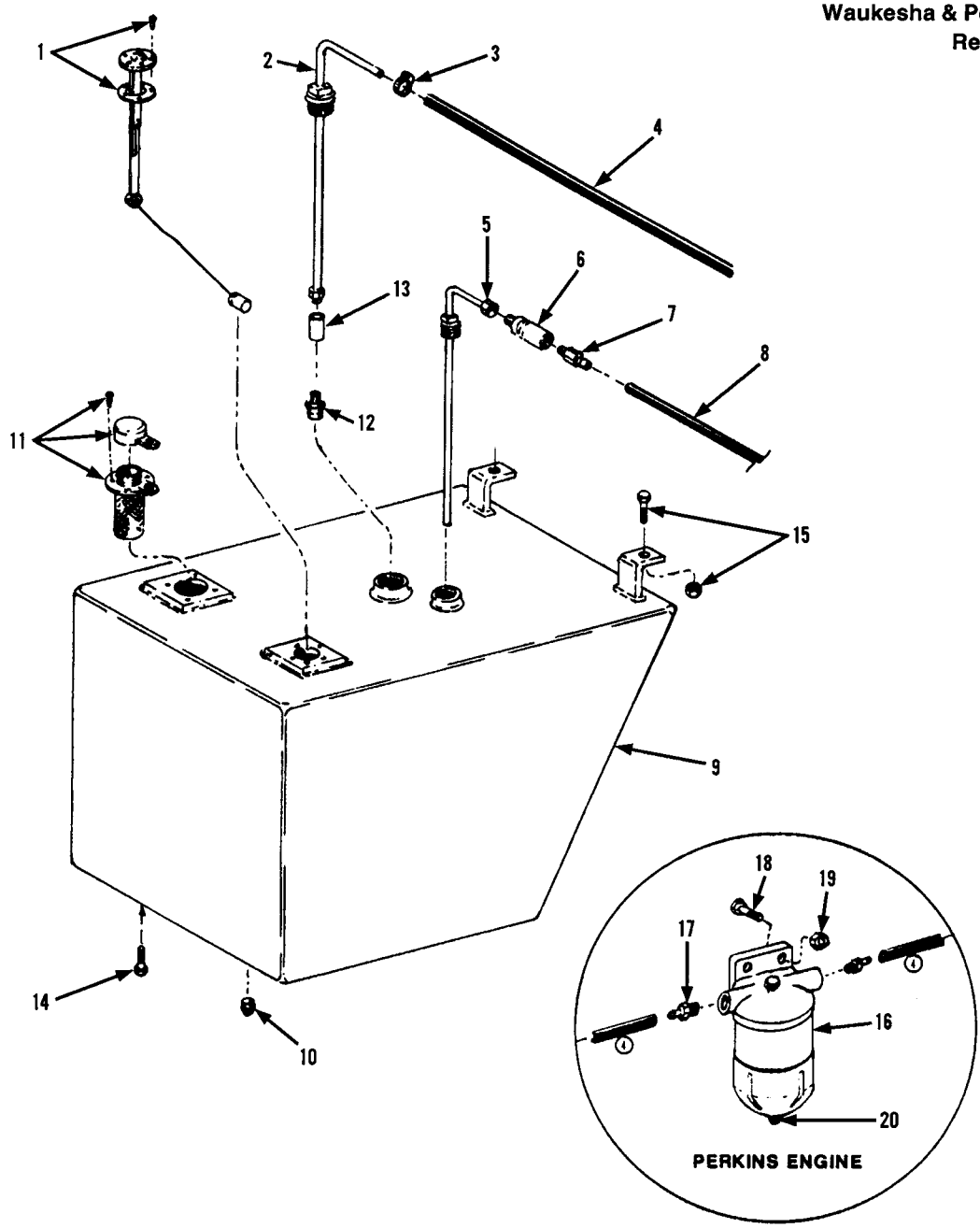

Item	Part No.	Qty.	Description Of Part
1	9040-0654	1	FUEL LEVEL SENDER (includes gasket and mounting hardware)
* 2	9105-6106	1	FUEL LINE (to engine filter)
3	8348-3497	AR	HOSE CLAMP
4		1	HOSE 3/8" I.D. (Waukesha)
		2	HOSE 5/16" I.D. (Perkins)
5	9040-2827	1	FUEL RETURN LINE (Diesel)
6	8668-3330	1	CHECK VALVE (not used after S/N 8444490)
7	9002-8674	1	PUSH LOCK FITTING
8		1	HOSE 1/4" I.D.
* 9	9080-1199	1	FUEL TANK (S/N 8344001L thru S/N 8644765)
	9103-6047	1	FUEL TANK (staring S/N 8644766)
10	8871-1255	1	SQ. HD PIPE PLUG, 1"

Item	Part No.	Qty.	Description Of Part
*11	9100-3186	1	FILLER BREATHER (includes gasket and mounting hardware)
	8654-1381	1	SCREW ON GAS CAP
12	9020-5223	1	SUCTION SCREEN
*13	8871-1212	1	PIPE COUPLING, 3/8
*14	8820-1065	1	HEX HD CAPSCREW, 1/2-13X1, GR5
*15	8820-1071	1	HEX HD CAPSCREW, 1/2-13X2-1/2, GR5
	8850-1008	1	HEX NUT, 1/2-13
*16	9103-3054	1	WATER SEPARATOR
*17	9103-3131	2	BARB CONNECTOR
*18	8820-1021	2	HEX HD CAPSCREW, 5/16-18X1-1/4, GR5
*19	8852-1305	2	HEX LOCKNUT, 5/16-18
*20	9103-4396	1	SCREW ASSY (push-on type)

FUEL TANK and LINES

Starting S/N 8644013G
Original Issue 2-88
Revised 11-27-00

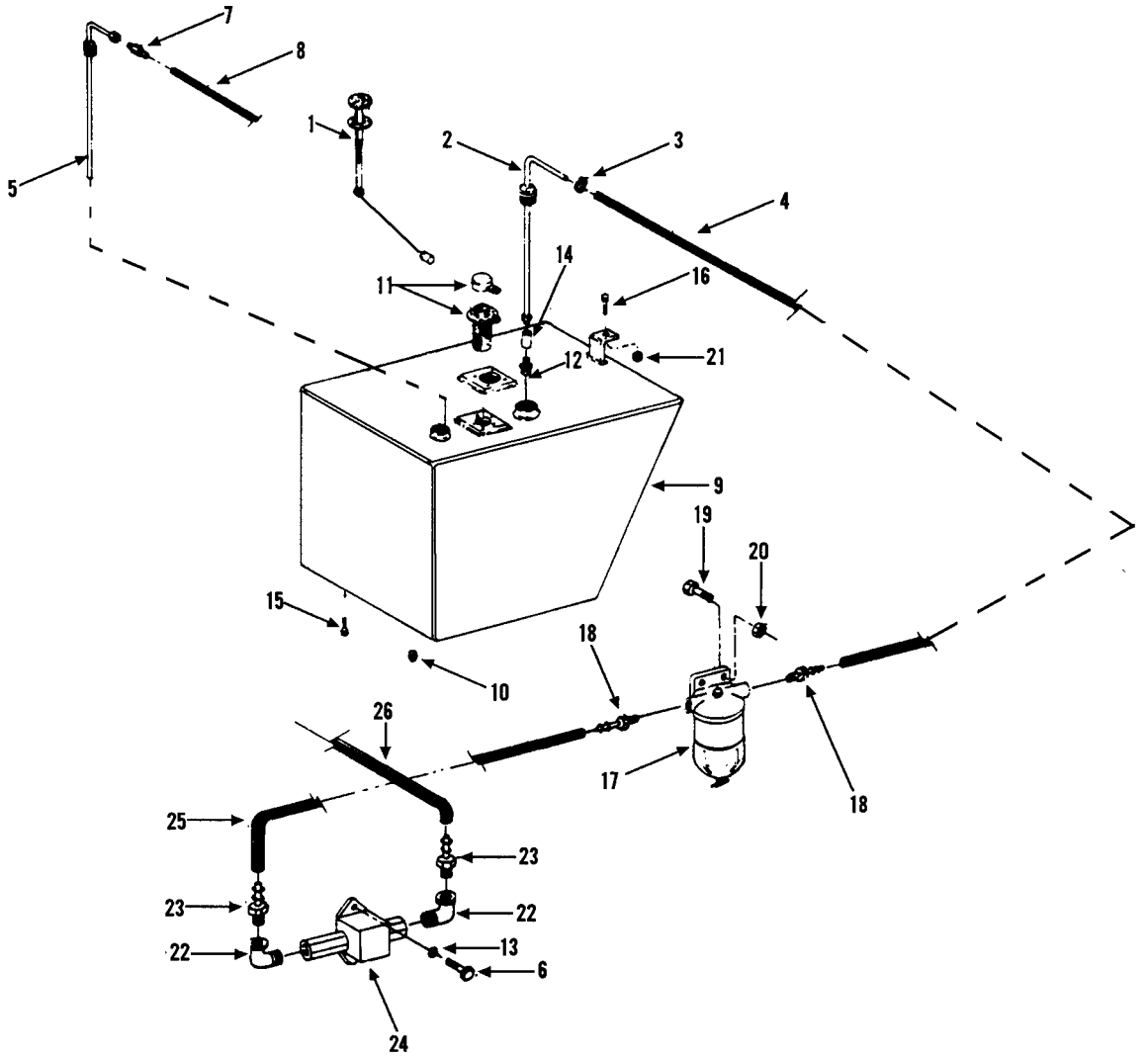

Item	Part No.	Qty.	Description Of Part
* 1	9040-0654	1	FUEL LEVEL SENDER, (includes gasket & mounting hardware)
2	9105-6106	1	FUEL LINE, (to engine filter)
3	8348-3497	AR	HOSE CLAMP
4	8209-2118	20"	HOSE, 5/16" I.D.
5	9040-2827	1	FUEL RETURN LINE
6	8820-1001	2	HEX HD CAPSCREW, 1/4-20X1/2, GR5
7	9002-8674	1	PUSH LOCK FITTING
8	9020-7422	1	HOSE, 1/4" I.D.
* 9	9103-6047	1	FUEL TANK
10	8871-1255	1	SQUARE HD PIPE PLUG, 1"
11	9100-3186	1	FILLER-BREATHER, (includes cap, gasket & mounting hardware)
	9103-4224	1	RESERVIOR CAP, (with locking tab)
12	9020-5223	1	SUCTION SCREEN

Item	Part No.	Qty.	Description Of Part
13	8855-1009	2	LOCKWASHER, 1/4
14	8871-1212	1	PIPE COUPLING, 3/8
15	8820-1065	1	HEX HD CAPSCREW, 1/2-13X1, GR5
16	8820-1071	1	HEX HD CAPSCREW, 1/2-13X2-1/2, GR5
17	9103-3054	1	WATER SEPARATOR
18	9103-3131	2	BARB CONNECTOR
19	8820-1021	2	HEX HD CAPSCREW, 5/16-18X1-1/4 GR5
20	8852-1305	2	HEX LOCKNUT, 5/16-18
21	8850-1008	1	HEX NUT, 1/2-13
22	8871-2081	2	STREET ELBOW- 90 DEGREES, 3/8
23	8874-1801	2	HOSE NIPPLE
24	9103-3270	1	PRIMER PUMP
25	8209-2118	12"	HOSE, 5/16" I.D.
26	8209-2118	70"	HOSE, 5/16" I.D.

** Revised part number on items 1 & 9.*

FUEL TANK and LINES

Starting Serial No. 0144638J
Original Issue 5-89
Revised 11-28-00

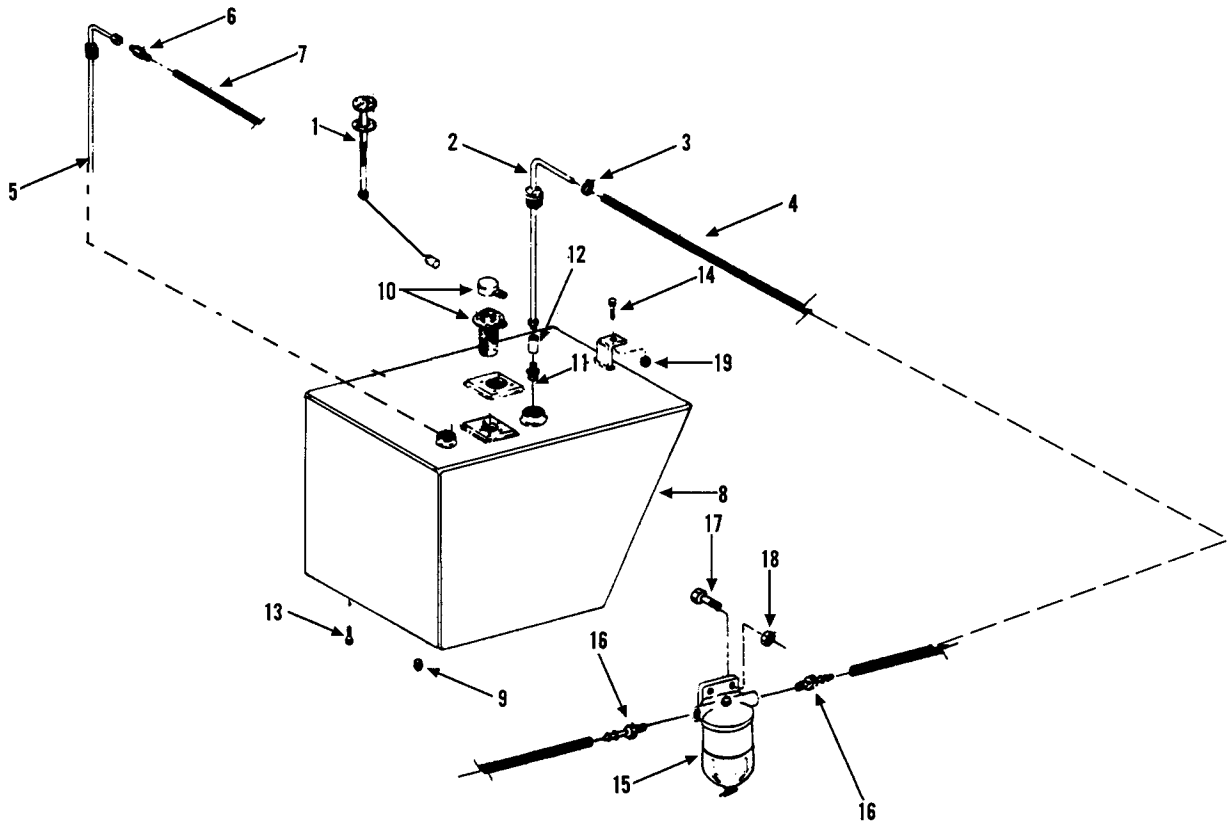

Item	Part No.	Qty.	Description Of Part
* 1	9040-0654	1	FUEL LEVEL SENDER, (includes gasket & mounting hardware)
2	9105-6106	1	FUEL LINE, (to engine filter)
3	8348-3497	AR	HOSE CLAMP
4		AR	HOSE, 3/16" I.D.
5	9040-2827	1	FUEL RETURN LINE
6	9002-8674	1	PUSH LOCK FITTING
7	9020-7422	1	HOSE, 1/4 I.D.
* 8	9103-6047	1	FUEL TANK
9	8871-1255	1	SQUARE HD PIPE PLUG, 1"
10	9100-3186	1	FILLER- BREATHER, (includes cap, gasket & mounting hardware)

Item	Part No.	Qty.	Description Of Part
*	9103-4224	AR	RESERVIOR CAP, (includes locking tab)
11	9020-5223	1	SUCTION SCREEN
12	8871-1212	1	PIPE COUPLING, 3/8
13	8820-1065	1	HEX HD CAPSCREW, 1/2-13X1, GR5
14	8820-1071	1	HEX HD CAPSCREW, 1/2-13X2-1/2, GR5
15	9103-3054	1	WATER SEPARATOR
16	9103-3131	2	BARB CONNECTOR
17	8820-1021	2	HEX HD CAPSCREW, 5/16-18X1-1/4, GR5
18	8852-1305	2	HEX LOCKNUT, 5/16-18
19	8850-1008	1	HEX NUT, 1/2-13

** Revised part numbers on items 1, 8, and the Reservior Cap.*

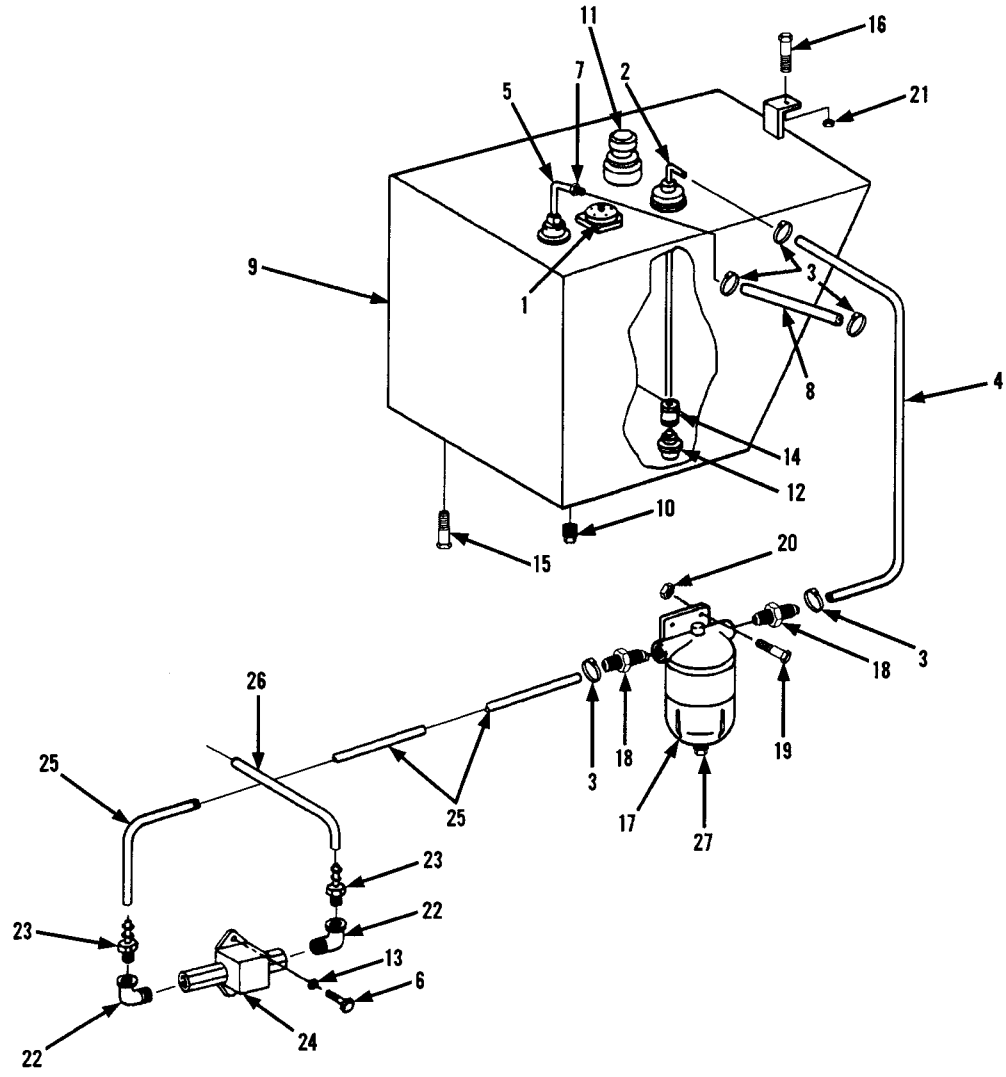

Item	Part No.	Qty.	Description Of Part
1	9040-0654	1	FUEL LEVEL SENDER (includes gasket and mounting hardware)
* 2	9105-6106	1	FUEL LINE (to engine filter)
3	8348-3497	AR	HOSE CLAMP
4		20"	HOSE 5/16" I.D.
5	9040-2827	1	FUEL RETURN LINE (Diesel)
6	8820-1001	2	HEX HD CAPSCREW, 1/4-20X1/2, GR5
7	9002-8674	1	PUSH LOCK FITTING
8		1	HOSE 1/4" I.D.
9	9103-6047	1	FUEL TANK
10	8871-1255	1	SQ. HD PIPE PLUG, 1"
*			

Item	Part No.	Qty.	Description Of Part
*11	9100-3186	1	FILLER BREATHER (includes gasket and mounting hardware)
	8654-1381	1	SCREW ON GAS CAP
12	9020-5223	1	SUCTION SCREEN
*13	8855-1009	2	LOCKWASHER,1/4
*14	8871-1212	1	PIPE COUPLING, 3/8
*15	8820-1065	1	HEX HD CAPSCREW, 1/2-13X1, GR5
16	8820-1071	1	HEX HD CAPSCREW, 1/2-13X2-1/2, GR5
*17	9103-3054	1	WATER SEPARATOR
*18	9103-3131		
*			
*			
*			

RADIATOR and HOSES

Starting Serial No. 8344001L
Thru Serial No. 8444490G
Waukesha Engine Only
Revised 6-25-99

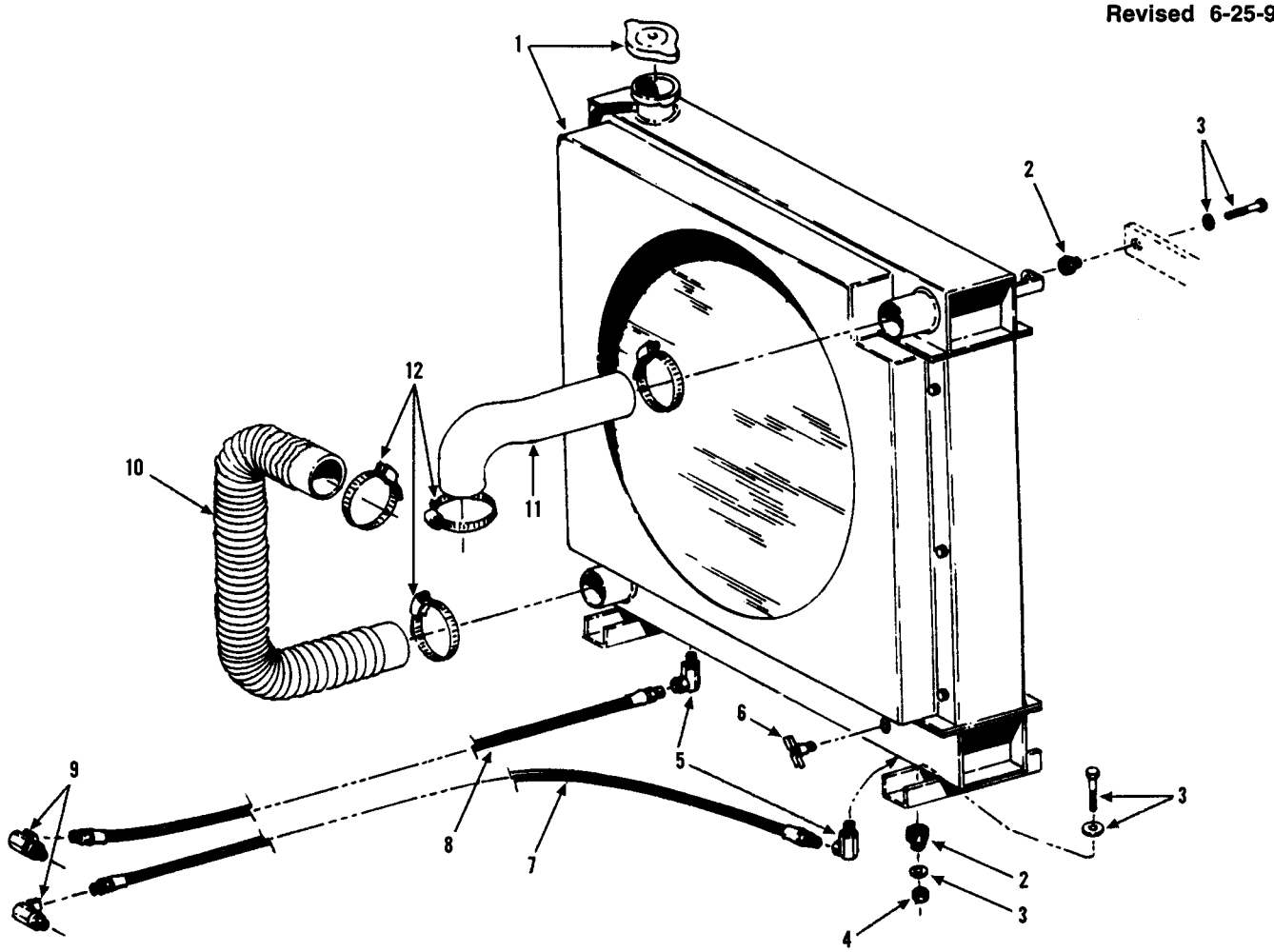

Item	Part No.	Qty.	Description Of Part
1	9060-1917	1	RADIATOR
		1	CAP
2	9020-0342	4	COMPRESSION MOUNTING
3	8820-1038	AR	HEX HD CAPSCREW, 3/8-16 X 1 3/4
	9020-5918	10	WASHER, 3/8"
4	8852-1206	AR	HEX LOCKNUT, 3/8-16
5	9002-8492	2	ELBOW - 90 DEGREE
6	9020-0557	1	DRAIN PETCOCK
7	9020-5195	1	HIGH PRESSURE HOSE
8	9020-5194	1	HIGH PRESSURE HOSE
9	9002-8496	2	ELBOW - 90 DEGREE
10	8667-1224	1	BOTTOM RADIATOR HOSE
11	9020-6105	1	TOP RADIATOR HOSE
12	8423-1107	4	HOSE CLAMP

RADIATOR and HOSES

Starting Serial No. 8444491
Perkins Engine Only
Original Issue 2-85
Revised 6-25-99

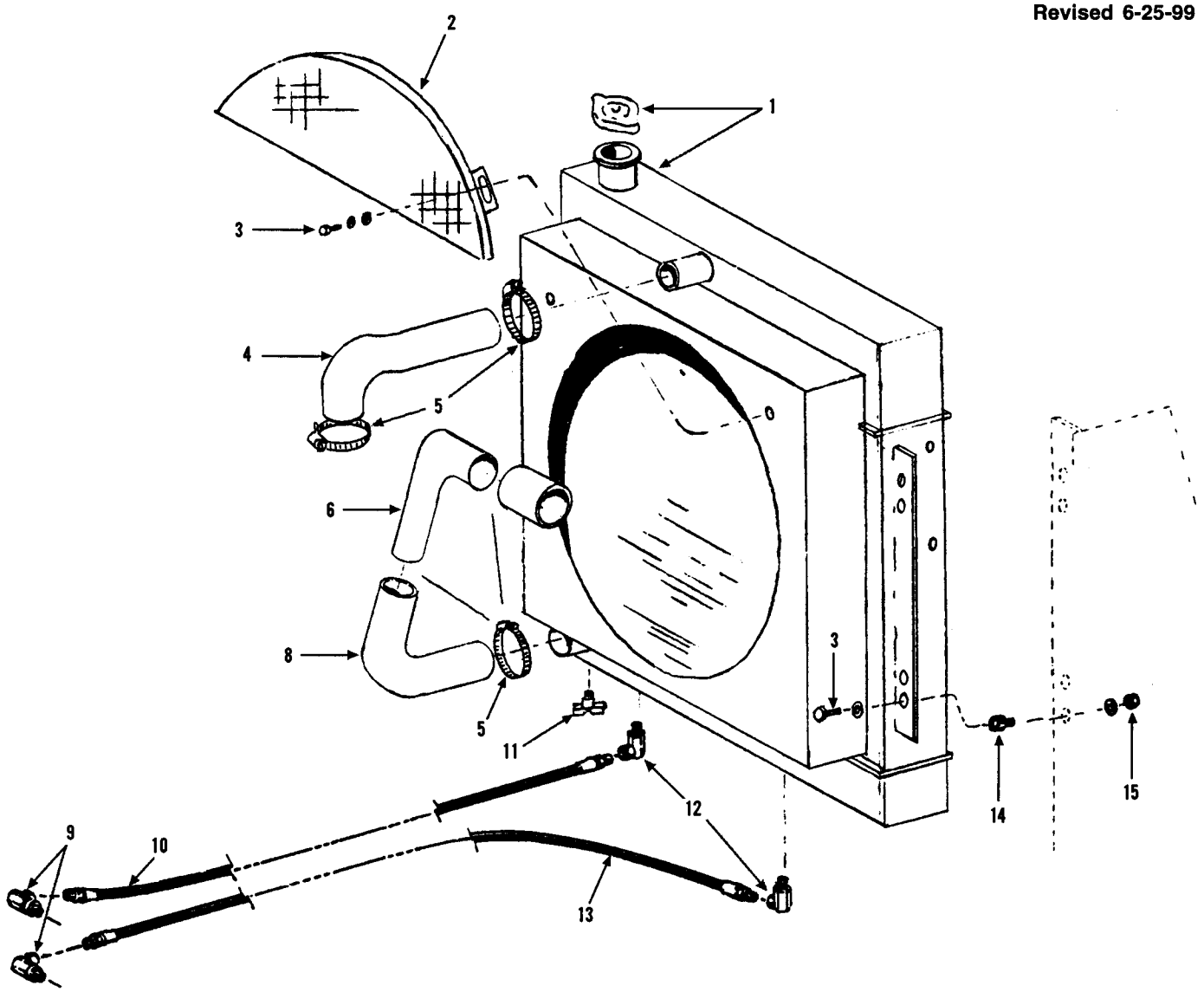

Item	Part No.	Qty.	Description Of Part
1	9103-3048	1	RADIATOR
2	9103-6033	1	FAN GUARD
3	8820-1003	6	CAPSCREW, 1/4-20X3/4
	8855-1009	14	LOCKWASHER, 1/4
	8856-1107	14	FLAT WASHER, 1/4
4	9103-3132	1	HOSE, UPPER RADIATOR
5	8507-1128	6	HOSE CLAMP
6	9103-3061	1	WATER PIPE
7	9103-3062	1	HOSE, CONNECTOR
8	9103-3063	1	HOSE, LOWER RADIATOR
9	9002-8496	2	ELBOW, 90 DEGREE
10	9020-5194	1	HOSE, HIGH PRESSURE
11	8452-1056	1	PETCOCK, DRAIN
12	9002-8492	2	ELBOW, 90 DEGREE
13	9020-5195	1	HOSE, HIGH PRESSURE
14	9103-3137	4	SHOCK MOUNT
15	8852-1305	4	NUT, 1/4X20

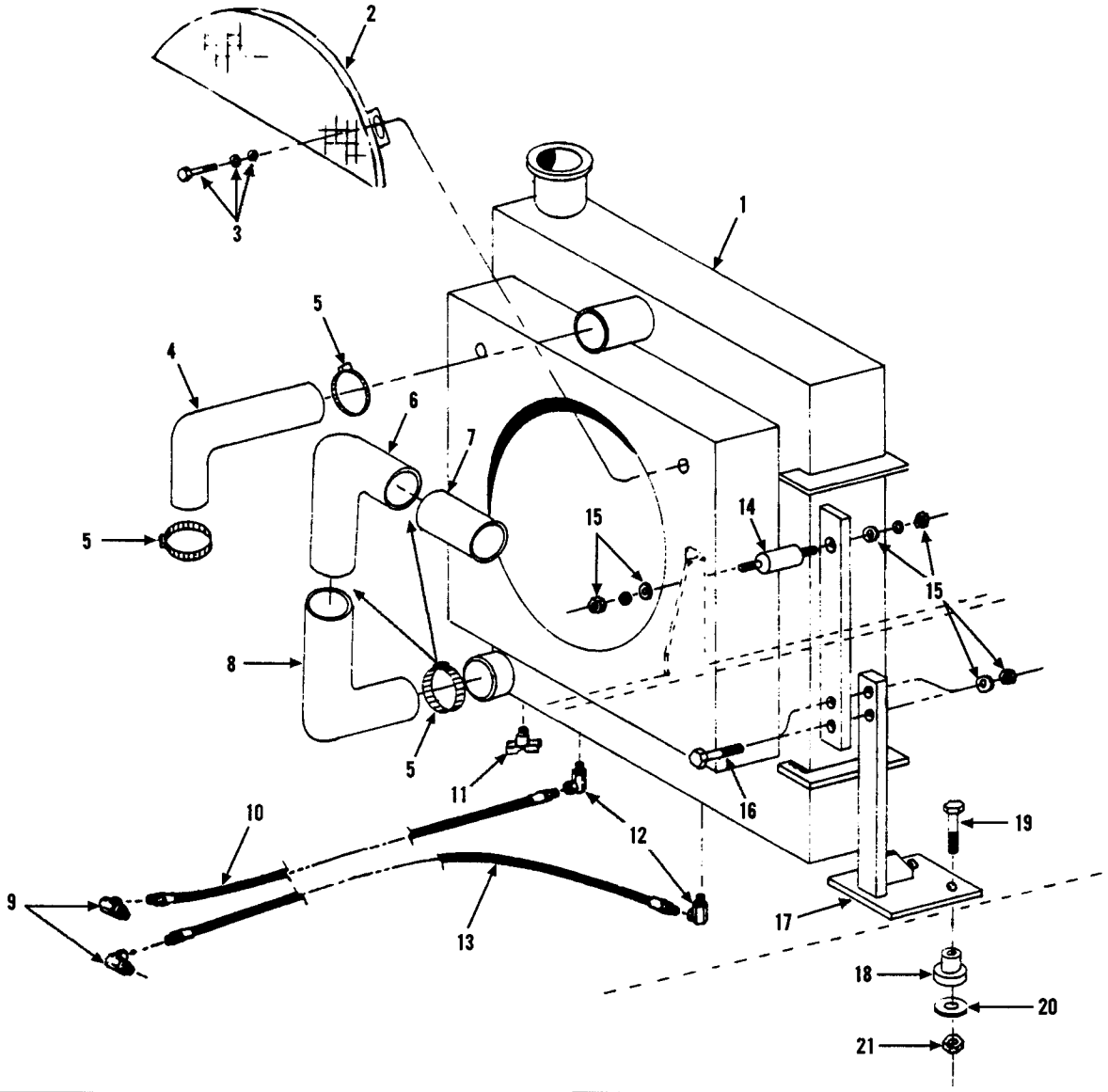

Item	Part No.	Qty.	Description Of Part
1	9103-3254	1	RADIATOR (includes cap)
	9103-4160	1	CAP
2	9103-6051	1	FAN GUARD
3	8820-1003	2	HEX HD CAPSCREW, 1/4-20X3/4 GR5
	8855-1009	2	LOCKWASHER, 1/4
	8856-1107	2	FLAT WASHER, 1/4
4	9103-3132	1	UPPER RADIATOR HOSE
5	8504-1654	6	HOSE CLAMP
6	9103-3061	1	LOWER WATER PIPE
7	9103-3062	1	CONNECTOR HOSE
8	9103-3063	1	LOWER RADIATOR HOSE
9	8866-2067	2	ELBOW - 90 DEGREES (includes o-ring)
	8859-1207	2	O-RING
10	8471-7571	1	HOSE ASSY

Item	Part No.	Qty.	Description Of Part
11	8452-1056	1	DRAIN PETCOCK
12	8866-1118	2	MALE ELBOW, 90 DEG. 3/4X3/4 TUBE
13	8471-7570	1	HOSE ASSY
14	9103-3137	2	SHOCK MOUNT
15	8852-1305	8	HEX LOCKNUT, 5/16-18
	8856-1108	8	FLAT WASHER, 5/16
16	8820-1022	4	HEX HD CAPSCREW, 5/16-18X1-1/2 GR5
17	9100-6016	1	L.H. RADIATOR MOUNT
	9100-6017	1	R.H. RADIATOR MOUNT
18	8368-3308	4	SHOCK MOUNT
19	8820-1039	4	HEX HD CAPSCREW, 3/8-16X2, GR5
20	9020-5918	4	SPECIAL WASHER
21	8852-1206	4	HEX LOCKNUT, 3/8-16
22	9020-7622	1	HOSE GUARD

ETHER STARTING KIT

Starting Serial No. 8344001L
Revised 6-25-99

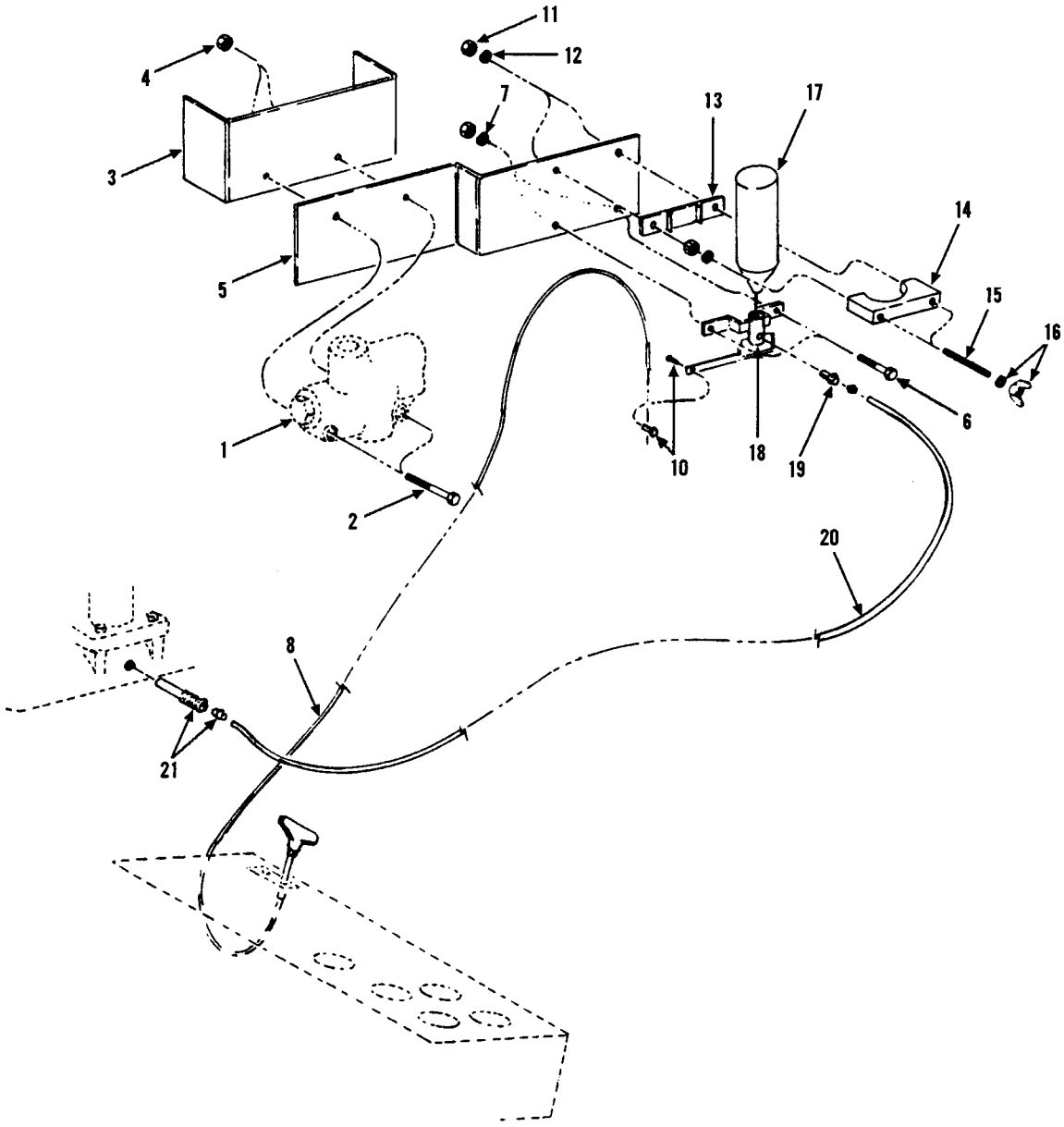

Item	Part No.	Qty.	Description Of Part
1	9020-5585		PRIORITY VALVE (2000 PSI relief setting)
	9103-3240		PRIORITY VALVE (2500 PSI relief setting)
2	8820-1029	2	HEX HD CAPSCREW, 5/16-18X3 1/4, GR5
3	9020-5767	1	VALVE MOUNTING BRACKET (existing)
4	8850-1005	2	HEX NUT 5/16-18
5	9040-3110	1	ETHER START MOUNTING BRACKET
6	8820-1003	2	HEX HD CAPSCREW, 1/4-20X3/4, GR5
7	8856-1107	2	FLAT WASHER, 1/4
	8850-1004	2	HEX NUT, 1/4-20
8	9020-0308	1	CABLE

Item	Part No.	Qty.	Description Of Part
9	9020-6316	AR	ETHER START KIT (includes items 10 thru 21)
10	NSS	1	CABLE STOP
11	NSS	4	NUT
12	NSS	4	LOCKWASHER
13	NSS	1	TANK MOUNTING BRACKET
14	NSS	1	CLAMP
15	NSS	2	STUD
16	NSS	6	LOCKWASHER
	NSS	2	WING NUT
17	NSS	1	ETHER TANK
18	NSS	1	VALVE
19	NSS	1	VALVE FITTING
20	NSS	1	HOSE
21	NSS	1	ATOMIZER

AIR CLEANER PIPING WAUKESHA DIESEL ENGINE

Starting Serial No. 8344001L
Thru Serial No. 8444490G
Waukesha Engine Only
Revised 6-25-99

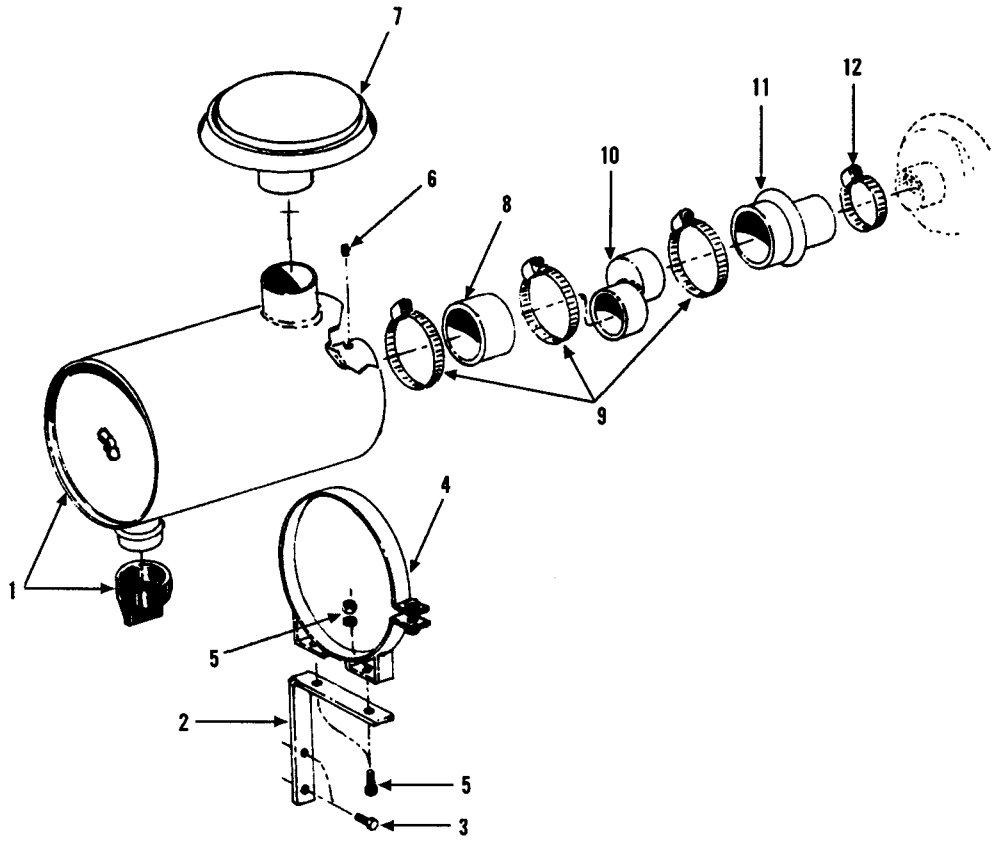

Item	Part No.	Qty.	Description Of Part
1	9020-5663	1	AIR CLEANER
2	9020-7469	2	AIR CLEANER MOUNTING BAR
3	8820-1035	4	HEX HD CAPSCREW, 3/8-16X1, GR5
4	7710-3138	2	AIR CLEANER MOUNTING BANDS
5	8820-1020	4	HEX HD CAPSCREW, 5/16-18X1,GR5
	8852-1205	4	HEX LOCKNUT, 5/16-18
	8855-1010	4	LOCKWASHER, 5/16
6	9002-8682	1	CAP, 1/8 NPT
7	9103-3028	1	FILTER CAP
8	9020-7869	1	HOSE
9	9002-7713	3	CLAMP
10	9020-7863	1	ADAPTER
11	9020-5667	1	REDUCER
12	8511-1214	1	CLAMP

AIR CLEANER PIPING PERKINS DIESEL ENGINE

Starting Serial No. 8444491
Original Issue 2-85
Revised 6-25-99

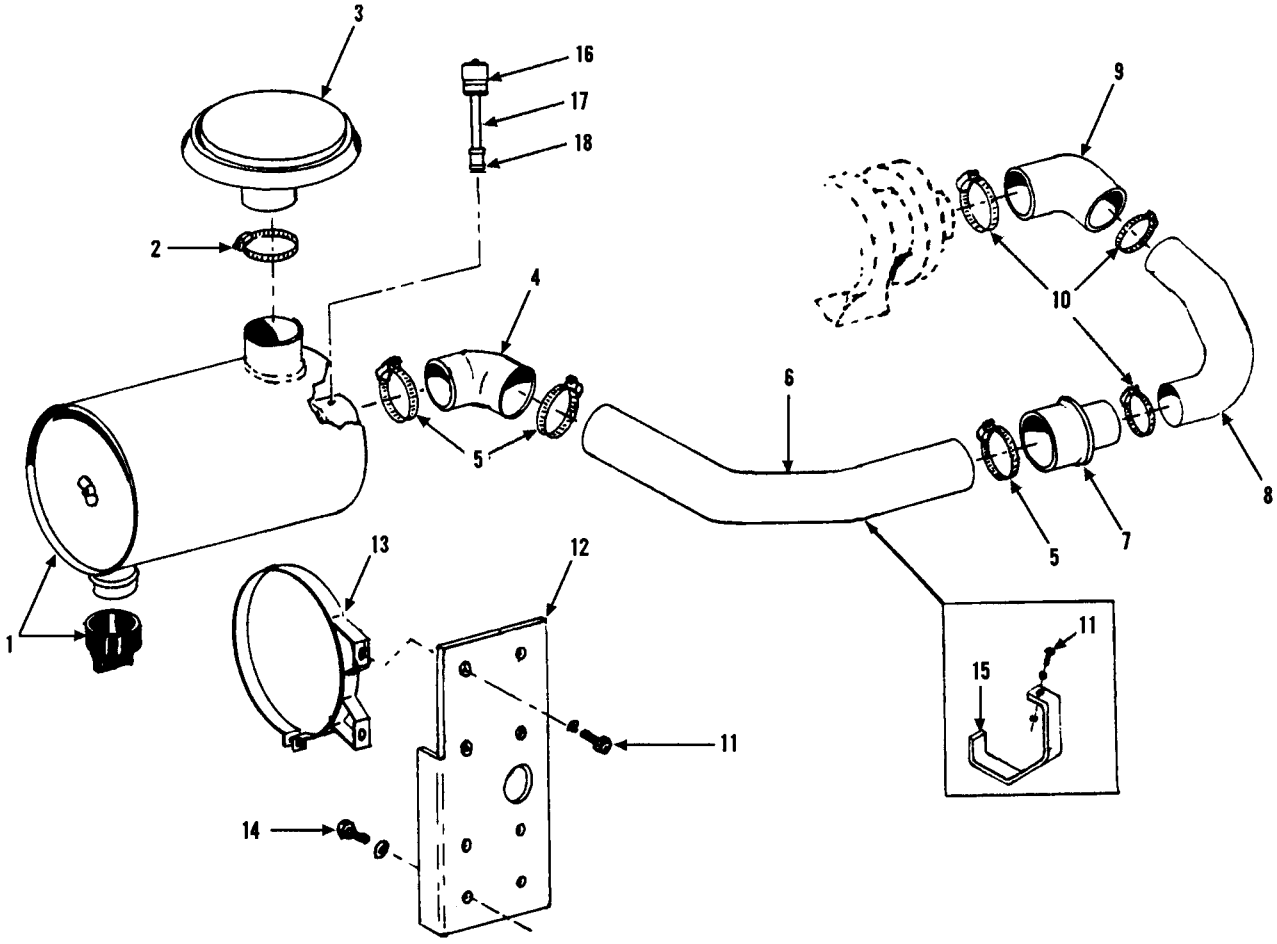

Item	Part No.	Qty.	Description Of Part
1	9020-5663	1	AIR CLEANER
2	8503-1160	1	CLAMP
3	9103-3028	1	INLET CAP
4	9103-3056	1	ELBOW - 90 DEGREE
5	9002-7713	3	HOSE CLAMP
6	9103-3060	1	INTAKE TUBE
7	9103-3055	1	REDUCER
8	9103-3059	1	INTAKE TUBE
9	9103-3058	1	REDUCING ELBOW
10	8688-3327	3	CLAMP
11	8820-1020	5	HEX HD CAPSCREW, 5/16-18X1,GR5
	8856-1108	5	FLAT WASHER, 5/16
	8852-1205	5	HEX LOCKNUT, 5/16-18
12	9103-1042	1	AIR CLEANER BRACKET
13	7710-3138	2	MOUNTING BANDS
14	8820-1018	4	HEX HD CAPSCREW, 5/16-18X3/4, GR5
	8855-1010	4	LOCKWASHER, 5/16
15	9103-1154	1	BRACKET
16	7738-3154	1	SERVICE INDICATOR
17	8870-1023	1	NIPPLE, 1/8X3
18	8871-1210	1	PIPE COUPLING, 1/8

** Changed page number from 5-5A to 5-5.*

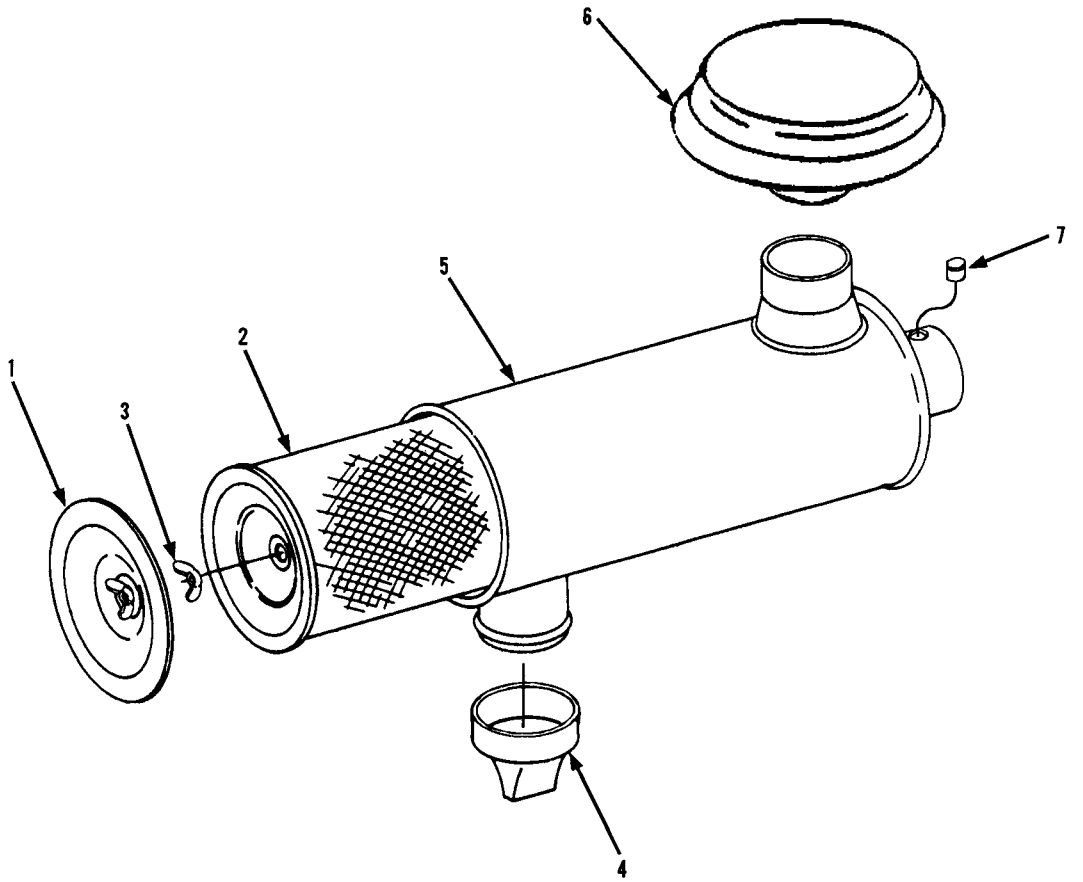

Item	Part No.	Qty.	Description Of Part
	9020-5663	1	AIR CLEANER (includes items 1 thru 5)
1	9020-6606	1	COVER
2	9020-6262	1	ELEMENT
3	9020-1414	1	WING NUT W/SEAL
4	9020-0807	1	VACUATOR
5		1	BODY (not sold separately, for service, order p/n 9020-5663)
6	9103-3028	1	AIR INLET
7	9002-8682	1	CAP, 1/8" NPT

TRANSMISSION MOUNTING & CONTROLS

Starting Serial No. 8344001L
Revised 7-1-99

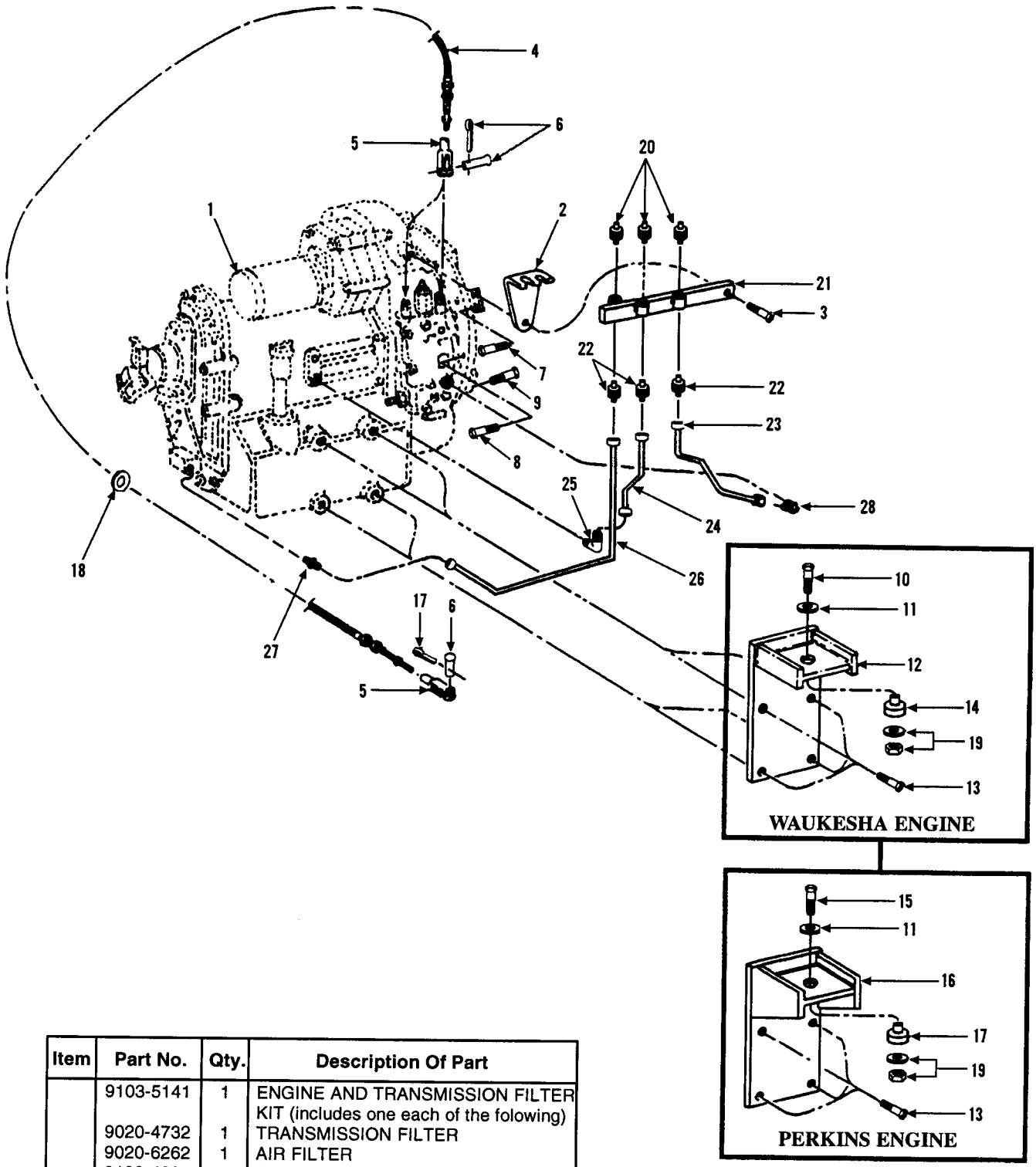

Item	Part No.	Qty.	Description Of Part
	9103-5141	1	ENGINE AND TRANSMISSION FILTER KIT (includes one each of the folowing)
	9020-4732	1	TRANSMISSION FILTER
	9020-6262	1	AIR FILTER
	9103-4005	1	FUEL FILTER
	9103-4006	1	OIL FILTER

Item	Part No.	Qty.	Description Of Part
*	9103-4326	1	TRANSMISSION O-RING KIT
*	9103-4327	1	TORQUE CONVERTER O-RING KIT
1	9020-5166	1	TRANSMISSION
2	9040-2642	1	CABLE MOUNTING BRACKET
3	8820-1066	1	HEX HD CAPSCREW, 1/2-13X 1-1/4,GR5
4	9020-3374	2	CONTROL CABLE
5	8882-1003	4	ADJUSTABLE YOKE END
6	9002-7720	4	CLEVIS & COTTER PIN
7	9002-8664	8	BOLT, 12 PT. 3/8X1-1/4 (waukesha)
	8820-1537	8	HEX HD CAPSCREW, 3/8-24X1-3/4, GR5 (perkins only)
8	8820-1036	11	HEX HD CAPSCREW, 3/8-16X1-1/4, GR5
	8855-1011	11	LOCKWASHER, 3/8
9	9020-5002	1	STUD, 3/8-16X1-3/4
	8850-1006	1	HEX NUT, 3/8-16
10	8820-1119	2	HEX HD CAPSCREW, 3/4-10X4, GR5
11	9020-7219	2	WASHER
12	9060-1946	1	MOUNTING BRACKET (left)
	9060-1947	1	MOUNTING BRACKET (right)
13	8820-1110	8	HEX HD CAPSCREW, 3/4-10X1-3/4, GR5
	8855-1016	8	LOCKWASHER, 3/4
*14	9060-0097	2	COMPRESSION MOUNTING
15	8820-1120	2	HEX HD CAPSCREW, 3/4-10X4-1/2, GR5
16	9103-6008	2	MOUNTING BRACKET
17	8507-1340	2	COMPRESSION MOUNTING
18	9020-2303	2	CABLE GROMMET
19	8850-1012	2	HEX NUT, 3/4-10
	8856-1115	2	FLAT WASHER, 3/4
*20	9103-5112	3	PRESSURE SWITCH
21	9040-3349	1	SWITCH BRACKET
22	8874-3000	3	MALE ADAPTER, 1/8X1/4 TUBE
23	9020-7258	1	TUBE LINE
24	9020-7257	1	TUBE LINE
25	8874-3055	1	MALE ELBOW, 90 DEGREES, 1/4X1/4 TUBE
26	9020-7256	1	TUBE LINE
27	9002-8750	1	ADAPTER
28	8874-3041	1	MALE ELBOW, 90 DEGREES, 1/8X1/4 TUBE
*29	9103-3283	1	TRANS. TEMP. SENDER (not shown)
*30	9103-3282	1	TRANS. TEMP. GAGE (not shown) (see page 11-1 & 11-1A for details)

FLEX PLATE and TORQUE CONVERTER

Starting Serial No. 8344001L
Revised 11-27-00

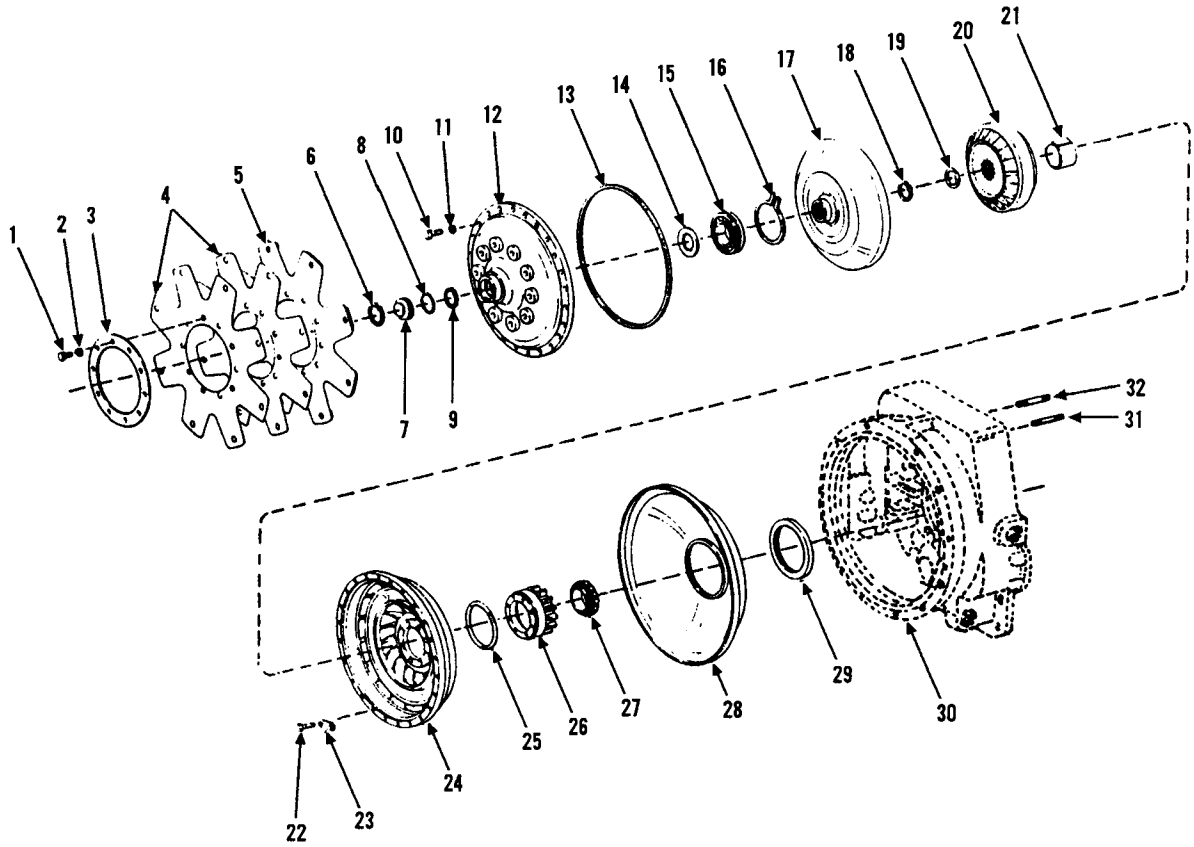

Item	Part No.	Qty.	Description Of Part
1	8820-1033	10	HEX HD CAPSCREW, 3/8-16X3/4, GR5
2	8855-1011	10	LOCKWASHER, 3/8
3	7710-4044	1	DRIVE PLATE BACKING RING
* 4	7710-4043	2	DRIVE PLATE
* 5	9020-4783	1	DRIVE PLATE ASSY
6	9020-4782	1	BORE PLUG RETAINING RING
7	7710-4040	1	BORE PLUG
8	7710-4039	1	O-RING
9	7710-4032	1	TURBINE RETAINING RING
10	7710-4046	24	HEX HD CAPSCREW & LOCK WASHER ASSY, (includes item 11)
11		24	LOCKWASHER, (included with item 10)
12	9020-4779	1	IMPELLER COVER
13	7710-4037	1	O-RING
14	7710-4036	1	BEARING RETAINING WASHER
15	7710-4035	1	TRUBINE HUB BEARING
16	7710-4034	1	BEARING LOCATING RING

Item	Part No.	Qty.	Description Of Part
17	7710-4033	1	TURBINE
18	7710-4032	1	TURBINE RETAINING RING
19	7710-4031	1	RETAINING RING
20	9104-4048	1	REACTION MEMBER
21	9020-6387	1	SPACER
22	8820-1352	8	HEX HD CAPSCREW, 3/8-24X3/4, GR5
23	7710-4027	4	LOCK TAB
24	9020-4767	1	IMPELLER
25	7710-4012	1	O-RING
26	9020-6386	1	IMPELLER HUB GEAR
27	9020-6385	1	IMPELLER HUB GEAR BEARING
28	9020-4756	1	OIL BAFFLE ASSY
29	9020-4755	1	OIL SEAL
30		Ref	CONVERTER HOUSING, (see page 6-4 for details)
31	9020-6378	1	PUMP MOUNTING STUD
32	9020-6379	1	PUMP MOUNTING STUD

** Revised part number on items 4 and 5.*

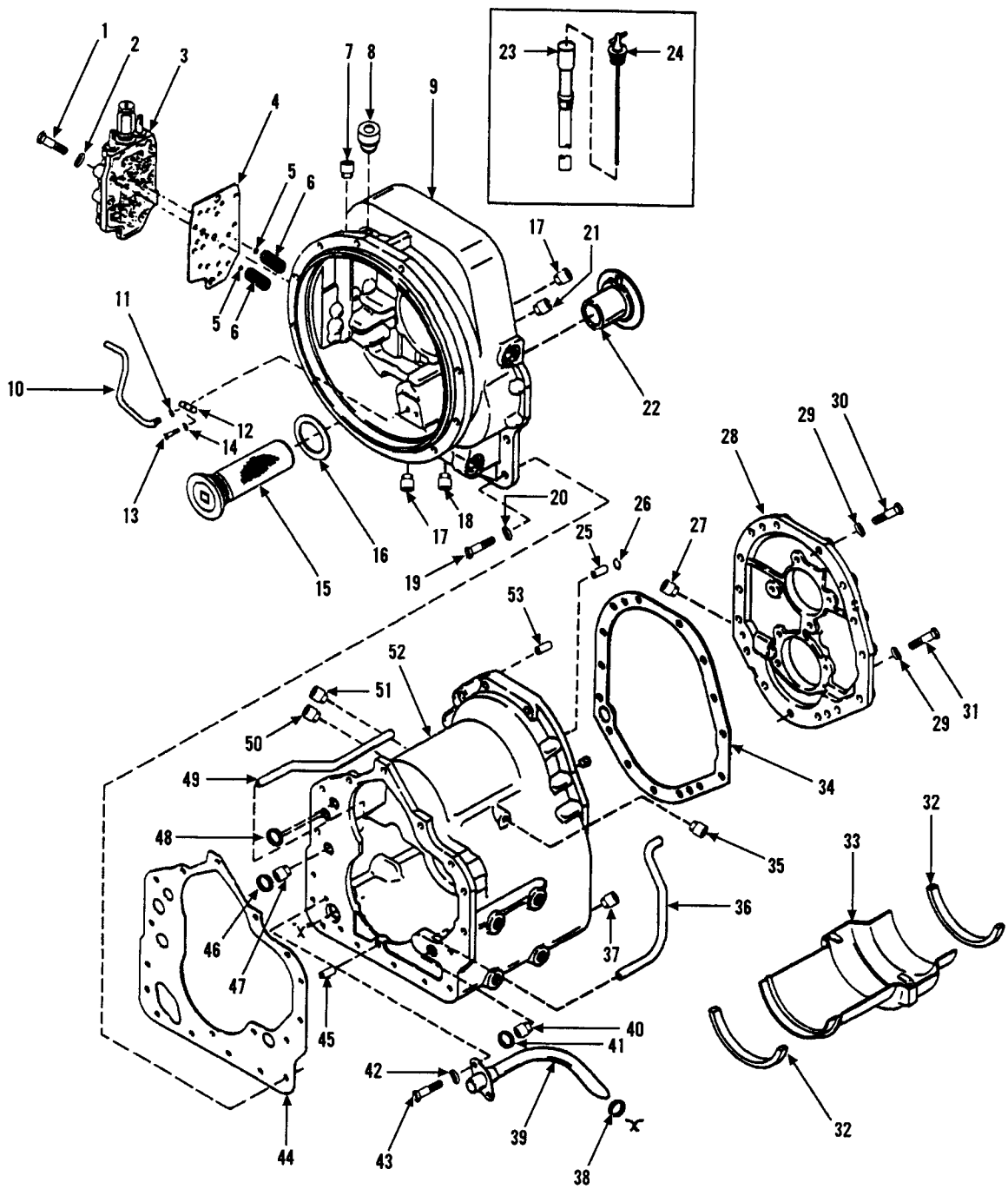
1
2
3
4
5
6
7
8
9
10
11
12
13
14
15
16
17
18
19
20
21
22
23
24
25
26
27
28
29
30
31
32
33
34
35
36
37
38
39
40
41
42
43
44
45
46
47
48
49
50
51
52
53

Item	Part No.	Qty.	Description Of Part
1	8820-1046	9	HEX HD CAPSCREW, 3/8-16X3-3/4, GR5
2	8855-1011	9	LOCK WASHER, 3/8
3		Ref	MODULATOR VALVE ASSY (see page 6-10 for details)
4	7710-4283	1	GASKET
5	7710-4284	2	DETENT BALL
6	7710-4285	2	DETENT SPRING
7	7710-4112	1	PIPE PLUG
8	7710-4096	1	AIR BREATHER
9	9103-4246	1	CONVERTER HOUSING ASSY (includes items 10 thru 14)
10	9104-4050	1	LUBE BYPASS TUBE
11	9104-4051	1	O-RING
12	9104-4052	1	TUBE CLIP
13	7710-4102	1	HEX HD CAPSCREW
14	7710-4103	1	LOCKWASHER
15	9020-4800	1	SCREEN ASSY
16	9020-4799	1	SCREEN GASKET
17	9002-7267	2	PIPE PLUG
18	7710-4116	1	PIPE PLUG
19	7710-4086	16	HEX HD CAPSCREW
20	7710-4085	16	LOCKWASHER
21	7710-4116	1	PIPE PLUG
22	7710-4097	1	CONVERTER HOUSING SLEEVE
23	9020-4823	1	DIPSTICK TUBE
24	9020-4824	1	DIPSTICK
25	7710-4109	1	TUBE SLEEVE
26	7710-4111	1	O-RING
27	7710-4116	1	PIPE PLUG
28	9020-4798	1	COVER & PLUG ASSY (includes item 27)

Item	Part No.	Qty.	Description Of Part
29	7710-4085	15	LOCKWASHER
30	8820-1053	9	HEX HD CAPSCREW, 7/16-14X1-3/4, GR5
31	7710-4086	6	HEX HD CAPSCREW
32	9020-4806	2	OIL BAFFLE SEAL
33	9020-4807	1	OIL BAFFLE
34	9020-4802	1	GASKET
35	7710-4112	2	PIPE PLUG
36	9020-4804	1	CLUTCH LUBE TUBE
37	7710-4119	1	MAGNETIC DRAIN PLUG
38	7710-4057	1	O-RING
39	9020-4809	1	SUCTION TUBE ASSY
40	7710-4107	1	TUBE SLEEVE
41	7710-4111	1	O-RING
42	8855-1010	2	LOCKWASHER, 5/16
43	8820-1017	2	HEX HD CAPSCREW, 5/16-18X5/8, GR5
44	7710-4098	1	GASKET
45	7710-4113	1	DOWEL PIN
*46	7710-4111	1	O-RING
47	7710-4109	1	TUBE SLEEVE
48	7710-4048	2	O-RING
49	7710-4110	1	LOW SPEED CLUTCH PRESSURE TUBE
50	7710-4112	1	PIPE PLUG
51	7710-4118	1	PIPE PLUG
52	9020-4817	1	TRANSMISSION CASE ASSY (includes items 25, 32, 33, 36, 38, 39, 40, 42, 43, 47, 49)
53	7710-4113	2	DOWEL PIN

CONVERTER HOUSING ATTACHING PARTS

Starting Serial No. 8344001L
Revised 7-1-99

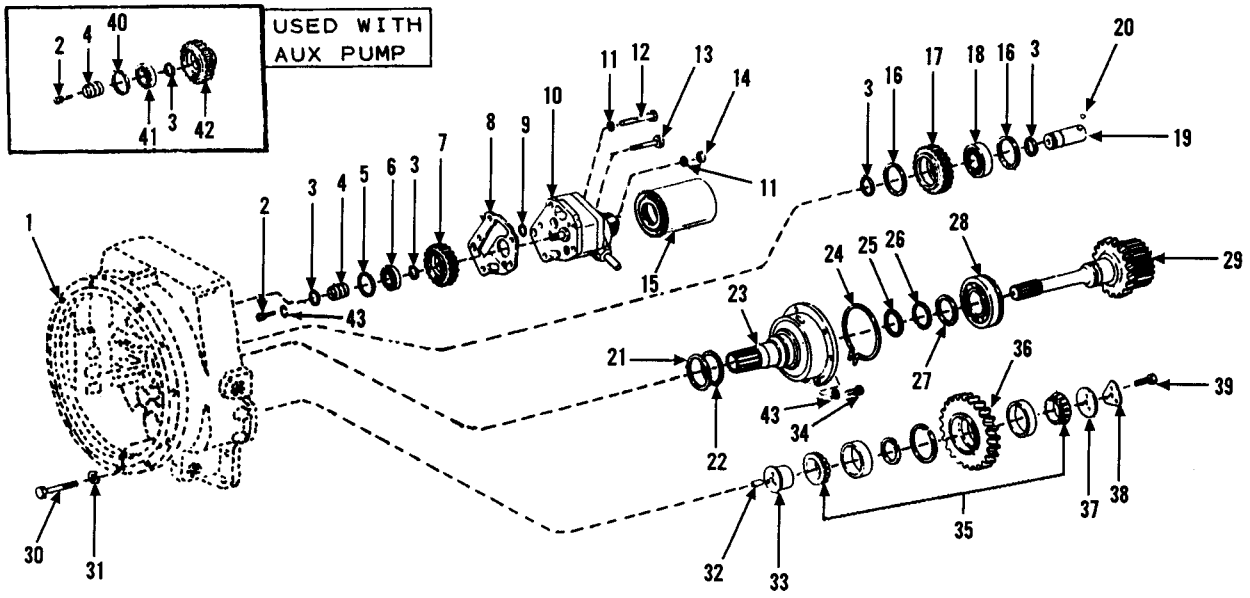

Item	Part No.	Qty.	Description Of Part
1		Ref	CONVERTER HOUSING (see page 6-4 for details)
2	8820-1036	AR	HEX HD CAPSCREW,3/8-16X1-1/4, GR5
3	9020-4733	AR	BEARING LOCATING RING
4	9020-4734	AR	PUMP DRIVE BEARING SUPPORT
5	9020-4735	1	BEARING RETAINING RING
6	9020-4793	1	PUMP DRIVE GEAR BEARING
7	9020-4737	1	PUMP DRIVE GEAR
8	9020-4730	1	GASKET
9	7710-4048	1	O-RING
10	9020-4731	1	CHARGING PUMP ASSY
	9103-4331	1	CHARGE PUMP SEAL KIT
11	7710-4085	3	LOCKWASHER
12	9002-8641	1	HEX HD CAPSCREW
13	8820-1062	2	HEX HD CAPSCREW, 7/16-14X4, GR5
14	7710-4204	2	HEX NUT
15	9020-4732	1	FILTER
16	7710-4181	2	BEARING RETAINING RING
17	9020-4740	1	IDLER GEAR
18	9020-4741	1	IDLER STUB SHAFT BEARING
19	9020-4738	1	IDLER GEAR SHAFT
20	9020-5047	1	LOCK BALL

Item	Part No.	Qty.	Description Of Part
21	9020-6377	1	PISTON RING
22	7710-4016	1	PISTON RING EXPANDER SPRING
23	9020-6376	1	STATOR SUPPORT
24	9020-4749	1	SNAP RING
25	9020-4748	1	PISTON RING
26	7710-4164	1	BEARING RETAINING RING
27	7710-4197	1	BEARING LOCATING WASHER
28	9104-4053	1	TURBINE SHAFT WASHER
29	9104-4054	1	HUB ASSY
30	7710-4250	3	HEX HD CAPSCREW
31	7710-4085	3	LOCKWASHER
32	7710-4253	1	IDLER SHAFT PIN
33	7710-4254	1	REVERSE IDLER SHAFT
34	8820-1035	6	HEX HD CAPSCREW, 3/8-16X1, GR5
35	7710-4255	1	BEARING ASSY
36	9020-6382	1	REVERSE IDLER GEAR
37	7710-4257	1	BEARING RETIANING PLATE
38	7710-4258	1	LOCK PLATE
39	9020-6384	3	HEX HD CAPSCREW
40	9020-4787	1	BEARING RETAINING RING
41	9020-4788	1	AUXILIARY PUMP GEAR BEARING
42	9020-4790	1	AUXILIARY PUMP DRIVE GEAR
43	8855-1011	AR	LOCKWASHER, 3/8

CLUTCH and GEAR GROUP (reverse, 2nd and low)

Starting Serial No. 8344001L
Revised 7-1-99

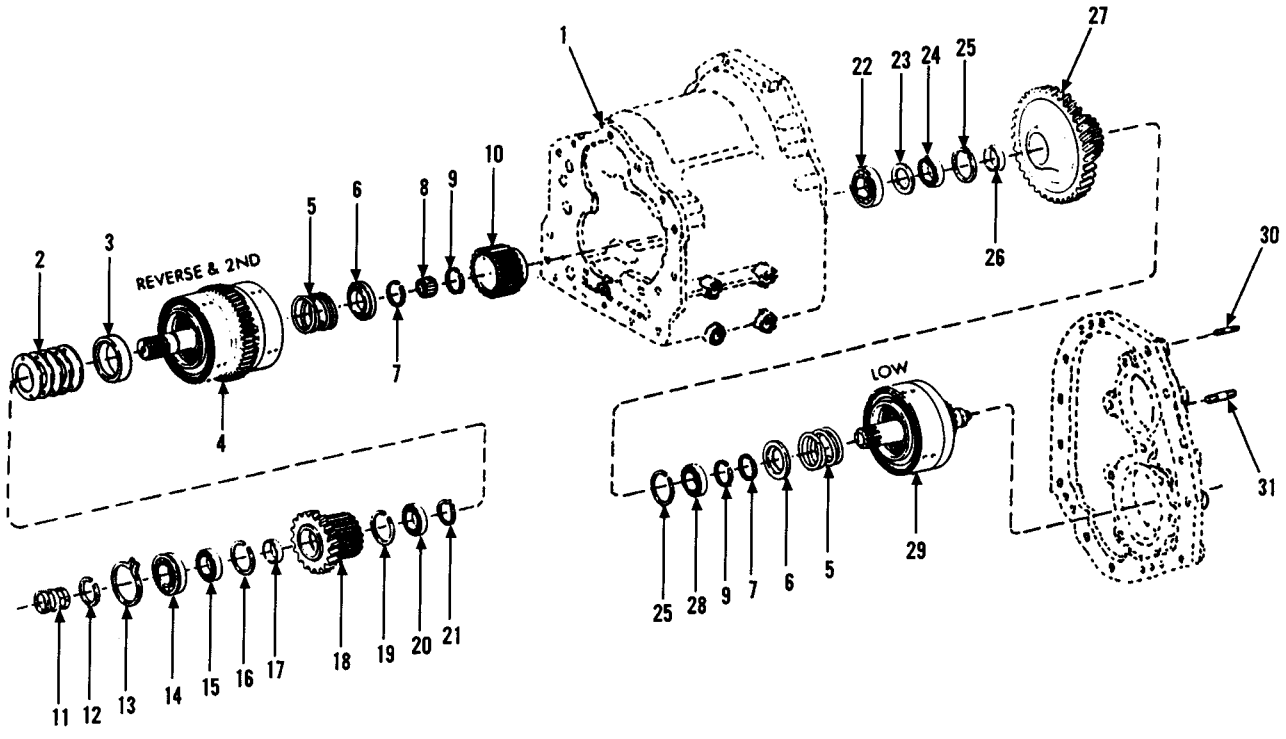

Item	Part No.	Qty.	Description Of Part
1		Ref	TRANSMISSION CASE ASSY (see page 6-4 for details)
2	7710-4207	5	PISTON RETURN SPRING
3	7710-4208	1	RETURN SPRING SPACER
4		Ref	REVERSE & 2ND SHAFT DRUM & PLUG ASSY (see page 6-8 for details)
5	7710-4187	1	PISTON RETURN SPRING
6	7710-4186	2	SPRING RETAINER
7	7710-4185	2	SNAP RING
8	7710-4231	1	REVERSE & 2ND SHAFT REAR BEARING
9	7710-4184	2	RETAINING RING
10	7710-4232	1	CLUTCH DISC HUB
11	7710-4219	3	PISTON RING
12	7710-4220	1	RETAINING RING
13	7710-4221	1	SNAP RING
14	7710-4222	1	REVERSE & 2ND SHAFT FRONT BEARING
15	7710-4223	1	CLUTCH DRIVER GEAR BEARING

Item	Part No.	Qty.	Description Of Part
16	7710-4224	1	RETAINING RING
17	7710-4225	1	SPACER
18	7710-4226	1	REVERSE CLUTCH GEAR & HUB ASSY
19	7710-4224	1	RETAINING RING
20	7710-4227	1	CLUTCH DRIVEN GEAR BEARING
21	7710-4206	1	SNAP RING
22	7710-4158	1	LOW SPEED SHAFT FRONT BEARING
23	7710-4179	1	SPACER
24	7710-4180	1	LOW SPEED GEAR BEARING
25	7710-4181	2	LOCATING RING
26	7710-4182	1	SPACER
27	9020-4874	1	LOW GEAR & HUB ASSY
28	7710-4180	1	LOW SPEED GEAR BEARING
29		Ref	LOW CLUTCH DRUM & BLEED VALVE ASSY (see page 6-8 for details)
30	7710-4177	4	BEARING CAP STUD
31	7710-4203	4	BEARING CAP STUD

CLUTCH and GEAR GROUP (forward, output and 3rd)

Starting Serial No. 8344001L
Revised 7-1-99

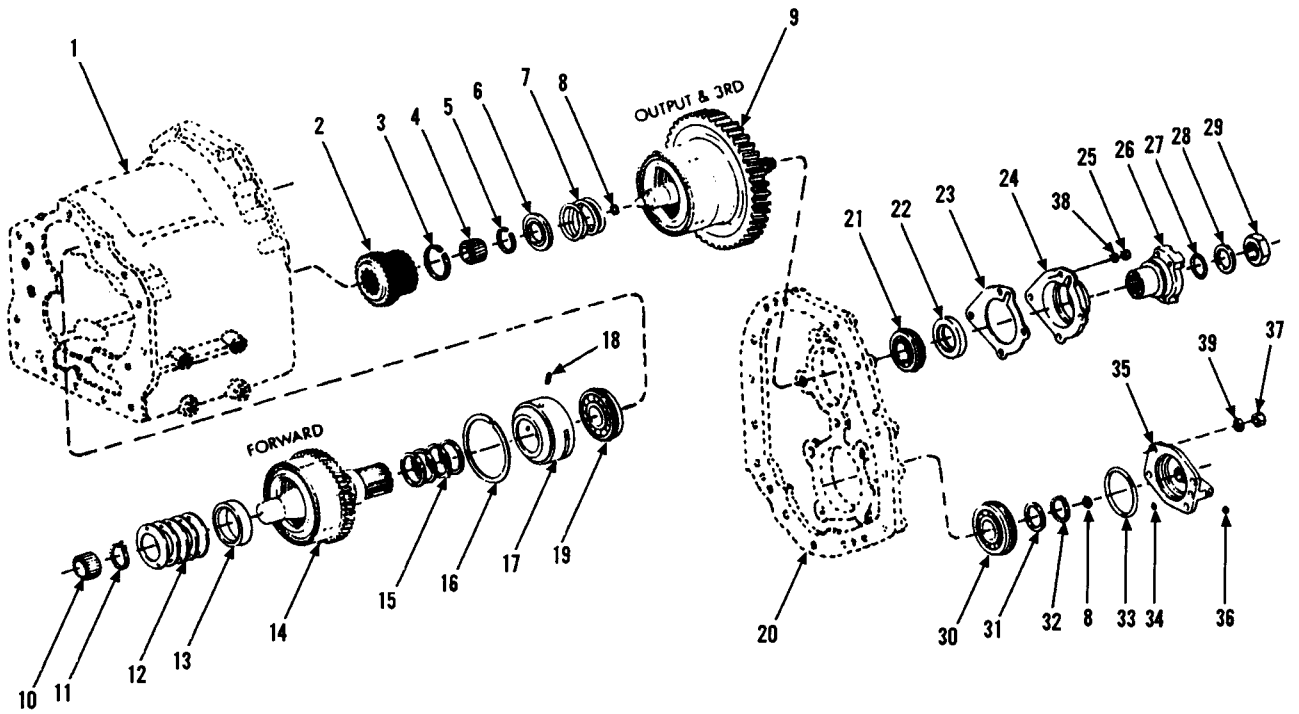

Item	Part No.	Qty.	Description Of Part
1		Ref	TRANSMISSION CASE ASSY (see page 6-4 for details)
2	9020-4866	1	THIRD GEAR & HUB ASSY
3	9020-4864	1	RETAINING RING
4	9020-4862	1	PILOT BEARING
5	7710-4185	1	SNAP RING
6	7710-4186	1	SPRING RETAINER
7	7710-4187	1	PISTON RETURN SPRING
8	7710-4198	1	PISTON RING
9		Ref	OUTPUT SHAFT & 3RD CLUTCH ASSY (see page 6-8 for details)
10	7710-4205	1	SHAFT PILOT BEARING
11	7710-4206	1	SNAP RING
12	7710-4207	5	PISTON RETURN SPRING
13	7710-4208	1	SPACER
14		Ref	FOWARD SHAFT DRUM & PLUG ASSY (see page 6-8 for details)
15	7710-4211	4	PISTON RING
16	7710-4212	1	RETAINER RING
17	7710-4213	1	PISTON RING SLEEVE
18	7710-4214	1	ROLL PIN
19	7710-4215	1	FOWARD SHAFT BEARING

Item	Part No.	Qty.	Description Of Part
20		Ref	COVER & PLUG ASSY (see page 6-4 for details)
21	9020-4829	1	OUTPUT SHAFT BEARING
22	9020-4831	1	OIL SEAL
23	9020-6394	1	GASKET
24	9020-6395	1	CAP
25	7710-4142	4	HEX NUT
26	9020-6396	1	OUTPUT FLANGE
27	7710-4128	1	O-RING
28	7710-4088	1	FLANGE WASHER
29	7710-4087	1	FLANGE NUT
30	9020-4842	1	LOW SPEED SHAFT BEARING
31	7710-4197	1	BEARING SUPPORT WASHER
32	7710-4184	1	BEARING RING
33	7710-4202	1	O-RING
34	7710-4199	1	O-RING
35	9020-4851	1	REAR BEARING CAP & PLUG ASSY (includes item 36)
36	7710-4201	1	PIPE PLUG
37	7710-4204	4	HEX NUT
38	7710-4143	4	LOCKWASHER
39	7710-4085	4	LOCKWASHER

CLUTCH ASSEMBLIES

Starting Serial No. 8344001L
Revised 7-1-99

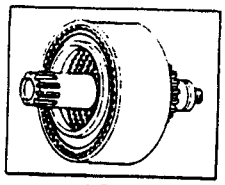

LOW

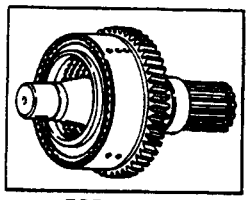

FORWARD

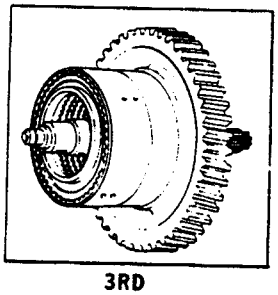

3RD

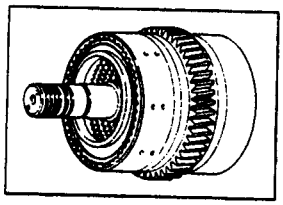

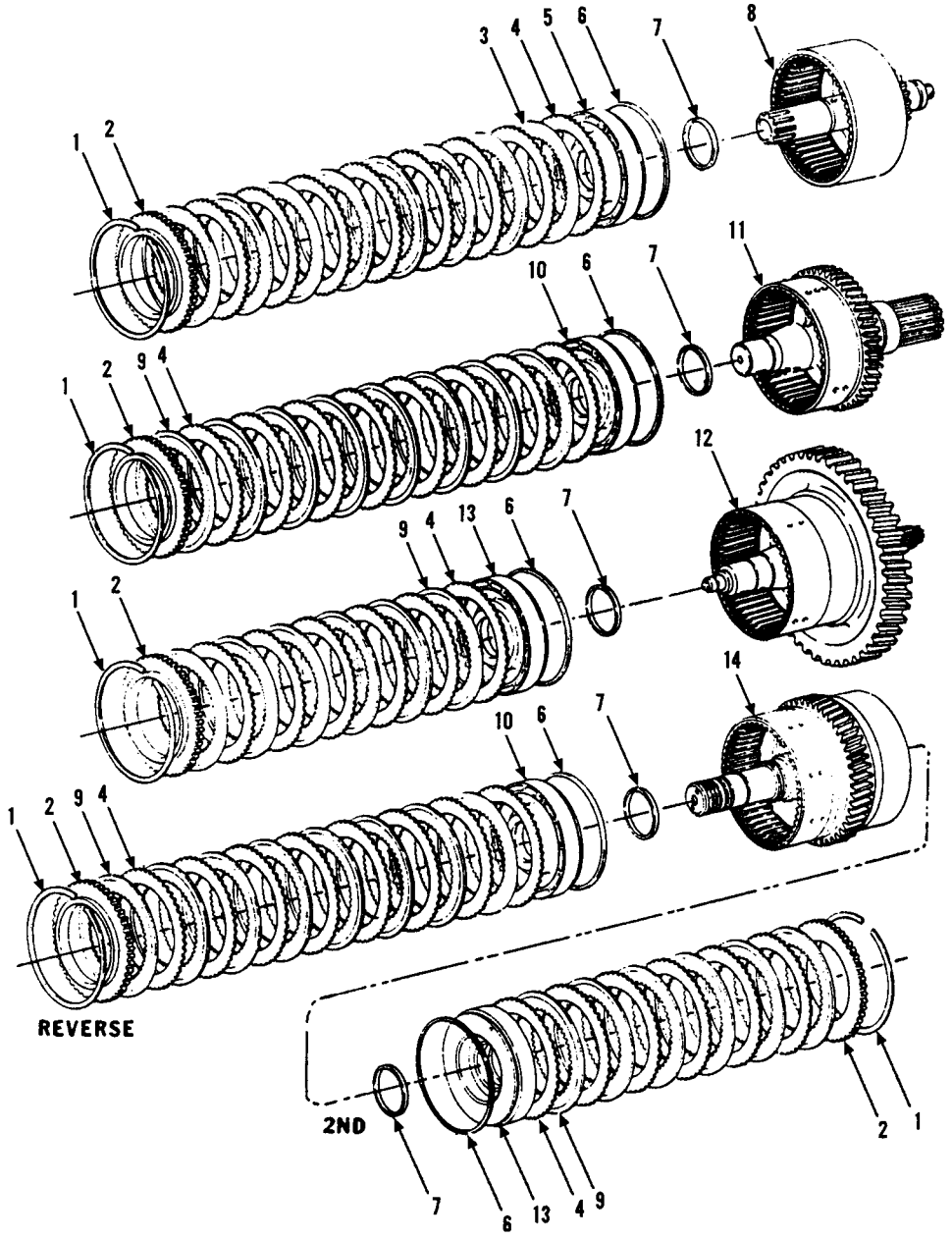

Item	Part No.	Qty.	Description Of Part
1	7710-4188	5	SNAP RING
2	7710-4189	5	CLUTCH DISC BREAKING PLATE
3	7710-4190	8	CLUTCH INNER DISC (low)
4	7710-4191	36	CLUTCH OUTER DISC
5	7710-4192	1	CLUTCH PISTON (low)
6	7710-4193	5	OUTER CLUTCH PISTON RING
7	7710-4194	5	INNER CLUTCH PISTON SEAL
8	9020-4935	1	LOW CLUTCH SHAFT, DRUM & BLEED VALVE ASSY
9	7710-4209	28	CLUTCH INNER DISC (foward, 3rd, reverse & second)

Item	Part No.	Qty.	Description Of Part
10	9020-4938	2	CLUTCH PISTON (foward, reverse & 2nd)
11	9020-4939	1	FORWARD SHAFT, DRUM & PLUG ASSY
12	9020-6403	1	THIRD CLUTCH SHAFT, DRUM & PLUG ASSY
13	7710-4230	2	CLUTCH PISTON (3rd & 2nd)
14	9020-4944	1	REVERSE & 2ND SHAFT, DRUM & PLUG ASSY

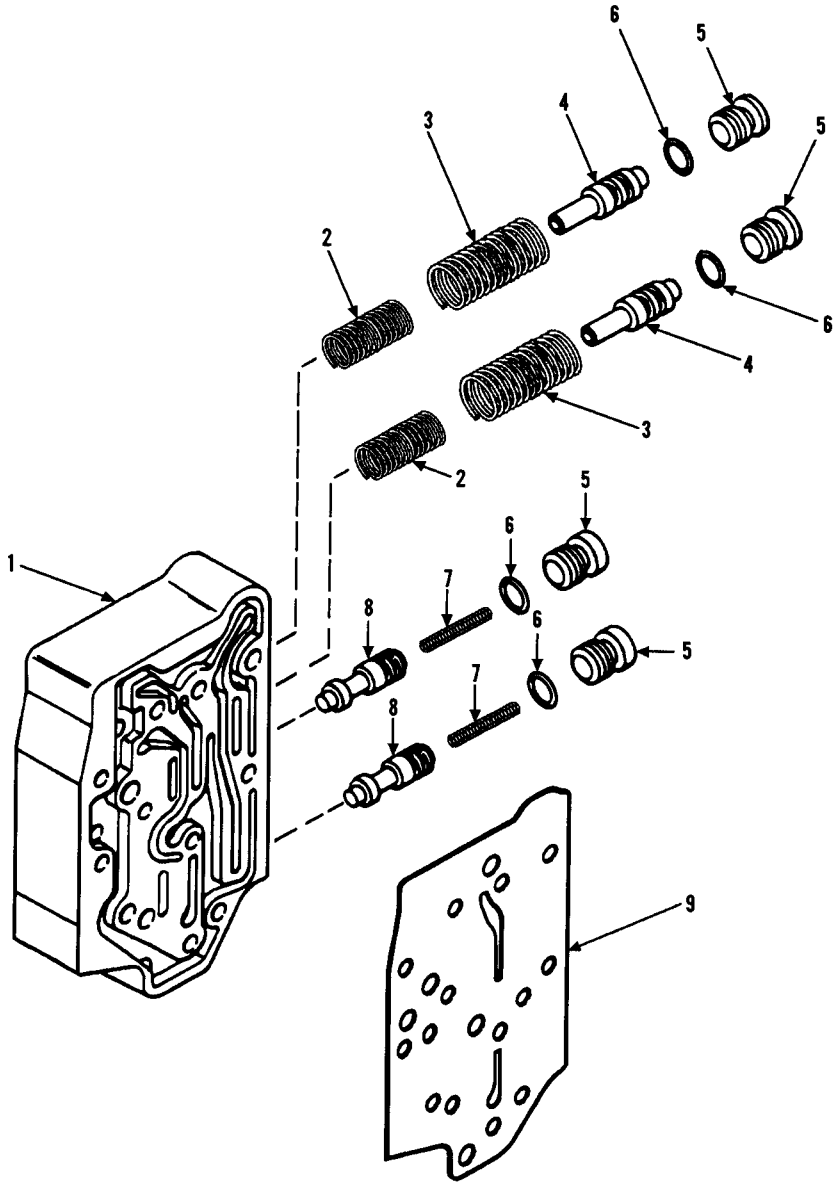

Item	Part No.	Qty.	Description Of Part
	9020-4990	1	MODULATOR VALVE (includes all items)
1	NSS	1	VALVE HOUSING
2	9020-4991	2	ACCUMULATOR SPRING (inner)
3	9020-4992	2	ACCUMULATOR SPRING (outer)
4	NSS	2	VALVE
5	9020-5057	4	SPOOL STOP PLUG (includes item 6)
6	9020-5056	4	O-RING
7	9020-4822	2	REGULATOR SPRING
8	NSS	2	REGULATOR SPOOL
9	9020-4820	1	GASKET, VALVE TO HOUSING

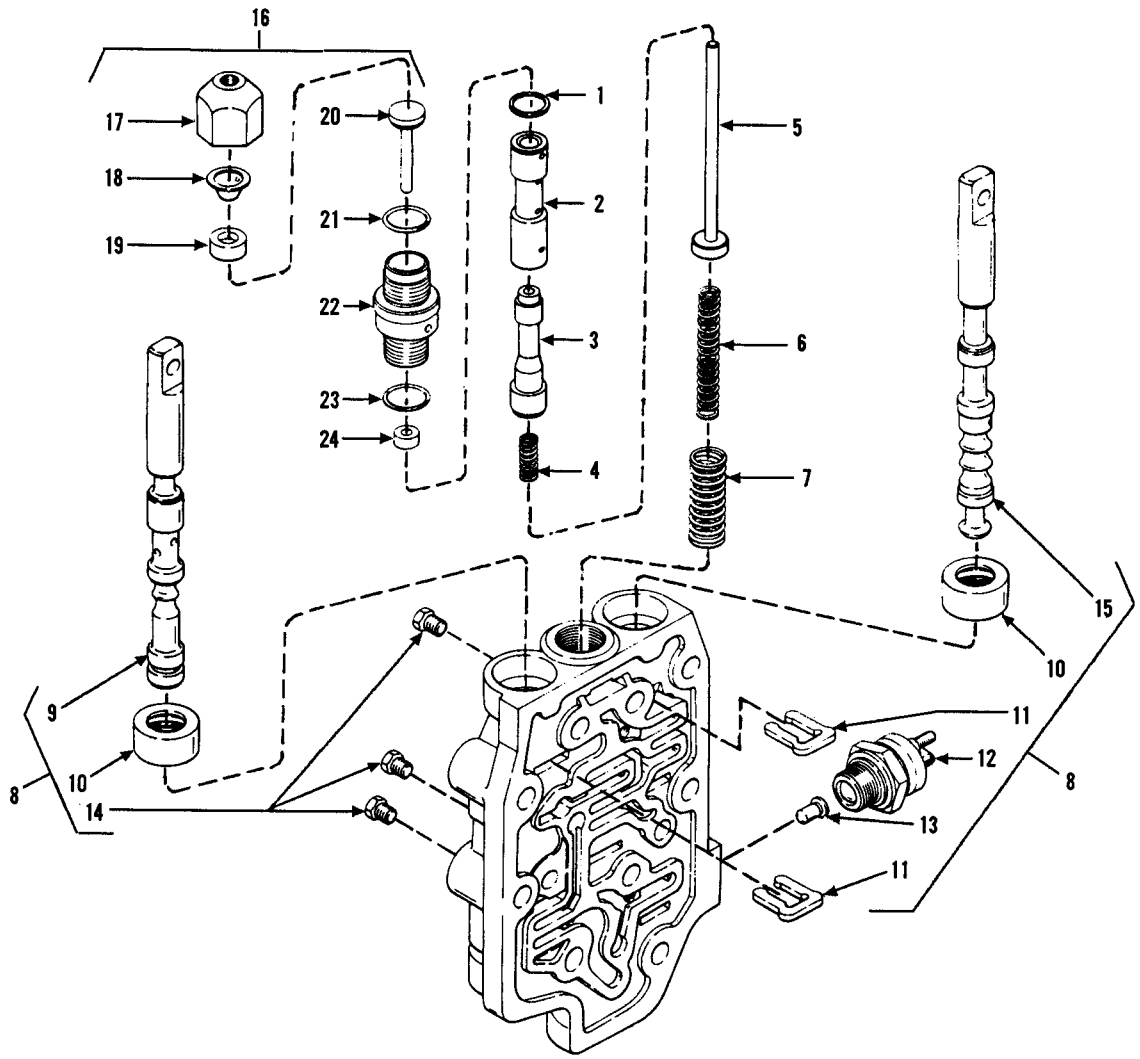

Item	Part No.	Qty.	Description Of Part
	9020-4988		CONTROL VALVE (includes all items)
1	9020-4957	1	RETAINING RING
2	9020-4959	1	INCHING VALVE SLEEVE
3	9020-4960	1	VALVE SPOOL
4	9020-4962	1	BALANCING SPRING
5	9020-4964	1	ROD
6	9020-4966	1	RETURN SPRING (inner)
7	9020-4968	1	RETURN SPRING (outer)
8	7710-4272	1	VALVE HOUSING (consists of items 9 thru 15)
9	7710-4273	1	SPEED SELECTOR SPOOL & PLUG ASSY
10	9020-4971	1	OIL SEAL
11	7710-4277	2	SPOOL STOP
12	7710-4278	1	NEUTRAL SWITCH
13	7710-4279	1	SWITCH ACTUATING PIN
14	9002-6763	3	PIPE PLUG 1/8-27 NPTF
15	7710-4276	1	FORWARD & REVERSE SPOOL

Item	Part No.	Qty.	Description Of Part
16	9020-4955	1	INCHING SLAVE CYLINDER ASSY (consists of items 17 thru 24)
17	9020-4980	1	CAP
18	9020-4981	1	PISTON CUP STOP
19	9020-4982	1	PISTON CUP
20	9020-4983	1	PISTON
21	9020-5058	1	O-RING
22	9020-4984	1	PISTON HOUSING & FILTER DISC ASSY
23	8859-1013	1	O-RING
24	9020-4986	1	OIL SEAL
			NOTE: FIELD SERVICE OF ITEM 12 NEUTRAL SWITCH REQUIRES REMOVAL & REPLACEMENT OF STUDS WITH 2 PAN HEAD SCREWS. GRADALL PART NO. 8998-1036.

DRIVE SHAFT

Starting Serial No. 8744115G
Also Machine S/N 8744079G
Original Issue 4-87
Revised 7-1-99

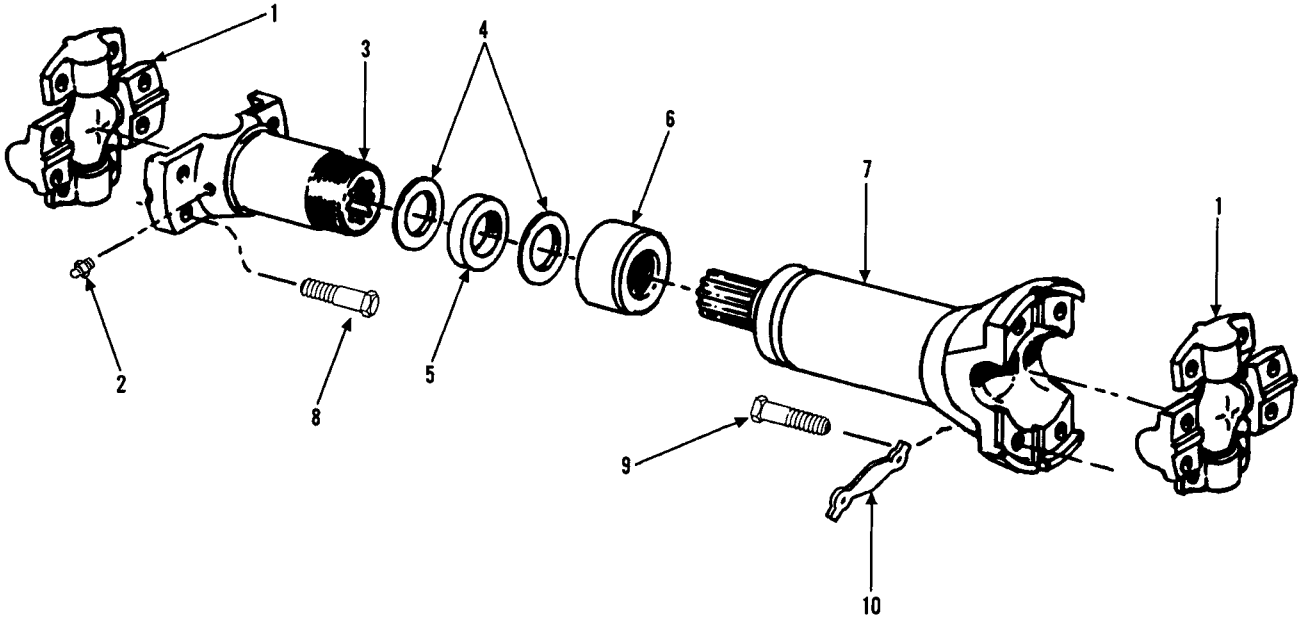

Item	Part No.	Qty.	Description Of Part
	9104-3032	1	DRIVE SHAFT ASSY (includes all items)
1	9020-1058	2	SPIDER & BEARING ASSY
2	8867-1008	1	LUBE FITTING - STRAIGHT - 1/8
3	9104-4008	1	SLIP YOKE ASSY (includes items 4, 5 & 6)
4	9020-6545	2	WASHER
5	9020-6546	1	FELT SEAL
6	9020-6544	1	CAP
7		1	TUBE ASSY
8	9104-4009	8	HEX HD CAPSCREW
9	9104-4010	8	HEX HD CAPSCREW
*10	9103-1194	8	LOCKSTRAP
			NOTE: ONLY ITEMS WITH PART NUMBERS ARE AVAILABLE FOR SERVICE

DRIVE SHAFT

Starting Serial No. 8344001L
thru Serial No. 8744114G
Excluding Serial No. 8744079G
Revised 7-1-99

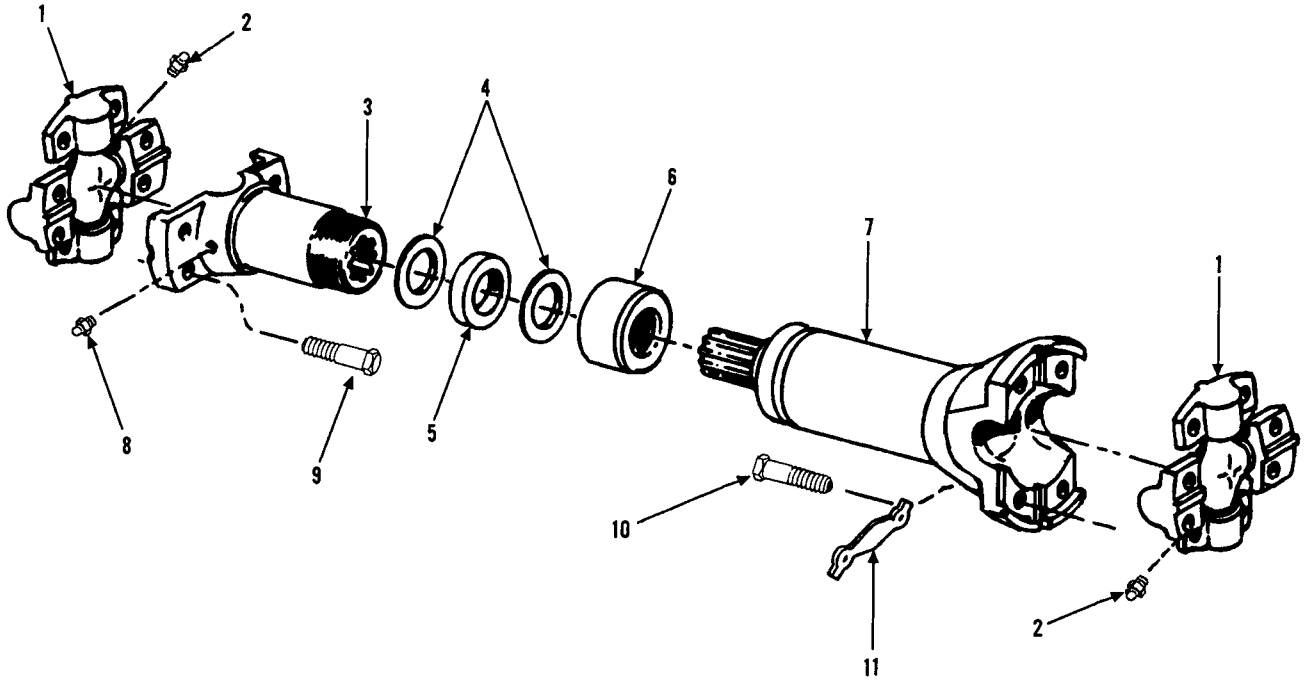

Item	Part No.	Qty.	Description Of Part
	9103-3126	1	DRIVE SHAFT (Perkins)
	9080-1286	1	DRIVE SHAFT (Waukesha) (includes items 1 thru 10)
1	9020-1058	2	SPIDER and BEARING ASSEMBLY
2	8867-1008	2	LUBE FITTING - STRAIGHT 1/4-28
3	9020-6543	1	SLIP YOKE
4	9020-6545	2	WASHER
5	9020-6546	1	FELT SEAL
6	9020-6544	1	CAP
7		1	TUBE ASSEMBLY
8	8867-1001	1	LUBE FITTING - STRAIGHT 1/8
* 9	9003-0029	8	HEX HD CAPSCREW, 3/8-24X1-3/4 GR8
*10	9003-0045	8	HEX HD CAPSCREW, 3/8-24X2-1/4 GR8
*11	9103-1194	8	LOCKSTRAP
*			NOTE: ONLY ITEMS WITH PART NUMBERS ARE AVAILABLE FOR SERVICE.

FRONT AXLE HOUSING

Starting Serial No. 8744115G
Also Machine S/N 8744079G
Original Issue 4-87
Revised 7-1-99

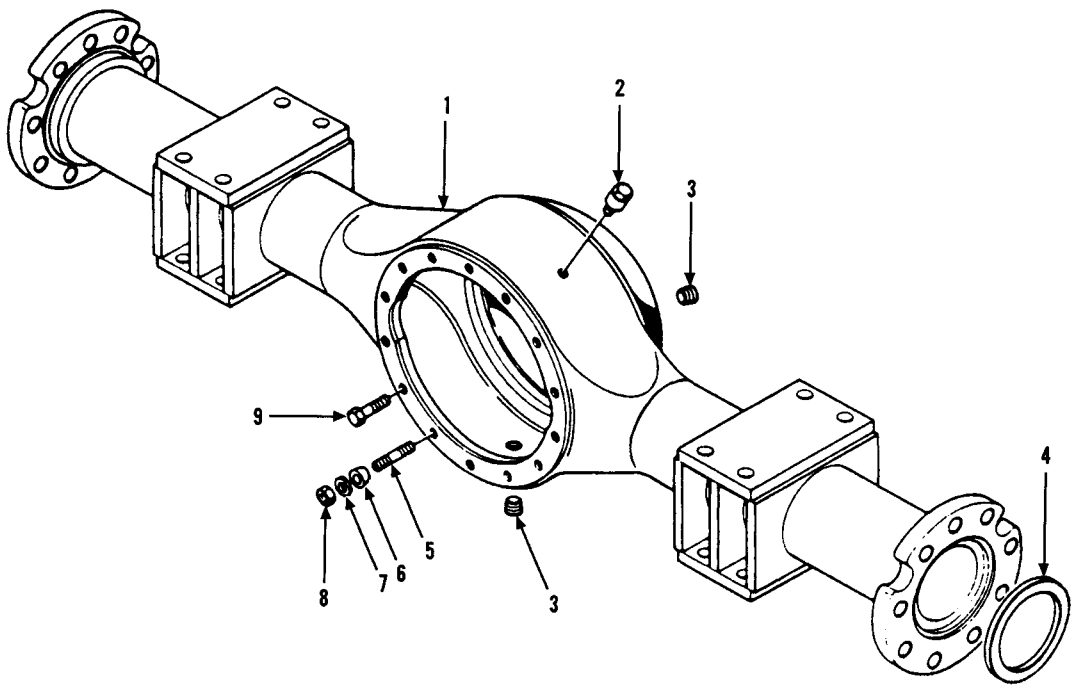

Item	Part No.	Qty.	Description Of Part
1	9104-4137	1	AXLE HOUSING
2	9040-1203	1	BREATHER
3	9040-1204	2	FILLER & DRAIN PLUG
4	9104-4138	2	THRUST WASHER
5	9104-4139	3	STUD
6	9104-4140	3	CENTERING CONE
7	9104-4141	14	FLAT WASHER
8	9104-4142	3	HEX NUT
9	9104-4143	11	HEX HD CAPSCREW

** Changed the page number from 6-12 to 6-11.*

HOUSING ASSEMBLY

Starting Serial No. 8344001L
thru Serial No. 8744114G
Excluding Serial No. 8744079G
Revised 7-1-99

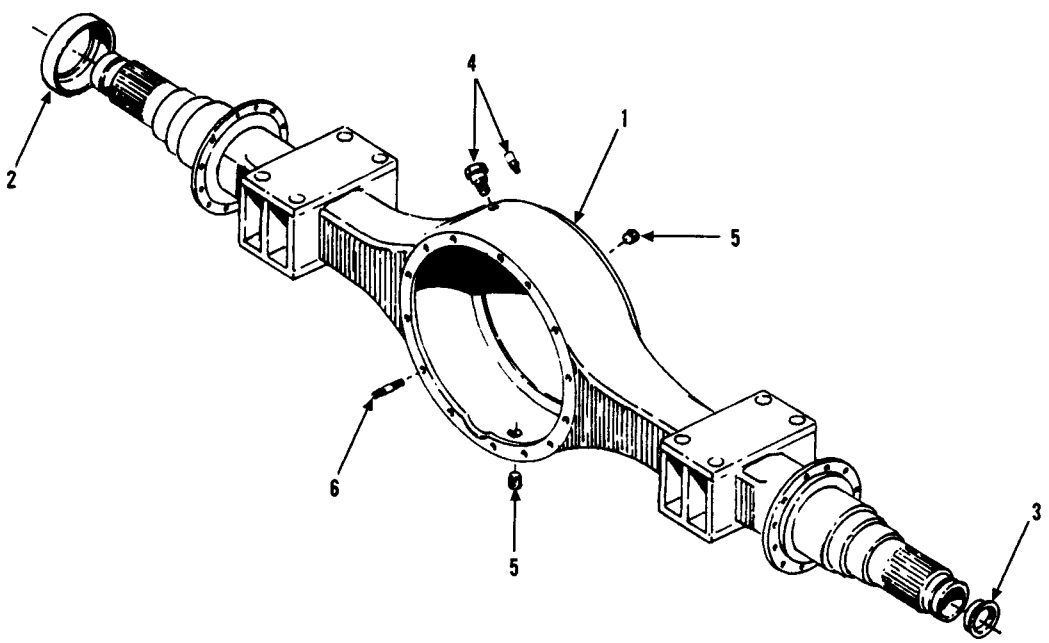

Item	Part No.	Qty.	Description Of Part
1	9020-7907	1	AXLE HOUSING
2	9020-7908	2	OIL SEAL DRIVER
3	9040-1232	2	THRUST SPACER
4	9040-1203	AR	BREATHER (large)
	9103-4078	AR	BREATHER (small)
5	9040-1204	2	OIL PLUG
6	9020-7909	3	STUD M10 X 50
			*NOTE: PLEASE CHECK BREATHER STYLE BEFORE ORDERING ITEM NO. 4 BREATHER.

HOUSING ASSEMBLY

Starting Serial No. 0144658J
Original Issue 7-1-99

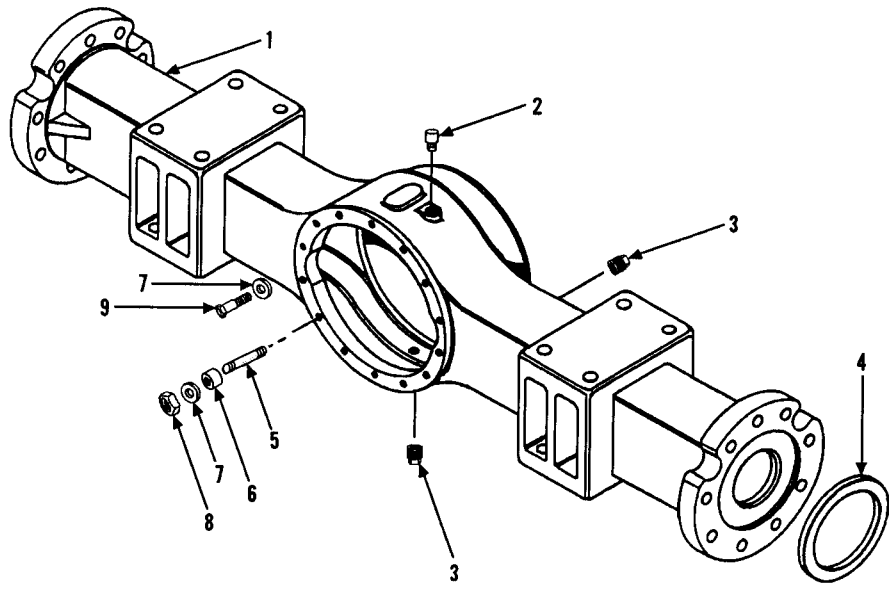

Item	Part No.	Qty.	Description Of Part
	9104-4447	1	DIFFERENTIAL CARRIER FASTENING SET (includes items 5 thru 9)
1	9104-4444	1	AXLE HOUSING
2	9104-4445	1	BREATHER
3	9104-4446	2	FILLER & DRAIN PLUG
4	9104-4138	2	THRUST WASHER
5	9104-4139	3	STUD
6	9104-4140	3	CENTERING CONE
7	9104-4141	14	FLAT WASHER
8	9104-4142	3	HEX NUT
9	9104-4143	11	HEX HD CAPSCREW

** Changed the page number from 6-12 to 6-11.*

FRONT AXLE ASSEMBLY

Starting Serial No. 8744114G
Also Machine S/N 8744079G
Original Issue 4-87
Revised 7-1-99

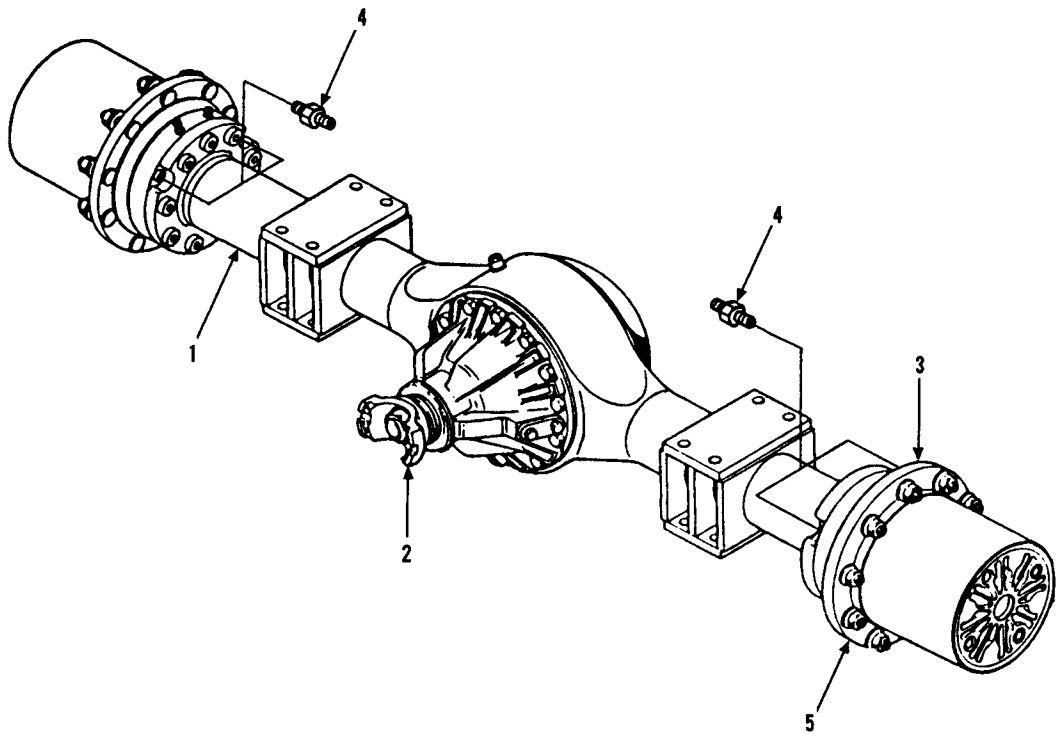

Item	Part No.	Qty.	Description Of Part
	9104-3071	Ref	FRONT AXLE ASSY (includes items 1 thru 4)
* 1	9104-4137	1	AXLE HOUSING ASSY (see page 6-12 for details)
* 2	9104-4144	1	DIFFERENTIAL CARRIER ASSY (see page 6-13 for details)
* 3	9104-4165	1	AXLE SHAFT AND PLANETARY WHEEL END ASSY (see page 6-14 for details)
4	8319-3009	4	FITTING
5	9104-3146	24	LUG NUT

** Changed the page number from 6-12A to 6-11.*

FRONT AXLE ASSEMBLY

Starting Serial No. 0144658J
Original Issue 1-98
Revised 7-1-99

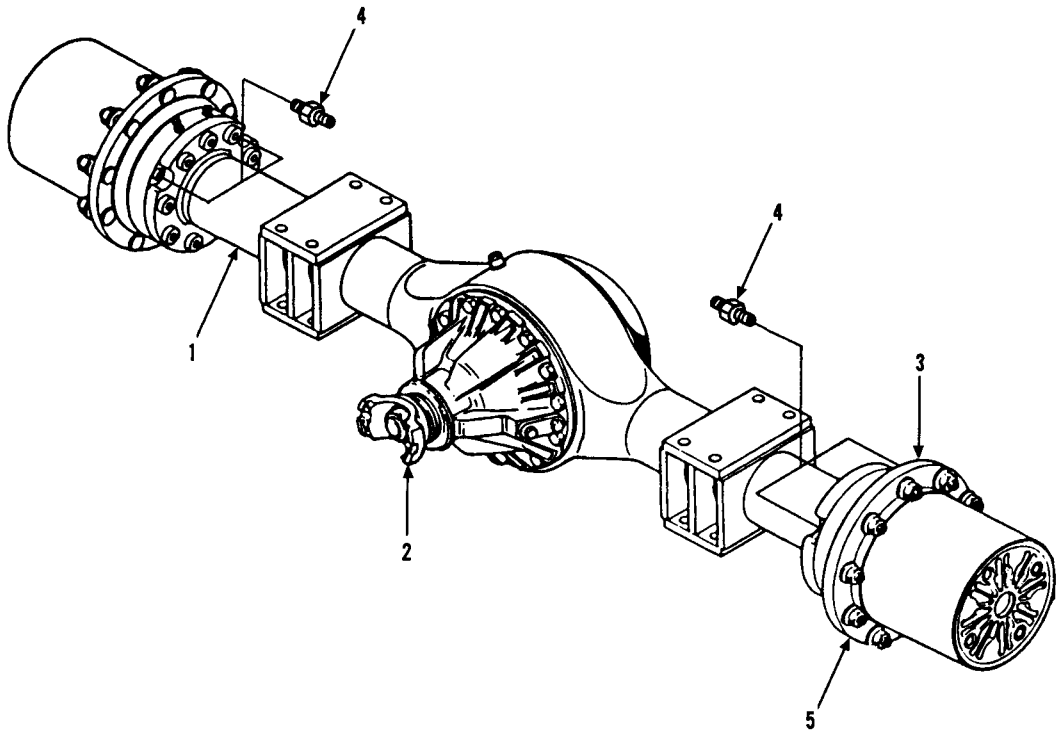

Item	Part No.	Qty.	Description Of Part
	9104-3291	Ref	FRONT AXLE ASSY (includes items 1 thru 4)
1	9104-4444	1	AXLE HOUSING ASSY (see page 6-12 for details)
2	9104-4448	1	DIFFERENTIAL CARRIER ASSY (see page 6-13 for details)
3	9103-4309	1	AXLE SHAFT AND PLANETARY WHEEL END ASSY (see page 6-14 for details)
4	8319-3009	4	FITTING
5	9104-3146	24	LUG NUT (lubricate & torque to 350-400 ft.lbs.)

** Changed the page number from 6-12A to 6-11.*

FRONT AXLE DIFFERENTAIL CARRIER

Starting Serial No. 8744115G
Also Machine S/N 8744079G
Original Issue 4-87
Revised 7-1-99

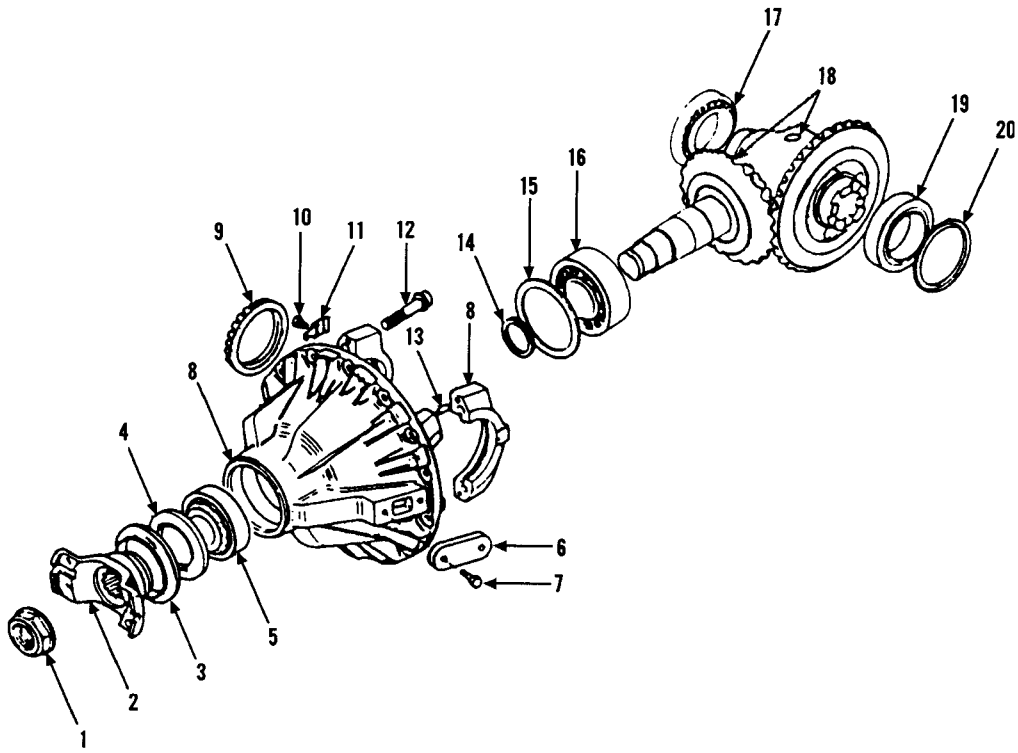

Item	Part No.	Qty.	Description Of Part
	9104-4144	1	DIFFERENTIAL CARRIER ASSY (includes all items)
1	9104-4145	1	PINION NUT
2	9104-4146	1	YOKE ASSY (includes item 3)
3	9104-4147	1	DUST SHIELD
4	9104-4148	1	OIL SEAL
5	9104-4149	1	BEARING ASSY
6	9104-4150	1	COVER PLATE
7	9104-4151	2	HEX HD CAPSCREW
8	9104-4152	1	DIFFERENTIAL HOUSING ASSY (includes items 9 thru 13)
9	9104-4153	1	ADJUSTING NUT
10	9104-4154	1	ADJUSTING NUT LOCK BOLT
11	9104-4155	1	ADJUSTING NUT LOCK
12	9104-4156	4	DIFFERENTIAL CAP BOLT
13	9104-4157	4	LOCATING PIN
14	9104-4158	1	SHIM KIT
15	9104-4159	1	SHIM KIT
16	9104-4160	1	BEARING ASSY
17	9104-4161	1	BEARING ASSY
18	9104-4162	1	DIFFERENTIAL ASSY
19	9104-4163	1	BEARING ASSY
20	9104-4164	1	ADJUSTING SHIM KIT

** Changed the page number from 6-13 to 6-12.*

DIFFERENTIAL CARRIER

Starting Serial No. 8344001L
thru Serial No. 8744114G
Excluding Serial No. 8744079G
Revised 7-1-99

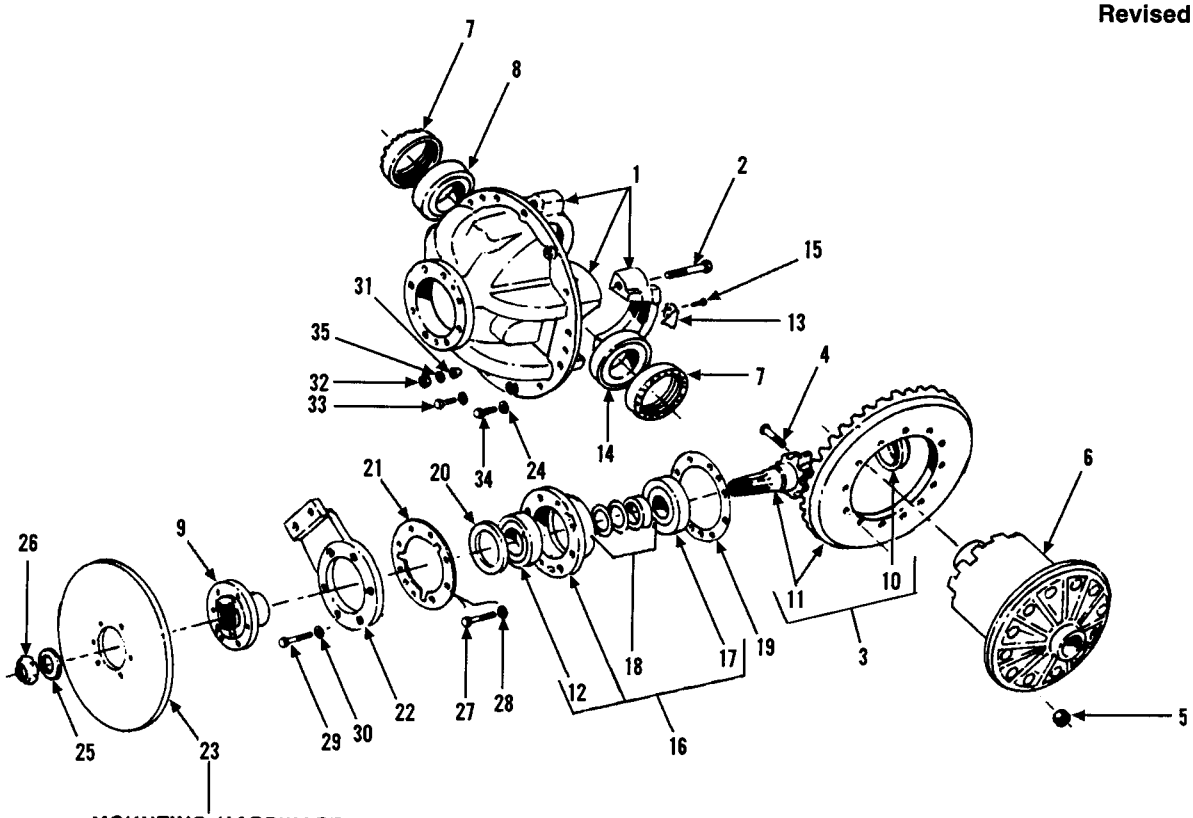

MOUNTING HARDWARE
SEE PAGE 8-4

9021-0079 Dust cap for
item #9 input yoke.

Item	Part No.	Qty.	Description Of Part
	9103-4077	1	DROP UNIT (includes all items except nos. 9 & 22)
1	9020-7910	1	DIFFERENTIAL CARRIER CASE ASSY
2	9020-7911	4	BEARING CAP BOLT
3	9020-7212	1	GEAR SET ASSY 6 X 37 (includes items 10 & 11)
4	9020-7913	12	RING GEAR BOLT
5	9020-7914	12	RING GEAR NUT
6	9020-7915	1	STOP-GLISS ASSY
7	9020-7916	2	DIFFERENTIAL ADJUSTING NUT
8	9020-7917	1	DIFFERENTIAL BEARING
9	9041-0247	1	INPUT YOKE
10	9020-7918	1	NOSE BEARING
11	9020-7919	1	GEAR SET 6 X 37
12	9020-7920	1	BEARING
13	9020-7921	2	DIFFERENTIAL ADJUSTING NUT LOCK
14	9020-7922	1	DIFFERENTIAL BEARING
15	9020-7923	2	BOLT, HM 10 X 1.50 X 20
16	9020-7924	1	BEARING CAGE ASSY (includes items 12, 17, & 18)

Item	Part No.	Qty.	Description Of Part
17	9020-7925	1	BEARING
18	9020-7926	1	SHIM KIT
19	9020-7927	1	SHIM KIT
20	9021-0080	1	PINION SEAL
21	9021-0081	1	GASKET
22	9061-0039	1	BRAKE BRACKET
23	9061-0038	1	BRAKE DISC
24	9040-1294	11	WASHER W-10
25	9020-7932	1	PINION WASHER
26	8348-3419	1	PINION NUT
27	9040-1326	1	BOLT HM 12 X 1.50
28	9040-1288	1	WASHER W-12
29	9020-8133	5	BOLT HM 14 X 1.50
	9020-8134	1	BOLT HM 12 X 1.5
30	9020-3877	5	WASHER W-14
31	9020-7935	3	CENTERING CONE
32	9020-7936	3	NUT
33	9020-7937	2	BOLT HM 10 X 1.50 X 40/20
34	9020-7938	9	BOLT HM 10 X 1.50 X 30/20
35	9020-7939	3	WASHER

FRONT AXLE DIFFERENTAIL CARRIER

Starting Serial No. 0144658J
Original Issue 1-98
Revised 8-13-99

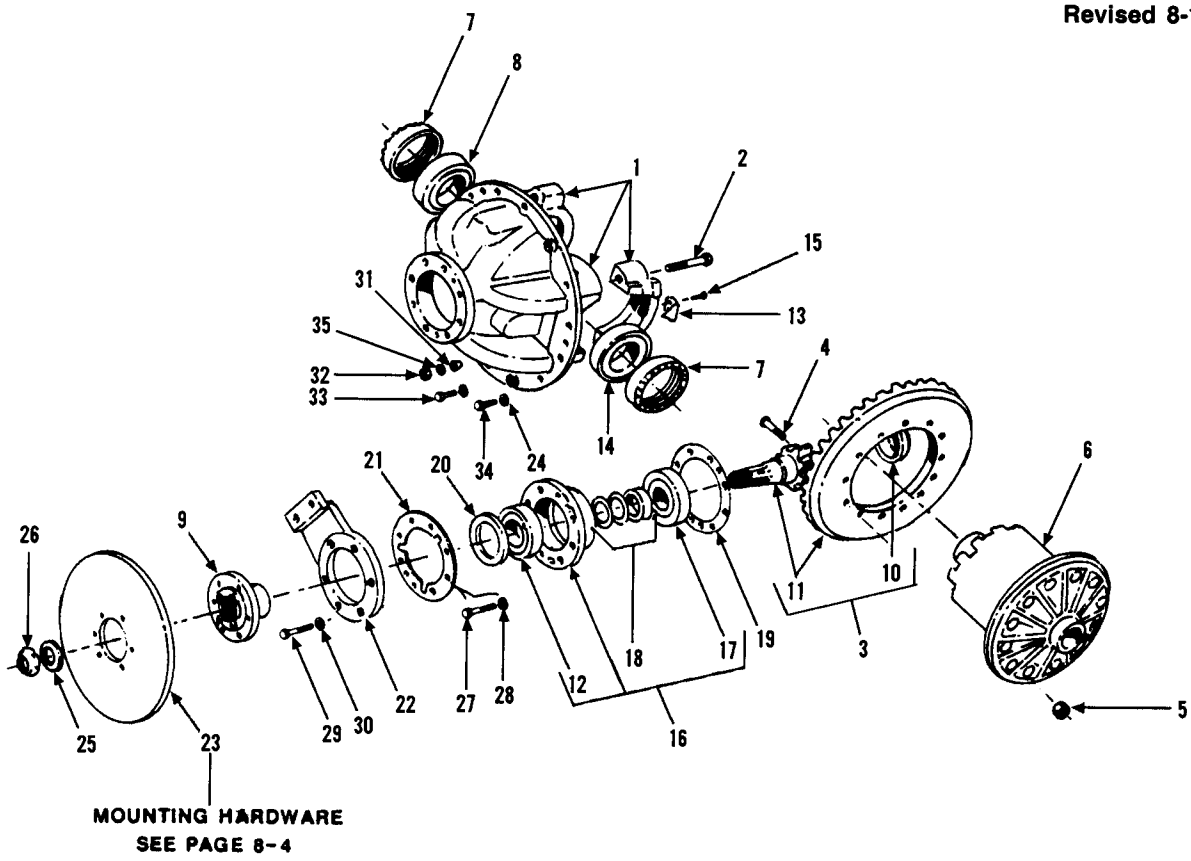

MOUNTING HARDWARE
SEE PAGE 8-4

9021-0079 Dust cap for
item #9 input yoke.

Item	Part No.	Qty.	Description Of Part
	9104-4448	1	DIFFERENTIAL CARRIER ASSY (includes all items)
1	9104-4145	1	PINION NUT
2	9104-4452	1	FLANGE ASSY (includes item 3)
3	9104-4147	1	DUST SHIELD
4	9104-4451	1	OIL SEAL
5	9104-4450	1	TAPER BEARING KIT
6	9104-4150	1	COVER PLATE
7	9104-4151	2	HEX HD CAPSCREW
8	9104-4152	1	DIFFERENTIAL HOUSING ASSY (includes items 9 thru 13)
9	9104-4153	1	ADJUSTING NUT
10	9104-4154	1	ADJUSTING NUT LOCK BOLT
11	9104-4155	1	ADJUSTING NUT LOCK
12	9104-4156	4	DIFFERENTIAL CAP BOLT
13	9104-4157	4	LOCATING PIN
14	9104-4158	1	SHIM KIT
15	9104-4159	1	SHIM KIT
16	9104-4161	1	BEARING ASSY
17	9104-4449	1	DIFFERENTIAL & BEVEL GEAR SET
18	9104-4163	1	BEARING ASSY
19	9104-4164	1	ADJUSTING SHIM KIT

AXLE SHAFT and PLANETARY WHEEL END

Starting Serial No. 8344001L
thru Serial No. 8744114G
Excluding Serial No. 8744079G
Revised 7-1-99

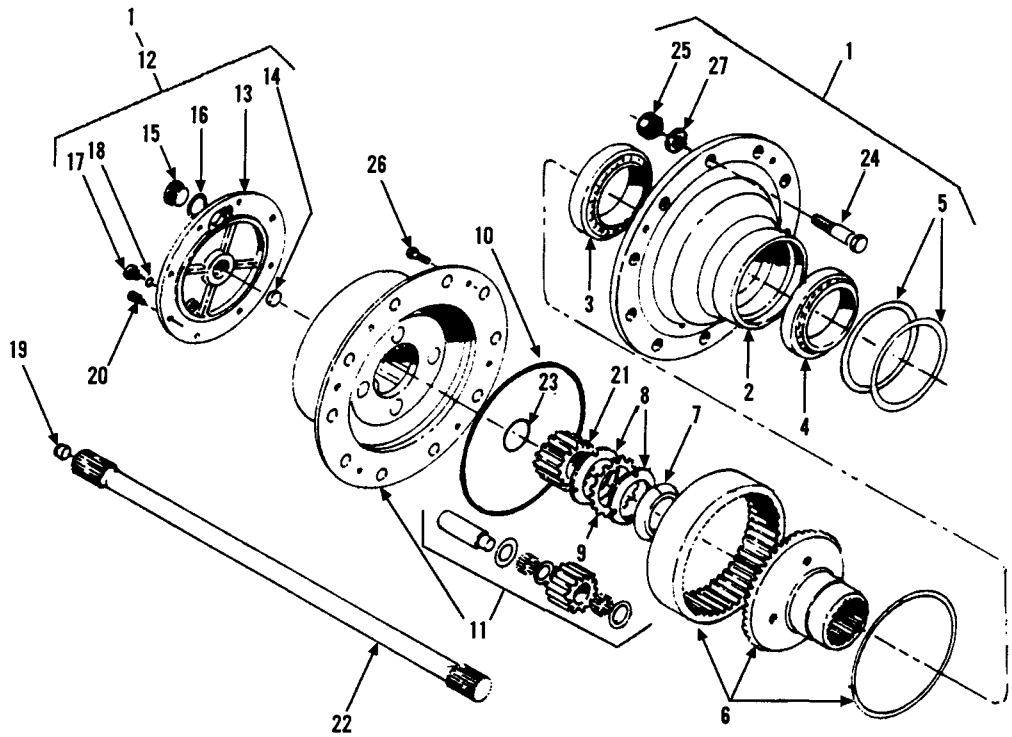

Item	Part No.	Qty.	Description Of Part
1	9020-7940	-	PLANETARY WHEEL END ASSY
2	9020-7941	1	HUB
3	9020-1833	1	BEARING
4	9020-1834	1	BEARING
5	9020-1805	2	OIL SEAL (134.5 X 155.6 X 9.52)
6	9020-1836	1	RING GEAR and CARRIER ASSY
7	9020-1837	1	CONE
8	9020-1838	2	NUT
9	9020-1839	1	LOCKWASHER
10	9020-1840	1	SEAL (257 X 263)
11	9020-7942	1	PLANETARY CARRIER ASSY
12	9020-1842	1	COVER ASSY (includes items 13 thru 18)
13	9040-1254	1	COVER
14	9040-1255	1	THRUST BUTTON
15	9040-1256	1	PLUG
16	9040-1257	1	GASKET
17	9040-1258	1	PLUG
18	9040-1259	1	GASKET
19	9020-3891	1	SHIM KIT
20	9020-3845	8	BOLT H8 X 1.25 1R25
21	9020-1846	1	SUN GEAR
22	9020-7943	1	AXLE SHAFT
23	9020-1848	2	SNAP RING
24	9020-7944	10	WHEL STUD
25	9020-1853	10	WHEEL NUT
26	9020-1849	3	BOLT (CHC F-90-M10 X 1.5 X 25)
27	9020-1854	10	WASHER

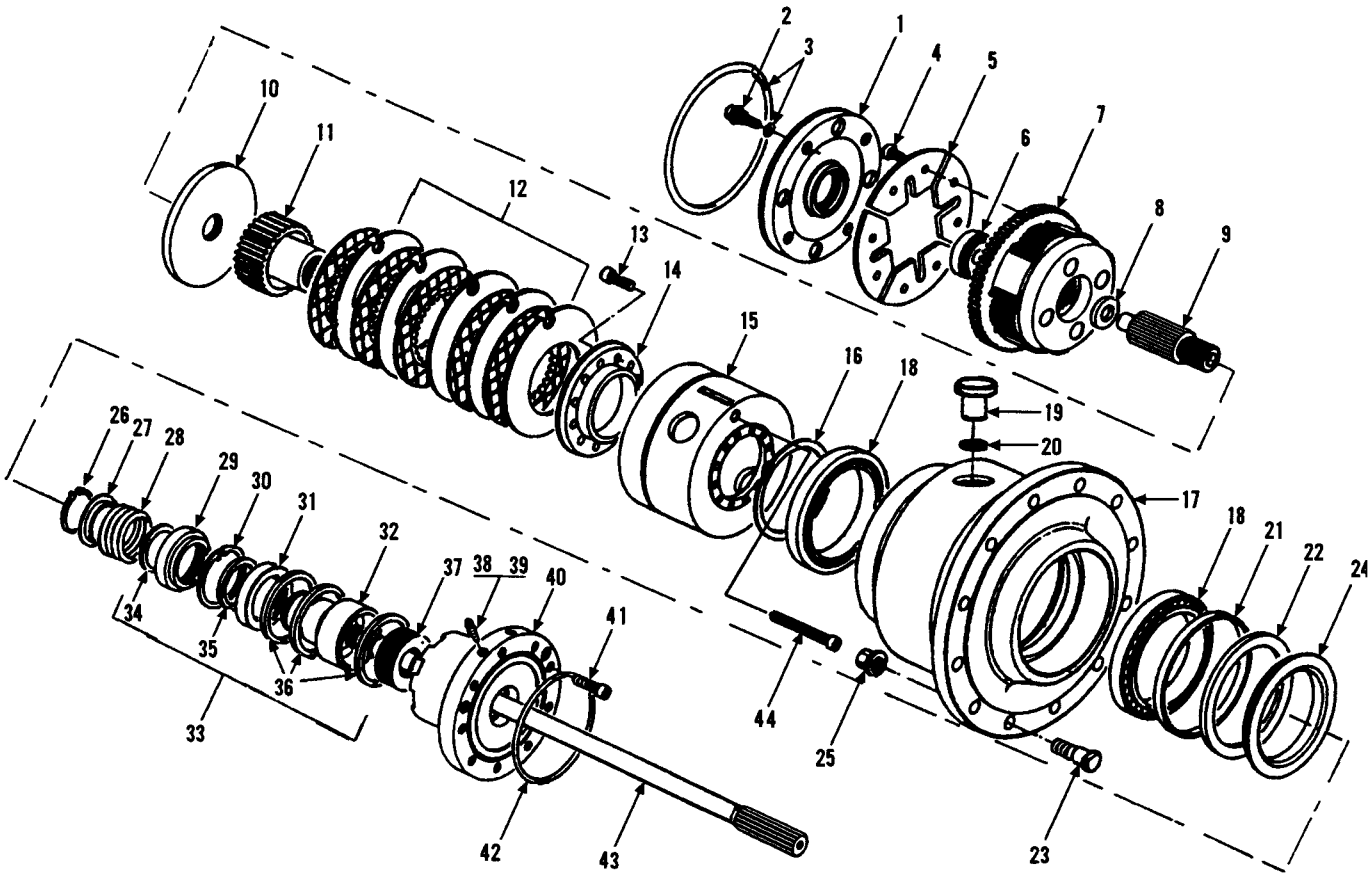

Item	Part No.	Qty.	Description Of Part
	9103-4309	1	BRAKE WHEEL ASSY (includes all items)
1	9104-4166	1	COVER ASSY (Includes items 2 thru 6)
2	9104-4167	4	HEX HD CAPSCREW
3	9104-4168	1	O-RING KIT
4	9104-4169	4	HEX HD CAPSCREW
5	9104-4170	4	SECTOR PLATE
6	9104-4171	1	BEARING ASSY
7	9104-4460	1	PLANETARY CARRIER ASSY
8	9104-4173	4	SPACER
9	9104-4174	1	MID-SHAFT
10	9104-4175	1	ROTATING BRAKE DISC STOP
11	9104-4176	1	DISC HUB
12	9104-4177	1	BRAKE DISC ASSY
13	9104-4178	10	SOCKET HEAD CAPSCREW
14	9104-4179	1	FIXED BRAKE DISC STOP
15	9104-4180	1	RING GEAR & CARRIER ASSY
16	9104-4181	1	ADJUSTING SHIM KIT
17	9104-4459	1	WHEEL HUB ASSY (includes items 18 thru 23)
18	9104-4183	2	BEARING ASSY
19	9104-4184	1	PLUG
20	9104-4185	1	SEALING WASHER
21	9104-4186	1	SPACER
22	9104-4187	1	HUB SEAL
23	9104-4189	12	WHEEL STUD
24	9104-4458	1	SEAL RACE
25	9104-3146	12	SWIVEL NUT

Item	Part No.	Qty.	Description Of Part
26	9104-4191	1	SNAP RING
27	9104-4192	1	THRUST WASHER
28	9104-4193	1	SPARING
29	9104-4194	1	SERVICE BRAKE PISTON
30	9104-4195	1	SNAP RING
31	9104-4196	1	PARK BRAKE SEAL RING
32	9104-4197	1	PARK BRAKE PISTON
33	9104-4335	1	SEALING KIT (includes items 34, 35, & 36)
34		1	OIL SEAL
35		1	OIL SEAL
36		3	OIL SEAL
37	9104-4453	1	SPRING WASHER KIT
38	9104-4200	2	BLEEDER SCREW
39	9104-4298	2	BLEEDER SCREW CAP
40	9104-4201	1	SPINDLE ASSY
41	9104-4461	9	SOCKET HD CAPSCREW
42	9104-4203	1	O-RING
43	9104-4204	1	AXLE SHAFT
44	9103-4397	1	PIN (holds brake diacs in place)
			NOTE: QUANTITIES SHOWN ARE FOR ONE BRAKE WHEEL END ASSEMBLY ONLY.
			NOTE: ONLY ITEMS WITH PART NUMBERS ARE AVAILABLE FOR SERVICE.

** Revised drawing to match parts list.*

DRIVE TRAIN
(9104-4165) Front Axle Shaft & Planetary Wheel End

Starting Serial No. 8744115G
Also Machine S/N 8744079G
Original Issue 4-87
Revised 5-15-00

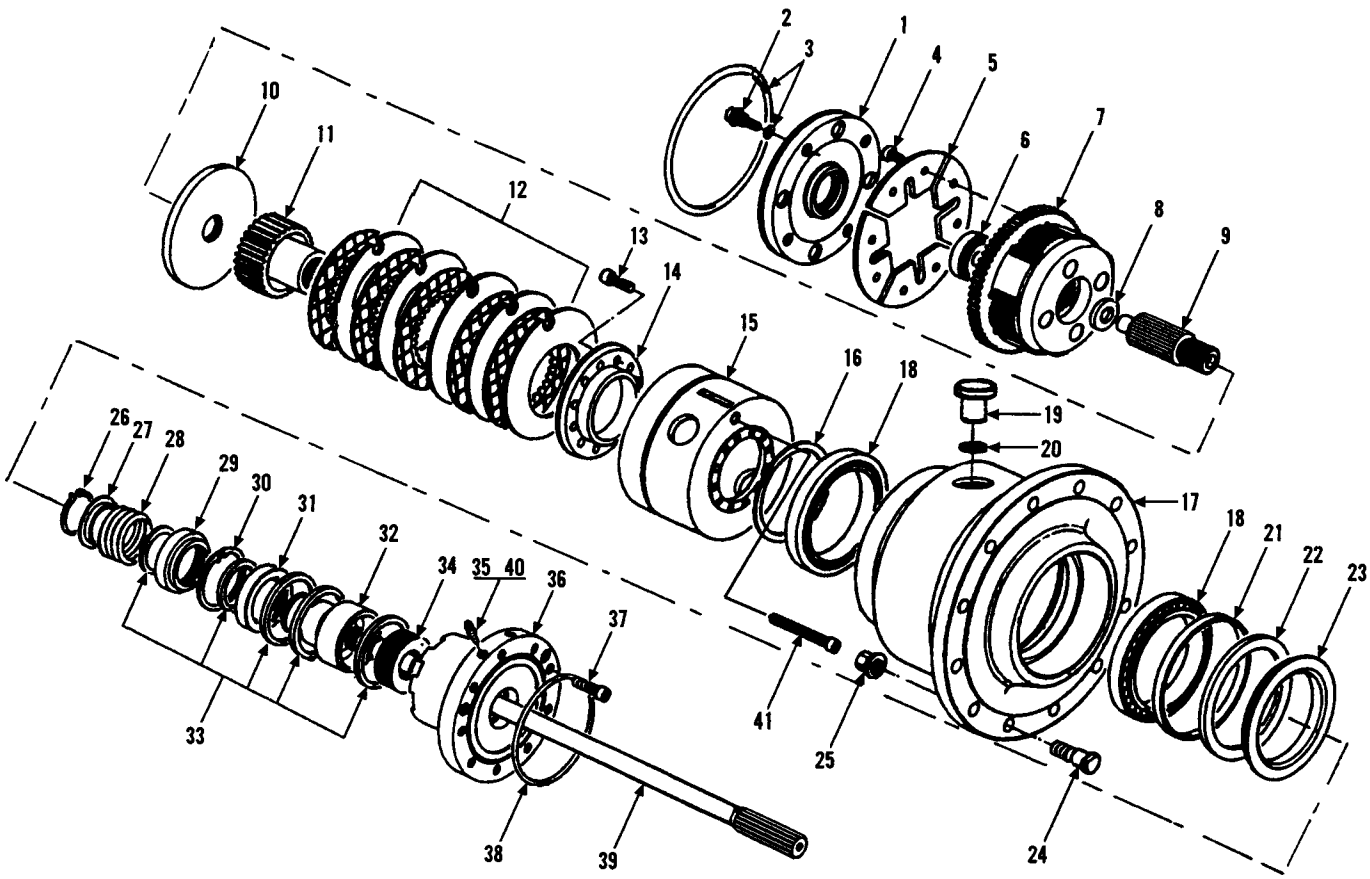

Item	Part No.	Qty.	Description Of Part
	9104-4165	1	BRAKE WHEEL END ASSY (includes all items)
1	9104-4166	1	COVER ASSY (includes items 2 thru 6)
2	9104-4167	4	HEX HD CAPSCREW
3	9104-4168	1	O-RING KIT
4	9104-4169	4	HEX HD CAPSCREW
5	9104-4170	4	SECTOR PLATE
6	9104-4171	1	BEARING ASSY
7	9104-4460	1	PLANETARY CARRIER ASSY
8	9104-4173	4	SPACER
9	9104-4174	1	MID-SHAFT
10	9104-4175	1	ROTATING BRAKE DISC STOP
11	9104-4176	1	DISC HUB
12	9104-4177	1	BRAKE DISC ASSY
13	9104-4178	10	SOCKET HEAD CAPSCREW
14	9104-4179	1	FIXED BRAKE DISC STOP
15	9104-4180	1	RING GEAR & CARRIER ASSY
16	9104-4181	1	ADJUSTING SHIM KIT
17	9104-4182	1	WHEEL HUB ASSY (includes items 18 thru 22)
18	9104-4183	2	BEARING ASSY
19	9104-4184	1	PLUG
20	9104-4185	1	SEALING WASHER

Item	Part No.	Qty.	Description Of Part
21	9104-4186	1	SPACER
22	9104-4187	1	HUB SEAL
*23	9104-4188	1	HUB SEAL RUNNER
24	9104-4189	10	WHEEL STUD
25	9104-3146	10	SWIVEL NUT
26	9104-4191	1	SNAP RING
27	9104-4192	1	THRUST WASHER
28	9104-4193	1	SPRING
29	9104-4194	1	SERVICE BRAKE PISTON
30	9104-4195	1	SNAP RING
31	9104-4196	1	PARK BRAKE SEAL RING
32	9104-4197	1	PARK BRAKE PISTON
33	9104-4335	1	SEALING KIT
34	9104-4199	1	SPRING WASHER KIT
*35	9104-4200	2	BLEEDER SCREW
*36	9104-4201	1	SPINDLE ASSY
37	9104-4202	9	SOCKET HD CAPSCREW
38	9104-4203	1	O-RING
39	9104-4204	1	AXLE SHAFT
*40	9104-4298	2	BLEEDER SCREW CAP
41	9103-4397	1	PIN (holds brake discs in place)
			NOTE: QUANTITIES SHOWN ARE FOR ONE BRAKE WHEEL END ASSEMBLY ONLY.

** Revised items 23, 35, 36, & 40.*

NEW STYLE

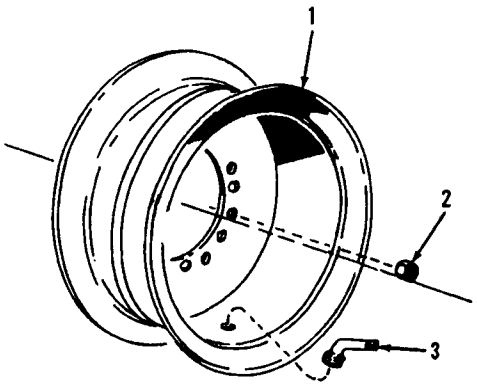

OLD STYLE

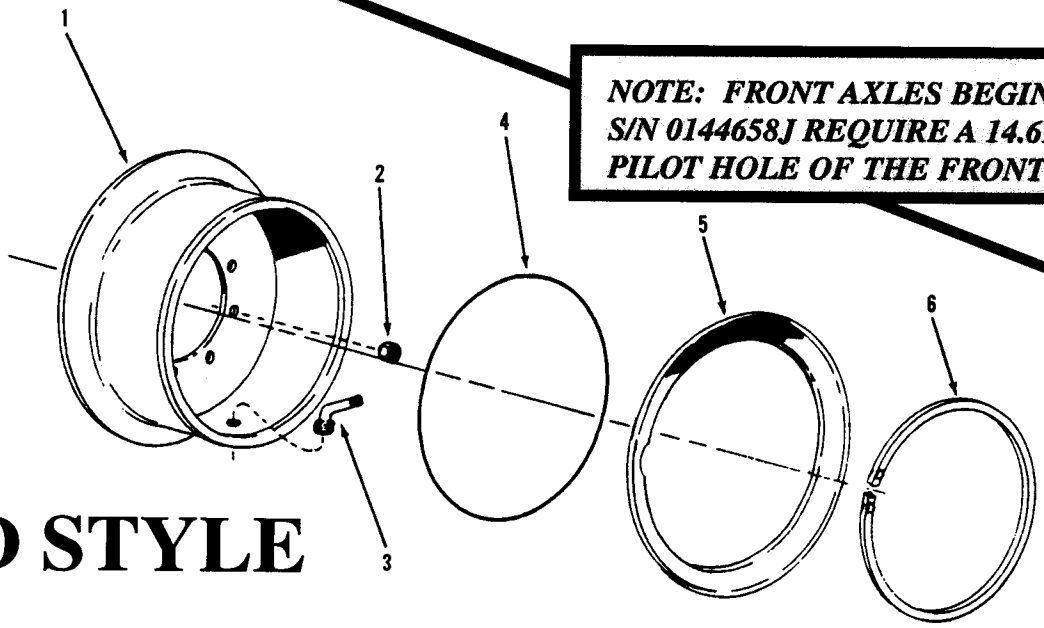

NOTE: FRONT AXLES BEGINNING WITH S/N 0144658J REQUIRE A 14.615" DIAMETER PILOT HOLE OF THE FRONT WHEEL ONLY.

FRONT-STANDARD

Item	Part No.	Qty.	Description Of Part
1	9104-3276	1	RIM, 8.00 TG X 24 ***** NOTE: (NO LONGER AVAILABLE REPLACED BY 9104-3430)***
1	9104-3430	1	RIM, 9.00 X 24 (New One Piece Style)
2	9104-3146	12	LUG NUT (lubricate and torque to 350-400 ft.lbs.)
3	9020-0339	1	VALVE (air/liquid) ***** NOTE: (USE WITH 9104-3276 ONLY)***
3	9108-3385	1	VALVE (air/liquid) (Use with 9103-3430)
4	9020-0561	1	O-RING
5	9020-0772	1	GUTTER RING
6	9020-1615	1	LOCK RING
7	9103-3104	1	TIRE, 13.00 X 24, 12 PLY (not illustrated)

REAR-STANDARD

Item	Part No.	Qty.	Description Of Part
1	9060-2638	1	RIM, 8.00 TG X 24 ***** NOTE: (NO LONGER AVAILABLE REPLACED BY 9103-3467)***
1	9103-3467	1	RIM, 9.00 X 24 (New One Piece Style)
2	9020-2141	10	LUG NUTS
3	9020-0339	1	VALVE (air/liquid) ***** NOTE: (USE WITH 9060-2638 ONLY)***
3	9108-3385	1	VALVE (air/liquid) (Use with 9103-3467)
4	9020-0561	1	O-RING
5	9020-0772	1	GUTTER RING
6	9020-1615	1	LOCK RING
7	9060-2040	1	TIRE, 13.00 X 24, 8 PLY (not illustrated)
	9103-3104	1	TIRE, 13.00 X 24, 12 PLY (not illustrated)

FRONT-FLOATATION

Item	Part No.	Qty.	Description Of Part
1	9104-3081	1	RIM, 14.00 X 25
2	9104-3146	10	LUG NUT (lubricate and torque to 350-400 ft. lbs.)
3	9020-1452	1	VALVE (air / liquid)
4	9020-1441	1	O-RING
5	9020-1762	1	GUTTER RING
6	9020-1766	1	LOCK RING
7	9020-1439	1	TIRE, 17.5 X 25,14 PLY (L-2 TRACTION REGULAR TREAD)

NOTE:
8000# UNITS
40 Gal. water & 200 Lbs. calcium
Inflate to 55 PSI

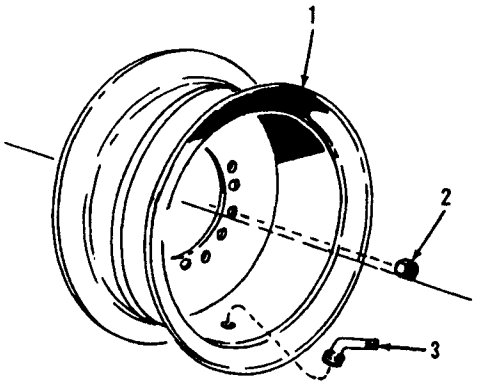

NEW STYLE

NOTE:
6000# UNITS
Inflate to 55 PSI

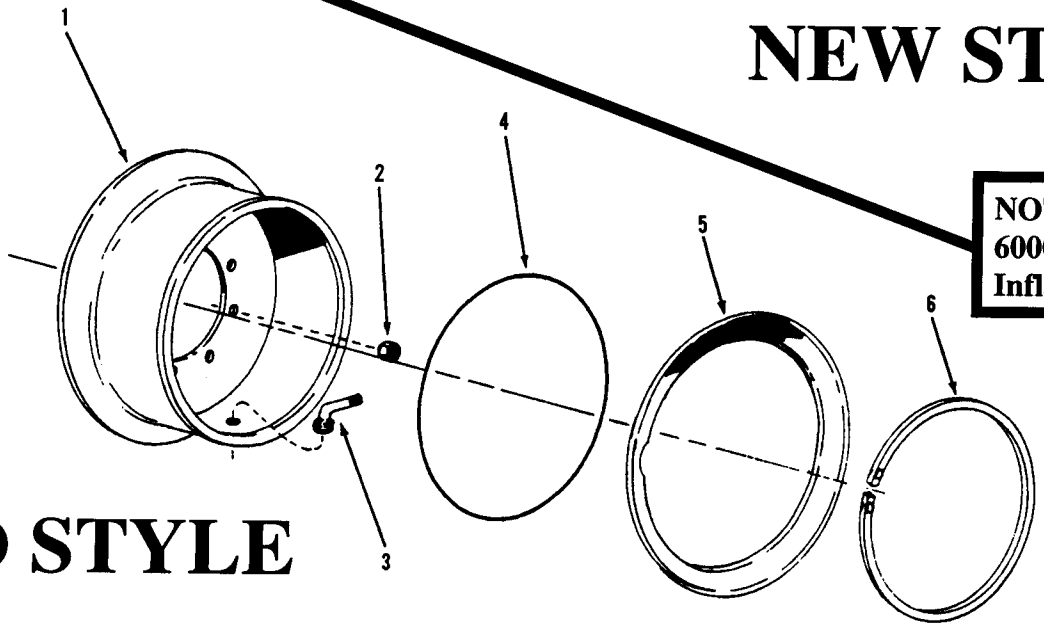

OLD STYLE

FRONT-STANDARD

Item	Part No.	Qty.	Description Of Part
1	9060-2780	1	RIM, 8.00 TG X 24 ***** NOTE: (NO LONGER AVAILABLE, REPLACED BY 9103-3468)***
* 1	9103-3468	1	RIM, 9.00 X 24 (New One Piece Style)
2	9020-1853	10	LUG NUT
3	9020-0339	1	VALVE (air/liquid) ***** NOTE: (USE WITH 9060-2780 ONLY)***
* 3	9108-3385	1	VALVE (air/liquid) (Use with 9103-3468)
4	9020-0561	1	O-RING
5	9020-0772	1	GUTTER RING
6	9020-1615	1	LOCK RING
7	9060-2040	1	TIRE, 13.00 X 24, 8 PLY (not illustrated)
	9103-3104	1	TIRE, 13.00 X 24,12 PLY (not illustrated)

REAR-STANDARD

Item	Part No.	Qty.	Description Of Part
1	9060-2638	1	RIM, 8.00 TG X 24 ***** NOTE: (NO LONGER AVAILABLE REPLACED BY 9103-3467)***
* 1	9103-3467	1	RIM, 9.00 X 24 (New One Piece Style)
2	9020-2141	10	LUG NUTS
3	9020-0339	1	VALVE (air/liquid) ***** NOTE: (USE WITH 9060-2638 ONLY)***
* 3	9108-3385	1	VALVE (air/liquid) (Use with 9103-3467)
4	9020-0561	1	O-RING
5	9020-0772	1	GUTTER RING
6	9020-1615	1	LOCK RING
7	9060-2040	1	TIRE, 13.00 X 24, 8 PLY (not illustrated)
	9103-3104	1	TIRE, 13.00 X 24, 12 PLY (not illustrated)

FRONT-FLOATATION

Item	Part No.	Qty.	Description Of Part
1	9060-2870	1	RIM, 12.00 X 25
2	9020-1853	10	LUG NUT
3	9020-7413	1	VALVE (air / liquid)
4	9020-7416	1	O-RING
5	9020-7415	1	GUTTER RING
6	9020-7414	1	LOCK RING
7	9020-7412	1	TIRE, 15.5 X 25,12 PLY (not illustrated)

** Changed the page number from 6-15 to 6-14.*

DRIVE TRAIN
Wheels & Tires
Starting Serial No. 8744115G
Thru Serial No. 0144657
Including Serial No. 8744079G
Original Issue 4-87
Revised 7-1-99

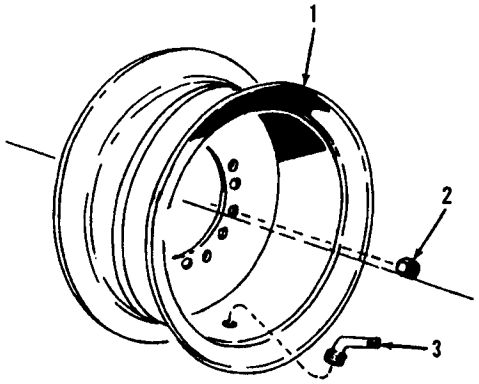

NEW STYLE

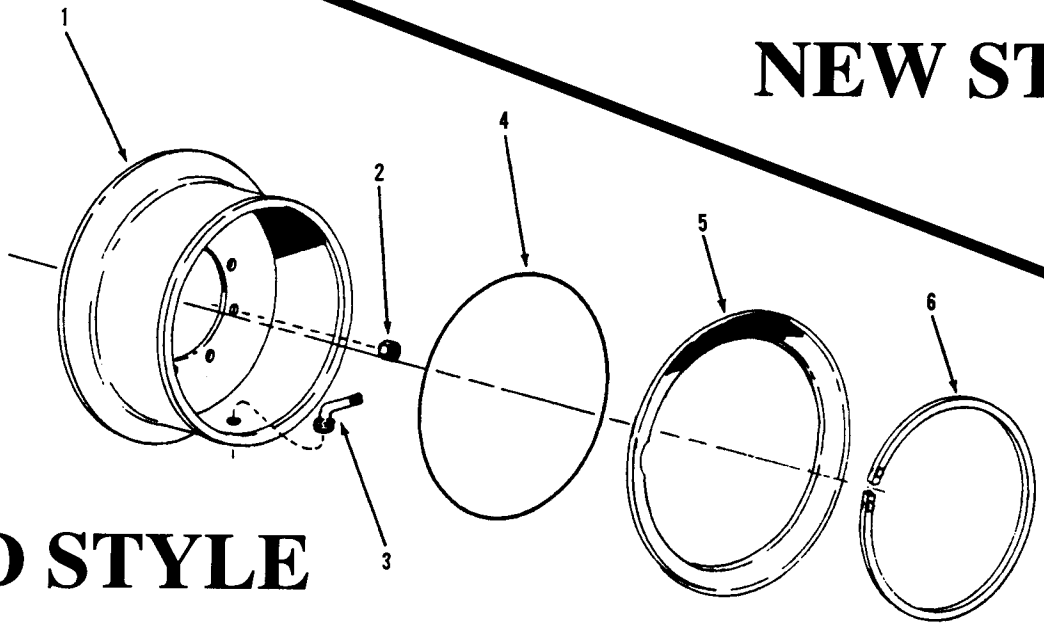

OLD STYLE

FRONT-STANDARD

Item	Part No.	Qty.	Description Of Part
1	9104-3080	1	RIM, 8.00 TG X 24 ***** NOTE: (NO LONGER AVAILABLE, REPLACED BY 9103-3469)***
* 1	9103-3469	1	RIM, 9.00 X 24 (New One Piece Style)
2	9104-3146	10	LUG NUT (lubricate & torque to 350-400 ft.lbs.)
3	9020-0339	1	VALVE (air/liquid) ***** NOTE: (USE WITH 9104-3080 ONLY)***
* 3	9108-3385	1	VALVE (air/liquid) (Use with 9103-3469)
4	9020-0561	1	O-RING
5	9020-0772	1	GUTTER RING
6	9020-1615	1	LOCK RING
7	9103-3104	1	TIRE, 13.00 X 24,12 PLY (not illustrated)

REAR-STANDARD

Item	Part No.	Qty.	Description Of Part
1	9060-2638	1	RIM, 8.00 TG X 24 ***** NOTE: (NO LONGER AVAILABLE REPLACED BY 9103-3467)***
* 1	9103-3467	1	RIM, 9.00 X 24 (New One Piece Style)
2	9020-2141	10	LUG NUTS
3	9020-0339	1	VALVE (air/liquid) ***** NOTE: (USE WITH 9060-2638 ONLY)***
* 3	9108-3385	1	VALVE (air/liquid) (Use with 9103-3467)
4	9020-0561	1	O-RING
5	9020-0772	1	GUTTER RING
6	9020-1615	1	LOCK RING
7	9060-2040	1	TIRE, 13.00 X 24, 8 PLY (not illustrated)
	9103-3104	1	TIRE, 13.00 X 24, 12 PLY (not illustrated)

FRONT-FLOATATION

Item	Part No.	Qty.	Description Of Part
1	9104-3081	1	RIM, 14.00 X 25
2	9104-3146	10	LUG NUT (lubricate & torque to 350-400 ft.lbs.)
3	9020-1452	1	VALVE (air / liquid)
4	9020-1441	1	O-RING
5	9020-1762	1	GUTTER RING
6	9020-1766	1	LOCK RING
7	9020-1439	1	TIRE, 17.5 X 25, 14 PLY (L-2 TRACTION REGULAR TREAD (not illustrated)

** Changed the page number from 6-15 to 6-14.*

PLANETARY HUB

Starting Serial No. 8344001L
Original Issue 4-87
Revised 5-31-05

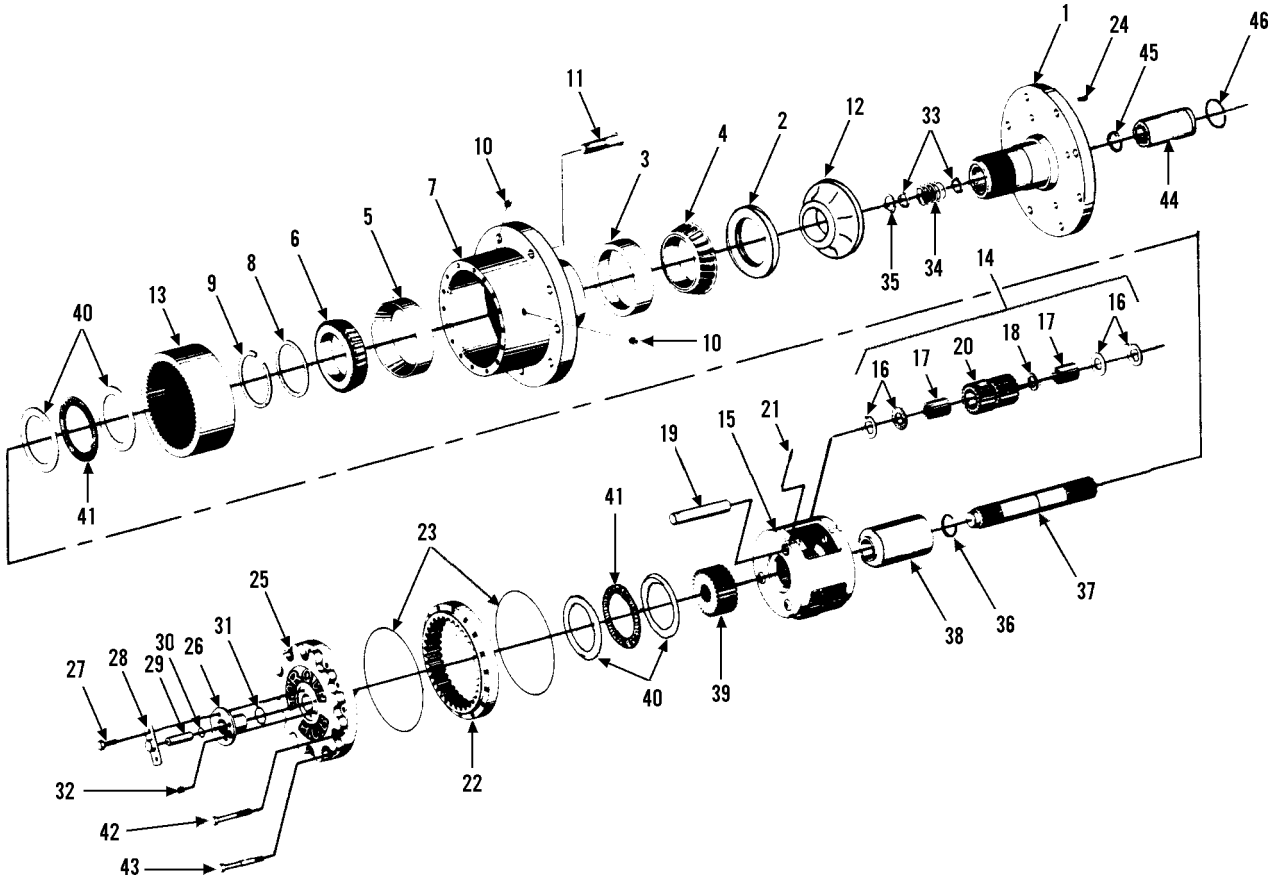

Item	Part No.	Qty.	Description Of Part
	9103-3095		PLANETARY HUB ASSY, (cast)
	9020-6746		PLANETARY HUB ASSY, (steel)
1	9020-8017	1	SPINDLE
2	7712-4002	1	SEAL
3	9020-2500	1	CUP BEARING
4	9020-2501	1	CONE BEARING
5	9020-2502	1	CUP BEARING
6	9020-2503	1	CONE BEARING
7	9020-2504	1	HUB, (steel)
	9103-4029	1	HUB, (cast)
8	9020-2505	1	SPACER
9	9020-2506	1	RETAINING RING
10	9020-2507	1	PIPE PLUG
11	9020-2508	10	WHEEL STUD, (for steel hub)
	9103-4028	10	WHEEL STUD, (for cast hub)
12	9020-6761	1	SEAL BOOT
13	9020-2509	1	INTERNAL GEAR
14	9020-8018	1	CARRIER ASSY, (includes items 15 thru 21)
15	9020-2511	1	CARRIER
16	9103-4026	6	TAB WASHER
	9103-4027	6	BRASS THRUST WASHER
17	9020-2513	84	NEEDLE BEARING
18	9103-4158	3	SPACER
19	9020-2515	3	PINION SHAFT
* 20	9103-4122	3	CLUSTER GEAR KIT, (includes items 16, 18 & 21)
21	9020-2517	3	ROLL PIN

Item	Part No.	Qty.	Description Of Part
22	9020-8020	1	RING GEAR
23	9020-2519	2	O-RING
24	8822-1119	2	SOCKET SET SCREW, (cup point), 3/8-16X3/8
25	9020-2521	1	COVER
26	9020-2522	1	COVERCAP
27	9020-2523	4	CAPSCREW
28	9020-2524	1	DISCONNECT CAP
29	9020-2525	1	DISCONNECT ROD
30	9020-2526	1	O-RING
31	9020-2527	1	O-RING
32	9020-2528	1	PIPE PLUG
33	9020-2531	2	WASHER
34	9020-2532	1	SPRING
35	9020-2533	1	RETAINING RING
36	9020-2534	1	RETAINING RING
37	9020-2536	1	INPUT SHAFT
38	9020-2537	1	THRUST SPACER
39	9020-8021	1	INPUT GEAR
40	9020-2542	4	THRUST WASHER
41	9020-2543	2	THRUST BEARING
42	9020-2544	8	CAPSCREW
43	9020-2545	4	SHOULDER BOLT
44	9020-2546	1	COUPLING
45	9020-2547	1	RETAINING RING
46	9020-2548	1	RETAINING RING

** Revised art and added inclusion note on item 20.*

TRANSMISSION - TILT, AUXILIARY and SWAY with MOUNTING PARTS

Starting Serial No. 8344001L
Revised 5-11-00

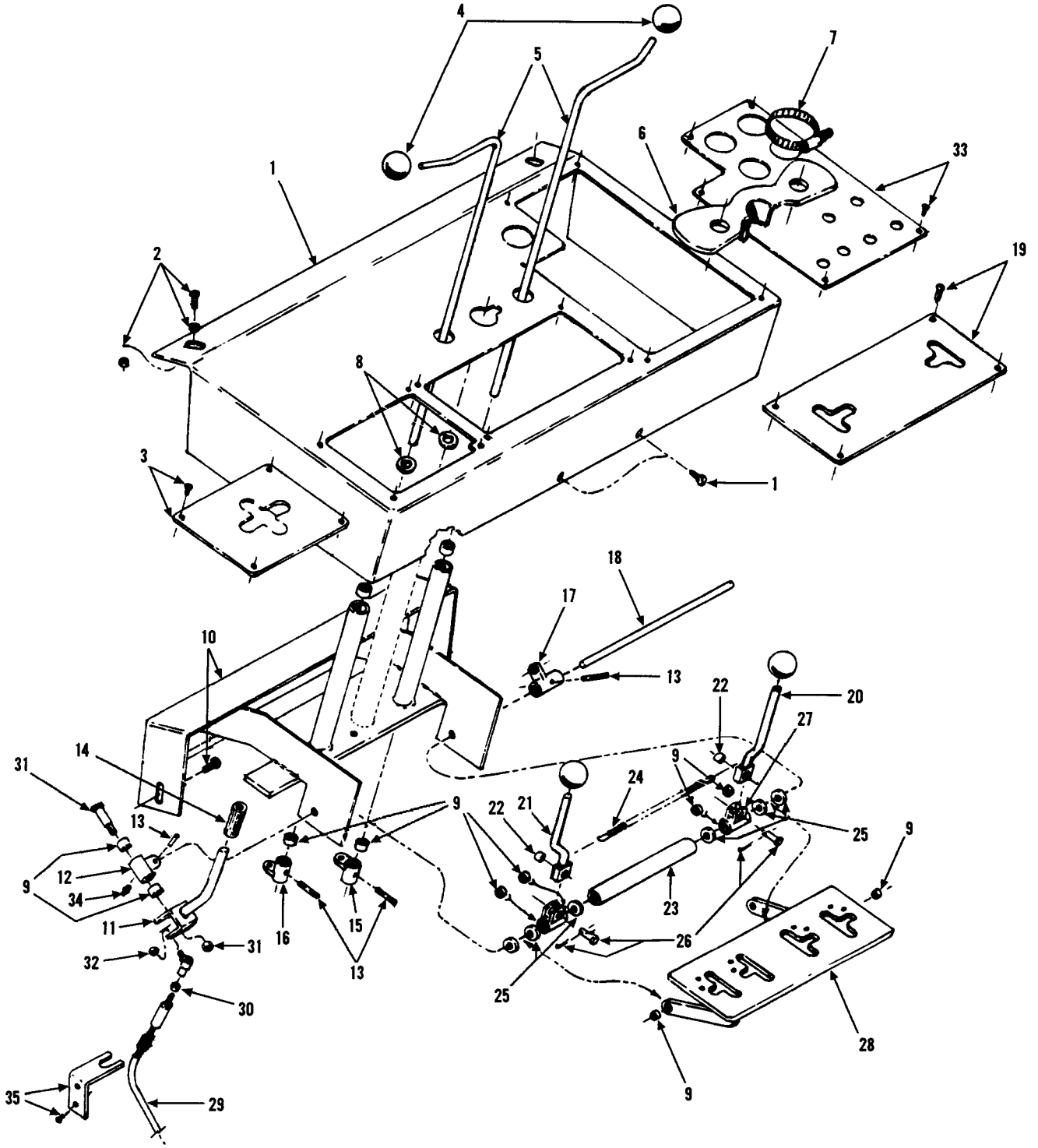

** Revised part number on item 21.*

TRANSMISSION - TILT, AUXILIARY and SWAY with MOUNTING PARTS

Starting Serial No. 8344001L
Revised 5-11-00

Item	Part No.	Qty.	Description Of Part
1	9060-2789	1	CONTROL AND INSTRUMENT PANEL
	9002-7319	2	SELF TAPPING SCREW
2	7714-3004	2	WHIZ LOCK SCREW
	7714-3006	2	WHIZ LOCK NUT
3	9020-7707	1	COVER PLATE
	8832-1015	4	SELF TAPPING SCREW, 6-32 X 1/2
4	9020-0299	4	KNOB
5	9020-5542	2	CONTROL ROD
6	9040-2903	1	CONTROL ROD BRACKET
7	9002-8695	1	CLAMP (bracket to steering column)
8	9002-7472	2	HARDENED WASHER 5/8
9	9020-0290	AR	NEEDLE BEARING
10	9080-1213	1	CONTROL BRACKET
	8820-1065	2	HEX HD CAPSCREW 1/2-13 X 1 GR5
11	9040-3406	1	CONTROL HANDLE
12	9020-6859	1	BELLCRANK
13	8863-1479	4	ROLL PIN
14	9020-0774	1	HANDLE GRIP
	9020-6005	1	WINCH BUTTON
15	9020-5973	1	BELLCRANK
16	9103-6042	1	BELLCRANK
17	9020-5541	1	BELLCRANK
18	9020-5571	1	BELLCRANK SHAFT
19	9020-6045	1	CONTROL PANEL
	8832-1015	4	SELF TAPPING SCREW 6-32 X 1/2
20	9020-6128	1	CONTROL ROD
*21	9020-5981	1	CONTROL ROD
22	9020-0688	2	CONTROL ROD BEARING
23	9020-6222	1	SPACER
24	9020-0559	1	SPRING
25	8856-1113	6	FLAT WASHER 5/8
26	9002-1557	2	CLEVIS PIN
	8863-1309	2	COTTER PIN 3/32 X 3/4
27	9020-5983	2	BELLCRANK
28	9040-2904	1	CONTROL PANEL
29	9020-6861	1	CABLE (tilt sway control)
30	9020-0406	1	BALL JOINT 3/8
	8850-1406	1	HEX JAM NUT 3/8-24
	8668-3117	1	BALL JOINT 5/16
	8850-1305	1	HEX NUT 5/16-24
	8855-1010	1	LOCKWASHER 5/16
31	9020-3502	1	SHOULDER BOLT
	8850-1008	1	HEX NUT 1/2-13
32	8850-1306	1	HEX NUT 3/8-24
33	9040-3178	1	INSTRUMENT PANEL PLATE WAUKESHA (used thru S/N 8444490)
	9103-1102	1	INSTRUMENT PANEL PLATE PERKINS (starting S/N 8444491)
	8832-1015	5	SELF TAPPING SCREW 6-32 X 1/2
34	8867-1008	1	LUBE FITTING STRAIGHT 1/4-28
35	9103-1013	1	CABLE BRACKET
	8826-1030	2	SOCKET BUTTON HD CAPSCREW 3/8-16 X 1 1/4
	8850-1006	2	HEX NUT 3/8-16

** Revised part number on item 21.*

BOOM TILT AND SWAY CONTROL

Starting Serial No. 8344001L
Revised 7-1-99

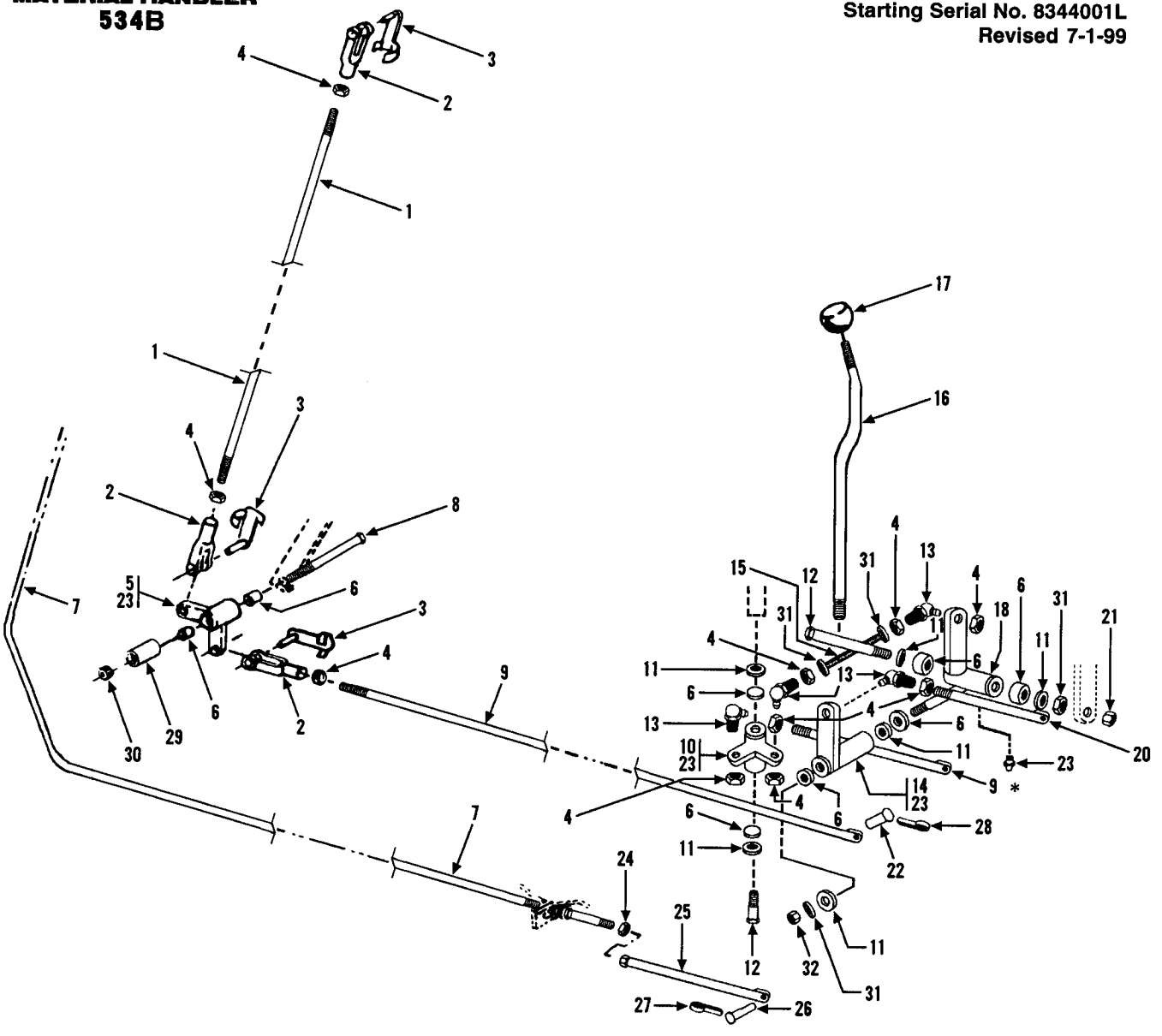

Item	Part No.	Qty.	Description Of Part
1	9020-2361	1	CONTROL LINKAGE ROD (tilt)
2	8882-1004	3	ADJUSTABLE YOKE END
3	9002-7987	3	SPRING CLEVIS
4	8850-1406	AR	HEX NUT, 3/8-24
5	9020-5533	1	BELLCRANK
6	9020-0290	8	NEEDLE SPRING
7	9020-6861	1	TILT, SWAY CONTROL CABLE
8	8820-1328	1	HEX HD CAPSCREW, 5/8-11X6-1/2, GR5
9	9104-6051	1	LINKAGE ROD
10	9020-5534	1	BELLCRANK
11	9002-8662	6	WAVE WASHER
12	9020-3502	2	SHOULDER BOLT
13	9020-0406	4	BALL JOINT
14	9020-5765	1	BELLCRANK
15	9040-0543	1	STUD
16	9020-5759	1	BOOM CONTROL HANDLE

Item	Part No.	Qty.	Description Of Part
17	9020-0638	1	KNOB
18	9020-5558	1	BELLCRANK
19	9106-6021	1	LINKAGE ROD
20	9106-6020	1	LINKAGE ROD
21	8850-1108	1	HEX JAM NUT, 1/2-13
22	9002-1552	4	CLEVIS PIN
23	8867-1008	4	LUBE FITTING, STRAIGHT, 1/4-28
24	8850-1305	1	HEX NUT, 5/16-24
25	9104-1236	1	CABLE END
26	9002-1552	1	CLEVIS PIN
27	8863-1302	1	COTTER PIN, 1-16X3/4
28	8863-1301	4	COTTER PIN, 1/16X1/2
29	9020-5580	1	SPACER (not require with auxiliary hydraulics option)
30	8850-1010	2	HEX NUT, 5/8-11
31	8856-1113	9	FLAT WASHER, #4
32	8850-1110	1	HEX JAM NUT, 5/8-11

** Changed the page number from 7-3 to 7-2*

ACCELERATOR LINKAGE

Starting Serial No. 8344001L
Thru Serial No. 8444490
Waukesha Engine Only
Revised 7-1-99

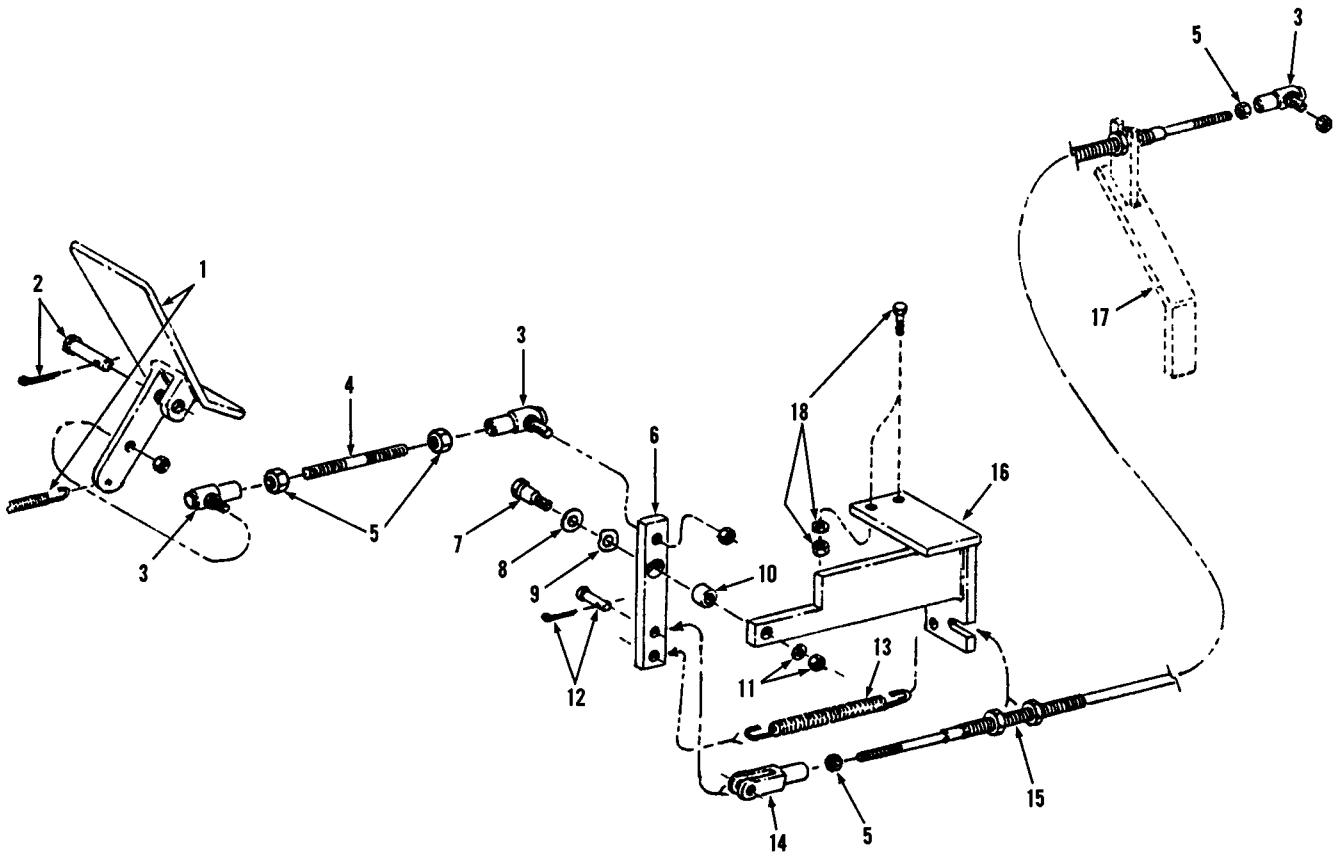

Item	Part No.	Qty.	Description Of Part
1	9020-0289	1	PEDAL, accelerator
	9020-0559	1	SPRING
2	9002-1584	1	PIN, clevis
	8863-1318	1	PIN, cotter
3	9002-7908	3	JOINT, ball
4	9020-7800	1	ROD, linkage
5	8850-1613	4	NUT, 10-32
6	9020-7803	1	BELLCRANK
7	9002-6492	1	BOLT, shoulder
8	8856-1108	1	WASHER
9	9002-8946	AR	WASHER, wave
10	9103-3037	1	BEARING

Item	Part No.	Qty.	Description Of Part
11	8850-1004	1	NUT
	8856-1111	1	WASHER
12	9002-7685	1	PIN and COTTER
13	9020-7801	1	SPRING
14	9002-8977	1	YOKE
15	9020-0795	1	CABLE, accelerator
16	9040-3424	1	BRACKET, accelerator cable
17	9020-5971	1	BRACKET, engine cable
18	8820-1020	2	BOLT, 5/16-18X1
	8856-1108	2	WASHER, 5/16"
	8850-1005	2	NUT, 5/16"-18

ACCELERATOR LINKAGE

Starting Serial No. 8444491
Perkins Engine Only
Original Issue 2-85
Revised 7-1-99

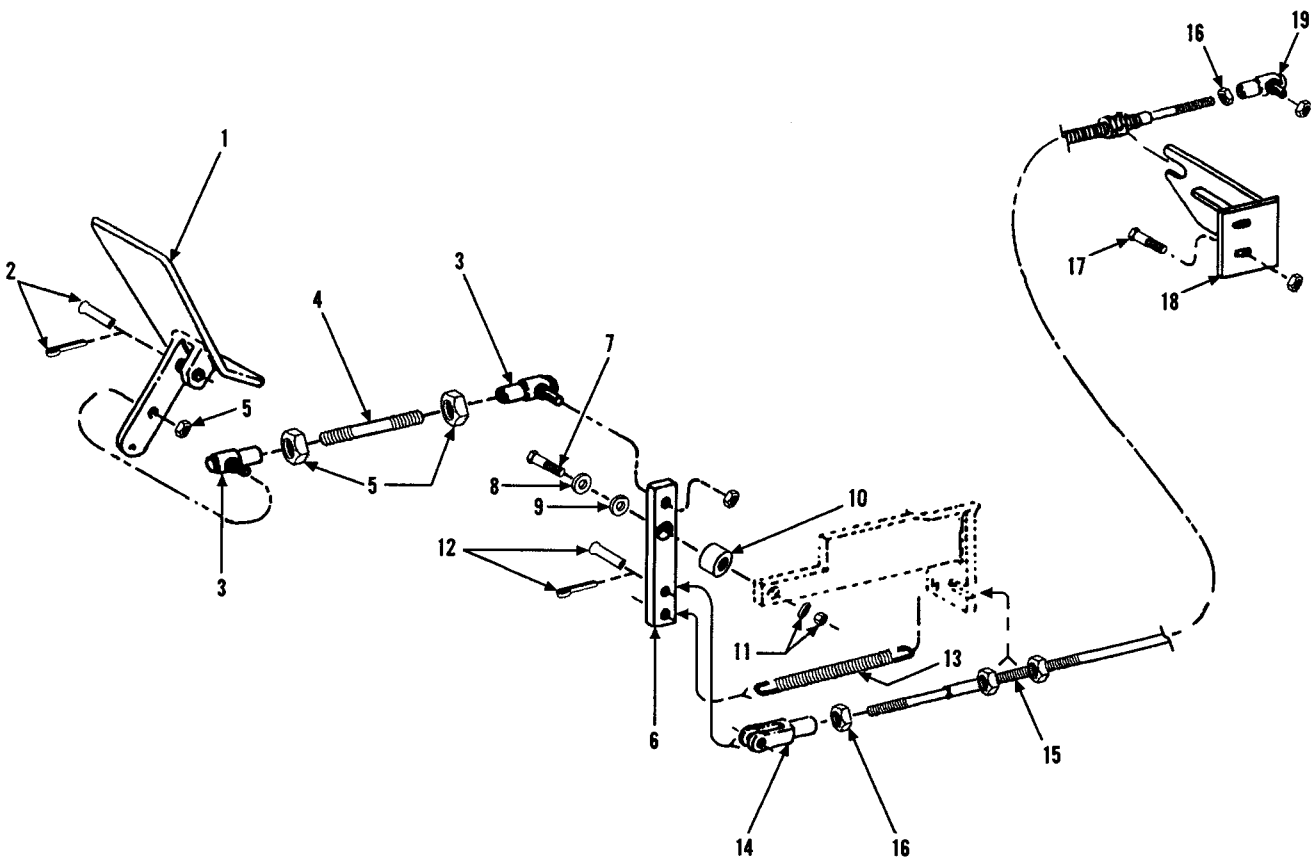

Item	Part No.	Qty.	Description Of Part
1	9103-6022	1	ACCELERATOR PEDAL
2	9002-1584	1	CLEVIS PIN
	8863-1318	1	COTTER PIN, 1/8X1
3	8668-3118	2	BALL JOINT
4	9103-1088	1	LINKAGE ROD
5	8850-1404	2	HEX JAM NUT, 1/4-28
6	9103-1087	1	BELLCRNK
7	8825-1018	1	SOCKET HD SHOULDER SCREW, 3/8X1/2 (5/16-18 thd)
8	8856-1109	1	FLAT WASHER, 3/8
9	9002-8946	AR	WAVE WASHER
10	9103-3281	1	BEARING

Item	Part No.	Qty.	Description Of Part
11	8850-1105	1	HEAVY HEX JAM NUT, 5/16-18
	8856-1111	1	FLAT WASHER, 1/2
12	9002-7685	1	PIN & COTTER
13	9020-7801	1	SPRING
14	9002-8977	1	YOKE
15	9020-0795	1	ACCELERATOR CABLE
16	8850-1613	2	HEX NUT, #10-32
17	8820-1021	2	HEX HD CAPSCREW, 5/16-18X1 1/4 GR5
	8852-1305	2	HEX LOCKNUT, 5/16-18
18	9103-6014	1	CABLE BRACKET
19	9002-7908	1	BALL JOINT

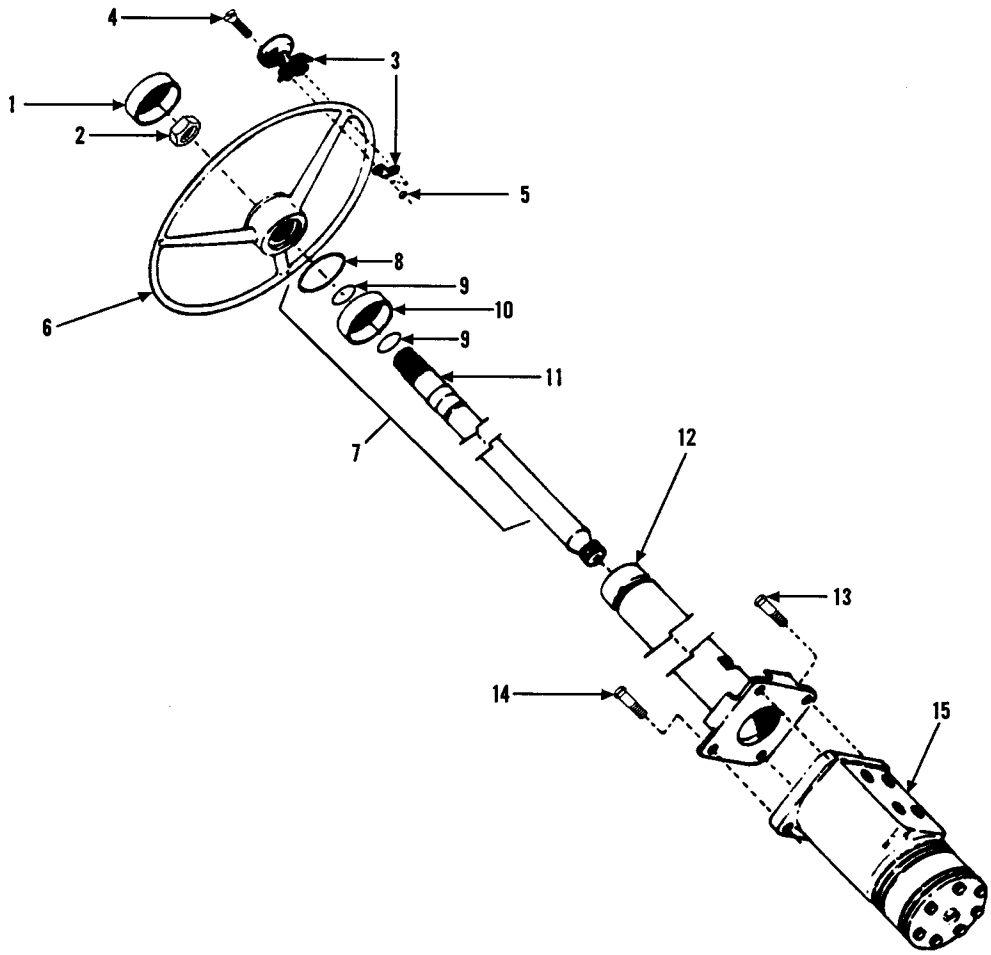

Item	Part No.	Qty.	Description Of Part
1	9060-0274	1	STEERING CAP
2	9020-0266	1	STEERING WHEEL NUT
3	9020-2230	1	SPINNER KNOB (includes items 4 & 5)
4	9002-0397	2	FLATHEAD SCREW, 1/4 NC X 1
5	8850-1004	2	HEX NUT, 1/4-20
6	9060-0273	1	STEERING WHEEL
7	9060-0267	1	STEERING COLUMN (includes items 8-12)
8	9020-1347	1	RETIANING RING
9	9020-1346	2	RETIANING RING
10	9020-1348	1	BEARING
11	9020-1349	1	SHAFT
12	9020-1350	1	TUBE AND FLANGE
13	8820-1037	2	HEX HD CAPSCREW, 3/8-16X1-1/2, GR5
14	8820-1033	1	HEX HD CAPSCREW, 3/8-16X3/4, GR5
15	9020-6762	1	ORBITROL
	9020-6567		ORBITROL SEAL KIT

BRAKE BOOSTER HYDRAULICS and BRAKE LINES

Starting Serial No. 8344001L
Thru Serial No. 8444490
Waukesha Engine Only
Revised 7-1-99

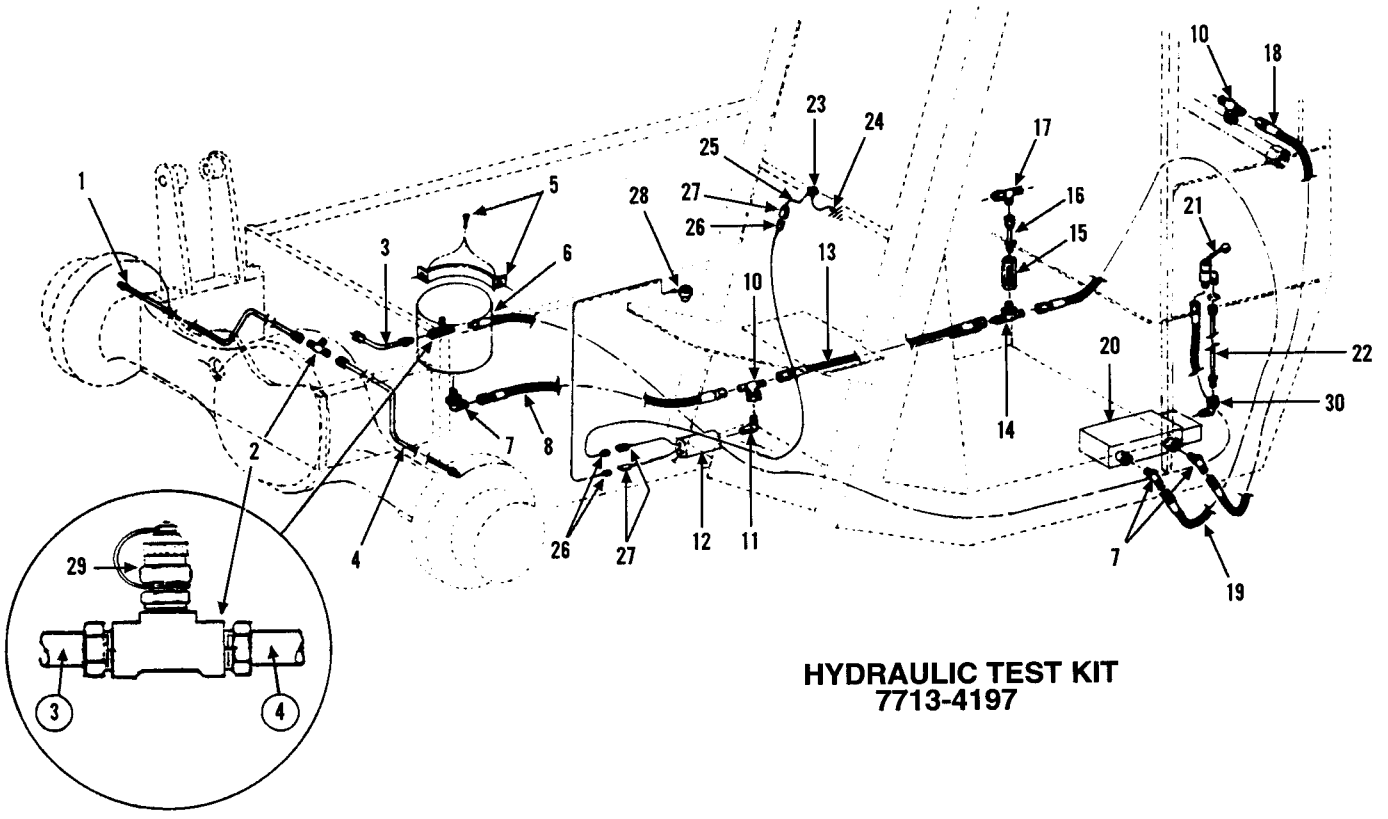

HYDRAULIC TEST KIT
7713-4197

Item	Part No.	Qty.	Description Of Part
1	9020-7851	1	TUBE ASSEMBLY
2	9020-0437	2	TEE
3	9020-7853	1	TUBE ASSEMBLY
4	9020-7852	1	TUBE ASSEMBLY
5	9020-7834	1	CLAMP
	8820-1031	2	HEX HD CAPSCREW, 3/8-16X1/2, GR5
6	9020-7816	1	ACCUMULATOR
7	8866-2065	3	ELBOW - 90 DEGREES (includes o-ring)
	8859-1205	3	O-RING
8	9020-7838	1	HIGH PRESSURE HOSE
9	9103-3245	1	HIGH PRESSURE HOSE
10	8866-2224	2	SWIVEL NUT BRANCH TEE, 3/8 TUBE
11	8874-3043	1	MALE ELBOW - 90 DEGREES 1/4X3/8 TUBE
12	9020-7823	1	BRAKE SWITCH
13	9020-7839	1	HIGH PRESSURE HOSE
14	8866-2153	1	BRANCH TEE (includes o-ring)
	8859-1205	1	O-RING
15	9020-2926	1	CHECK VALVE

Item	Part No.	Qty.	Description Of Part
16	9040-0527	1	ADAPTER
17	8866-2240	1	SWIVEL NUT RUN TEE, 1/2 TUBE
18	9020-7836	1	HYDRAULIC HOSE
19	9020-7837	1	HYDRAULIC HOSE
20	9103-3275	1	BRAKE BOOSTER (see page 8-6A)
	9020-7856	1	GASKET
21	9040-0835	1	MICO LOCK BRAKE CONTROL (includes decals)
22	9020-7854	1	TUBE ASSEMBLY
	9020-7855	1	PLUG
23	9020-0192	1	WARNING LIGHT
24	9020-0349	1	GROUND WIRE
25	9020-7857	1	WIRE
26	9002-8960	3	MALE CONNECTOR
27	9002-8959	3	FEMALE CONNECTOR
28	8903-1425	1	EYE CONNECTOR
29	9103-3033	1	MINI-CHECK
30	9002-7970	1	ELBOW-90 DEGREE (swivel)

BRAKE BOOSTER HYDRAULICS and BRAKE LINES

Starting Serial No. 83444491
Thru Serial No. 8744114G
Excluding Serial No. 8744079G
Perkins Engine Only
Original Issue 2-85
Revised 7-1-99

HYDRAULIC TEST KIT 7713-4197

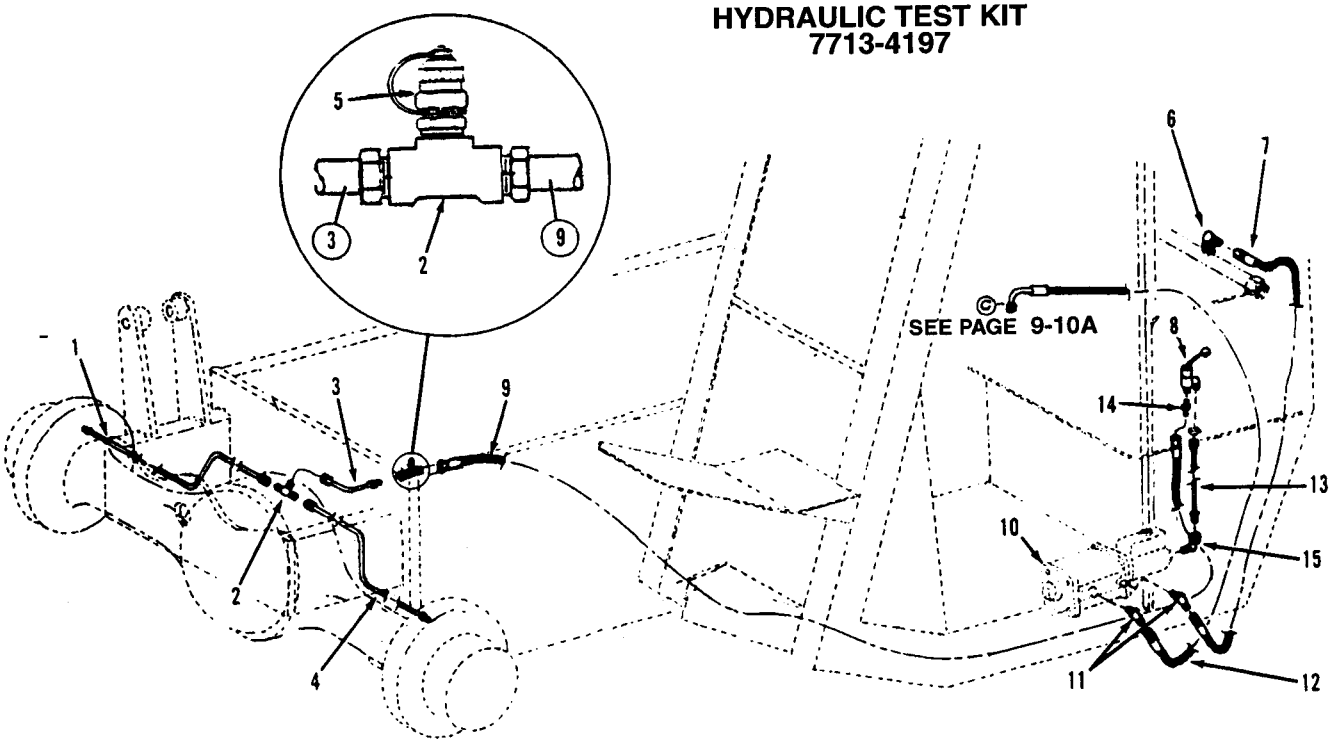

Item	Part No.	Qty.	Description Of Part
1	9020-7851	1	TUBE ASSY
2	9020-0437	2	TEE
3	9020-7853	1	TUBE ASSY
4	9020-7852	1	TUBE ASSY
5	9103-3033	1	MINI CHECK
6	8866-2105	1	ELBOW - 90 DEGREES (swivel nut)
7	9020-7836	1	HYDRAULIC HOSE
8	9040-0835	1	MICO LOCK BRAKE CONTROL (includes decals) (see page 8-9)
9	9103-3245	1	HIGH PRESSURE HOSE
10	9103-3275	1	BRAKE BOOSTER (see page 8-6A)
	9020-7856	2	GASKET
	9020-7855	2	PLUG
11	8866-2065	2	ELBOW - 90 DEGREES (includes o-ring)
	8859-1205	2	O-RING
12	8471-7604	1	HOSE ASSY
13	9020-7854	1	TUBE ASSY
14	9002-7769	1	STRAIGHT ADAPTER
15	9002-7970	1	ELBOW - 90 DEGREES (swivel)

HYDRAULICS & SERVICE BRAKE LINES

Starting Serial No. 8344115G
Also Machine S/N 8744079G
Original Issue 4-87
Revised 7-1-99

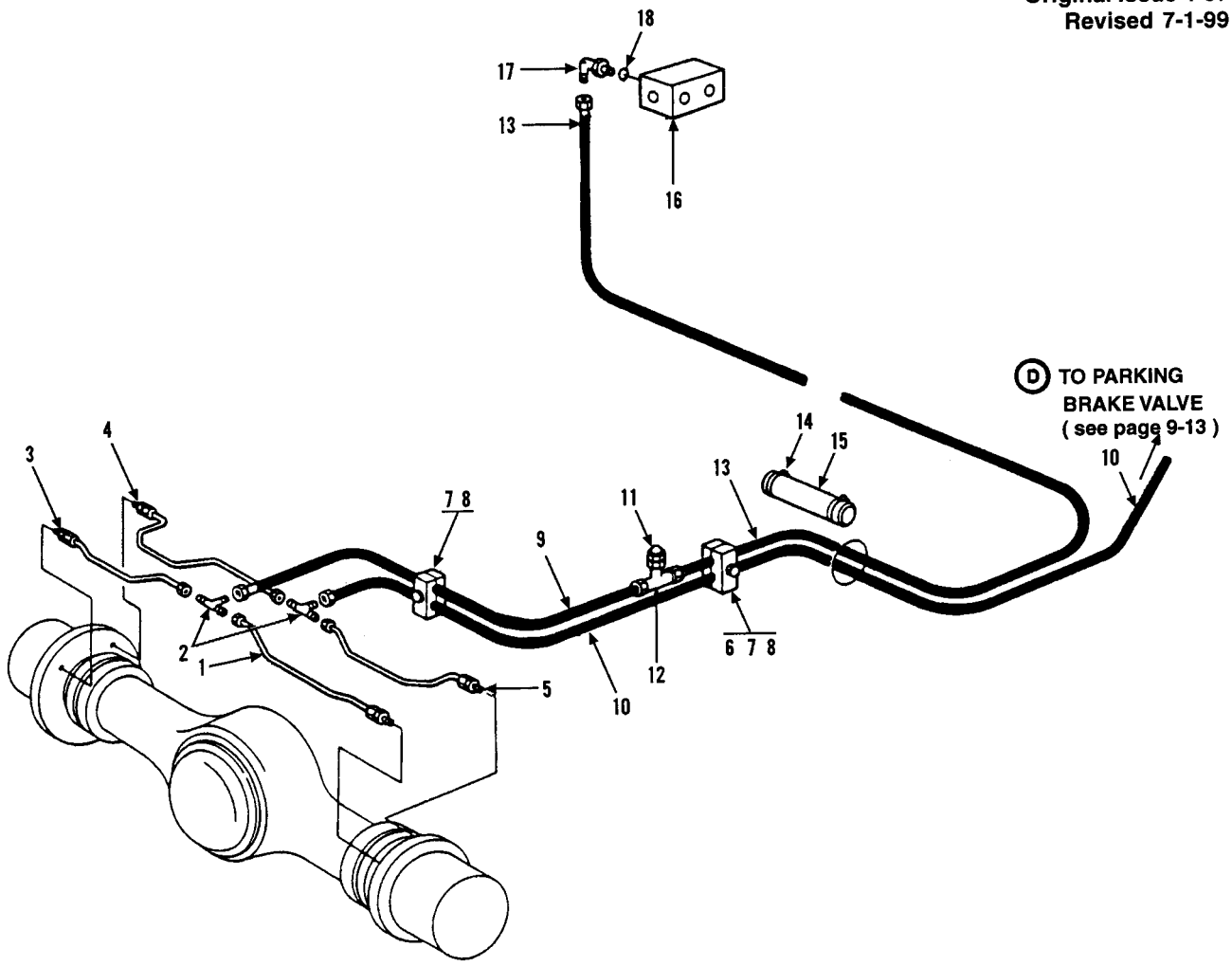

Item	Part No.	Qty.	Description Of Part
1	9104-3188	1	TUBE ASSY
2	8866-1305	2	UNION TEE, 3/8 TUBE
3	9104-3072	1	TUBE ASSY
4	9104-3189	1	TUBE ASSY
5	9104-3190	1	TUBE ASSY
6	7713-3177	2	HEX HD CAPSCREW
7	7713-3140	2	COVER PLATE
8	7713-3139	2	CLAMP SET
9	8471-7524	1	HOSE ASSY
10	8471-7522	1	HOSE ASSY
11	9103-3032	1	MINI-CHECK COUPLING
12	9104-3091	1	FEMALE BRACH TEE
13	8471-7523	1	HOSE ASSY
14	9002-7178	6	NYLON HOSE TIE
15	9104-1258	3	SLOTTED HOSE
16	9103-3307	REF	BRAKE VALVE ASSY (see page 10-21 for details)
17	8866-2064	1	ELBOW, 90 DEGREES (includes item 18)
18	8859-1204	1	O-RING

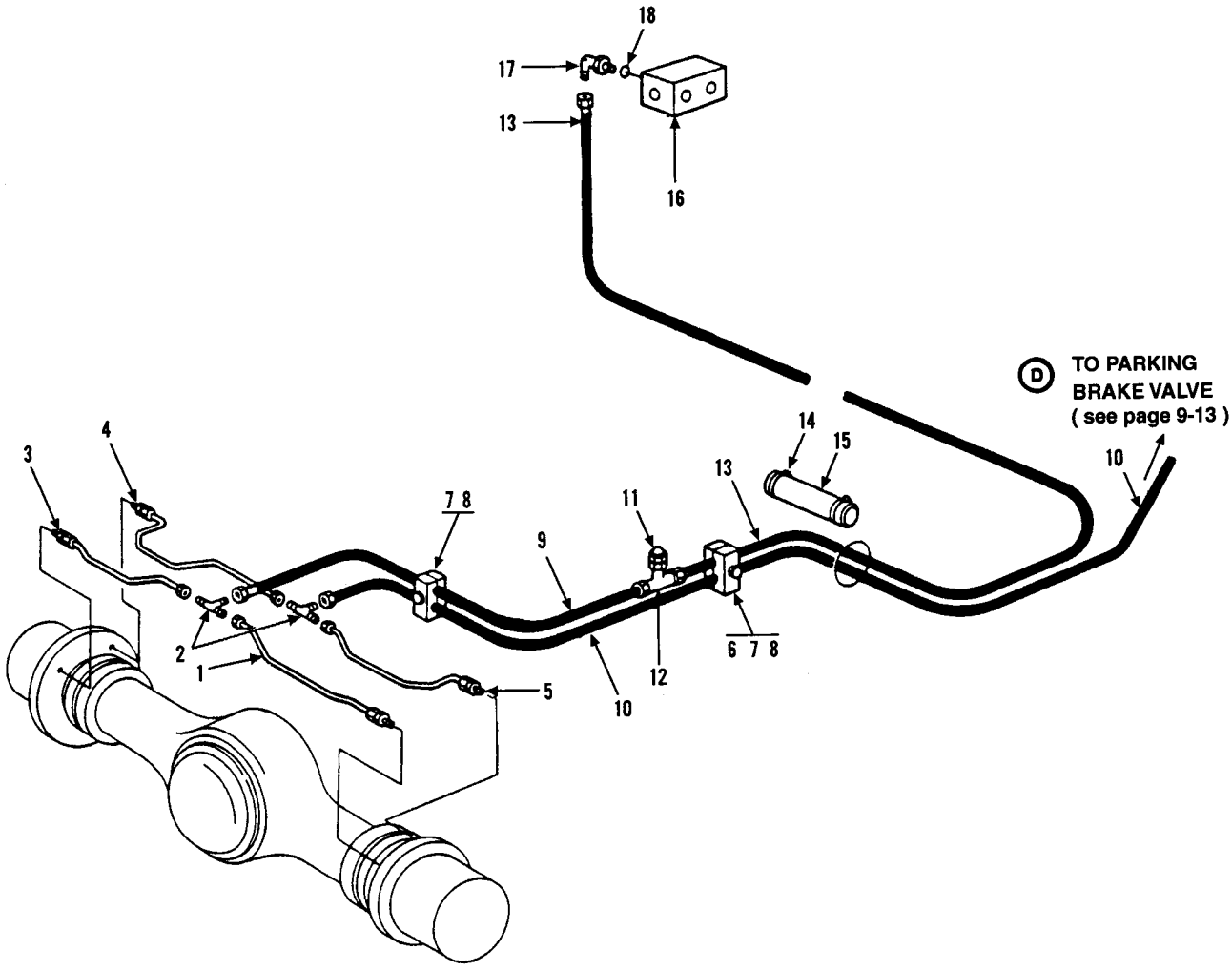

Item	Part No.	Qty.	Description Of Part
1	9104-3188	1	TUBE ASSY
2	8866-1305	2	UNION TEE, 3/8 TUBE
3	9104-3072	1	TUBE ASSY
4	9104-3189	1	TUBE ASSY
5	9104-3190	1	TUBE ASSY
6	7713-3177	2	HEX HD CAPSCREW
7	7713-3140	2	COVER PLATE
8	7713-3139	2	CLAMP SET
9	8471-7524	1	HOSE ASSY
10	8471-7522	1	HOSE ASSY
11	9103-3032	1	MINI-CHECK COUPLING
12	9104-3091	1	FEMALE BRACH TEE
13	8471-7523	1	HOSE ASSY
14	9002-7178	6	NYLON HOSE TIE
15	9104-1258	3	SLOTTED HOSE
16	9103-3307	REF	BRAKE VALVE ASSY (see page 10-21 for details)
17	8866-2064	1	ELBOW, 90 DEGREES (includes item 18)
18	8859-1204	1	O-RING

BRAKE and INCHING LINKAGE

Starting Serial No. 8344001L
Thru Serial No. 8444490
Waukesha Engine Only
Revised 7-1-99

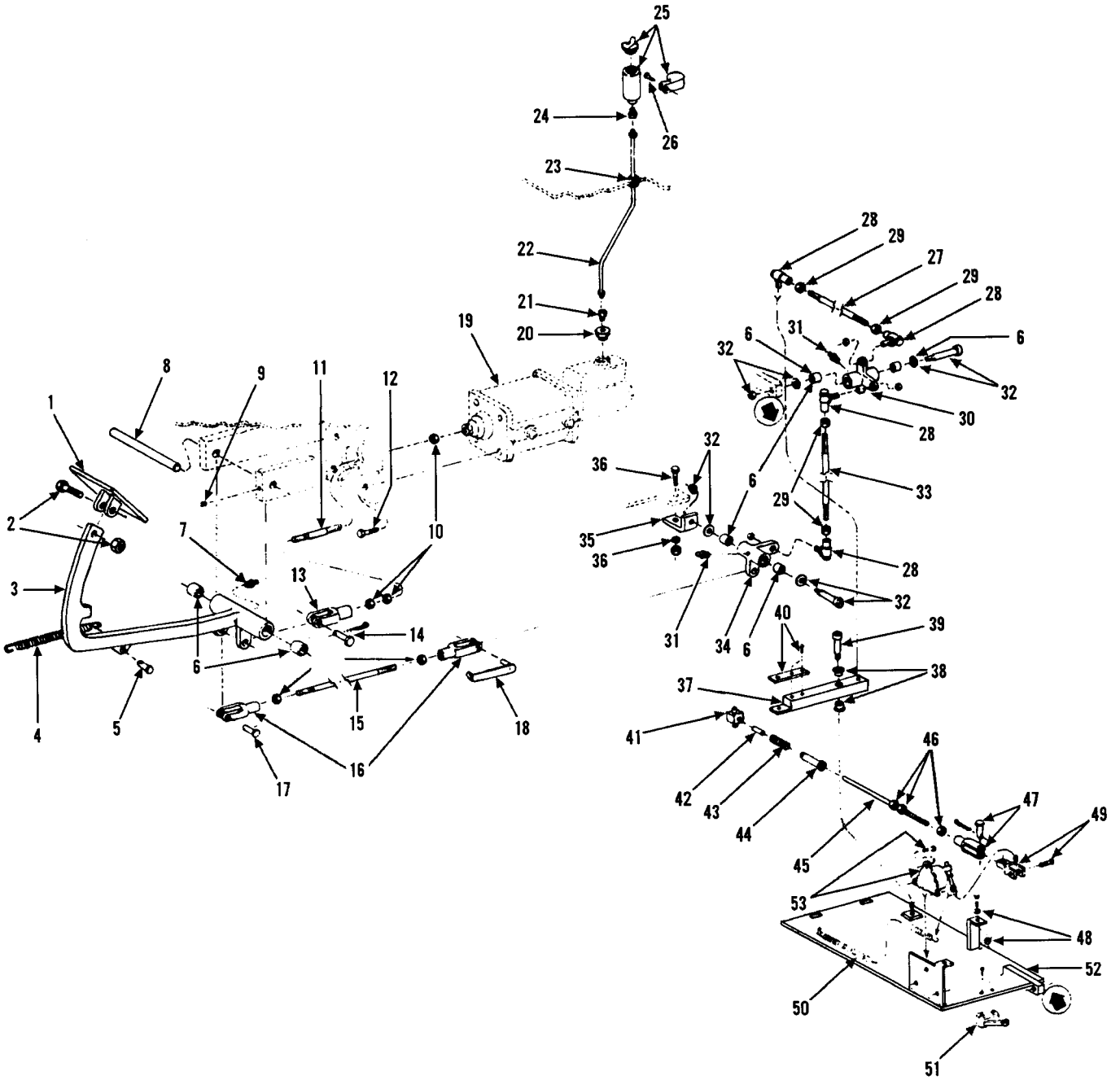

BRAKE and INCHING LINKAGE

Starting Serial No. 8344001L
Thru Serial No. 8444490
Waukesha Engine Only
Revised 7-1-99

Item	Part No.	Qty.	Description Of Part
1	9020-1463	1	BRAKE PEDAL
2	8820-1068	1	HEX HD CAPSCREW, 1/2-13X1-3/4 GR5
	8850-1008	1	
3	9040-3371	1	BRAKE LEVER
4	9020-0559	2	SPRING
5	9002-1553	1	CLEVIS PIN
6	9020-0290	6	BEARING
7	8867-1008	3	LUBE FITTING - STRAIGHT 1/4-28
8	9020-1562	1	PIN
9	8840-1001	2	SQ HD SET SCREW (cup point) 1/4-20X1/2
10	8850-1408	5	HEX JAM NUT, 1/2-20
11	9020-7835	1	SLIP ROD
12	8820-1066	4	HEX HD CAPSCREW, 1/2-13X1-1/4 GR5
13	9103-3237	1	SLIP YOKE
14	9002-1553	1	PIN
	8863-1318	1	COTTER PIN, 1/8X1
15	9020-7766	1	ROD
16	8882-1004	2	ADJUSTABLE YOKE END
17	9002-1558	1	CLEVIS PIN
18	9002-7987	1	SPRING CLEVIS
19	9103-3275	1	BRAKE BOOSTER (see page 8-6A)
20	9020-7887	1	CAP
21	9002-7769	1	FITTING
22	NSS	36"	NYLON TUBE LINE, 3/8"
23	9020-2303	1	GROMMET
24	9002-7769	1	FITTING
25	9020-7888	1	RESERVOIR FILL KIT
26	8820-1032	1	HEX HD CAPSCREW, 3/8-16X5/8 GR5
	8856-1109	1	FLAT WASHER, 3/8
27	9020-7768	1	ROD
28	9020-0406	4	BALL JOINT
29	8850-1406	6	HEX JAM NUT, 3/8-24
30	9020-7805	1	BELLCRANK
31	8867-1008	2	LUBE FITTING - STRAIGHT 1/4-28
32	9020-3502	2	SHOULDER BOLT
	8856-1113	4	FLAT WASHER, 5/8
	9002-8662	AR	WAVE WASHER
	8850-1108	2	HEX NUT, 1/2-13

Item	Part No.	Qty.	Description Of Part
33	9020-7767	1	ROD
34	9020-7833	1	BELLCRANK
35	9020-7769	1	BELLCRANK MOUNTING BRACKET
36	8820-1066	1	HEX HD CAPSCREW, 1/2-13X1-1/4 GR5
	8540-1340	1	WASHER, 1/2
	8850-1008	1	HEX NUT, 1/2-13
37	9040-3415	1	PIVOT ARM
38	9002-8971	2	BUSHING
39	9002-6511	1	SHOULDER BOLT
40	9020-7745	1	TOP PLATE
	8820-1005	2	HEX HD CAPSCREW, 1/4-20X1 GR5
41	9020-7742	1	SWIVEL
42	9103-3007	1	BUSHING
43	9020-8214	1	SPRING
44	9020-8213	1	SPRING GUIDE
45	9020-7743	1	SLIP ROD
46	8850-1304	3	HEX NUT, 1/4-28
47	9002-7684	1	CLEVIS AND PIN YOKE
48	8820-1005	4	HEX HD CAPSCREW, 1/4-20X1 GR5
	8856-1107	4	FLAT WASHER, 1/4
	8850-1004	4	HEX NUT, 1/4-20
49	9020-7750	1	LINK
	9002-8974	1	CLEVIS PIN
50	9020-7753	1	SPRING
51	9020-0616	1	MICRO SWITCH
	8830-4917	2	
	9002-8962	2	NUT
52	9060-2897	1	INCHING BASE PLATE
53	9020-7752	1	POTENTIOMETER (mounting inst. dwg. 9060-2899)
	9002-0494	3	BOLT
	9002-8976	3	WASHER
	9002-8975	3	NUT

9103-5070 Waukesha inching kit. Used to provide improved inching system for Waukesha powered machines.

9103-5111 Perkins inching kit. Used to provide updated inching system when changing from Waukesha to Perkins engine. Microswitch kit 9103-5110 must be used in conjunction with this kit.

BRAKE and INCHING LINKAGE

Starting Serial No. 8444491
Thru Serial No. 8744114G
Excluding Serial No. 8744079G
Perkins Engine Only
Original Isuue 2-85
Revised 6-8-06

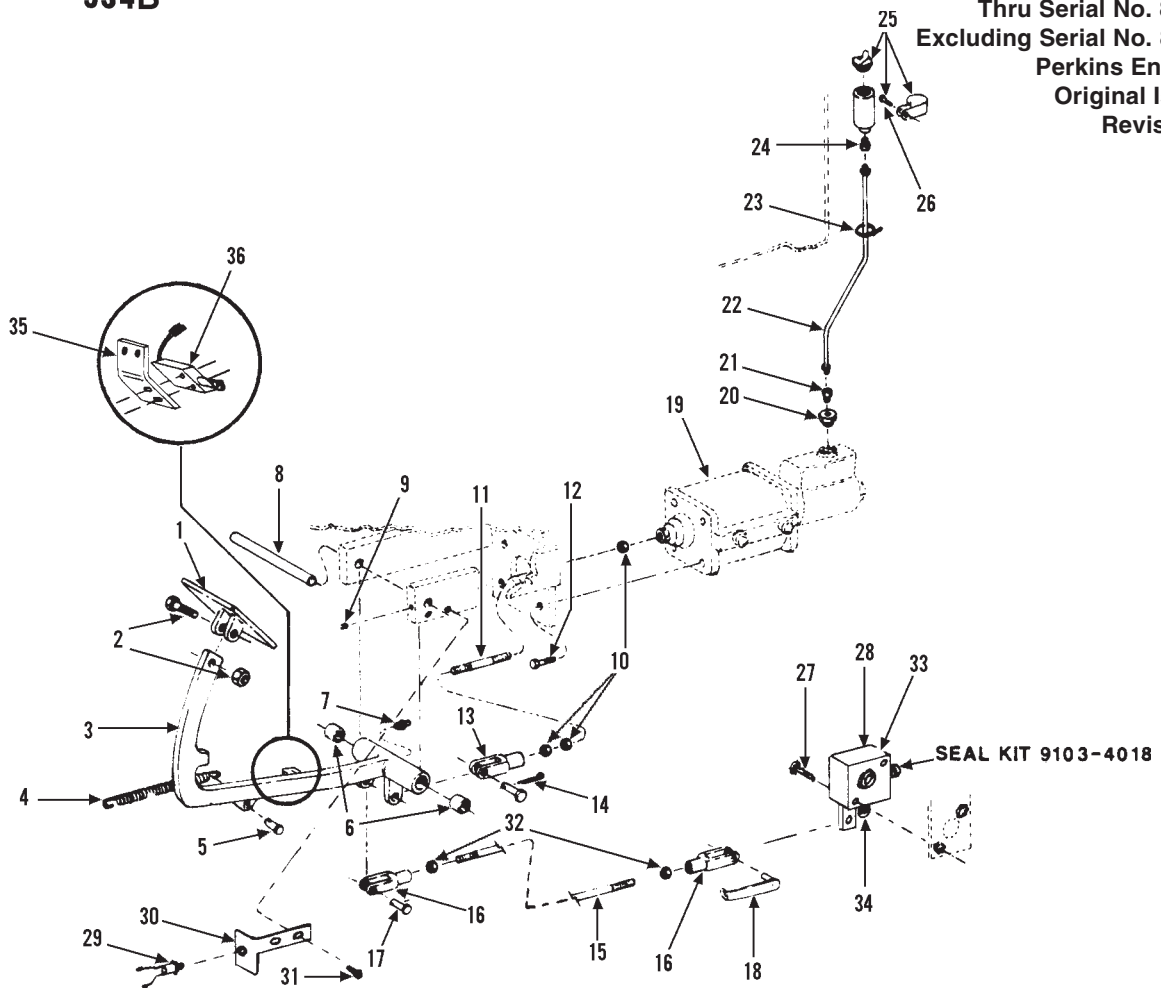

Item	Part No.	Qty.	Description Of Part
1	9020-1463	1	BRAKE PEDAL
2	8820-1068	1	HEX HD CAPSCREW, 1/2-13X1-3/4 GR5
	8850-1008	1	HEX NUT, 1/2-13
3	9040-3371	1	BRAKE LEVER
4	9020-0559	2	SPRING
5	9002-1553	1	CLEVIS PIN
6	9020-0290	6	BEARING
7	8867-1008	3	LUBE FITTING - STRAIGHT 1/4-28
8	9020-1562	1	PIN
9	8844-1001	2	SQUARE HD SET SCREW (cup point) 1/4-20x1/2
10	8850-1408	5	HEX JAM NUT, 1/2-20
11	9020-7835	1	SLIP ROD
12	8820-1066	4	HEX HD CAPSCREW,1/2-13X1-1/4 GR5
13	9103-3237	1	SLIP YOKE
14	9002-1553	1	PIN
	8863-1318	1	COTTER PIN, 1/8X1
15	9103-1085	1	ROD
16	8882-1004	2	ADJUSTABLE YOKE END
17	9002-1558	1	CLEVIS PIN
18	9002-7987	1	CLEVIS SPRING
19	9103-3275	1	BRAKE BOOSTER (see page 8-5A)
20	9020-7887	1	CAP
21	9002-7769	1	FITTING
22	NSS	36”	NYLON TUBE LINE, 3/8

Item	Part No.	Qty.	Description Of Part
23	9002-7187	1	TRAP
24	9002-7769	1	FITTING
25	9020-7888	1	RESERVOIR FILL KIT
26	8820-1032	1	HEX HD CAPSCREW, 3/8-16X5/8 GR5
	8856-1109	1	FLAT WASHER, 3/8
27	8820-1008	2	HEX HD CAPSCREW, 1/4-20X1-3/4 GR5
	8850-1004	2	HEX NUT, 1/4-20
28	9103-3096	1	INCHING VALVE
29	9103-3098	1	TRANS. DISCONNECT SWITCH (used on S/N 8444491 thru 8544670)
30	9103-1084	1	SWITCH BRACKET (used S/N 8444491 thru 8544670)
31	8820-1037	2	HEX HD CAPSCREW, 3/8-16X1-1/2 GR5
	8856-1004	2	FLAT WASHER,3/8
	8850-1006	2	HEX NUT, 3/8-16
32	8850-1406	2	HEX JAM NUT, 3/8-24
33	8319-3008	1	METRIC ELBOW
34	8319-3009	1	METRIC ADAPTER
35	9103-1232	1	SWITCH BRACKET (starting S/N 8544671)
*36	9103-3439	1	TRANS. DISCONNECT SWITCH (STARTING S/N 8544671)

** Revised part number on item 36.*

BRAKE PEDAL & INCHING LINKAGE

Starting Serial No. 8744115G
Also Machine S/N 8744079G
Original Isuue 4-87
Revised 6-8-06

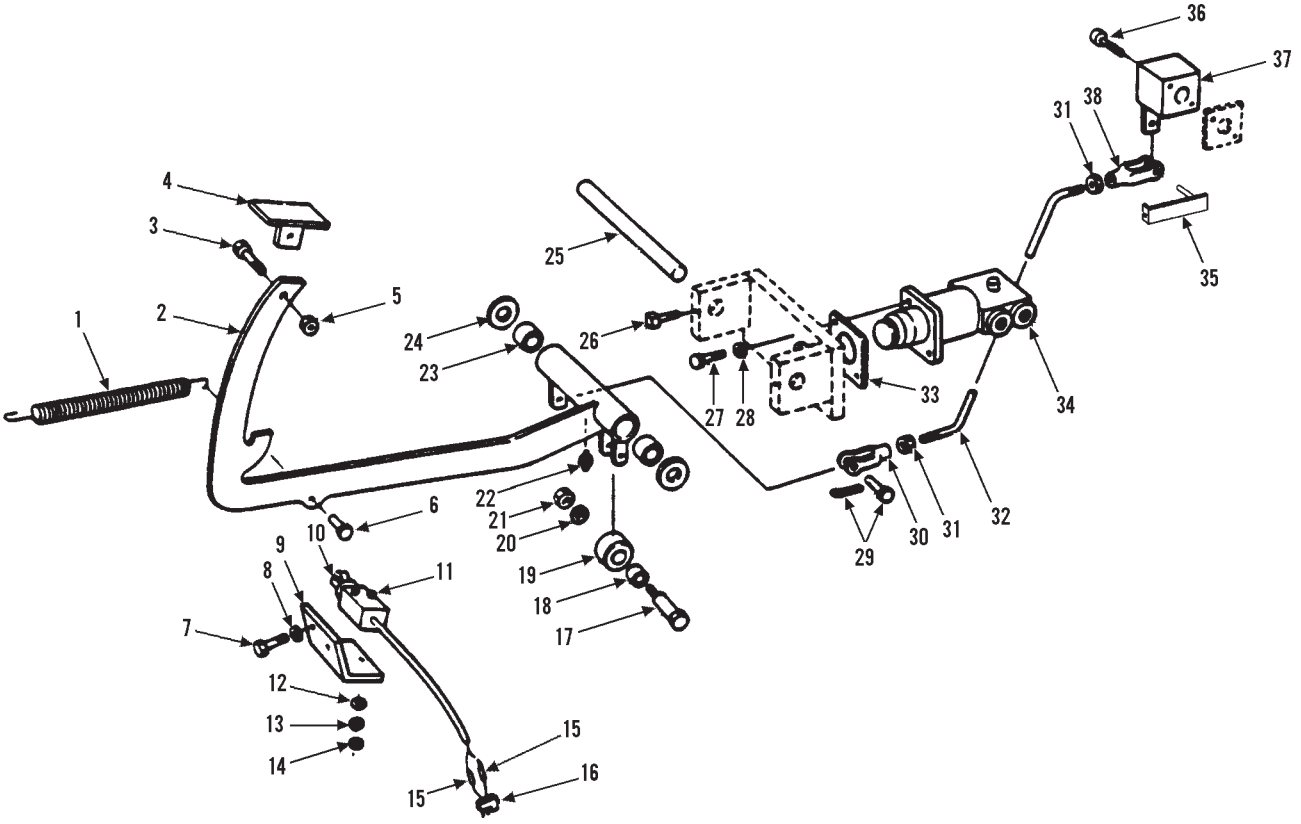

Item	Part No.	Qty.	Description Of Part
1	9104-3154	1	RETURN SPRING
2	9104-6057	1	BRAKE LEVER WELDMENT
3	8820-1068	1	HEX HD CAPSCREW, 1/2-13X1 3/4 GR5
4	9020-1463	1	PEDAL WELDMENT
5	8850-1008	1	HEX NUT, 1/2-13
6	8863-3002	1	YOKE PIN, 5/16
7	8820-1003	2	HEX HD CAPSCREW, 1/4-20X3/4, GR5
8	8855-1009	2	LOCKWASHER, 1/4
9	9103-1232	1	SWITCH MOUNTING BRACKET
*10	9103-3439	1	TRANSMISSION DISCONNECT SWITCH
11	8821-1032	2	SOCKET HD CAPSCREW, #10-24, GR8
12	8856-1105	2	FLAT WASHER, #10
13	8855-1007	2	LOCKWASHER, #10
14	8850-1612	2	HEX NUT, #10-24
15	8668-3480	2	CRIMP ON CONNECTOR
16	8348-3114	1	MALE CONNECTOR
17	8825-1023	1	SOCKET HD SHOULDER SCREW 3/8X1 1/2, 5/16-18 THREAD
18	9104-3086	1	BEARING
19	9104-1196	1	ROLLER
20	8855-1010	1	LOCKWASHER, 5/16

Item	Part No.	Qty.	Description Of Part
21	8850-1005	1	HEX NUT, 5/16-18
22	8867-1008	1	LUBE FITTING, STRAIGHT, 1/4-28
23	9020-0290	2	BEARING
24	9002-8662	2	WASHER
25	9020-1562	1	PIN
26	8844-1001	2	SQUARE HD SET SCREW, 1/4-20X1/2 (cup point)
27	8319-1028	2	HEX HD CAPSCREW, M8X1.25
28	8319-1011	2	LOCKWASHER, M8
29	9002-1558	1	CLEVIS PIN & COTTER PIN
30	8882-1004	2	ADJUSTABLE YOKE END, 3/8-24
31	8850-1406	6	HEX JAM NUT, 5/16-24
32	9103-1085	1	ROD
33	9104-1197	2	SHIM
34		Ref	BRAKE VALVE ASSY (see page 10-21 for details)
35	9002-7987	1	CLEVIS SPRING
36	8821-2228	2	SOCKET HD CAPSCREW, 5/16-18X1 1/4, GR8
37	9103-3096	1	INCHING VALVE
	9103-4018	1	INCHING VALVE SEAL KIT

** Revised part number on item 10.*

BRAKE PEDAL & INCHING LINKAGE

Starting Serial No. 0144337H
Original Isuue 4-88
Revised 6-8-06

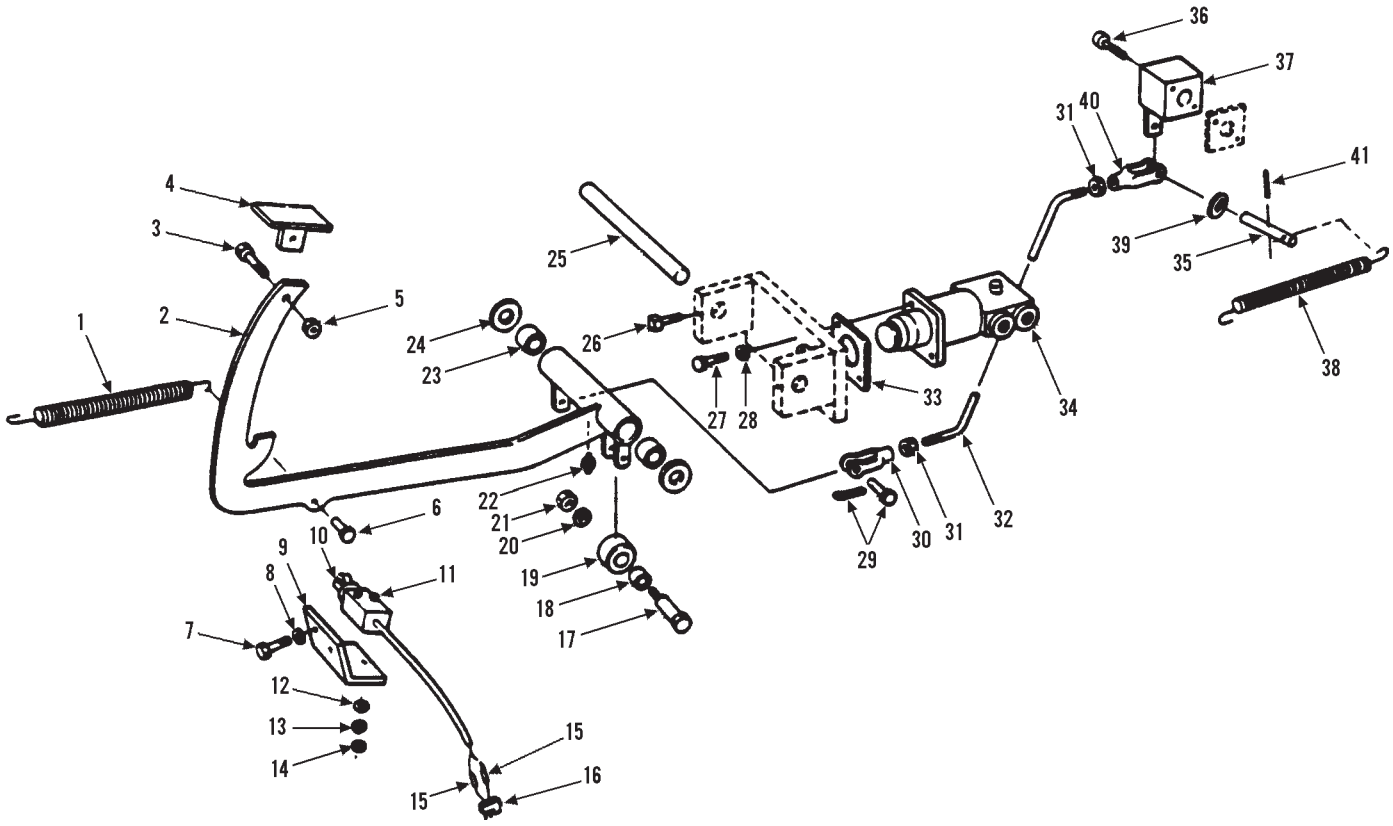

Item	Part No.	Qty.	Description Of Part
1	9104-3214	1	RETURN SPRING
2	9104-6083	1	BRAKE LEVER WELDMENT
3	8820-1068	1	HEX HD CAPSCREW, 1/2-13X1-3/4 GR5
4	9020-1463	1	PEDAL WELDMENT
5	8850-1008	1	HEX NUT, 1/2-13
6	9104-1402	1	SPECIAL CLEVIS PIN
7	8820-1003	2	HEX HD CAPSCREW, 1/4-20X3/4, GR5
8	8855-1009	2	LOCKWASHER, 1/4
9	9104-1431	1	SWITCH MOUNTING BRACKET
*10	9103-3439	1	TRANSMISSION DISCONNECT SWITCH
11	8821-1032	2	SOCKET HD CAPSCREW, #10-24, GR8
12	8856-1105	2	FLAT WASHER, #10
13	8855-1007	2	LOCKWASHER, #10
14	8850-1612	2	HEX NUT, #10-24
15	8668-3480	2	CRIMP ON CONNECTOR
16	8348-3114	1	MALE CONNECTOR
17	8825-1023	1	SOCKET HD SHOULDER SCREW 3/8X1-1/2, 5/16-18 THREAD
18	9104-3086	1	BEARING
19	9104-1196	1	ROLLER
20	8855-1010	1	LOCKWASHER, 5/16
21	8850-1005	1	HEX NUT, 5/16-18
22	8867-1008	1	LUBE FITTING, STRAIGHT, 1/4-28

Item	Part No.	Qty.	Description Of Part
23	9020-0290	2	BEARING
24	9002-8662	2	WASHER
25	9020-1562	1	PIN
26	8844-1001	2	SQUARE HD SET SCREW, 1/4-20X1/2 (cup point)
27	8319-1028	2	HEX HD CAPSCREW, M8X1.25
28	8319-1011	2	LOCKWASHER, M8
29	9002-1558	1	CLEVIS PIN & COTTER PIN
30	8882-1004	2	ADJUSTABLE YOKE END, 3/8-24
31	8850-1406	6	HEX JAM NUT, 5/16-24
32	9103-1085	1	ROD
33	9104-1197	2	SHIM
34		Ref	BRAKE VALVE ASSY (see page 10-21 for details)
35	9104-1425	1	SPECIAL CLEVIS PIN
36	8821-2228	2	SOCKET HD CAPSCREW, 5/16-18X1-1/4, GR8
37	9103-3096	1	INCHING VALVE
	9103-4018	1	INCHING VALVE SEAL KIT
38	9020-7801	1	SPRING
39	8856-1004	1	FLAT WASHER, 3/8
40	9104-1424	1	SPECIAL YOKE END
41	8863-1303	1	COTTER PIN, 1/16X1

** Revised part number on item 10.*

PARKING BRAKE and CONTROL

Starting Serial No. 8344001L
thru Serial No. 8744114G
Excluding Serial No. 8744079G
Revised 7-1-99

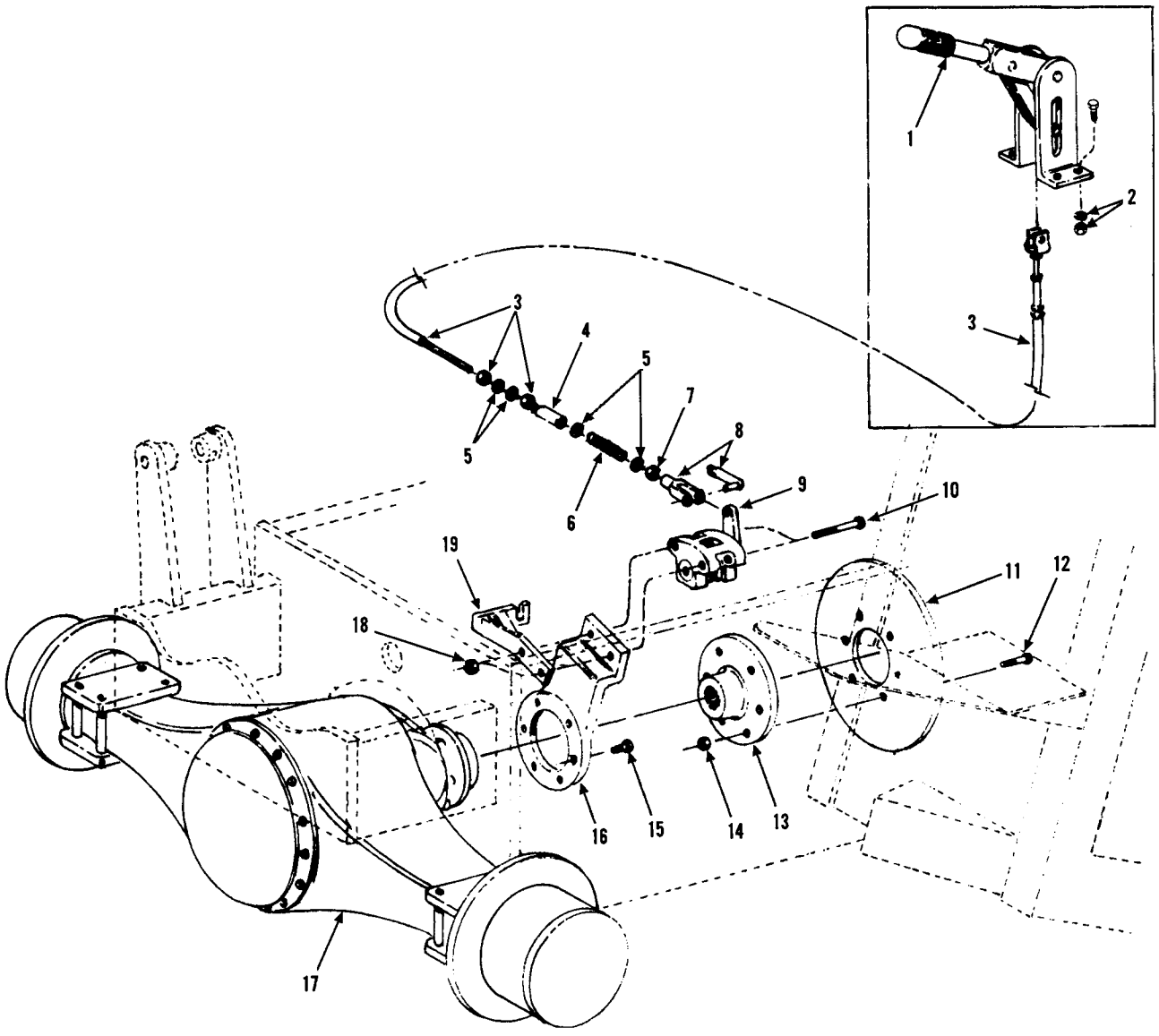

Item	Part No.	Qty.	Description Of Part
1	9020-6029	1	PARKING BRAKE LEVER
2	8820-1037	4	HEX HD CAPSCREW, 3/8-16X1 1/2 GR5
	8850-1006	4	HEX NUT, 3/8-16
	8855-1011	4	LOCKWASHER, 3/8
3	9103-3253	1	CABLE
4	9020-7356	1	BOOT
5	8856-1109	3	FLAT WASHER, 3/8
6	9020-1831	1	SPRING
7	8850-1406	1	HEX JAM NUT, 3/8-24
8	8882-1004	1	ADJUSTABLE YOKE END
	9002-7987	1	SPRING CLEVIS
9	9040-1570	1	EMERGENCY BRAKE CALIPER (see page 8-8 for details)

Item	Part No.	Qty.	Description Of Part
10	9103-1003	2	BOLT, 1/2X5 1/2
11	9061-0038	1	BRAKE DISC
12	8820-1037	6	HEX HD CAPSCREW, 3/8-16X1 1/2 GR5
13	9041-0247	1	YOKE
14	8850-1006	6	HEX NUT, 3/8-16
15	9020-8133	5	BOLT, HM 14X1.5
	9020-8134	1	BOLT, GM 12X1.5
16	9061-0039	1	EMERGENCY BRAKE MOUNTING BRACKET
17	9020-7905	1	FRONT AXLE (see pages 6-12 thru 6-14 for details)
18	8850-1108	2	HEAVY HEX JAM NUT, 1/2-13
19	9041-0283	1	CABLE MOUNTING BRACKET

BRAKE CYLINDER and BOOSTER

Starting Serial No. 8344001L
Revised 7-1-99

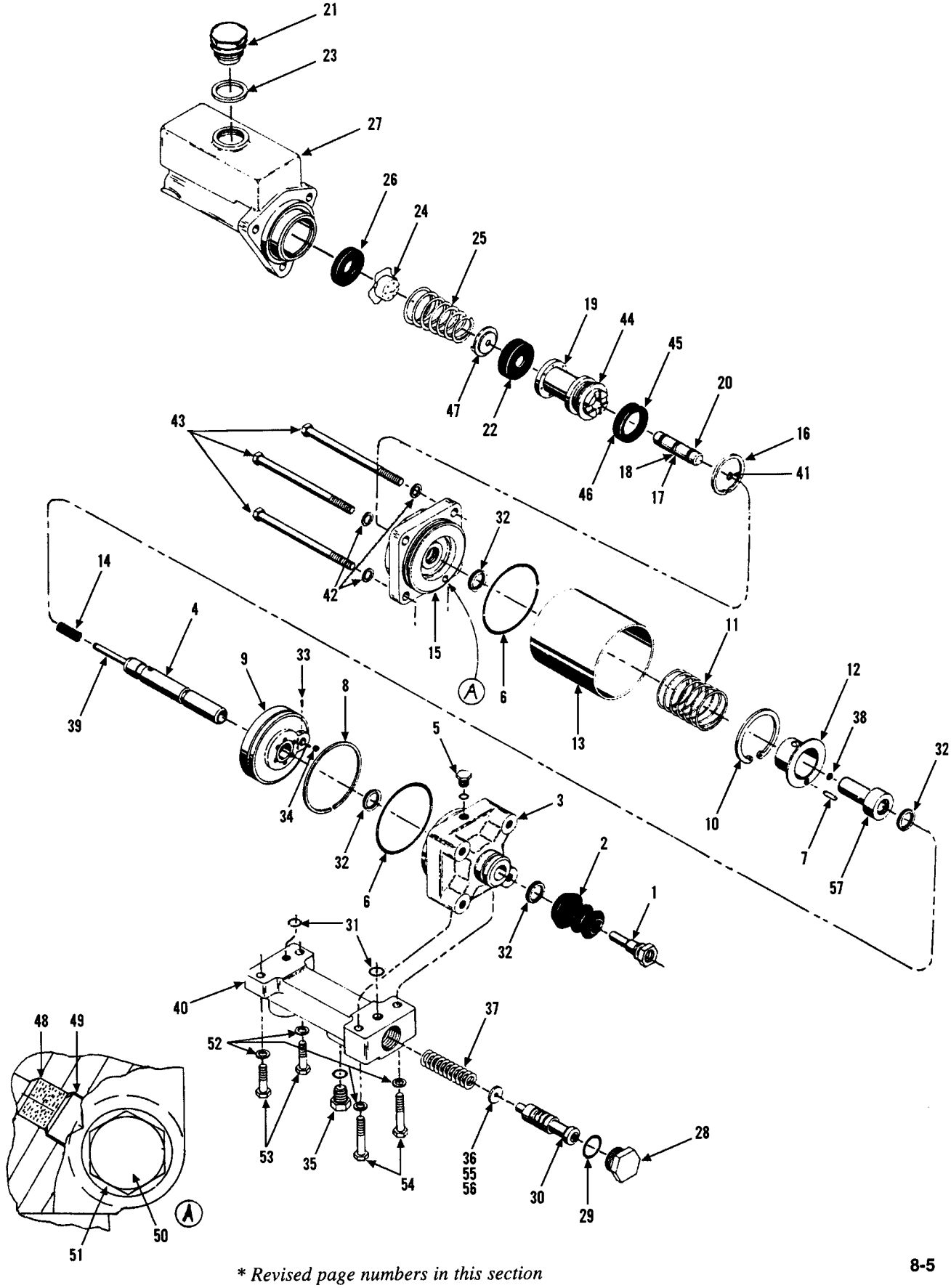

Item	Part No.	Qty.	Description Of Part
	9020-7810	1	BOOSTER & BRAKE MASTER CYLINDER ASSEMBLY
1	9020-8074	1	PUSH ROD
2	9020-8075	1	BOOT
3		1	HOUSING
4		1	PISTON
5		1	PLUG
6		1	O-RING
7		1	PIN
8		1	PISTON RING
9		1	PISTON
10		1	RETAINING RING
11		1	SPRING
12		1	RETAINER
13		1	TUBE
14		1	SPRING
15		1	HOUSING
16	9020-8089	1	RETAINING RING
17	9020-8090	1	BACK-UP RING
18	9020-8091	1	0-RING
19	9020-8092	1	PISTON
20	9020-8093	1	PISTON
21	9020-8094	1	FILLER PLUG
22	9020-8095	1	CUP
23	9020-8096	1	GASKET
24	9020-8097	1	CHECK VALVE
25	9020-8098	1	SPRING
26	9020-8099	1	SEAT
27	9020-8100	1	HOUSING
28		1	PLUG
29		1	O-RING
30		1	SPOOL
31		2	O-RING
32		4	CUP
33		1	PIN
34		1	BALL
35		1	PLUG
36		1	SHIM (as required)
37		1	SPRING
38		1	O-RING
39		1	ROD
40		1	HOUSING
41	9020-8114	1	RETAINING RING
42		3	LOCKWASHER
43		3	CAPSCREW
44		AR	SILICONE GREASE
45	9020-8118	1	CUP
46	9020-8119	2	CUP
47	9020-8120	1	RETAINER
48		1	SNUBBER
49		1	RETAINER
50		4	CAPSCREW
51		4	LOCKWASHER
52		4	LOCKWASHER
53		2	CAPSCREW
54		2	CAPSCREW
55		AR	SHIM
56		AR	SHIM
57			PISTON
	9020-8131	AR	REPAIR KIT (consists of items 16 thru 20, 22 thru 24, 26, and 45 thru 47)
58	9103-4056		MASTER CYLINDER ASSEMBLY (consists of items 16 thru 27, 41, and 44 thru 47)

BRAKE CYLINDER and BOOSTER

Starting Serial No. 8744013G
Excluding Serial No. 8744079G
Original Issue 11-86
Revised 1-23-04

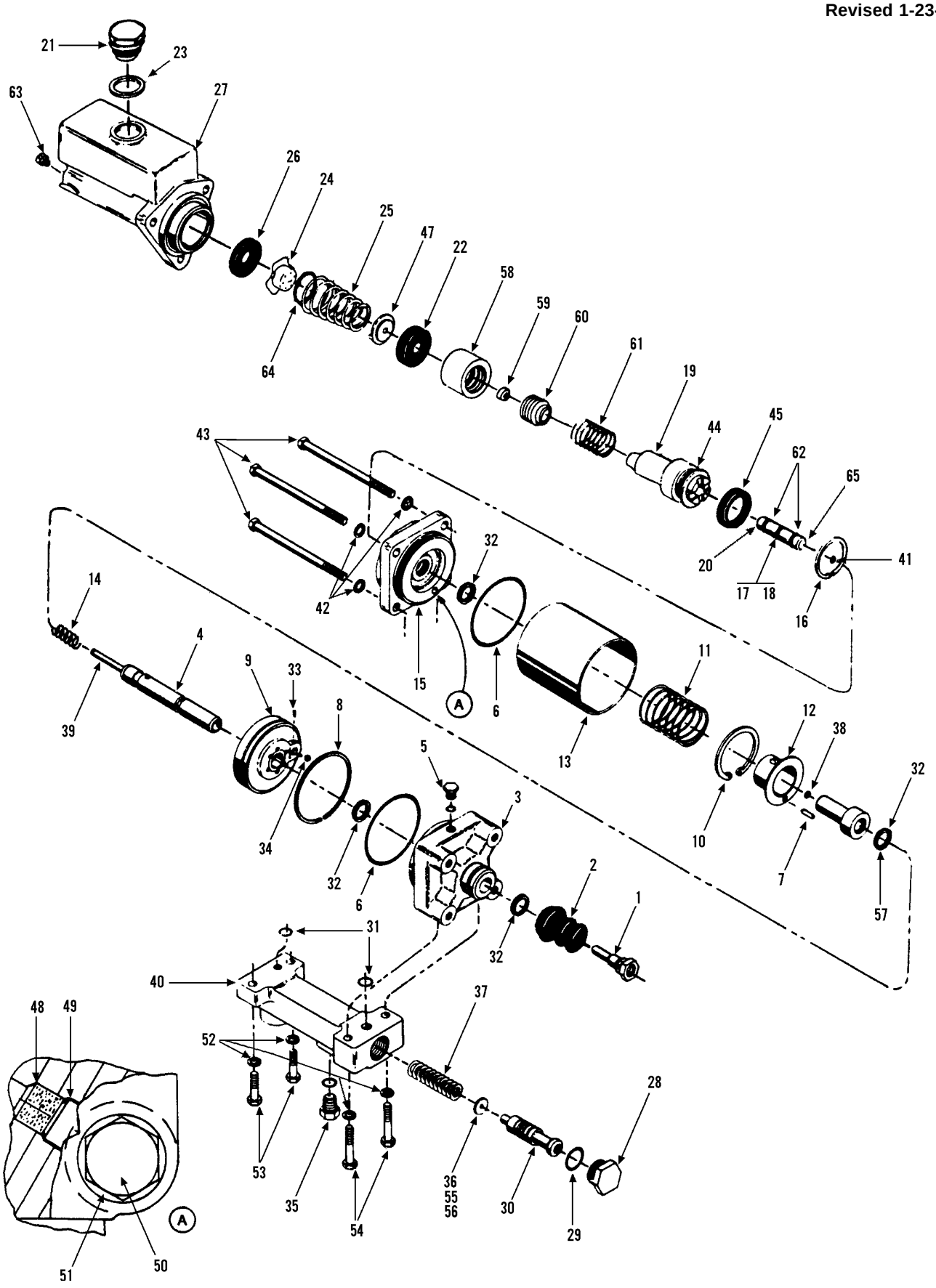

** Revised inclusion note on Booster Seal Kit.*

BRAKE CYLINDER and BOOSTER

Starting Serial No. 8744013G
Excluding Serial No. 8744079G
Original Issue 11-86
Revised 1-23-04

Item	Part No.	Qty.	Description Of Part
	9103-3275	1	BOOSTER & BRAKE MASTER CYLINDER ASSY (includes all items)
	9103-4079	AR	REPAIR KIT (includes items 16, 17, 18, 20, 22, 23, 26, 45, 58, 59, 60, 62 & 64)
	9103-4088	AR	MASTER CYLINDER ASSY (includes items 16 thru 27, 41, 44, 45, 47 & 58 thru 64)
*	9020-8132	AR	BOOSTER SEAL KIT (includes items 2, 6, 8, 29, 31, 32, 35, & 38)
1	9020-8074	1	PUSH ROD
2	9020-8075	1	BOOT
3		1	HOUSING
4		1	PISTON
5		1	PLUG
6		1	O-RING
7		1	PIN
8		1	PISTON RING
9		1	PISTON
10		1	RETAINING RING
11		1	SPRING
12		1	RETAINER
13		1	TUBE
14		1	SPRING
15		1	HOUSING
16	9103-4080	1	RETAINING RING
17	9020-8090	1	BACK-UP RING
18	9020-8091	1	O-RING
19	9103-4093	1	PISTON
20	9103-4084	1	PISTON
21	9020-8094	1	FILLER PLUG
22	9020-8095	1	CUP
23	9020-8096	1	GASKET
24	9020-8097	1	CHECK VALVE
25	9103-4095	1	SPRING
26	9020-8099	1	SEAT
27	9103-4096	1	HOUSING
28		1	PLUG
29		1	O-RING
30		1	SPOOL
31		2	O-RING

Item	Part No.	Qty.	Description Of Part
32		4	CUP
33		1	PIN
34		1	BALL
35		1	PLUG
36		AR	SHIM
37		1	SPRING
38		1	O-RING
39		1	ROD
40		1	HOUSING
41	9020-8114	1	RETAINING RING
42		3	LOCKWASHER
43		3	CAPSCREW
44		AR	SILICONE GREASE
45	9103-4081	1	CUP
47	9020-8120	1	RETAINER
48		1	SNUBBER
49		1	RETAINER
50		4	CAPSCREW
51		4	LOCKWASHER
52		4	LOCKWASHER
53		2	CAPSCREW
54		2	CAPSCREW
55		AR	SHIM
56		AR	SHIM
57		1	PISTON
58	9103-4086	1	PISTON
59	9103-4087	1	SEAT
60	9103-4085	1	RETAINER
61	9103-4094	1	SPRING
62	9020-8119	2	CUP
63	9103-4092	1	CONNECTOR
64	9103-4082	1	O-RING
65	9103-4090	1	RETAINING RING
	9103-4091	1	WASHER
			NOTE: ONLY ITEMS WITH PART NUMBERS ARE AVAILABLE FOR SERVICE.

** Revised inclusion note on Booster Seal Kit.*

SERVICE BRAKE-SOMA AXLE

Starting Serial No. 8344001L
Revised 8-21-06

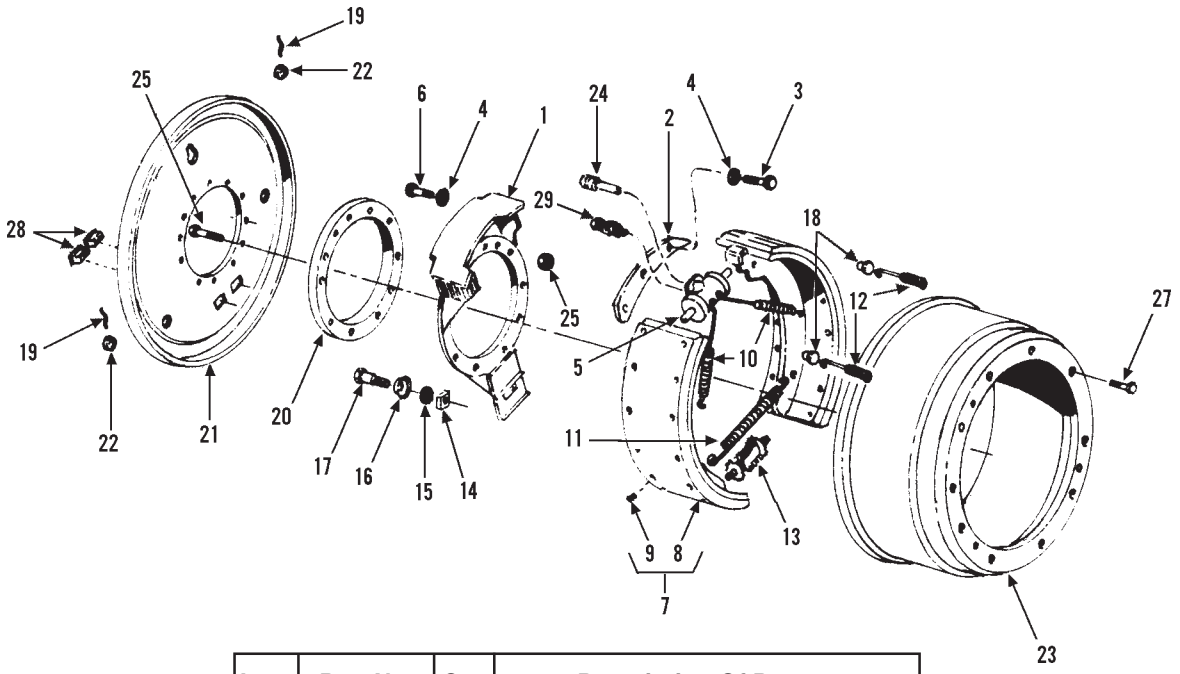

Item	Part No.	Qty.	Description Of Part
	9020-3894	Ref	BRAKE ASSEMBLY (includes all items)
	9020-7951	Ref	REPAIR KIT (wheel cylinder w/o piston)
	9020-7952	Ref	REPAIR KIT (wheel cylinder w/piston)
1	9020-7945	1	BACKING PLATE
2	9020-3897	1	SPRING ATTACHMENT PLATE
3	9020-3899	2	BOLT HM 8X18
4	9020-3900	4	WASHER, W-5
5	9020-3901	1	CYLINDER ASSEMBLY
6	9020-3902	2	BOLT HM 8X40
7	9020-3903	2	BRAKE SHOE ASSY (includes items 8 & 9)
8	9020-3904	2	BRAKE SHOE LINING
9	9020-3905	32	RIVET
10	9020-3906	2	SPRING
11	9020-3907	1	SPRING
12	9020-3908	2	SPRING
13	9020-3909	1	AUTOMATIC ADJUSTER
14	9020-3910	1	WASHER
15	9020-7946	1	SEAL
16	9020-3911	1	DUST BOOT
17	9020-3912	1	BOLT
18	9020-7947	2	SPRING GUIDE
19	9020-3914	2	SPRING RETAINER
20	9020-3915	1	BRAKE SPACER
21	9020-3916	1	DUST COVER
22	9020-3913	2	PLUG
23	9020-3917	1	BRAKE DRUM (ID 400 MM minimum)
24	9020-3919	1	BLEEDER SCREW
25	9040-1237	11	NUT M 14X1.50
26	9040-1228	11	BOLT HM 14X1.50X60/30
27	9020-3918	3	BOLT F 90 HM 10X1.50X25
28	9020-7950	2	PLUG
29	9020-3920	1	BANJO FITTING (with bolt)
*			NOTE: QUANTIES SHOWN ARE FOR ONE SIDE ONLY.

** Added note to bottom of parts list.*

PARKING BRAKE CALIPER

Starting Serial No. 8344001L
thru Serial No. 8744114G
Excluding Serial No. 8744079G
Revised 7-1-99

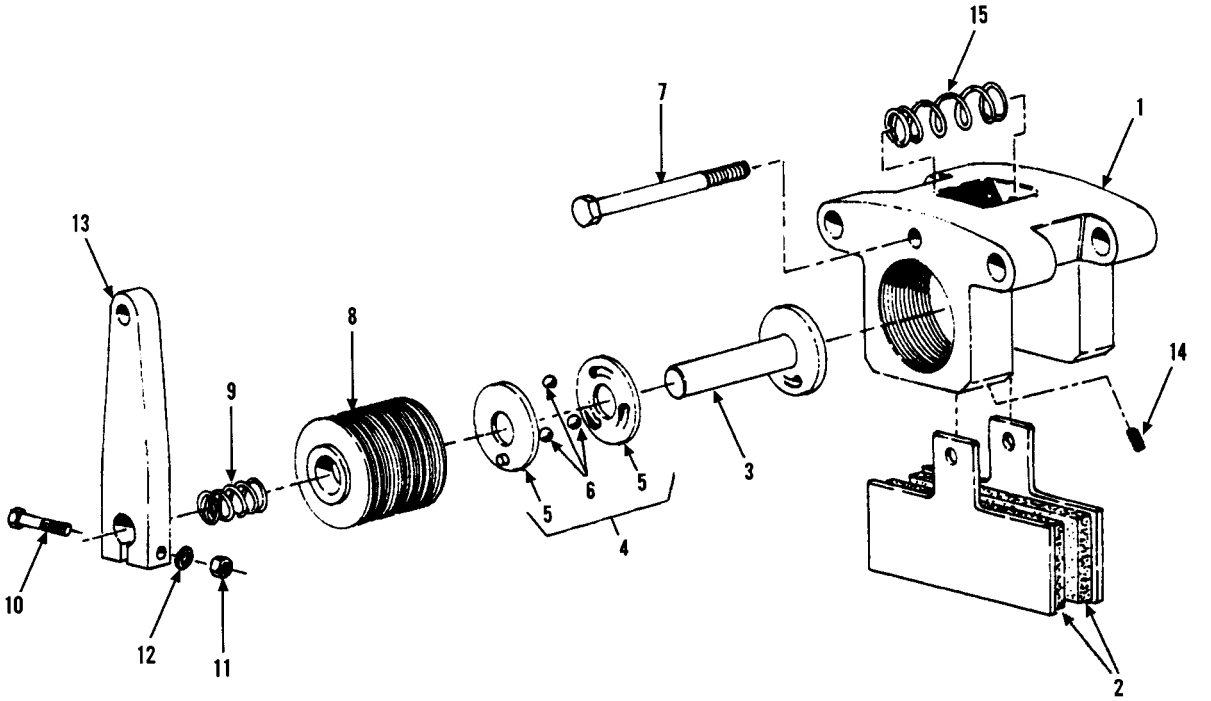

Item	Part No.	Qty.	Description Of Part
	9040-1570		PARKING BRAKE CALIPER
1	NSS	1	CALIPER HOUSING
2	9020-1927	2	LINING
3	9040-1466	1	PISTON
4	9040-1463		REPAIR KIT (includes items 5 & 6)
5	9040-1465	2	CAM PLATE
6	9040-1464	3	BALL
7	9020-3190	1	BOLT
8	NSS	1	BODY
9	9040-1462	1	SPRING
10	9020-3191	1	BOLT
11	9020-3192	1	NUT
12	9020-3193	1	WASHER
13	9040-1461	1	LEVER
14	9040-1460	1	SETSCREW
15	9040-1459	1	SPRING

** Changed page number from 8-8 to 8-7.*

PARKING BRAKE CONTROL (MICO LOCK)

Starting Serial No. 8344001L
thru Serial No. 8744114G
Excluding Serial No. 8744079G
Revised 7-1-99

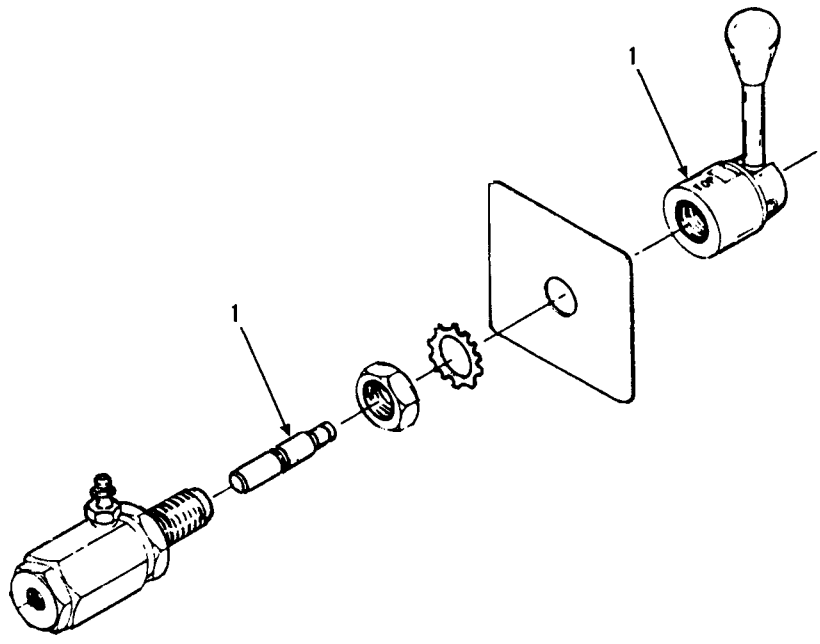

Item	Part No.	Qty.	Description Of Part
	9040-0835	1	BRAKE CONTROL VALVE (mico-lock)
1	9020-3341	-	REPAIR KIT

** Changed page number from 8-9 to 8-8.*

HYDRAULIC CIRCUITS
Tank to pump, drive motor drains & return to tank
Starting Serial No. 8344001L
Thru Serial No. 8444277
Revised 7-16-99

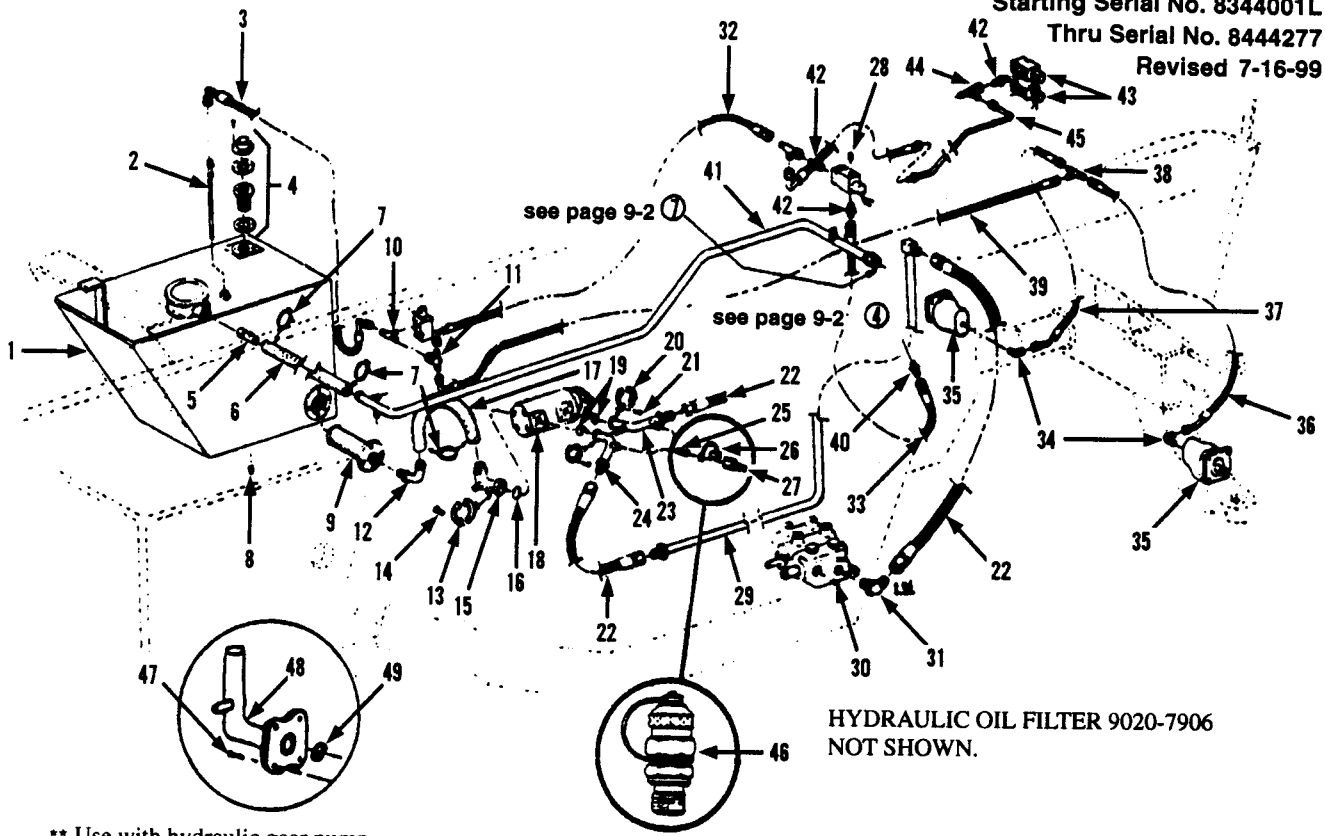

** Use with hydraulic gear pump 9103-3156. Replaces items 13, 14, 15, & 16.

SERVICE NOTE:

Item 18, 9020-7615 is no longer availlable from the vendor. It is replaced by 9103-3226, however it is not positioned the same. In order to attach the new pump to the hydraulic reservoir, one of the following kits will be needed. You will need to know the measurement from the front plate on your machine to the front edge of the hole on frame rail as shown to order the correct kit for your installation.

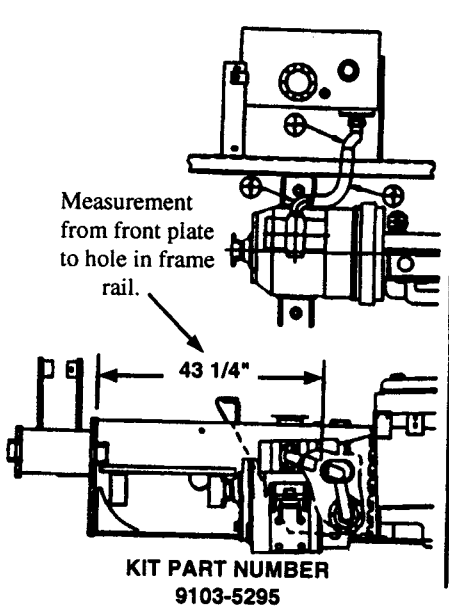

KIT PART NUMBER
9103-5295

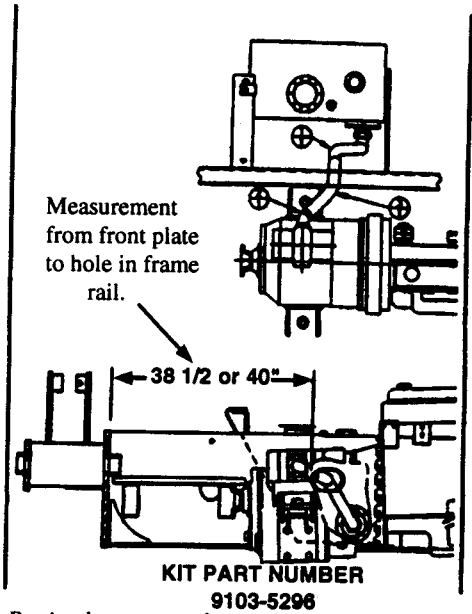

KIT PART NUMBER
9103-5296

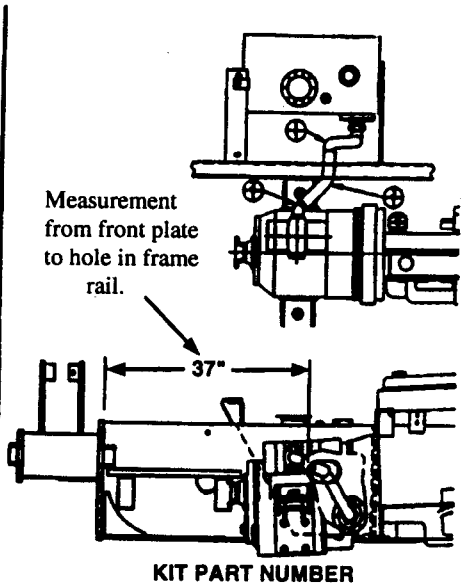

KIT PART NUMBER
9103-5297

534B PUMP MODIFICATION KITS

Part No.	Qty.	Description Of Part
9103-5295	Ref	PUMP MODIFICATION KIT (includes the following parts)
9103-3531	1	TUBE ASSY
9103-3533	1	ELBOW, 90 DEGREES
7736-3065	1	SUCTION HOSE, 2"

Part No.	Qty.	Description Of Part
9103-5296	Ref	PUMP MODIFICATION KIT (includes the following parts)
9103-3477	1	TUBE ASSY
9103-3534	1	ELBOW, 45 DEGREES
8367-3079	1	SUCTION HOSE, 2"

Part No.	Qty.	Description Of Part
9103-5297	Ref	PUMP MODIFICATION KIT (includes the following parts)
9103-3532	1	TUBE ASSY
9103-3049	1	TUBE ASSY
9103-3125	1	SUCTION HOSE, 2"

Item	Part No.	Qty.	Description Of Part
*	9103-5295	1	PUMP MODIFICATION KIT (for mach. with 43-1/4" spacing)(see illustration)
*	9103-5296	1	PUMP MODIFICATION KIT (for mach. with 38-1/2" or 40" spacing)(see illust.)
*	9103-5297	1	PUMP MODIFICATION KIT (for mach. with 37" spacing)(see illustration)
1	9103-5023	1	OIL TANK (includes items 2, 4, 5, 8, & 9)
2	9040-3419	1	STANDPIPE
3	9020-7599	1	**HIGH PRESSURE HOSE
4	9020-5222	1	DIPSTICK/FILLER (includes cap, screen, gaskets & hardware)
5	9020-5776	1	ADAPTER (tank to low pressure line)
6	9020-7365	1	LOW PRESSURE HOSE
7	9002-8482	4	HOSE CLAMP
8	8871-1255	1	SQ. HD PIPE PLUG, 1"
9	9020-7686	1	OIL FILTER SCREEN
10	8866-1245	1	MALE OUTLET TEE, 3/8X1/2 TUBE
11	8866-2225	1	SWIVEL NUT BRANCH TEE, 1/2 TUBE
12	9002-6632	1	TUBE ASSY
13	8471-1342	2	FLANGE CLAMP
14	8820-1067	4	HEX HD CAPSCREW, 1/2-13X1-1/2, GR5
15	9020-7688	1	TUBE ASSY
16	9002-3223	1	O-RING
17	9020-7687	1	LOW PRESSURE HOSE
18	~~**9020-7615**~~	**1**	**MAIN HYDRAULIC PUMP (NO LONGER AVAILABLE, SEE BELOW)**
	9103-3226	**1**	**MAIN HYDRAULIC PUMP (ORDER CORRECT MODIFICATION KIT TO INSTALL)**(Items in kit will be used in place of items 12 thru 17)
19	8859-1019	2	O-RING
20	8471-1369	4	FLANGE CLAMP

Item	Part No.	Qty.	Description Of Part
21	8820-1036	8	HEX HD CAPSCREW, 3/8-16X1-1/4, GR5
22	9002-2045	3	**HIGH PRESSURE HOSE
23	9020-7689	1	TUBE ASSY
24	9020-7691	1	TUBE ASSY
25	8870-1002	2	CLOSE NIPPLE, 1/4X7/8
26	9020-7330	2	CAP
27	9020-7329	2	QUICK DISCONNECT (aeroquip)
28	9002-7266	1	PLUG
29	9020-7692	1	TUBE ASSY
30	9103-3168	1	MAIN HYD CONTROL VALVE
31	8866-2070	1	ELBOW, 90 DEGREES (includes o-ring)
	8859-1210	1	O-RING
32	9020-7694	1	HIGH PRESSURE HOSE
33	9020-7491	1	HIGH PRESSURE HOSE
34	8866-2064	2	ELBOW, 90 DDEGREES (includes o-ring)
	8859-1204	2	O-RING
35	9020-6748	2	HYDRAULIC DRIVE MOTOR
36	8471-7586	1	HIGH PRESSURE HOSE
37	8471-7587	1	HIGH PRESSURE HOSE
38	8866-1306	1	UNION TEE, 1/2 TUBE
39	9020-7765	1	HIGH PRESSURE HOSE
40	8874-3002	1	MALE ADAPTER, 1/4X3/8 TUBE
41	9020-7363	1	TUBE ASSY
42	9002-9915	3	STRAIGHT CONNECTOR
43	9020-6739	4	SOLENOID VALVE
44	8866-2239	2	SWIVEL NUT RUN TEE, 1/2 TUBE
45	9020-7712	1	TUBE ASSY
46	9103-3032	2	MINI-CHECK (stauff)
47	8820-1067	4	HEX HD CAPSCREW, 1/2-13X1-1/2, GR5
48	9103-3178	1	SUCTION TUBE & FLANGE
49	9002-8225	1	O-RING

HYDRAULIC CIRCUITS

Tank to pump, drive motor drains & return to tank

Starting Serial No. 8444278G Thru 8744114G
Excluding S/N 8744079G
Original Issue 2-85
Revised 7-16-99

SERVICE NOTE:

Refer to page 9-1 for pump modification kits needed when replacing item 19.

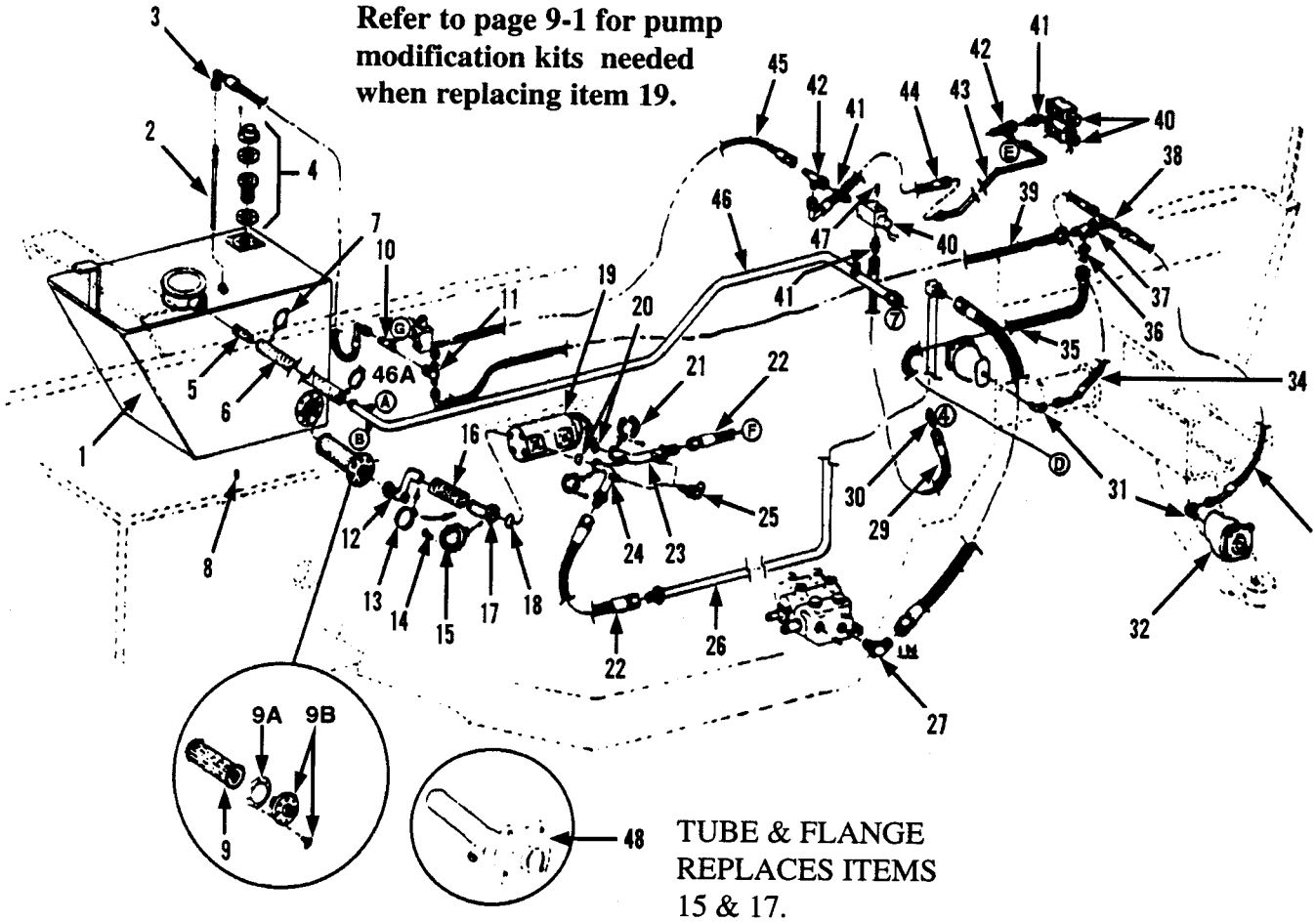

TUBE & FLANGE
REPLACES ITEMS
15 & 17.

A - see page 9-10 & 9-10A
B - see page 9-2 & 9-2A
D - see page 9-10A
E - see page 9-10A
F - see page 9-2 & 9-2A
G - see page 9-10 & 9-10A
4 - see page 9-2 & 9-2A
7 - see page 9-2 & 9-2A

** Changed the page number from 9-1A to 9-1.*

HYDRAULIC CIRCUITS

Tank to pump, drive motor drains & return to tank

Starting Serial No. 8744115G
Also S/N 8744079G
Original Issue 8-87
Revised 7-16-99

SERVICE NOTE:

Refer to page 9-1 for pump modification kits needed when replacing item 17.

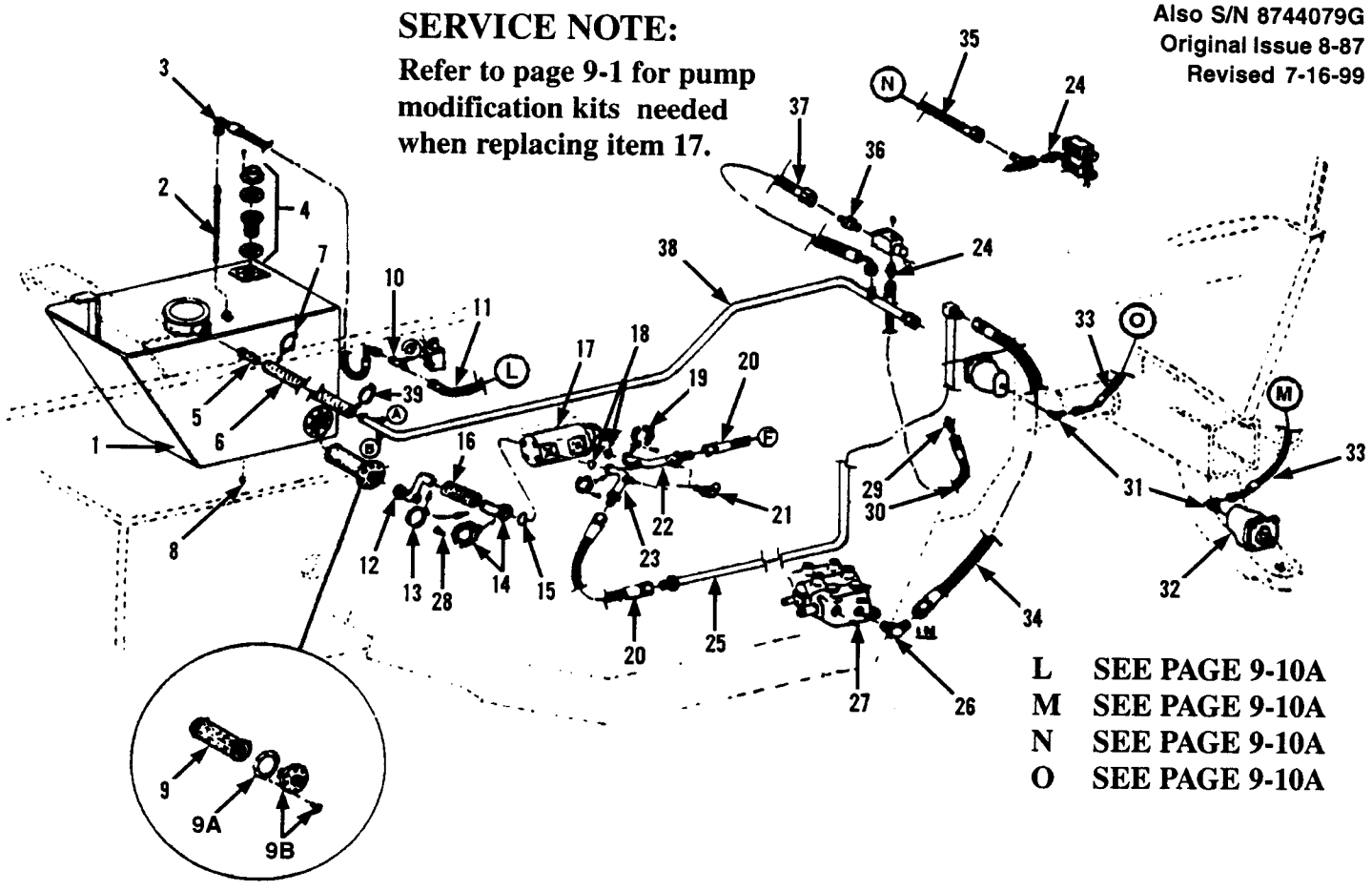

L SEE PAGE 9-10A
M SEE PAGE 9-10A
N SEE PAGE 9-10A
O SEE PAGE 9-10A

Item	Part No.	Qty.	Description Of Part
1	9103-6002	1	HYDRAULIC OIL TANK
2	9040-3419	1	STANDPIPE
3	9020-7599	1	HIGH PRESSURE HOSE
4	9020-5222	1	DIPSTICK/FILLER (includes cap, screen, gaskets & hardware)
5	9020-5776	1	ADAPTER (tank to low pressure line)
6	9020-7365	1	LOW PRESSURE HOSE
7	9002-8482	2	HOSE CLAMP
8	8871-1255	1	SQ. HD PIPE PLUG, 1"
9	9041-0295	1	SUCTION FILTER
9A	9041-0294	1	GASKET
9B	9103-6003	1	FLANGE
	8820-1035	8	HEX HD CAPSCREW, 3/8-16X1, GR5
	8855-1011	8	LOCKWASHER, 3/8
10	8866-1245	1	MALE OUTLET TEE, 3/8X1/2 TUBE
11	8471-7520	1	HOSE ASSY
12	9103-3257	1	ELBOW
13	9002-8720	2	HOSE CLAMP
14	9103-3049	1	TUBE ASSY
	9103-1079	1	FLANGE (one piece)
15	9002-8225	1	O-RING
16	9103-3125	1	LOW PRESSURE HOSE
17	~~9020-7615~~	1	**MAIN HYDRAULIC PUMP (NO LONGER AVAILABLE, SEE BELOW)**
	9103-3226	1	**MAIN HYDRAULIC PUMP (ORDER CORRECT MODIFICATION KIT TO INSTALL)**(see service note on page 9-1 S/N 8344001L for further instructions)

Item	Part No.	Qty.	Description Of Part
18	8859-1207	2	O-RING
19	8471-1369	4	CLAMP
20	9002-2045	3	HIGH PRESSURE HOSE
21	9103-3032	2	MINI CHECK (stauff)
22	9020-7689	1	TUBE ASSY
23	9020-7691	1	TUBE ASSY
24	9002-9915	2	CONNECTOR
25	9103-3069	1	TUBE ASSY
	9020-0481	2	CLAMP
	8820-1033	2	HEX HD CAPSCREW, 3/8-16X3/4, GR5
26	8866-2070	1	ELBOW, 90 DEGREES (includes o-ring)
	8859-1210	1	O-RING
27	9103-3168	1	MAIN CONTROL VALVE (see page 10-7 for details)
28	8820-1067	4	HEX HD CAPSCREW, 1/2-13X1-1/2, GR5
29	8874-3002	1	MALE ADAPTER, 1/4X3/8 TUBE
30	9020-7491	1	HOSE ASSY
31	8866-2064	2	ELBOW, 90 DEGREES (includes o-ring)
	8859-1204	2	O-RING
32	9020-6748	2	DRIVE MOTOR (see page 10-16 for details)
33	8471-7577	2	HOSE ASSY
34	9002-2045	1	HOSE ASSY
35	7713-3198	1	HOSE ASSY
36	9002-9915	1	CONNECTOR
37	7713-3447	1	HOSE ASSY
38	9020-7363	1	TUBE ASSY
39	9020-5793	1	CLAMP ASSY

JJ

** Changed the page number from 9-1A to 9-1.*

HYDRAULIC CIRCUITS

Tank to pump, drive motor drains & return to tank

Starting Serial No. 8444278G Thru 8744114G
Excluding S/N 8744079G
Original Issue 2-85
Revised 7-16-99

Item	Part No.	Qty.	Description Of Part
1	9103-6002	1	HYDRAULIC OIL TANK
2	9040-3419	1	STANDPIPE
3	9020-7599	1	HIGH PRESSURE HOSE
4	9020-5222	1	DIPSTICK/FILLER (includes cap, screen, gaskets & hardware)
5	9020-5776	1	ADAPTER (tank to low pressure line)
6	9020-7365	1	LOW PRESSURE HOSE
7	9002-8482	2	HOSE CLAMP
8	8871-1255	1	SQ. HD PIPE PLUG, 1"
9	9041-0295	1	SUCTION FILTER
9A	9041-0294	1	GASKET
9B	9103-6003	1	FLANGE
	8820-1035	8	HEX HD CAPSCREW, 3/8-16X1, GR5
	8855-1011	8	LOCKWASHER, 3/8
10	8866-1245	1	MALE OUTLET TEE, 3/8X1/2 TUBE
11	8866-2225	1	SWIVEL NUT BRANCH TEE, 1/2 TUBE
12	9041-0298	1	ELBOW
13	9002-8720	2	HOSE CLAMP
14	8820-1067	4	HEX HD CAPSCREW, 1/2-13X1-1/2, GR5
	8855-1013	4	LOCKWASHER, 1/2
15	9103-1079	1	FLANGE (one piece)
16	9103-3125	1	LOW PRESSURE HOSE
17	9103-3049	1	TUBE LINE
18	9002-8225	1	O-RING
19	~~**9020-7615**~~	**1**	**MAIN HYDRAULIC PUMP (NO LONGER AVAILABLE, SEE BELOW)**
	7713-4059	1	GASKET
	9103-3226	**1**	**MAIN HYDRAULIC PUMP (ORDER CORRECT MODIFICATION KIT TO INSTALL)**(see service note on page 9-1 S/N 8344001L for further instructions)
20	8859-1207	2	O-RING

Item	Part No.	Qty.	Description Of Part
21	8471-1369	4	CLAMP
22	9002-2045	3	HIGH PRESSURE HOSE
23	9020-7689	1	TUBE ASSY
24	9020-7691	1	TUBE ASSY
25	9103-3032	2	MINI CHECK (stauff)
26	9103-3069	1	TUBE ASSY
	9020-0481	2	CLAMP
	8820-1033	2	HEX HD CAPSCREW, 3/8-16X3/4, GR5
27	9103-3168	1	MAIN CONTROL VALVE
28	8866-2070	1	ELBOW, 90 DEGREES (includes o-ring)
	8859-1210	1	O-RING
29	9020-7491	1	HIGH PRESSURE HOSE
30	8874-3002	1	MALE ADAPTER, 1/4X3/8 TUBE
31	8866-2064	2	ELBOW, 90 DEGREES (includes o-ring)
	8859-1204	2	O-RING
32	9020-6748	2	DRIVE MOTOR
33	8471-7586	1	HIGH PRESSURE HOSE
34	8471-7587	1	HIGH PRESSURE HOSE
35	7713-3167	1	HOSE (Perkins engine only)
36	8688-3469	1	REDUCER (Perkins engine only)
37	8866-2240	1	SWIVEL NUT RUN TEE, 1/2 TUBE
38	8866-1306	1	UNION TEE, 1/2 TUBE
39	9020-7765	1	HIGH PRESSURE HOSE
40	9020-6739	3	SOLENOID VALVE
41	9002-9915	2	CONNECTOR
42	8866-2239	2	SWIVEL NUT RUN TEE, 1/2 TUBE
43	9020-7712	1	TUBE ASSY
44	7713-3342	1	HOSE ASSY
45	9020-7694	1	HIGH PRESSURE HOSE
46	9020-7363	1	TUBE ASSY
46A	9020-5793	2	CLAMP ASSY
47	8871-1282	1	HEX SOCKET PIPE PLUG, 3/8
48	9103-3178	1	TUBE ASSY(S/N 8344001L-8444288G)
	9103-3177	1	TUBE ASSY(S/N 8444289G-8444491G)

HYDRAULIC CIRCUITS

Tank to pump, drive motor drains & return to tank

Starting Serial No. 0144452
Original Issue 1-89
Revised 7-16-99

SERVICE NOTE:
Refer to page 9-1 for pump modification kits needed when replacing item 17.

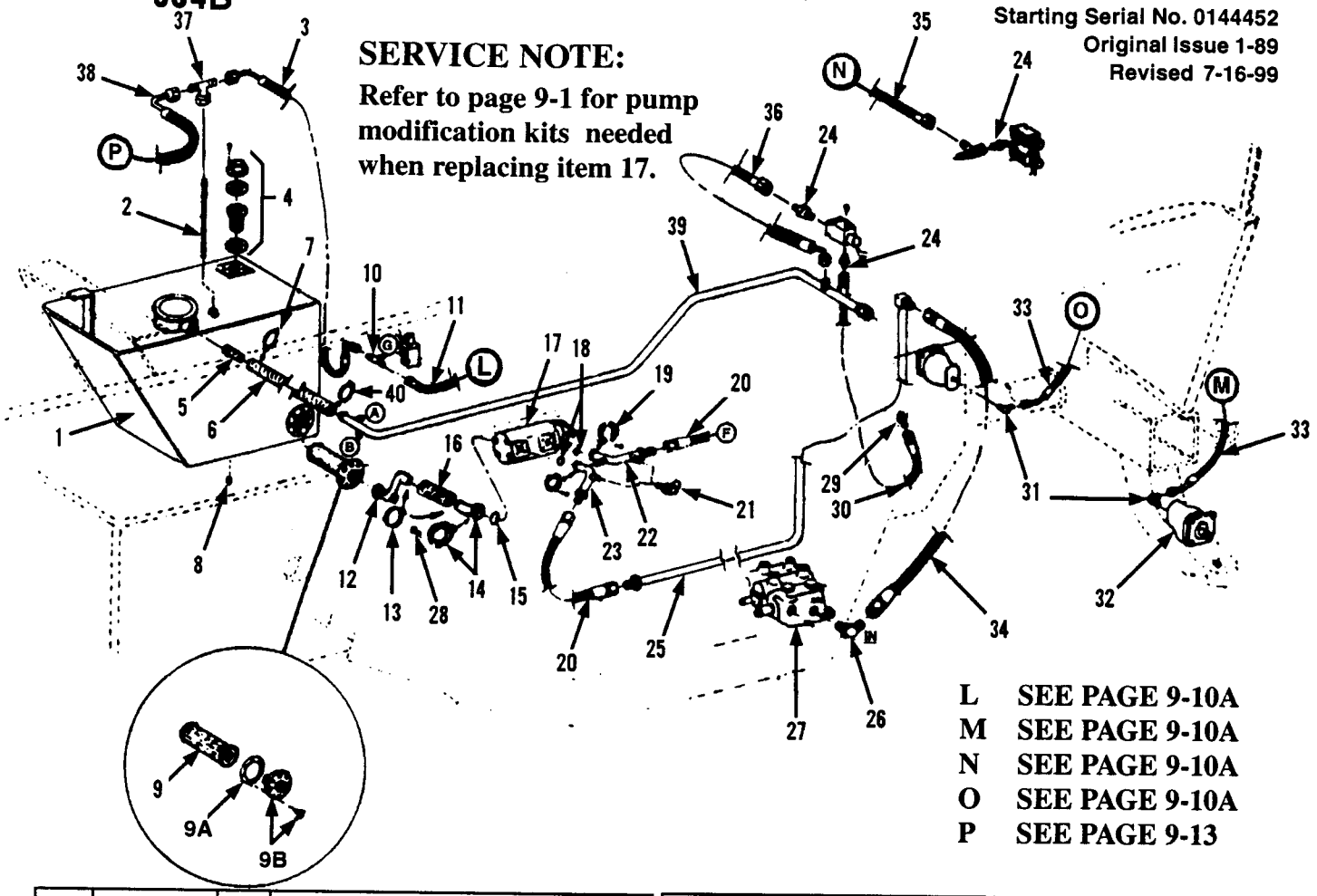

L SEE PAGE 9-10A
M SEE PAGE 9-10A
N SEE PAGE 9-10A
O SEE PAGE 9-10A
P SEE PAGE 9-13

Item	Part No.	Qty.	Description Of Part
1	9103-6002	1	HYDRAULIC OIL TANK
2	9040-3419	1	STANDPIPE
3	9020-7599	1	HIGH PRESSURE HOSE
4	9020-5222	1	DIPSTICK/FILLER (includes cap, screen, gaskets & hardware)
5	9020-5776	1	ADAPTER (tank to low pressure line)
6	9020-7365	1	LOW PRESSURE HOSE
7	9002-8482	2	HOSE CLAMP
8	8871-1255	1	SQ. HD PIPE PLUG, 1"
9	9041-0295	1	SUCTION FILTER
9A	9041-0294	1	GASKET
9B	9103-6003	1	FLANGE
	8820-1035	8	HEX HD CAPSCREW, 3/8-16X1, GR5
	8855-1011	8	LOCKWASHER, 3/8
10	8866-1245	1	MALE OUTLET TEE, 3/8X1/2 TUBE
11	8471-7520	1	HOSE ASSY
12	9103-3257	1	ELBOW
13	9002-8720	2	HOSE CLAMP
14	9103-3049	1	TUBE ASSY
	9103-1079	1	FLANGE (one piece)
15	9002-8225	1	O-RING
16	9103-3125	1	LOW PRESSURE HOSE
17	~~9020-7615~~	1	**MAIN HYDRAULIC PUMP (NO LONGER AVAILABLE, SEE BELOW)**
	9103-3226	1	**MAIN HYDRAULIC PUMP (ORDER CORRECT MODIFICATION KIT TO INSTALL)**(see service note on page 9-1 S/N 8344001L for further instructions)

Item	Part No.	Qty.	Description Of Part
18	8859-1207	2	O-RING
19	8471-1369	4	CLAMP
20	9002-2045	3	HIGH PRESSURE HOSE
21	9103-3032	2	MINI CHECK (stauff)
22	9020-7689	1	TUBE ASSY
23	9020-7691	1	TUBE ASSY
24	9002-9915	2	CONNECTOR
25	9103-3069	1	TUBE ASSY
	9020-0481	2	CLAMP
	8820-1033	2	HEX HD CAPSCREW, 3/8-16X3/4, GR5
26	8866-2070	1	ELBOW, 90 DEGREES (includes o-ring)
	8859-1210	1	O-RING
27	9103-3168	1	MAIN CONTROL VALVE (see page 10-7 for details)
28	8820-1067	4	HEX HD CAPSCREW, 1/2-13X1-1/2, GR5
29	8874-3002	1	MALE ADAPTER, 1/4X3/8 TUBE
30	9020-7491	1	HOSE ASSY
31	8866-2064	2	ELBOW, 90 DEGREES (includes o-ring)
	8859-1204	2	O-RING
32	9020-6748	2	DRIVE MOTOR (see page 10-16 for details)
33	8471-7577	2	HOSE ASSY
34	9002-2045	1	HOSE ASSY
35	7713-3167	1	HOSE ASSY
36	7713-3447	1	HOSE ASSY
37	8866-2225	1	SWIVEL NUT BRANCH TEE, 1/4 TUBE
38	8471-7842	1	HOSE ASSY
39	9020-7363	1	TUBE ASSY
40	9020-5793	1	CLAMP ASSY

JJ

** Changed the page number from 9-1A to 9-1*

HYDRAULIC-DRIVE & STEERING CONTROL

Starting Serial No. 8344001L
Thru Serial No. 8444490
Waukesha Engine
Revised 7-16-99

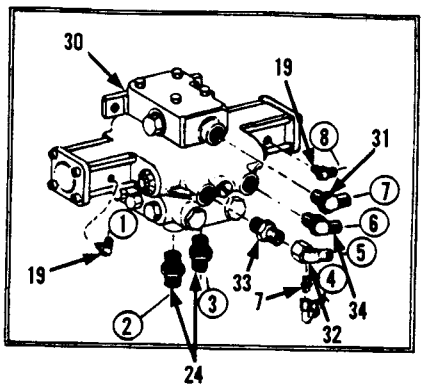

1 - SEE BELOW
2 - SEE BELOW
3 - SEE BELOW
4 - SEE PAGE 9-1
5 - SEE PAGE 9-3
6 - SEE PAGE 9-3
7 - SEE BELOW
8 - SEE BELOW

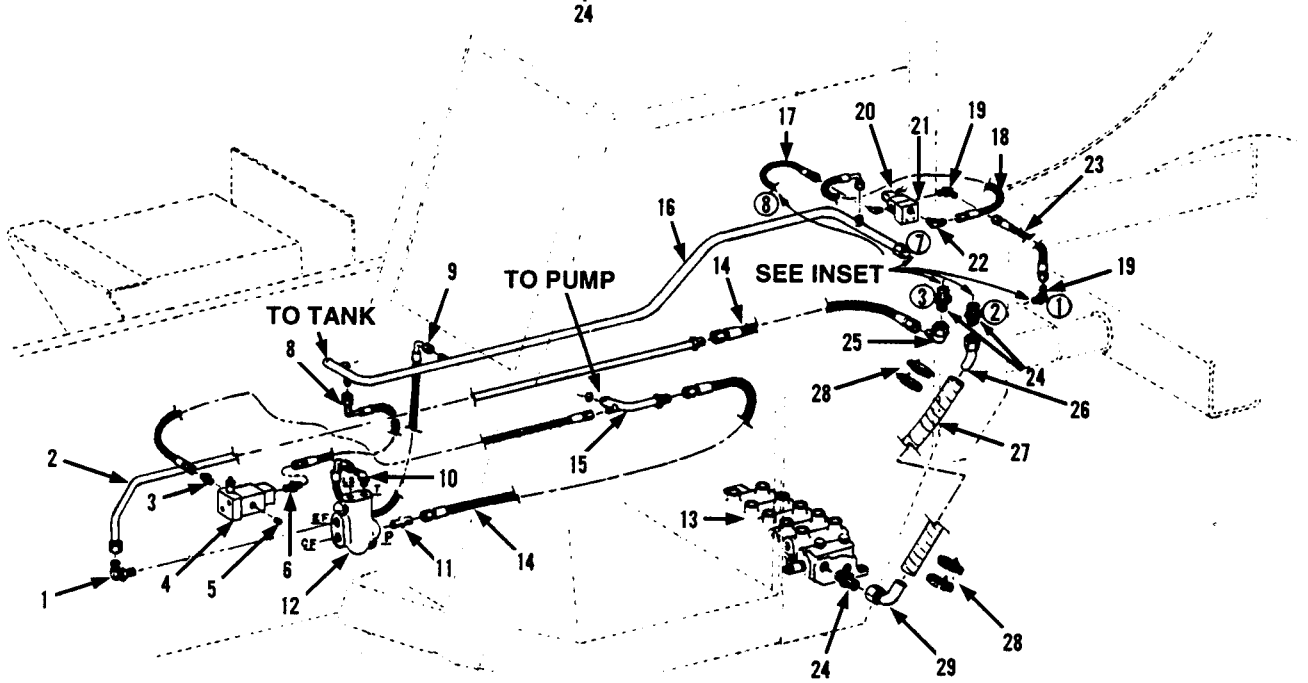

Item	Part No.	Qty.	Description Of Part
1	8866-2069	1	ELBOW - 90 DEGREE (includes o-ring)
	8859-1209	1	O-RING
2	9020-7690	1	TUBE ASSEMBLY
3	8874-3018	1	MALE ADAPTER, 3/8X5/8 TUBE
4	9020-7314	1	DRIVE CIRCUIT RELIEF VALVE
5	8871-1282	1	HEX SOCKET PIPE PLUG, 3/8
6	9002-7360	1	CONNECTOR
7	8874-3002	1	MALE ADAPTER, 1/4X3/8 TUBE
8	9020-7360	1	HIGH PRESSURE HOSE
9	9020-7411	1	HIGH PRESSURE HOSE
10	8366-1316	1	STRAIGHT CONNECTOR
11	8866-2010	1	CONNECTOR (includes o-ring)
	8859-1209	1	O-RING
12	9020-5585	1	LOAD SENSING PRIORITY FLOW CONTROL VALVE
13	9103-3168	1	MAIN HYDRAULIC CONTROL VALVE
14	9002-2045	2	HIGH PRESSURE HOSE
15	9020-7689	1	TUBE ASSEMBLY
16	9020-7363	1	TUBE ASSEMBLY
17	9020-7695	1	HIGH PRESSURE HOSE
18	9020-7697	1	HIGH PRESSURE HOSE
19	8866-2064	3	ELBOW - 90 DEGREE (includes o-ring)
	8859-1204	3	O-RING

Item	Part No.	Qty.	Description Of Part
20	9020-7755	1	CONTROL VALVE
21	9060-2895	1	ADAPTER BLOCK
22	9002-6687	1	ELBOW - 90 DEGREE ADJUSTABLE
23	9020-7696	1	HIGH PRESSURE HOSE
24	8866-2011	3	CONNECTOR (includes o-ring)
	8859-1210	3	O-RING
25	8866-2110	1	ELBOW 90 DEGREE (swivel nut)
26	9020-7299	1	TUBE ASSEMBLY (low pressure hose adapter)
27	9020-7362	1	LOW PRESSURE HOSE
28	9002-8482	4	HOSE CLAMP
29	9020-5783	1	TUBE ASEMBLY (low pressure hose adapter)
30	9020-6737	1	FOWARD - REVERSE VALVE
31	9004-1003	1	ELBOW - 90 DEGREE ADJUSTABLE
32	8866-2069	1	ELBOW - 90 DEGREE (inlcudes o-ring)
	8859-1209	1	O-RING
33	8866-2010	1	CONNECTOR (includes o-ring)
	8859-1209	1	O-RING
34	9020-7567	1	ELBOW - 90 DEGREE SWIVEL

HYDRAULIC-DRIVE & STEERING CONTROL

Starting Serial No. 8444491
thru Serial No. 8744109G
Excluding Serial No. 8744114G
Perkins Engine Only
Original Issue 2-85
Revised 7-16-99

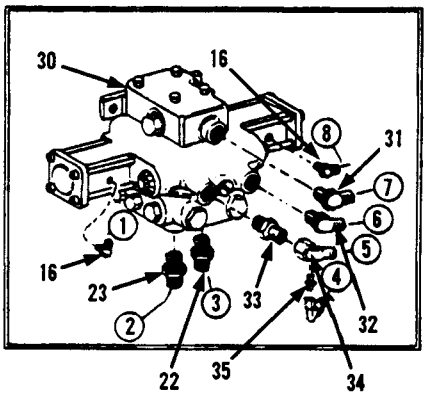

1 - SEE BELOW
2 - SEE BELOW
3 - SEE BELOW
4 - SEE PAGE 9-1A
5 - SEE PAGE 9-3
6 - SEE PAGE 9-3
7 - SEE BELOW
8 - SEE BELOW

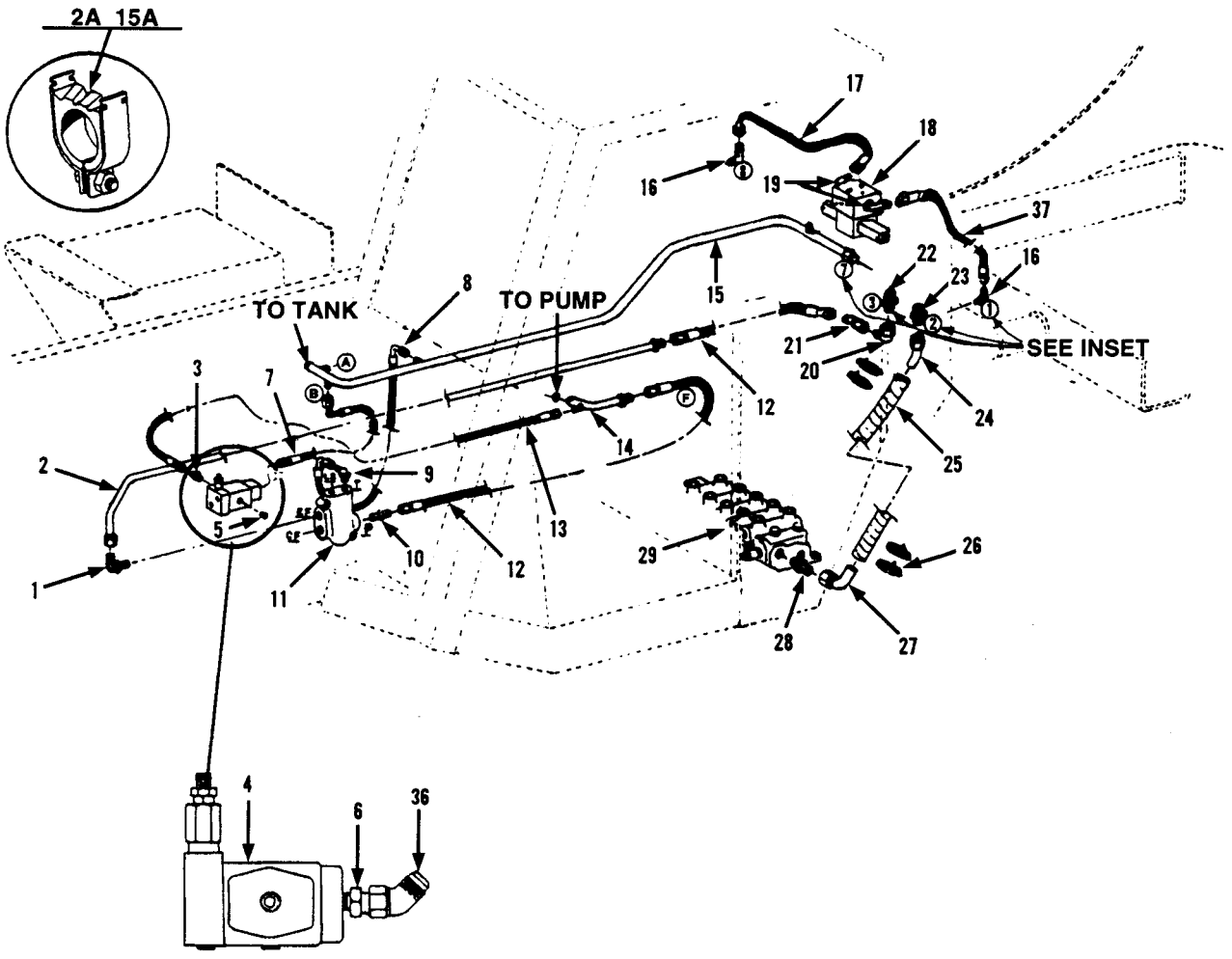

Item	Part No.	Qty.	Description Of Part
1	8866-2069	1	ELBOW - 90 DEGREES (includes o-ring)
	8859-1209	1	O-RING
2	9020-7690	1	TUBE ASSEMBLY
2A	9020-5792	1	CLAMP ASSEMBLY
3	8874-3018	1	MALE ADAPTER, 3/8X5/8 TUBE
4	9020-7314	1	RELIEF VALVE (see page 10-12)
	8820-1020	2	HEX HD CAPSCREW, 5/16-18X1, GR5
5	8871-1282	1	HEX SOCKET PIPE PLUG, 3/8
6	8874-3003	1	MALE ADAPTER, 3/8X1/2 TUBE
7	9020-7360	1	HIGH PRESSURE HOSE
8	9020-7411	1	HIGH PRESSURE HOSE
9	8366-1316	1	STRAIGHT THREAD CONNECTOR
10	8866-2010	1	CONNECTOR (includes o-ring)
	8859-1209	1	O-RING
11	9020-5585	1	PRIORITY FLOW VALVE (see page 10-8)
	8820-1028	2	HEX HD CAPSCREW, 5/16-18X3, GR5
12	9002-2045	2	HIGH PRESSURE HOSE
13	9002-2043	1	HIGH PRESSURE HOSE
14	9020-7689	1	TUBE ASSEMBLY
15	9020-7363	1	TUBE ASSEMBLY
15A	9020-5793	2	CLAMP ASSEMBLY
16	8866-2064	2	ELBOW - 90 DEGREES (includes o-ring)
	8859-1204	2	O-RING
17	9002-7485	1	HIGH PRESSURE HOSE
18	9103-3097	1	DIRECTIONAL CONTROL VALVE
19	8866-2003	2	CONNECTOR (includes o-ring)
	8859-1202	2	O-RING
20	8866-2110	1	ELBOW - 90 DEGREE (swivel nut)
21	8866-2124	1	ELBOW - 45 DEGREE (swivel nut)
22	8866-2028	1	CONNECTOR (includes o-ring)
	8859-1210	1	O-RING
23	8866-2011	1	CONNECTOR (includes o-ring)
	8859-1210	1	O-RING
24	9020-5783	1	TUBE ASSEMBLY
25	9020-7362	1	LOW PRESSURE HOSE
26	9002-8482	4	HOSE CLAMP
27	9020-5783	1	TUBE ASSEMBLY
28	8866-2011	1	CONNECTOR (includes o-ring)
	8859-1210	1	O-RING
29	9103-3168	1	MAIN HYDRAULIC CONTROL VALVE (see page 10-7)
30	9020-6737	1	FOWARD & REVERSE VALVE (see page 10-9)
	8820-1068	2	HEX HD CAPSCREW, GR5
	8820-1070	1	HEX HD CAPSCREW, GR5
	8850-1008	3	HEX NUT
31	9004-1003	1	ELBOW - 90 DEGREE
32	8866-2069	1	ELBOW - 90 DEGREE (includes o-ring)
	8859-1209	1	O-RING
33	8866-2010	1	CONNECTOR (includes o-ring)
	8859-1209	1	O-RING
34	9020-7567	1	ELBOW - 90 DEGREE
35	8874-3002	1	MALE ADAPTER, 1/4X3/8 TUBE
36	8866-2120	1	ELBOW - 45 DEGREE (swivel nut)
37	8471-7464	1	HOSE

HYDRAULIC-DRIVE & STEERING CONTROL

Starting Serial No. 8744115G
Also Machine S/N 8744079G
Original Issue 4-87
Revised 7-16-99

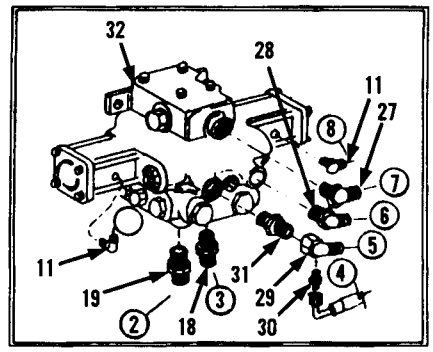

1 - SEE BELOW
2 - SEE BELOW
3 - SEE BELOW
4 - SEE PAGE 9-1A
5 - SEE PAGE 9-3
6 - SEE PAGE 9-3
7 - SEE BELOW
8 - SEE BELOW

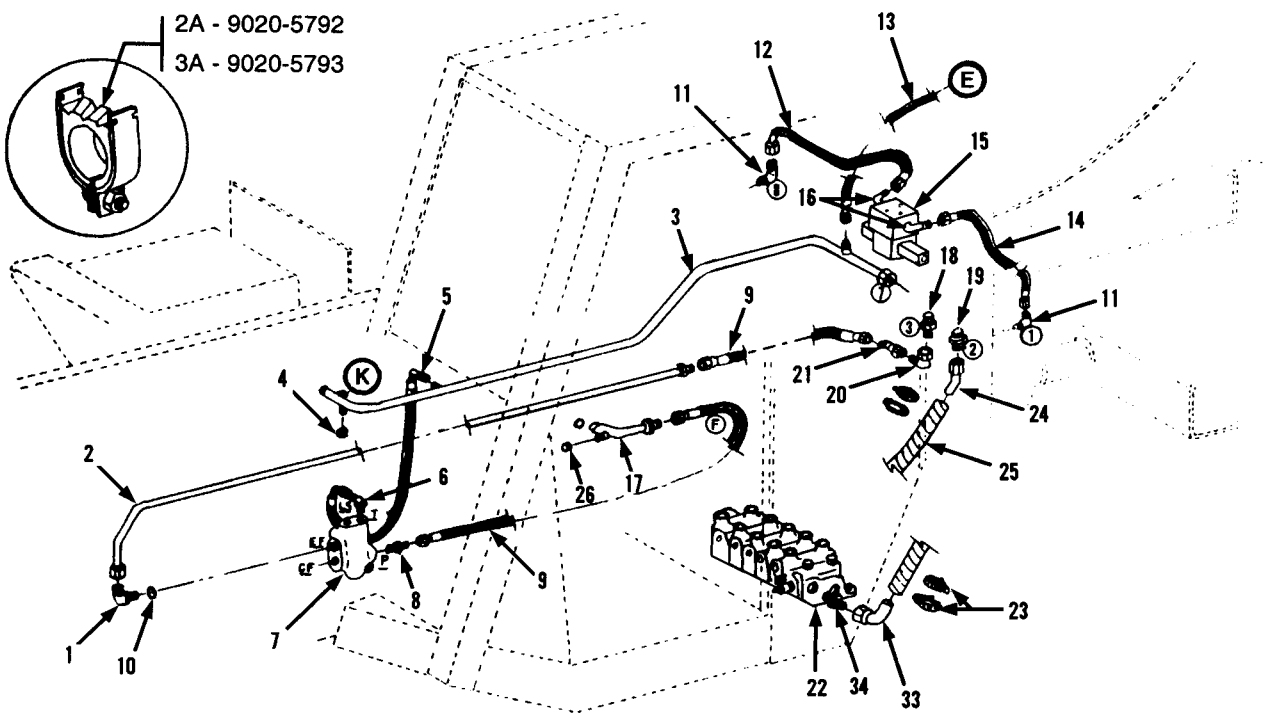

(E) SEE PAGE 9-13
(K) SEE PAGE 9-10A

Item	Part No.	Qty.	Description Of Part
1	8866-2069	1	ELBOW - 90 DEGREES (includes items 10)
2	9020-7690	1	TUBE ASSY
3	9103-3144	1	TUBE ASSY
4	8866-1365	1	HEX CAP, 1/2 TUBE
5	7713-3447	1	HIGH PRESSURE HOSE
6	8366-1316	1	STRAIGHT THREAD CONNECTOR
7	9103-3240	1	PRIORITY FLOW VALVE (see page 10-8 for details)
8	8866-1210	1	CONNECTOR (includes item 10)
9	9002-2045	2	HIGH PRESSURE HOSE
10	8859-1209	AR	O-RING
11	8866-2064	2	ELBOW - 90 DEGREES (includes
	8859-1204	1	o-ring)
12	9002-7485	1	HIGH PRESSURE HOSE
13	7713-3167	1	HOSE ASSY
14	8471-7464	1	HOSE ASSY
15	9103-3097	1	DIRECTIONAL CONTROL VALVE
16	8866-2003	2	CONNECTOR (includes o-ring)
	8859-1202	2	O-RING
17	9020-7689	1	TUBE ASSY
18	8866-2028	1	CONNECTOR (includes o-ring)
	8859-1210	1	O-RING
19	8866-2011	1	CONNECTOR (includes o-ring)
	8859-1210	1	O-RING
20	8866-2110	1	ELBOW - 90 DEGREES (swivel nut)
21	8866-2124	1	ELBOW - 45 DEGREES (swivel nut)
22	9103-3168	1	MAIN HYDRAULIC CONTROL VALVE (see page 10-7)
23	9002-8482	4	HOSE CLAMP
24	9020-5783	1	TUBE ASSY
25	9020-7362	1	LOW PRESSURE HOSE
26	8866-1366	1	HEX CAP, 5/8 TUBE
27	9004-1003	1	ELBOW - 90 DEGREES
28	8866-2069	1	ELBOW - 90 DEGREES (includes item 10)
29	9020-7567	1	ELBOW - 90 DEGREES
30	8874-3002	1	MALE ADAPTER, 1/4X3/8 TUBE
31	8866-2010	1	CONNECTOR (includes item 10)
32	9020-6737	1	FORWARD/REVERSE VALVE (see page 10-9)
33	9020-5783	1	TUBE ASSY
34	8866-2011	1	CONNECTOR (includes o-ring)
	8859-1210	1	O-RING

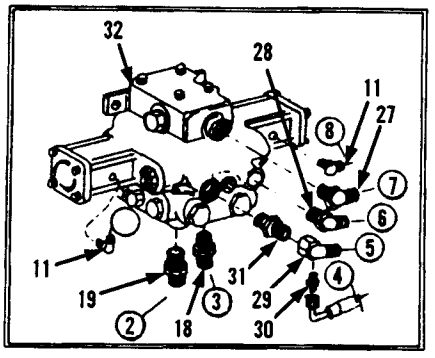

1 - SEE BELOW
2 - SEE BELOW
3 - SEE BELOW
4 - SEE PAGE 9-1A
5 - SEE PAGE 9-3
6 - SEE PAGE 9-3
7 - SEE BELOW
8 - SEE BELOW

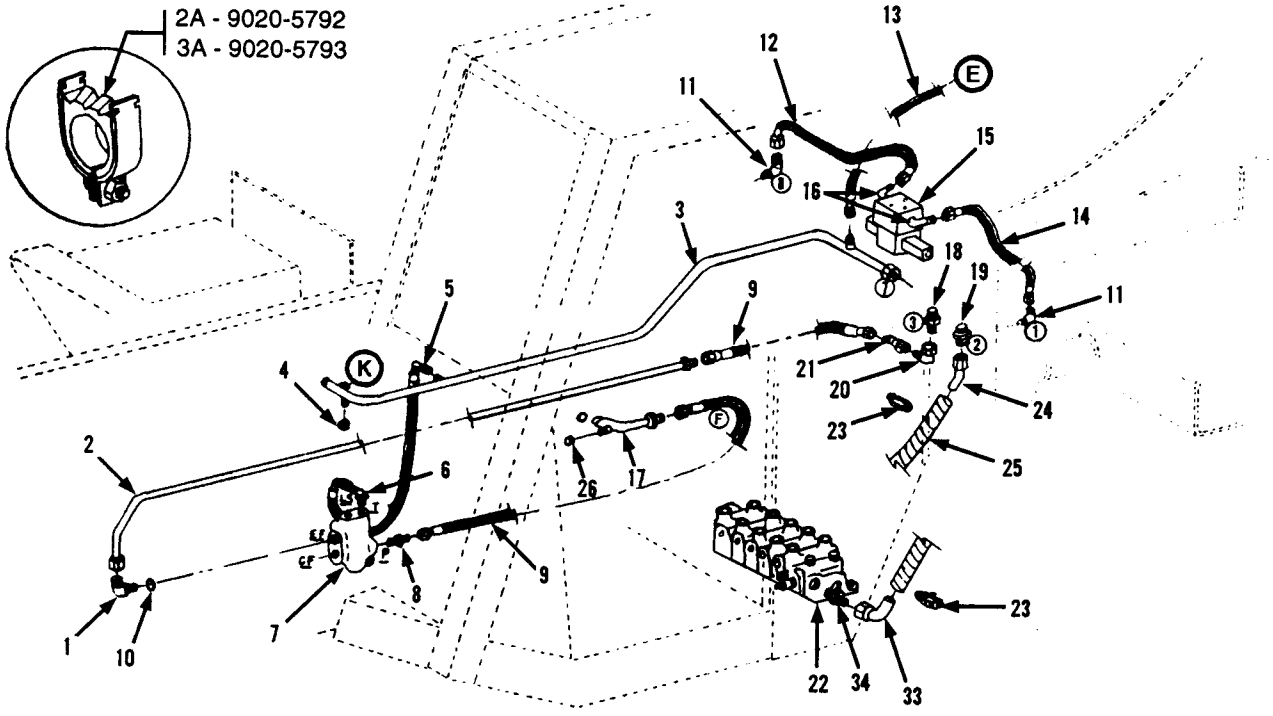

E - SEE PAGE 9-13
K - SEE PAGE 9-10A

Item	Part No.	Qty.	Description Of Part
1	8866-2069	1	ELBOW - 90 DEGREES (includes items 10)
2	9020-7690	1	TUBE ASSY
3	9103-3144	1	TUBE ASSY
4	8866-1365	1	HEX CAP, 1/2 TUBE
5	7713-3447	1	HIGH PRESSURE HOSE
6	8366-1316	1	STRAIGHT THREAD CONNECTOR
7	9103-3240	1	PRIORITY FLOW VALVE (see page 10-8 for details)
8	8866-1210	1	CONNECTOR (includes item 10)
9	9002-2045	2	HIGH PRESSURE HOSE
10	8859-1209	AR	O-RING
11	8866-2064	2	ELBOW - 90 DEGREES (includes
	8859-1204	1	o-ring)
12	9002-7485	1	HIGH PRESSURE HOSE
13	7713-3167	1	HOSE ASSY
14	8471-7464	1	HOSE ASSY
15	9103-3097	1	DIRECTIONAL CONTROL VALVE
16	8866-2003	2	CONNECTOR (includes o-ring)
	8859-1202	2	O-RING
17	9020-7689	1	TUBE ASSY
18	8866-2028	1	CONNECTOR (includes o-ring)
	8859-1210	1	O-RING
19	8866-2011	1	CONNECTOR (includes o-ring)
	8859-1210	1	O-RING
20	8866-2110	1	ELBOW - 90 DEGREES (swivel nut)
21	8866-2124	1	ELBOW - 45 DEGREES (swivel nut)
22	9103-3168	1	MAIN HYDRAULIC CONTROL VALVE (see page 10-7)
23	9002-8482	4	HOSE CLAMP
24	9020-5783	1	TUBE ASSY
25	9104-3153	1	LOW PRESSURE HOSE
26	8866-1366	1	HEX CAP, 5/8 TUBE
27	9004-1003	1	ELBOW - 90 DEGREES
28	8866-2069	1	ELBOW - 90 DEGREES (includes item 10)
29	9020-7567	1	ELBOW - 90 DEGREES
30	8874-3002	1	MALE ADAPTER, 1/4X3/8 TUBE
31	8866-2010	1	CONNECTOR (includes item 10)
32	9020-6737	1	FORWARD/REVERSE VALVE (see page 10-9)
33	9020-5783	1	TUBE ASSY
34	8866-2011	1	CONNECTOR (includes o-ring)
	8859-1210	1	O-RING

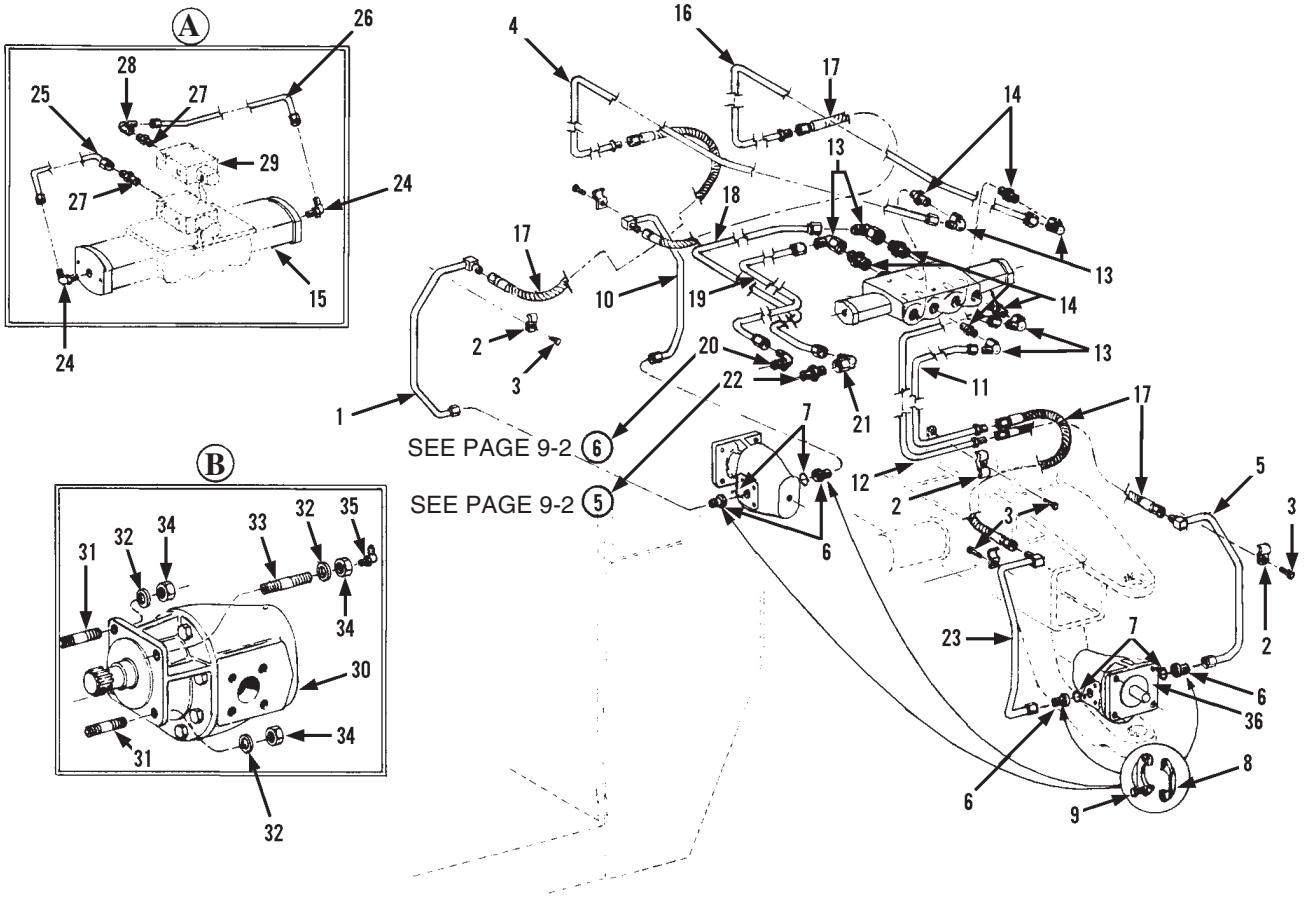

Item	Part No.	Qty.	Description Of Part
1	9020-7295	1	TUBE ASSY
	9104-3113	1	TUBE ASSY (starting S/N 8644031G)
2	9020-2343	5	TUBE CLAMP
3	8820-1036	5	HEX HD CAPSCREW, 3/8-16X1-1/4 GR5
	8850-1006	5	HEX NUT, 3/8-16
4	9020-7371	1	TUBE ASSY
	9104-3168	1	TUBE ASSY (starting S/N 8744115G)
5	9020-7297	1	TUBE ASSY
	9104-3115	1	TUBE ASSY (starting S/N 8644031G)
* 6	9020-7372	4	ADAPTER
7	9002-8225	4	O-RING
8	8471-1342	8	FLANGE HALF
9	8820-1067	16	HEX HD CAPSCREW, 1/2-13X1-1/2 GR5
10	9020-7296	1	TUBE ASSY
	9104-3116	1	TUBE ASSY (starting S/N 8644031G)
11	9020-7376	1	TUBE ASSY
12	9020-7375	1	TUBE ASSY
13	8362-1122	6	ELBOW - 90 DEGREES (swivel nut)
14	8866-2028	6	CONNECTOR (includes o-ring)
	8859-1210	6	O-RING
15	9020-6738	1	SERIES PARALLEL VALVE (see page 10-10 for details)
16	9020-7373	1	TUBE ASSY
17	9020-7290	4	HIGH PRESSURE HOSE (armored)

Item	Part No.	Qty.	Description Of Part
18	9020-7377	1	TUBE ASSY
19	9020-7370	1	TUBE ASSY
20	8866-2069	1	ELBOW - 90 DEGREES (includes o-ring)
	8859-1209	1	O-RING
21	9020-7567	1	ELBOW - 90 DEGREES (swivel)
22	8866-2010	1	CONNECTOR (includes o-ring)
	8859-1209	1	O-RING
23	9020-7298	1	TUBE ASSY
	9104-3114	1	TUBE ASSY (starting S/N 8644031G)
24	8866-2064	2	ELBOW - 90 DEGREES (includes o-ring)
	8859-1204		
25	9020-7667	1	TUBE ASSY
26	9020-7665	1	TUBE ASSY
27	8866-1009	2	CONNECTOR (includes o-ring)
28	9002-9930	1	ELBOW - 90 DEGREES (swivel)
29	9020-6739	2	SOLENOID VALVE (see page 10-11 for details)
30	9020-6748	2	DRIVE MOTOR (see page 10-16 for details)
31	9020-2327	3	MOTOR MOUNT STUD
32	9020-3506	4	WASHER
33	9020-6750	1	HOLLOW STUD
34	8850-1008	4	HEX NUT, 1/2-13
35	8867-1027	1	LUBE FITING - 45 DEGREES 1/4-28
36	8568-1076	2	GASKET (drive motor to hub)

** Revised part number & description on item 6.*

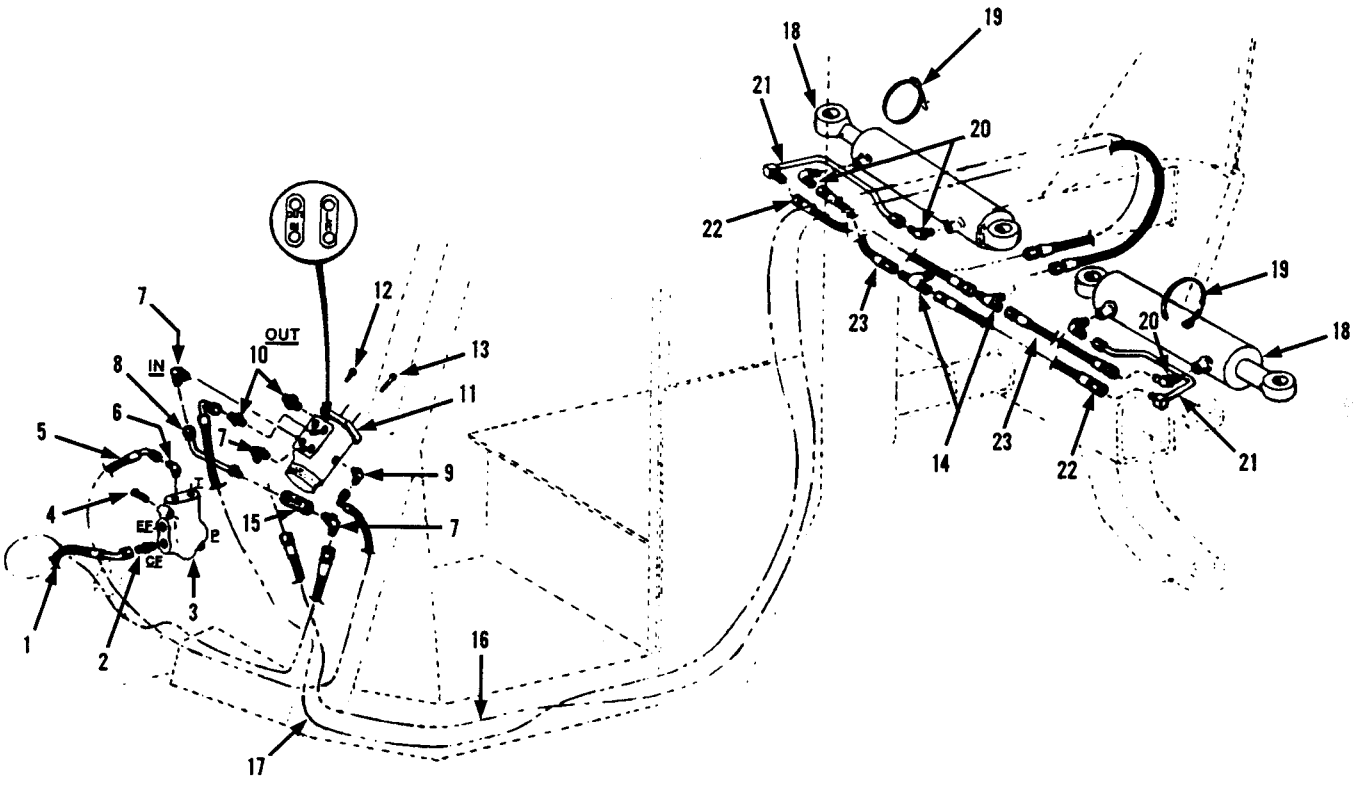

Item	Part No.	Qty.	Description Of Part
1	9020-7410	1	HIGH PRESSURE HOSE
2	8866-2007	1	CONNECTOR (includes o-ring)
	8859-1206	1	O-RING
3	9020-5585	1	LOAD SENSING PRIORITY FLOW CONTROL VALVE
4	8820-1028	2	HEX HD ACPSCREW, 5/16-18X3 GR5
5	9020-5799	1	HIGH PRESSURE HOSE
6	8366-1316	1	CONNECTOR
7	8866-2065	3	ELBOW - 90 DEGREES (includes o-ring)
	8859-1205	3	O-RING
8	9020-6003	1	TUBE ASSY
9	9002-8499	1	ELBOW - 90 DEGREES STRAIGHT
10	8866-2006	2	CONNECTOR (includes o-ring)
	8859-1205	2	O-RING
11	9020-6762	1	STEERING ORBITOL
12	8820-1033	2	HEX HD CAPSCREW, 3/8-16X3/4 GR5 STEERING COLUMN TO ORBITOL

Item	Part No.	Qty.	Description Of Part
13	8820-1037	2	HEX HD ACPSCREW, 3/8-16X1-1/2 GR5 ORBITOL TO INSTRUMENT PANEL
14	9002-7913	2	STRAIGHT TEE
15	9020-2926	1	CHECK VALVE
16	9020-7369	1	HIGH PRESSURE HOSE
17	9020-7368	1	HIGH PRESSURE HOSE
18	9080-1313	2	STEERING CYLINDER
19	9002-7713	2	CLAMP
20	7713-1088	4	ELBOW - 90 DEGREES ADJUSTABLE
21	9060-1364	2	TUBE ASSY
22	9020-7301	2	HIGH PRESSURE HOSE
23	9020-5121	2	HIGH PRESSURE HOSE

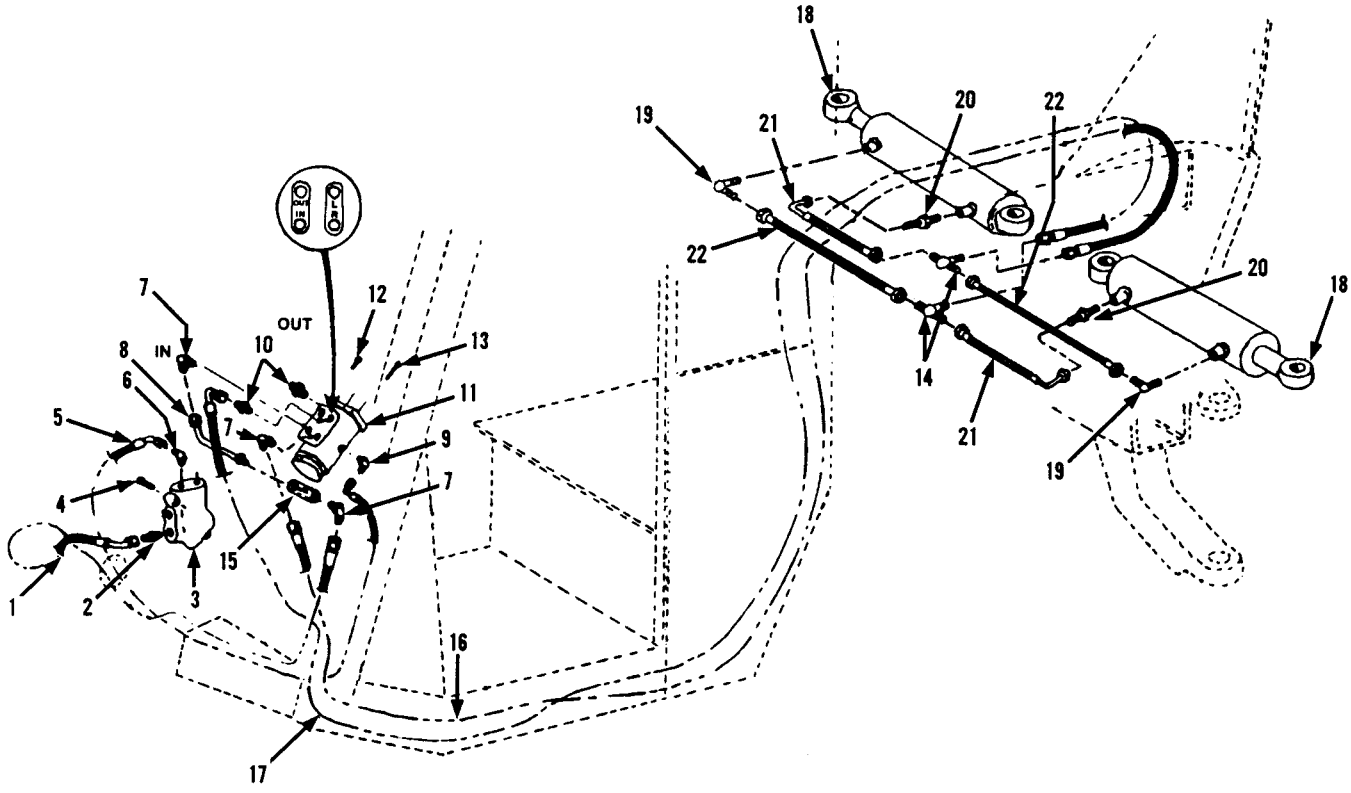

Item	Part No.	Qty.	Description Of Part
1	8471-7550	1	HOSE ASSY
2	8866-2007	1	CONNECTOR (includes o-ring)
	8859-1206	1	O-RING
3	9103-3240	1	PRIORITY FLOW CONTROL VALVE (see page 10-8 for details)
4	8820-1028	2	HEX HD CAPSCREW, 5/16-18X3, GR5
5	8471-7547	1	HOSE ASSY
6	8366-1316	1	CONNECTOR
7	8866-2065	3	ELBOW - 90 DEGREES (includes o-ring)
	8859-1205	3	O-RING
8	9020-6003	1	TUBE ASSY
9	9002-8499	2	ELBOW - 90 DEGREES
10	8866-2006	2	CONNECTOR (includes o-ring)
11	9020-6762	1	STEERING ORBITROL
12	8820-1033	2	HEX HD CAPSCREW, 3/8-16X3/4 GR5 (column to orbitrol)

Item	Part No.	Qty.	Description Of Part
13	8820-1037	2	HEX HD CAPSCREW, 3/8-16X1-1/2 GR5 (orbitrol to instrument panel)
14	8866-1306	2	UNION TEE, 1/2 TUBE
15	9020-2926	1	CHECK VALVE
16	8471-7549	1	HOSE ASSY
17	8471-7548	1	HOSE ASSY
18	9080-1313	2	STEERING CYLINDER (see page 10-6 for details)
19	8866-2064	2	ELBOW - 90 DEGREES (includes o-ring)
	8859-1204	2	O-RING
20	8866-2005	2	CONNECTOR (includes o-ring)
	8859-1204	2	O-RING
21	8471-7546	2	HOSE ASSY
22	8471-7525	2	HOSE ASSY

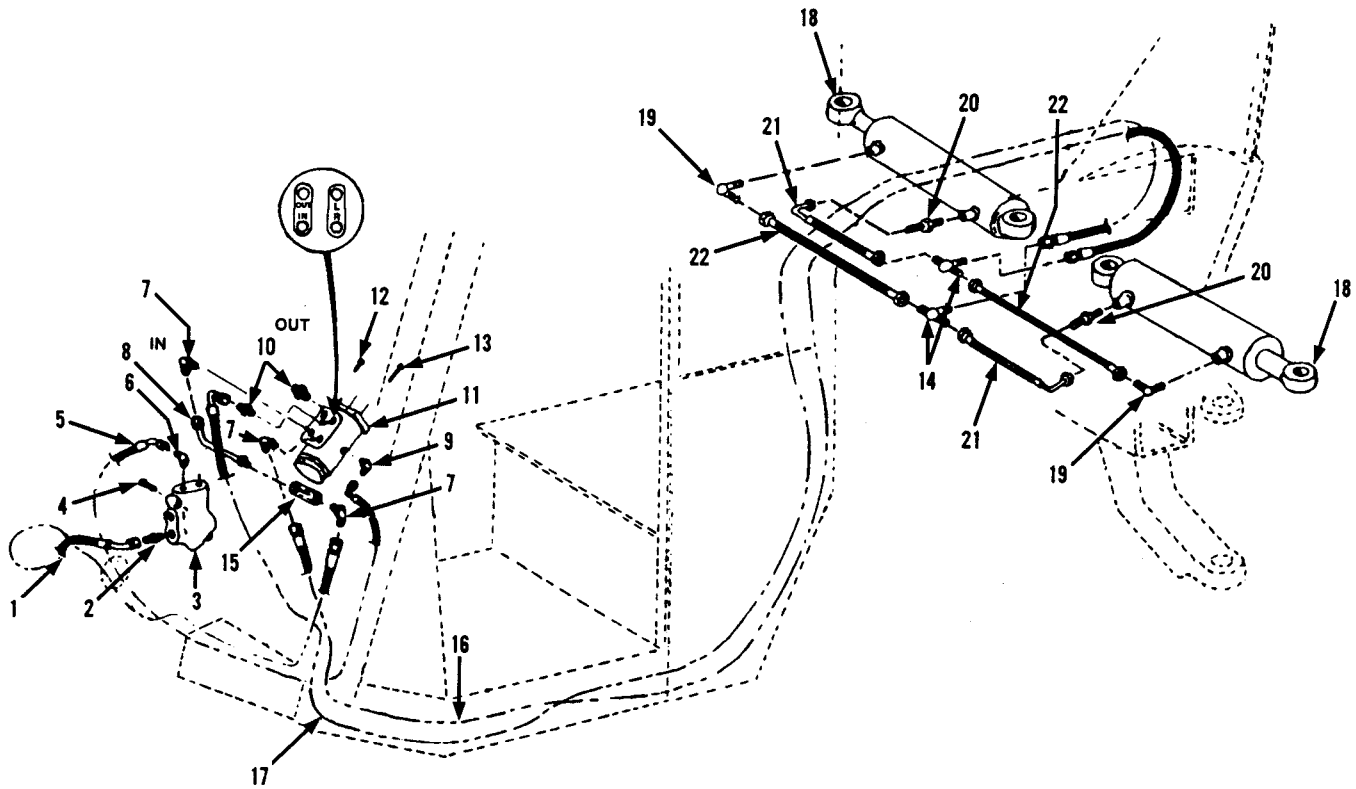

Item	Part No.	Qty.	Description Of Part
1	8471-7550	1	HOSE ASSY
2	8866-2007	1	CONNECTOR (includes o-ring)
	8859-1206	1	O-RING
3	9103-3240	1	PRIORITY FLOW CONTROL VALVE (see page 10-8 for details)
4	8820-1028	2	HEX HD CAPSCREW, 5/16-18X3, GR5
5	8471-7547	1	HOSE ASSY
6	8366-1316	1	CONNECTOR
7	8866-2065	3	ELBOW - 90 DEGREES (includes o-ring)
	8859-1205	3	O-RING
8	9020-6003	1	TUBE ASSY
9	9002-8499	2	ELBOW - 90 DEGREES
10	8866-2006	2	CONNECTOR (includes o-ring)
11	9020-6762	1	STEERING ORBITROL
12	8820-1033	2	HEX HD CAPSCREW, 3/8-16X3/4 GR5 (column to orbitrol)

Item	Part No.	Qty.	Description Of Part
13	8820-1037	2	HEX HD CAPSCREW, 3/8-16X1-1/2 GR5 (orbitrol to instrument panel)
14	9002-7913	2	STRAIGHT TEE
15	9020-2926	1	CHECK VALVE
16	8471-7882	1	HIGH PRESSURE HOSE
17	8471-7548	1	HIGH PRESSURE HOSE
18	9080-1313	2	STEERING CYLINDER (see page 10-6 for details)
19	7713-1088	2	ELBOW - 90 DEGREES ADJUSTABLE
20	8866-2035	2	CONNECTOR (includes o-ring)
	8859-1204	2	O-RING
21	8471-7546	1	HIGH PRESSURE HOSE
22	8471-7553	1	HIGH PRESSURE HOSE

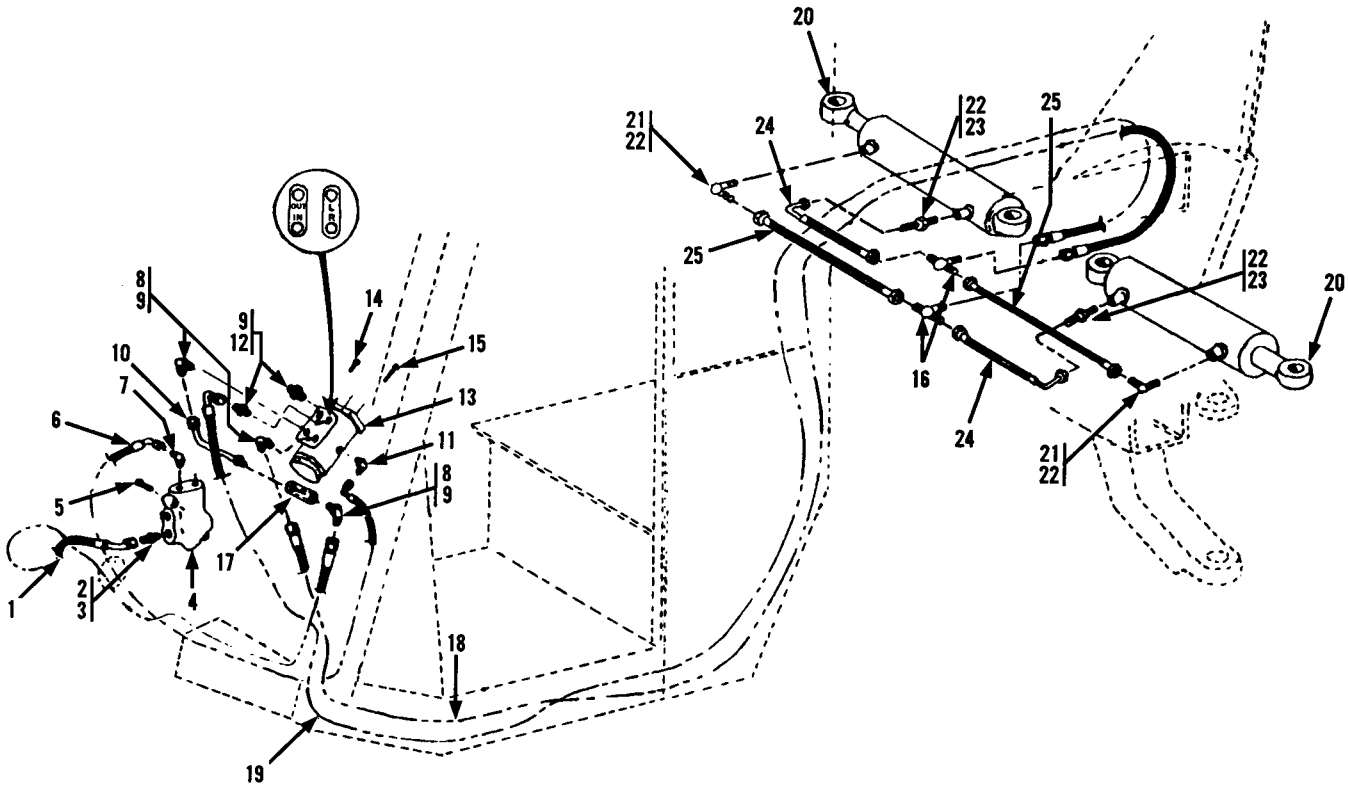

Item	Part No.	Qty.	Description Of Part
1	8471-7550	1	HOSE ASSY
2	8866-2007	1	CONNECTOR, (includes item 3)
3	8859-1206	1	O-RING
4		Ref	LOAD SENSING FLOW CONTROL VALVE, (see page 10-8 for details)
5	8820-1028	2	HEX HD CAPSCREW, 5/16-18X3, GR5
6	8471-7547	1	HOSE ASSY
7	8366-1316	1	CONNECTOR
8	8866-2065	3	ELBOW, 90 DEGREES, (includes item 9)
9	8859-1205	5	O-RING
10	9020-6003	1	TUBE ASSY
11	9002-8499	2	ELBOW, 90 DEGREES, (straight)
12	8866-2006	2	CONNECTOR, (includes item 9)
13	9020-6762	1	STEERING ORBITROL
14	8820-1033	2	HEX HD CAPSCREW, 3/8-16X3/4, GR5, (column to orbitrol)

Item	Part No.	Qty.	Description Of Part
15	8820-1037	2	HEX HD CAPSCREW, 3/8-16X1-1/2, GR5, (orbitrol to instrument panel)
16	8866-1306	2	UNION TEE, 1/2 TUBE
17	9020-2926	1	CHECK VALVE
18	8471-7882	1	HOSE ASSY
19	8471-7548	1	HOSE ASSY
20		Ref	STEERING CYLINDER, (see page 10-6 for details)
21	8866-2064	2	ELBOW, 90 DEGREES, (includes item 22)
22	8859-1204	4	O-RING
23	8866-2005	2	CONNECTOR, (includes item 22)
24	8471-7546	1	HOSE ASSY
25	8471-7525	1	HOSE ASSY

HYDRAULICS-BOOM LIFT

Starting Serial No. 8344001L
Thru Serial No. 8444490
Waukesha Engine Only
Revised 7-16-99

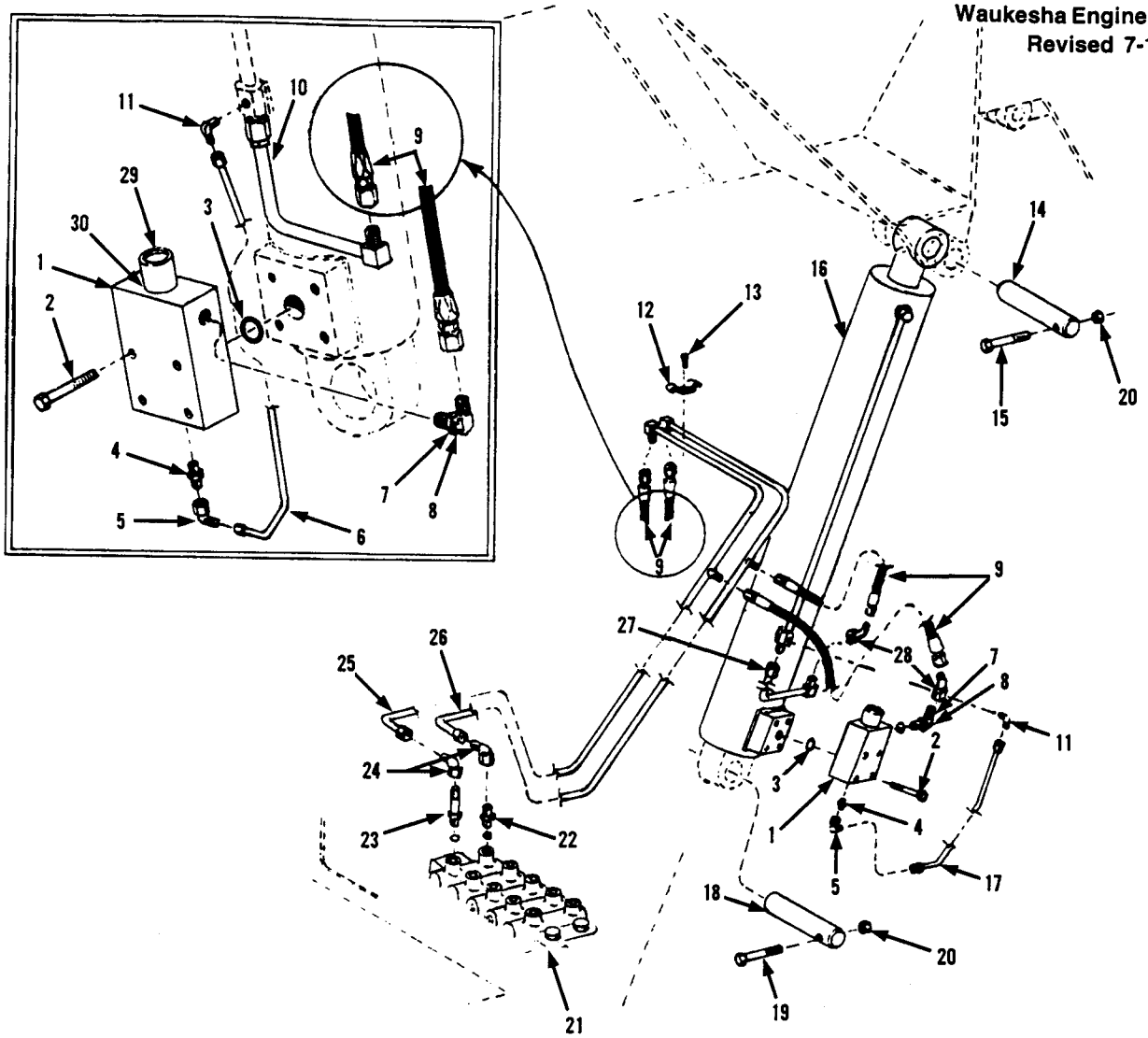

Item	Part No.	Qty.	Description Of Part
1	9020-5237	2	COUNTERBALANCE VALVE
	9103-4030	AR	SEAL KIT
2	8820-1071	8	HEX HD CAPSCREW, 1/2-13X2-1/2 GR5
3	8859-1102	2	O-RING (valve to cylinder)
4	8866-2017	2	CONNECTOR (includes o-ring)
	8859-1204	2	O-RING
5	8866-2103	2	ELBOW - 90 DEGREES (swivel nut)
6	9020-7380	1	TUBE ASSY
7	9020-7379	2	ELBOW - 90 DEGREES ADJUSTABLE
8	9020-8215	2	ORIFICE ELBOW
9	9002-2043	4	HIGH PRESSURE HOSE
10	9020-7381	1	TUBE ASSY
11	8874-3041	2	MALE ELBOW - 90 DEGREES 1/8X1/4 TUBE
12	9020-0483	1	TUBE CLAMP
13	8820-1035	1	HEX HD CAPSCREW, 3/8-16X1, GR5
14	9020-6892	2	PIN (lift cyl rod end)
15	8820-1105	2	HEX HD CAPSCREW, 5/8-11X4, GR5
16		2	LIFT CYLINDER (see page 10-1 for details)

Item	Part No.	Qty.	Description Of Part
17	9020-7383	1	TUBE ASSY
18	9040-2875	2	PIN (lift cyl base end)
19	8820-1104	2	HEX HD CAPSCREW, 5/8-11X3-3/4 GR5
20	8850-1010	4	HEX NUT 5/8-11
21		1	MAIN HYDRAULIC CONTROL VALVE (see page 10-7 for details)
22	8866-2025	1	CONNECTOR (includes o-ring)
	8859-1209	1	O-RING
23	8866-2038	1	CONNECTOR (includes o-ring)
	8859-1207	1	O-RING
24	8866-2108	2	ELBOW - 90 DEGREES (swivel nut)
25	9020-7378	1	TUBE ASSY
26	9020-7382	1	TUBE ASSY
27	9020-7381	1	TUBE ASSY
28	8866-2121	2	ELBOW - 45 DEGREES (swivel nut)
29	9020-5773	2	CARTRIDGE
30	8859-1210	2	O-RING (cartridge to valve)

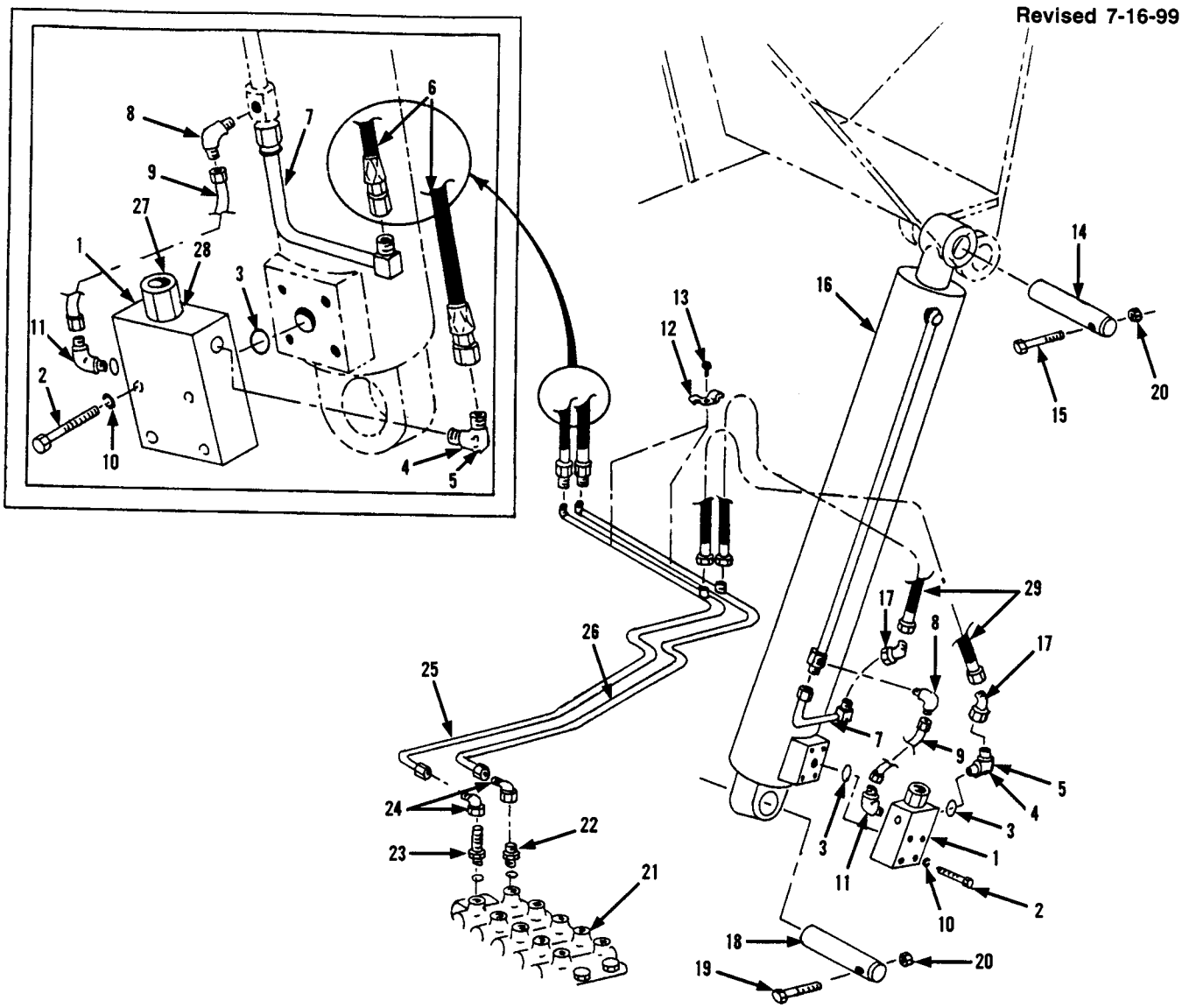

Item	Part No.	Qty.	Description Of Part
1	9104-3232	2	COUNTERBALANCE VALVE (see page 10-26 for details)
2	8820-1071	8	HEX HD CAPSCREW, 1/2-13X2-1/2 GR5
3	8859-1102	2	O-RING
4	9020-7379	2	ELBOW -90 DEGREES ADJUSTABLE
5	9020-8215	2	ORIFICE ELBOW
6	8471-6448	2	HOSE ASSY
7	9020-7381	1	TUBE ASSY
8	8874-3041	2	MALE ELBOW - 90 DEGREES, 1/8X1/4 TUBE
9	9104-3069	2	TUBE ASSY
10	8855-1013	8	LOCKWASHER 1/2
11	8874-3041	2	MALE ELBOW - 90 DEGREES, 1/8X1/4 TUBE
12	9020-0483	2	TUBE CLAMP
13	8820-1035	2	HEX HD CAPSCREW, 3/8-16X1 GR5
14	9020-6892	2	PIN (lift cyl rod end)
15	8820-1105	2	HEX HD CAPSCREW, 5/8-11X4 GR5
16	9103-3286	2	LIFT CYLINDER (see page 10-7)

Item	Part No.	Qty.	Description Of Part
17	8866-2121	2	ELBOW - 45 DEGREES (swivel nut)
18	9020-2875	2	PIN (lift cyl base end)
19	8820-1105	2	HEX HD CAPSCREW, 5/8-11X4, GR5
20	8850-1010	4	HEX NUT, 5/8-11
21	9103-3168	1	MAIN HYDRAULIC CONTROL VALVE (see page 10-1 for details)
22	8866-2025	1	CONNECTOR (includes o-ring)
	8859-1209	1	O-RING
23	8866-2038	1	CONNECTOR (includes o-ring)
	8859-1207	1	O-RING
24	8866-2121	2	ELBOW - 45 DEGREES (swivel nut)
25	9103-3124	1	TUBE ASSY
26	9103-3123	1	TUBE ASSY
27	9104-3245	2	CARTRIDGE
28	8859-1210	2	O-RING (cartridge to valve
29	8471-6015	2	HOSE ASSY

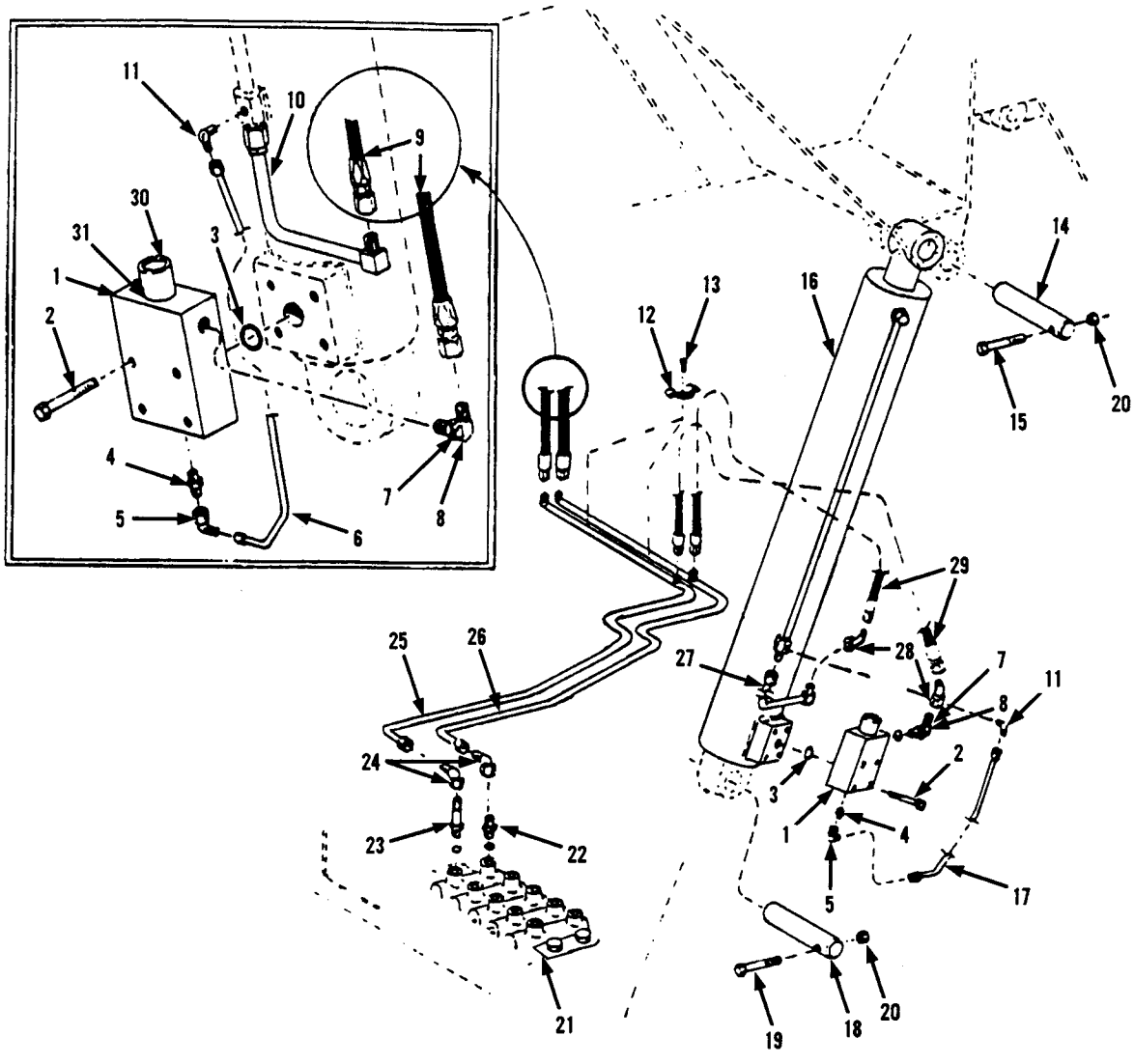

Item	Part No.	Qty.	Description Of Part
1	9020-5237	2	COUNTERBALANCE VALVE
	9103-4030	AR	SEAL
2	8820-1071	8	HEX HD CAPSCREW, 1/2-13X2-1/2 GR5
3	8859-1102	2	O-RING
4	8866-2017	2	CONNECTOR (includes o-ring)
	8859-1204	2	O-RING
5	8866-2103	2	ELBOW - 90 DEGREES (swivel nut)
6	9020-7380	1	TUBE ASSY
7	9020-7379	2	ELBOW - 90 DEGREE ADJUSTABLE
8	9020-8215	2	ORIFICE ELBOW
9	8471-6448	2	HOSE ASSY
10	9020-7381	1	TUBE ASSY
11	8874-3041	2	MALE ELBOW - 90 DEGREES 1/8X1/4 TUBE
12	9020-0483	2	TUBE CLAMP
13	8820-1035	2	HEX HD CAPSCREW, 3/8-16X1 GR5
	8850-1006	2	HEX NUT, 3/8-16
14	9020-6892	2	PIN (rod end)
15	8820-1105	2	HEX HD CAPSCREW, 5/8-11X4 GR5

Item	Part No.	Qty.	Description Of Part
16	9080-1333	Ref	LIFT CYLINDER (see page 10-1)
17	9020-7383	1	TUBE ASSY
18	9040-2875	2	PIN (base end)
19	8820-1104	2	HEX HD CAPSCREW, 5/8-11X3-3/4 GR5
20	8850-1010	4	HEX NUT, 5/8-11
21	9103-3168	Ref	MAIN HYDRAULIC CONTROL VALVE (see page 10-7 for details)
22	8866-2025	1	CONNECTOR (includes o-ring)
	8859-1209	1	O-RING
23	8866-2038	1	CONNECTOR (includes o-ring)
	8859-1207	1	O-RING
24	8866-2108	2	ELBOW - 90 DEGREES (swivel nut)
25	9104-3096	1	TUBE ASSY
26	9104-3095	1	TUBE ASSY
27	9020-7381	1	TUBE ASSY
28	8866-2121	2	ELBOW - 45 DEGREES (swivel nut)
29	8471-7799	2	HOSE ASSY
30	9020-5773	2	CARTRIDGE
31	8859-1210	2	O-RING (cartridge to valve)

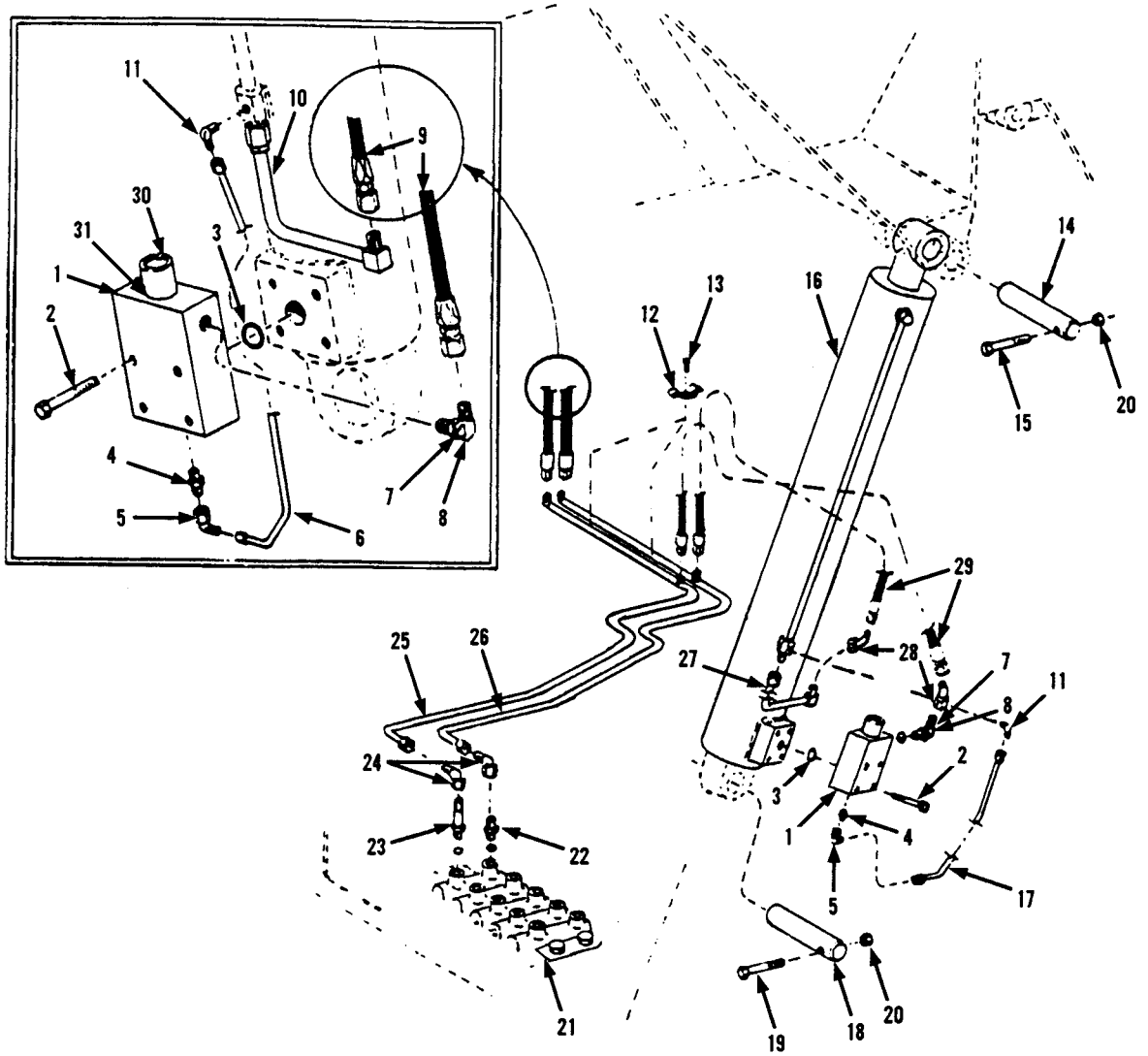

Item	Part No.	Qty.	Description Of Part
1	9020-5237	2	COUNTERBALANCE VALVE
	9103-4030	AR	SEAL KIT
2	8820-1071	8	HEX HD CAPSCREW, 1/2-13x2-1/2 GR5
3	8859-1102	2	O-RING
4	8866-2017	2	CONNECTOR (includes o-ring)
	8859-1204	2	O-RING
5	8866-2103	2	ELBOW - 90 DEGREES (swivel nut)
6	9020-7380	1	TUBE ASSY
7	9020-7379	2	ELBOW - 90 DEGREE ADJUSTABLE
8	9020-8215	2	ORIFICE ELBOW
9	8471-6448	2	HOSE ASSY
10	9020-7381	1	TUBE ASSY
11	8874-3041	2	MALE ELBOW - 90 DEGREES 1/8X1/4 TUBE
12	9020-0483	2	TUBE CLAMP
13	8820-1035	2	HEX HD CAPSCREW, 3/8-16X1 GR5
	8850-1006	2	HEX NUT, 3/8-16
14	9020-6892	2	PIN (lift cyl rod end)
15	8820-1105	2	HEX HD CAPSCREW, 5/8-11X4 GR5
16		2	LIFT CYLINDER (see page 10-1)

Item	Part No.	Qty.	Description Of Part
17	9020-7383	1	TUBE ASSY
18	9040-2875	2	PIN (lift cyl base end)
19	8820-1104	2	HEX HD CAPSCREW, 5/8-11X3-3/4 GR5
20	8850-1010	4	HEX NUT, 5/8-11
21		1	MAIN HYDRAULIC CONTROL VALVE (see page 10-7 for details)
22	8866-2025	1	CONNECTOR (includes o-ring)
	8859-1209	1	O-RING
23	8866-2038	1	CONNECTOR (includes o-ring)
	8859-1207	1	O-RING
24	8866-2108	2	ELBOW - 90 DEGREES (swivel nut)
25	9103-3124	1	TUBE ASSY
26	9103-3123	1	TUBE ASSY
27	9020-7381	1	TUBE ASSY
28	8866-2121	2	ELBOW - 45 DEGREES (swivel nut)
29	8471-6015	2	HOSE ASSY
30	9020-5773	2	CARTRIDGE
31	8859-1210	2	O-RING (cartridge to valve)

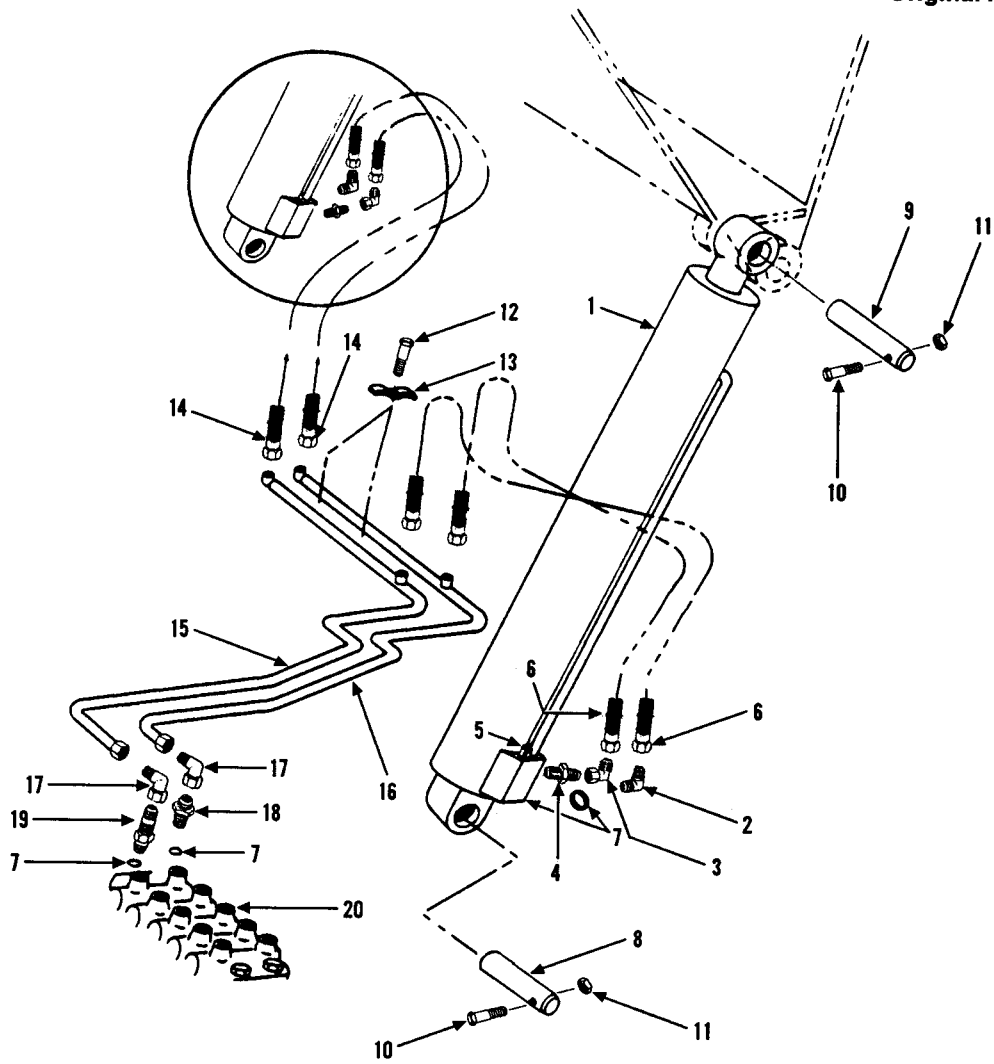

Item	Part No.	Qty.	Description Of Part
1		Ref	LIFT CYLINDER ASSY, (see page 10-1 for details)
2	8682-1248	2	ELBOW, 90 DEGREES, (includes item 7)
3	8866-2107	2	ELBOW, 90 DEGREES, (swivel nut)
4	8866-2022	2	CONNECTOR, (includes item 7)
5	9103-4308	1	COUNTERBALANCE VALVE
6	8471-7799	2	HOSE ASSY
7	8859-1207	6	O-RING
8	9040-2875	1	PIN
9	9020-6892	1	PIN
10	8320-1044	4	HEX HD CAPSCREW, 5/8-11X4, GR8
11	8850-1010	4	HEX NUT, 5/8-11
12	8820-1035	4	HEX HD CAPSCREW, 3/8-16X1, GR5
13	9020-0483	2	TUBE CLAMP
14	8471-6448	2	HOSE ASSY
15	9104-3096	1	TUBE ASSY
16	9104-3095	1	TUBE ASSY
17	8866-2108	2	ELBOW, 90 DEGREES, (swivel nut)
18	8866-2008	1	CONNECTOR, (includes item 7)
19	8866-2038	1	CONNECTOR, (includes item 7)
20		Ref	MAIN CONTROL VALVE ASSY, (see page 10-7 for details)

HYDRAULICS-CROWD

Starting Serial No. 8344001L
Thru Serial No. 8444317
Revised 7-16-99

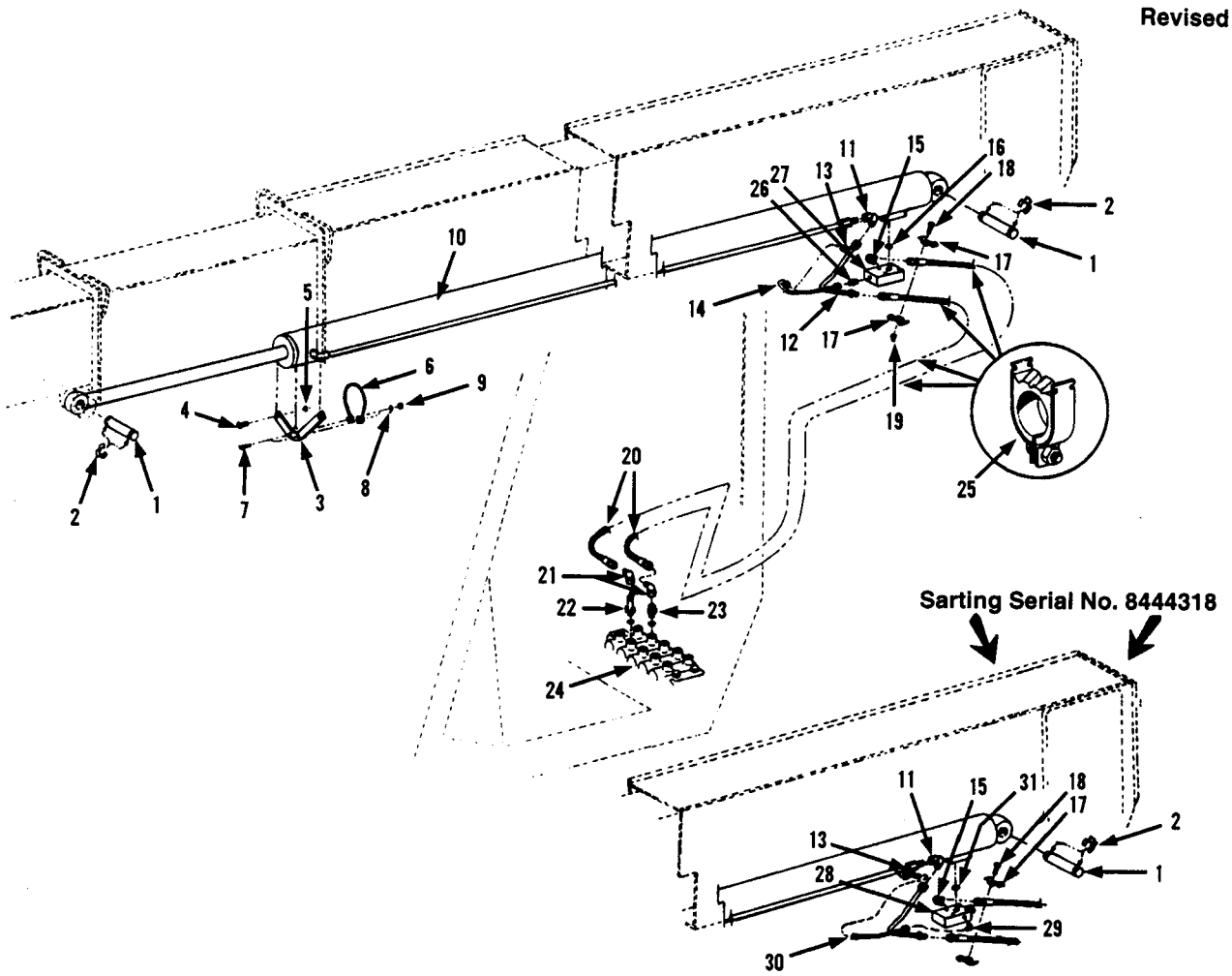

Item	Part No.	Qty.	Description Of Part
1	9020-7352	2	PIN
2	9002-8935	2	RETAINING RING
3	9040-3212	1	CROWD CYLINDER SUPORT
4	8820-1067	2	HEX HD CAPSCREW, 1/2-13X1-1/2 GR5
5	8850-1008	2	HEX NUT, 1/2-13
6	9020-7575	1	TIE DOWN CROWD
7	8820-1008	2	HEX HD CAPSCREW, 1/4-20X1-3/4 GR5
8	8856-1107	2	FLAT WASHER, 1/4
9	8850-1004	2	HEX NUT, 1/4-20
10		Ref	CROWD CYLINDER (see page 10-2 for details)
11	8874-3041	1	MALE ELBOW - 90 DEGREES 1/8X1/4 TUBE
12	9020-5825	1	TUBE ASSY
13	8866-2062	1	ELBOW - 90 DEGREES (includes o-ring)
	8859-1202	1	O-RING
14	9020-5824	1	TUBE ASSY
15	8866-2067	1	ELBOW - 90 DEGREES (includes o-ring)
	8859-1207	1	O-RING
16	8859-1102	1	O-RING (valve to cylinder)
17	9020-0482	2	HOSE CLAMP
18	8820-1105	1	HEX HD CAPSCREW, 5/8-11X4 GR5

Item	Part No.	Qty.	Description Of Part
19	8850-1006	1	HEX NUT, 5/8-11
20	8471-6039	2	HOSE ASSY
21	8866-2108	2	ELBOW - 90 DEGREES (swivel nut)
22	8866-2038	1	CONNECTOR (includes o-ring)
	8859-1207	1	O-RING
23	8866-2025	1	CONNECTOR (includes o-ring)
	8859-1209	1	O-RING
24		Ref	MAIN CONTROL VALVE (see page 10-7 for details)
25	9020-5792	4	HOSE CLAMP
26	8866-2017	1	CONNECTOR (includes o-ring)
	8859-1204	1	O-RING
27	9020-5237	1	COUNTERBALANCE VALVE
	9103-4030	AR	SEAL KIT
	8820-1073	4	HEX HD CAPSCREW, 1/2-13X3 GR5
28	9104-3232	1	COUNTERBALANCE VALVE
	9104-3245	1	LOAD CONTROL VALVE
	8820-1072	4	HEX HD CAPSCREW, 1/2-13X2-3/4 GR5
29	8866-2062	1	ELBOW - 90 DEGREES (includes o-ring)
	8859-1202	1	O-RING
30	9103-3092	1	TUBE ASSY
31	8859-1102	1	O-RING (valve to cylinder)

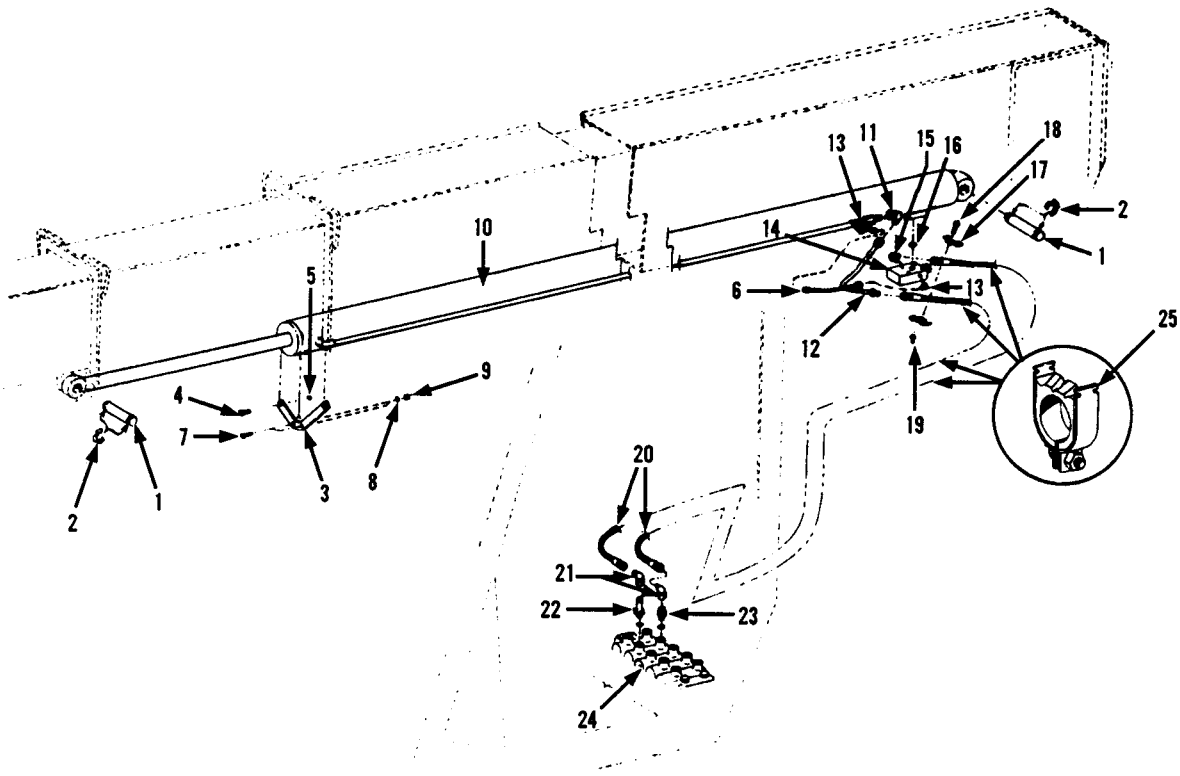

Item	Part No.	Qty.	Description Of Part
1	9020-7352	2	PIN
2	9002-8935	2	RETAINING RING
3	9040-3212	1	CROWD CYLINDER SUPPORT
4	8820-1067	2	HEX HD CAPSCREW, 1/2-13X1-1/2 GR5
5	8850-1008	2	HEX NUT, 1/2-13
6	9103-3092	1	TUBE ASSY
7	8820-1008	2	HEX HD CAPSCREW, 1/4-20X1-3/4 GR5
8	8856-1107	2	FLAT WASHER, 1/4
9	8850-1004	2	HEX NUT, 1/4-20
10	9080-1293	Ref	CROWD CYLINDER (see page10-2 for details)
11	8874-3041	1	MALE ELBOW - 90 DEGREES 1/8X1/4 TUBE
12	9020-5825	1	TUBE ASSY
13	8866-2062	2	ELBOW - 90 DEGREES (includes o-ring)
	8859-1202	2	O-RING
14	9104-3232	1	COUNTERBALANCE VALVE
	9104-3245	1	LOAD CONTROL VALVE
	8820-1072	4	HEX HD CAPSCREW, 1/2-13X2-3/4 GR5

Item	Part No.	Qty.	Description Of Part
15	8866-2067	1	ELBOW - 90 DEGREES (includes o-ring)
	8859-1207	1	O-RING
16	8589-1102	1	O-RING (valve to cylinder)
17	9020-0482	2	HOSE CLAMP
18	8820-1105	1	HEX HD CAPSCREW, 5/8-11X4 GR5
19	8850-1106	1	HEX NUT, 5/8-11
20	8471-7608	2	HOSE ASSY
21	8866-2108	2	ELBOW - 90 DEGREES (swivel nut)
22	8866-2038	1	CONNECTOR (includes o-ring)
	8859-1207	1	O-RING
23	8866-2025	1	CONNECTOR (includes o-ring)
	8859-1209	1	O-RING
24	9103-3168	Ref	MAIN CONTROL VALVE (see page 10-7 for details)
25	9020-5792	4	HOSE CLAMP

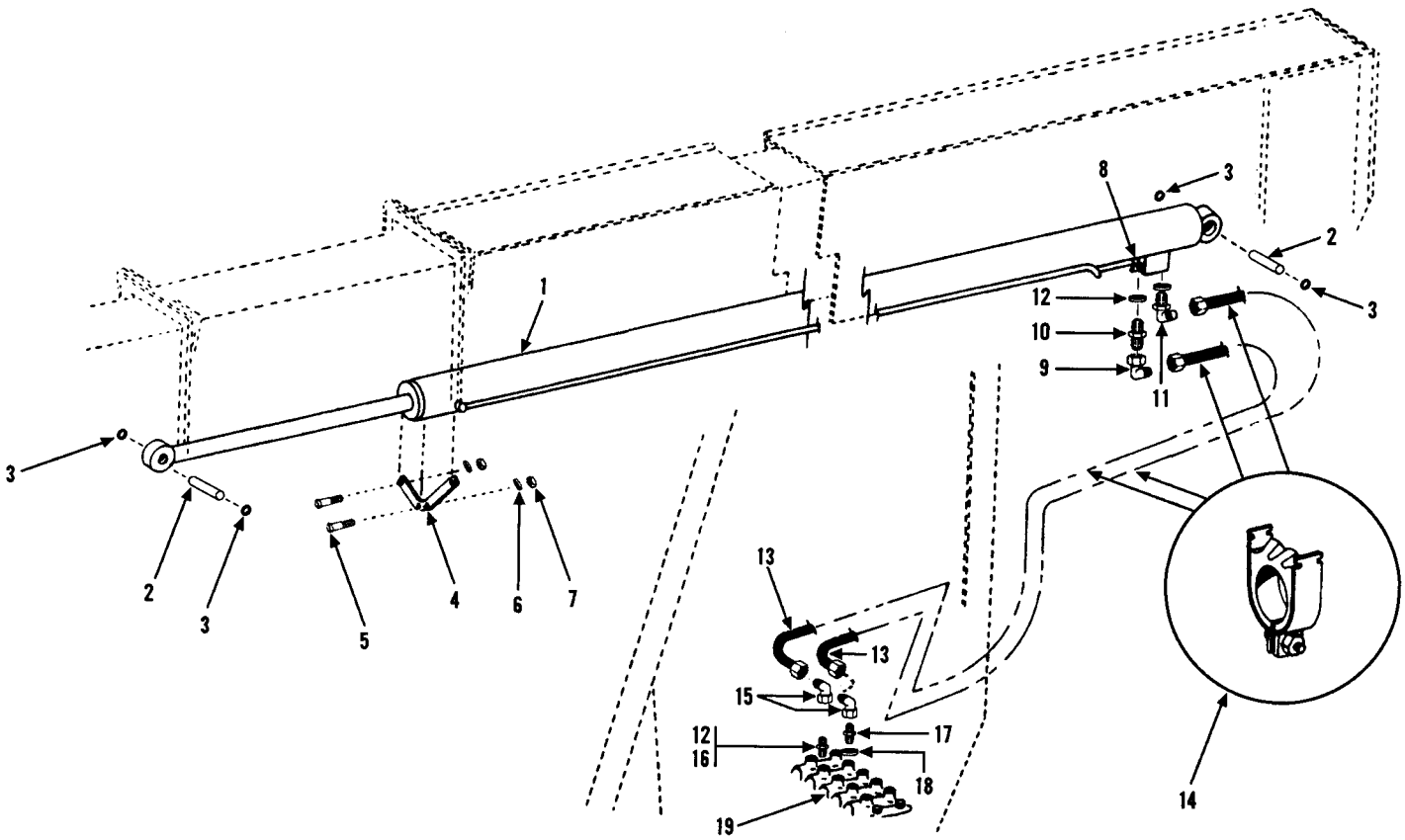

Item	Part No.	Qty.	Description Of Part
1		Ref	CROWD CYLINDER ASSY, (see page 10-2 for details)
2	9020-7352	2	PIN
3	9002-8935	4	RETAINING RING
4	9040-3212	1	CROWD CYLINDER SUPPORT
5	8820-1008	2	HEX HD CAPSCREW, 1/4-20X1-3/4, GR5
6	8856-1107	2	FLAT WASHER, 1/4
7	8850-1004	2	HEX NUT, 1/4-20
8	9103-4308	1	COUNTERBALANCE VALVE, (includes o-ring)
9	8866-2108	1	ELBOW, 90 DEGREES, (swivel nut)
10	8866-2008	1	CONNECTOR, (includes item 12)
11	8866-2067	1	ELBOW, 90 DEGREES, (includes item 12)
12	8859-1207	3	O-RING
13	8471-7608	2	HOSE ASSY
14	9020-5792	4	HOSE CLAMP
15	8866-2108	2	ELBOW, 90 DEGREES, (swivel nut)
16	8866-2038	1	CONNECTOR, (includes item 12)
17	8866-2025	1	CONNECTOR, (includes item 18)
18	8859-1209	1	O-RING
19		Ref	MAIN CONTROL VALVE ASSY, (see page 10-7 for details)

HYDRAULICS-TILT and TILT COMPENSATING

Starting Serial No. 8344001L
Revised 7-16-99

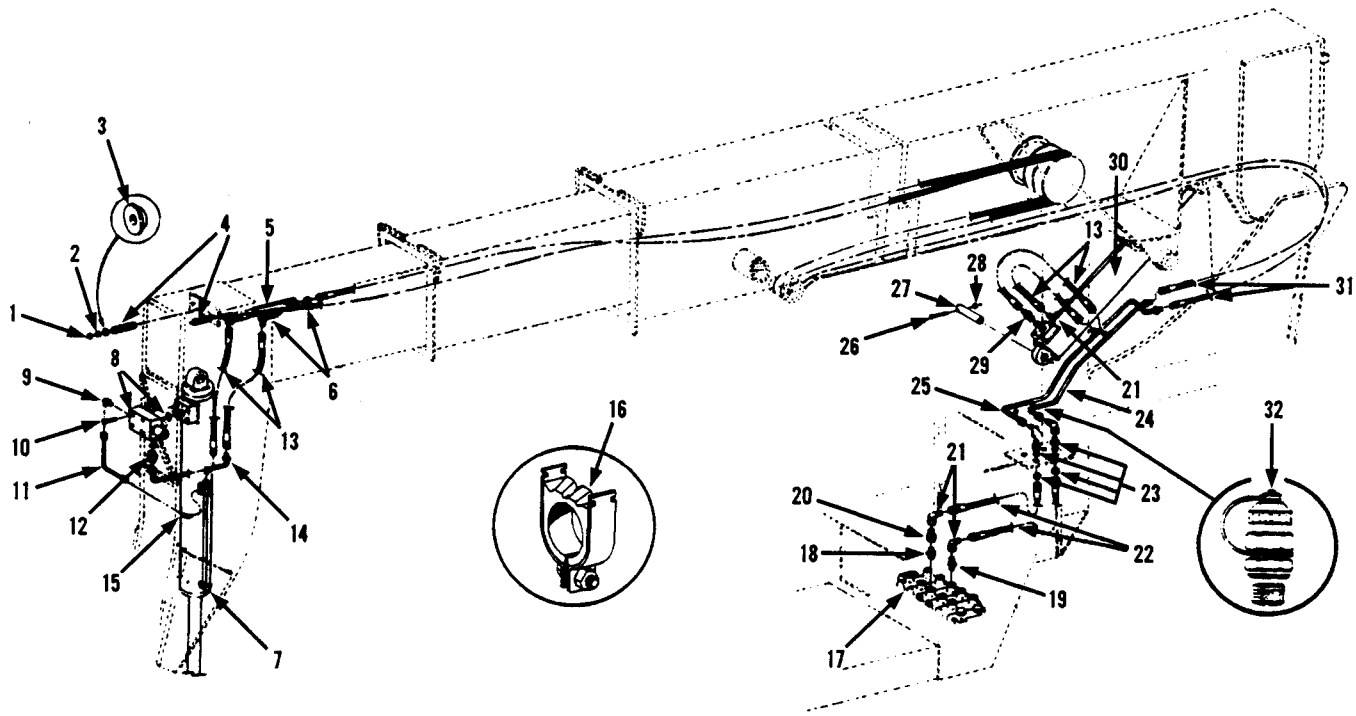

Item	Part No.	Qty.	Description Of Part
1	8850-1008	2	HEX NUT, 1/2-13
2	8850-1108	2	HEAVY HEX JAM NUT 1/2-13
3	9020-7041	2	RETAINER
4	9020-0313	2	SPRING
5	9040-3249	2	HOSE BULKHEAD BRACKET
6	9002-7180	2	90 DEGREE FITTING WITH NUT
7	9080-1357	1	TILT CYLINDER (6000# unit)
	9080-1327	1	TILT CYLINDER (8000# unit)
8	9020-5237	1	COUNTERBALANCE VALVE (includes o-ring) (6000# unit)
	9103-4030	AR	EXTERNAL O-RING KIT
	9002-8228	1	O-RING
	9103-1272	1	VALVE BLOCK (8000# unit)
	9020-5773	1	VALVE CARTRIDGE (8000# unit)
9	9002-7906	1	ELBOW - 90 DEGREE ADJUSTABLE
10	8820-1071	4	HEX HEAD CAPSCREW 1/2-13X2-1/2 GR5
11	9020-7451	1	TUBE ASSY
12	8866-2020	1	CONNECTOR (includes o-ring)
	8859-1207	1	O-RING
13	9002-2043	4	HIGH PRESSURE HOSE
14	9020-7452	1	TUBE ASSY
15	8874-3041	1	MALE ELBOW - 90 DEGREES 1/8X1/4 TUBE

Item	Part No.	Qty.	Description Of Part
16	9020-7463	10	HYDRA ZORB CLAMP
17	9103-3168	1	MAIN HYDRAULIC CONTROL VALVE
18	8866-2025	1	CONNECTOR (includes o-ring)
	8859-1209	1	O-RING
19	8345-1104	1	CONNECTOR
20	8692-3006	1	FEMALE CONNECTOR
21	8866-2107	5	ELBOW - 90 DEGREES (swivel nut)
22	9002-2043	2	HIGH PRESSURE HOSE
23	9002-9939	2	BULKHEAD ADAPTER WITH NUT
24	9020-7386	1	TUBE ASSY
25	9020-7387	1	TUBE ASSY
26	8820-1104	1	HEX HD CAPSCREW 5/8-11X3-3/4 GR5
27	9020-6892	1	COMPENSATING CYLINDER BASE PIN
28	8850-1010	1	HEX NUT, 5/8-11
29	8866-2021	1	CONNECTOR (includes o-ring)
	8859-1205	1	O-RING
30	9080-1291	1	TILT COMPENSATING CYLINDER (6000# unit)
	9080-1328	1	TILT COMPENSATING CYLINDER (8000#unit)
31	9020-6888	2	HIGH PRESSURE HOSE
32	9103-3032	2	MINI-CHECK

TILT and TILT COMPENSATING HYDRAULICS

Starting Serial No. 8744142G
Original Issue 8-87
Revised 7-16-99

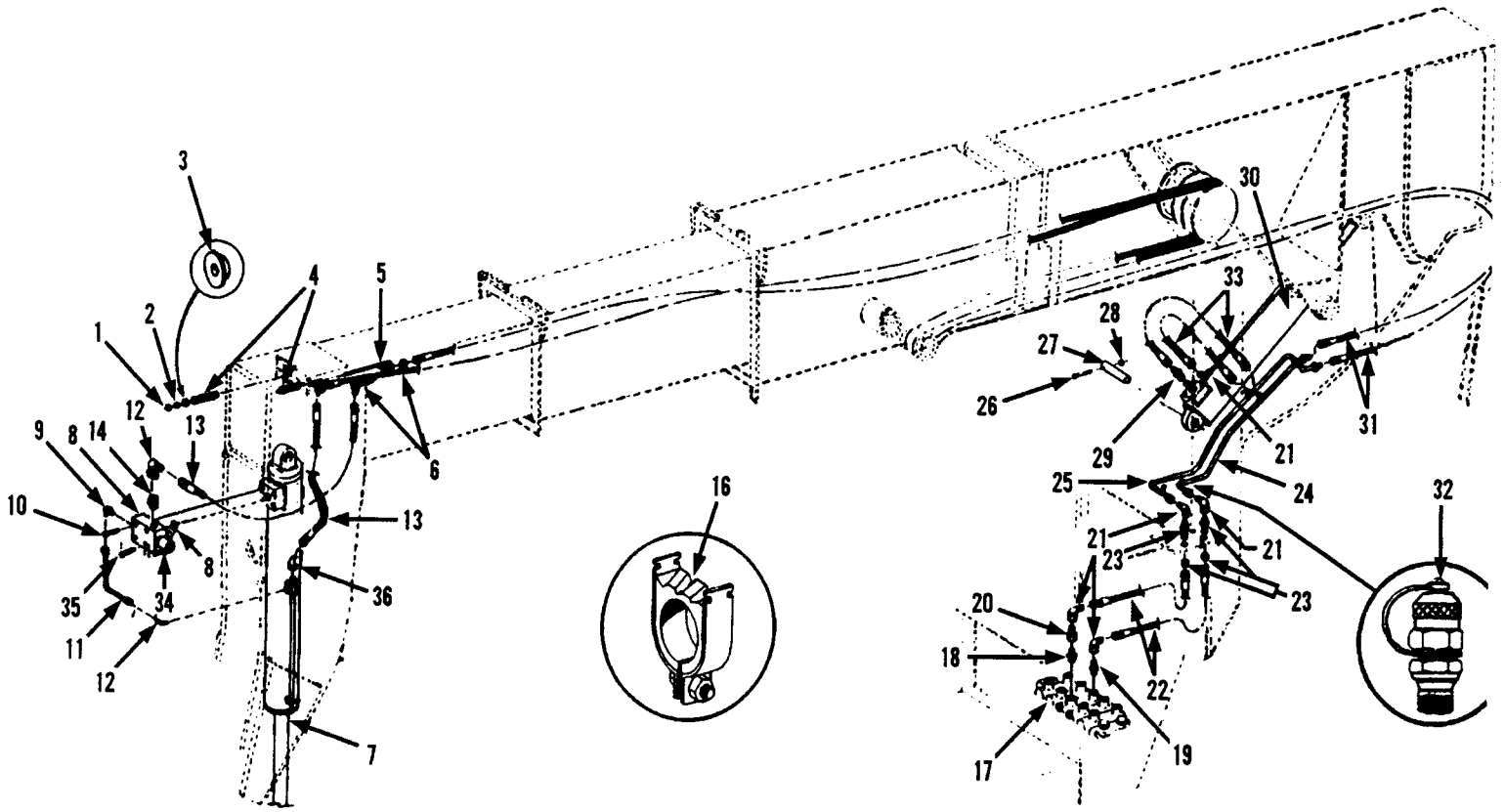

Item	Part No.	Qty.	Description Of Part
1	8850-1008	2	HEX NUT, 1/2-13
2	8850-1108	2	HEAVY HEX JAM NUT, 1/2-13
3	9020-7041	2	RETAINER
4	9020-0313	2	SPRING
5	9040-3249	2	BRACKET (hose bulkhead)
6	9002-7180	2	90° BULKHEAD FITTING (with nut)
7	9080-1327	1	TILT CYLINDER (see page 10-3.1)
8	9103-1272	1	VALVE BLOCK
	8859-1102	1	O-RING (block to cylinder)
9	8866-2062	1	ELBOW - 90 DEGREES (includes o-ring)
	8859-1202	1	O-RING
10	8820-1073	2	HEX HD CAPSCREW, 1/2-13X3 GR5
11	9020-7883	1	TUBE ASSY
12	8866-2106	1	ELBOW - 90 DEGREES (swivel nut)
13	9002-2043	2	HOSE ASSY
14	8866-2020	1	CONNECTOR (includes o-ring)
	8859-1207	1	O-RING
15	8874-3041	1	MALE ELBOW - 90 DEGREES 1/8X1/4
16	9020-7463	10	CLAMP
17		Ref	MAIN HYDRAULIC CONTROL VALVE (see page 10-7 for details)

Item	Part No.	Qty.	Description Of Part
18	8866-2025	1	CONNECTOR (includes o-ring)
	8859-1209	1	O-RING
19	8345-1102	1	CONNECTOR
20	8692-3006	1	FEMALE CONNECTOR
21	8866-2107	5	ELBOW - 90 DEGREES (swivel nut)
22	9002-2043	2	HOSE ASSY
23	9002-9939	2	BULKHEAD ADAPTER (with nut)
24	9020-7386	1	TUBE ASSY
25	9020-7387	1	TUBE ASSY
26	8820-1104	1	HEX HD CAPSCREW,5/8-11X3-3/4 GR5
27	9020-6892	2	PIN (comp. cyl. both ends)
28	8850-1010	1	HEX NUT, 5/8-11
29	8866-2021	1	CONNECTOR (includes o-ring)
	8859-1205	1	O-RING
30	9080-1328	1	TILT COMPENSATING CYLINDER (see page 10-3.1 for details)
31	9020-6888	2	HIGH PRESSURE HOSE
32	9103-3032	2	MINI-CHECK
33	9002-3042	2	HOSE ASSY
34	9020-5773	1	CARTRIDGE
35	8821-1105	2	SOCKECT HD CAPSCREW, 1/2-13X1 GR8
36	8866-2120	1	ELBOW - 45 DEGREES (swivel nut)

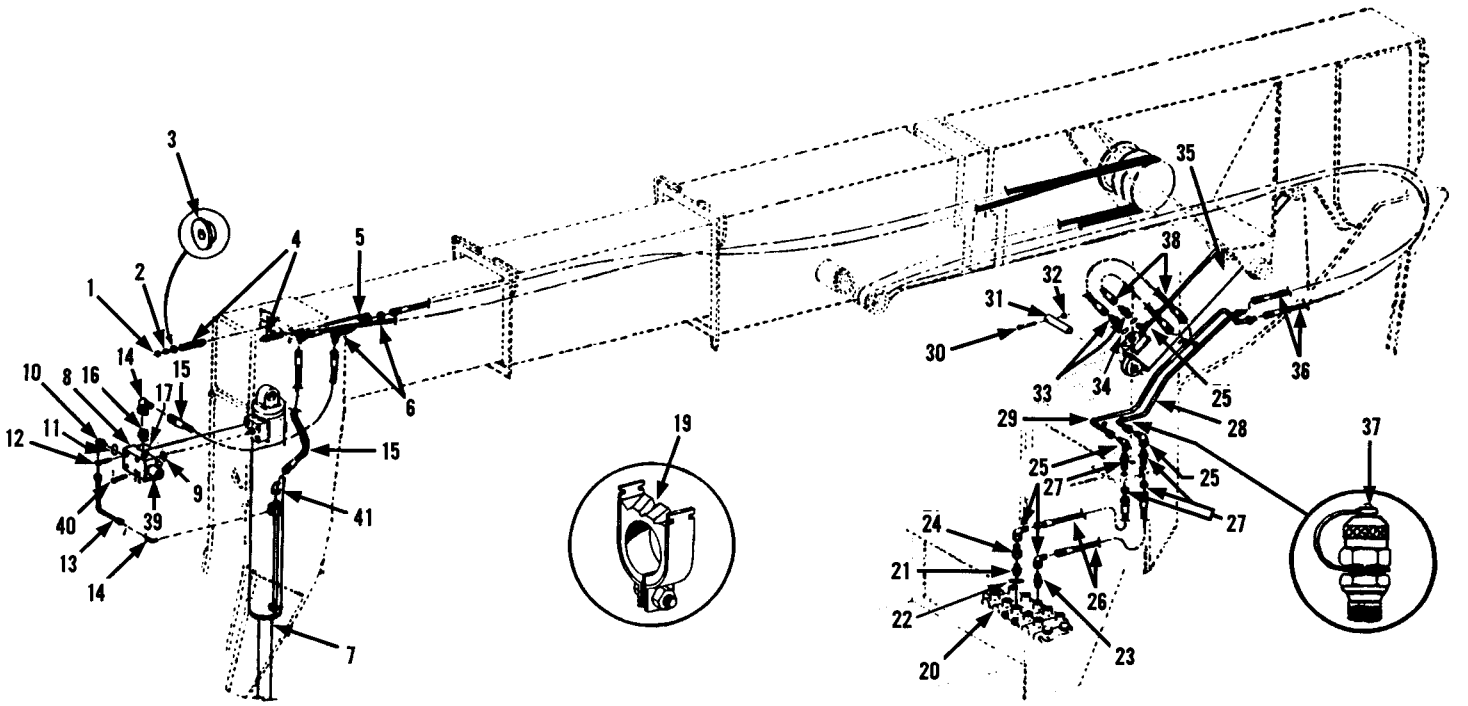

Item	Part No.	Qty.	Description Of Part
1	8850-1008	2	HEX NUT, 1/2-13
2	8850-1108	2	HEAVY HEX JAM NUT, 1/2-13
3	9020-7041	2	RETAINER
4	9020-0313	2	SPRING
5	9040-3249	2	BRACKET, (hose bulkhead)
6	9002-7180	2	BULKHEAD FITTING-90 DEGREE, (with nut)
7		Ref	TILT CYLINDER, (see page 10-3 for details)
8	9103-1272	1	VALVE BLOCK
9	8859-1102	1	O-RING, (block to cylinder)
10	8866-2062	1	ELBOW, 90 DEGREES, (includes item 11)
11	8859-1202	1	O-RING
12	8820-1073	2	HEX HD CAPSCREW, 1/2-13X3, GR5
13	9020-7883	1	TUBE ASSY
14	8866-2106	1	ELBOW, 90 DEGREES, (swivel nut)
15	8471-7922	2	HOSE ASSY
16	8866-2020	1	CONNECTOR, (includes item 17)
17	8859-1207	1	O-RING
18	8874-3041	1	MALE ELBOW, 90 DEGREES, 1/8X1/4
19	9020-7463	10	CLAMP
20		Ref	MAIN HYDRAULIC CONTROL VALVE, (see page 10-7 for details)

Item	Part No.	Qty.	Description Of Part
21	8866-2025	1	CONNECTOR, (includes item 22)
22	8859-1209	1	O-RING
23	8345-1102	1	CONNECTOR
24	8692-3006	1	FEMALE CONNECTOR
25	8866-2107	5	ELBOW, 90 DEGREES, (swivel nut)
26	9002-2043	2	HOSE ASSY
27	9002-9939	2	BULKHEAD ADAPTER, (with nut)
28	9020-7386	1	TUBE ASSY
29	9020-7387	1	TUBE ASSY
30	8820-1104	1	HEX HD CAPSCREW, 5/8-11X3-3/4, GR5
31	9020-6892	2	PIN, (comp. cyl. both ends)
32	8850-1010	1	HEX NUT, 5/8-11
33	8866-2021	2	CONNECTOR, (includes item 34)
34	8859-1205	2	O-RING
35		Ref	TILT COMPENSATING CYLINDER, (see page 10-4 for details)
36	9020-6888	2	HIGH PRESSURE HOSE
37	9103-3032	2	MINI-CHECK
38	9002-3042	2	HOSE ASSY
39	9020-5773	1	CARTRIDGE
40	8821-1105	2	SOCKECT HD CAPSCREW, 1/2-13X1, GR8
41	8866-2120	1	ELBOW, 45 DEGREES, (swivel nut)

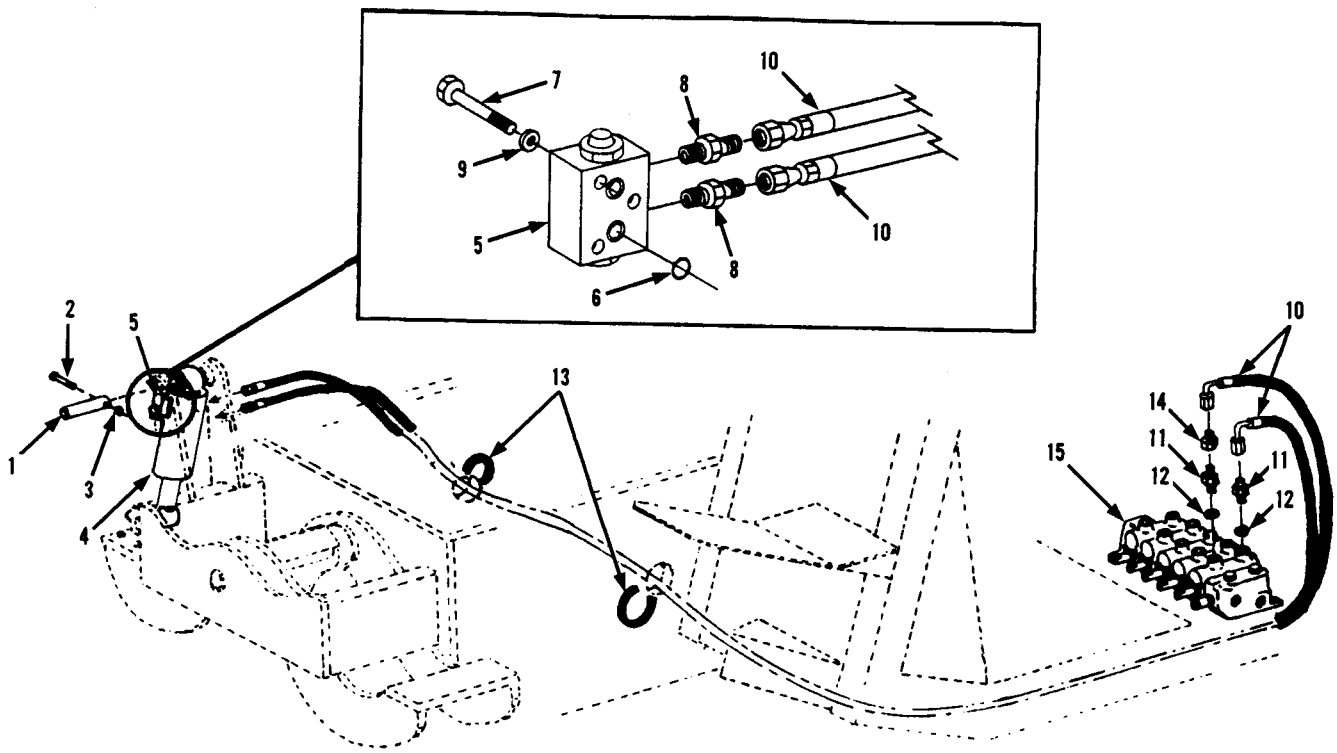

Item	Part No.	Qty.	Description Of Part
1	9040-2876	1	SWAY CYLINDER BASE PIN
2	8820-1104	1	HEX HD CAPSCREW, 5/8-11X3-3/4, GR5
3	8850-1010	1	HEX NUT, 5/8-11
4	9104-3139	1	SWAY CYLINDER (see page 10-5)
5	9105-3354	1	DUAL P.O. CHECK VALVE (see page 10-25 for details)
6	8859-1012	1	O-RING
7	8820-1041	3	HEX HD CAPSCREW, 3/8-16X2-1/2, GR5
8	8866-2006	2	CONNECTOR (includes o-ring)
	8859-1205	2	O-RING
9	8855-1011	3	LOCKWASHER, 3/8
10	9103-3224	2	HOSE ASSY
11	8866-2020	2	CONNECTOR (includes item 12)
12	8859-1207	2	O-RING
13	9020-6200	2	TRIM LOCK
14	8365-1133	1	REDUCER
15	9103-3168	Ref	MAIN CONTROL VALVE ASSY (see page 10-7 for details)

UNIT SWAY HYDRAULICS

Starting Serial No. 8344001L
Thru Serial No. 8644030G
Revised 7-16-99

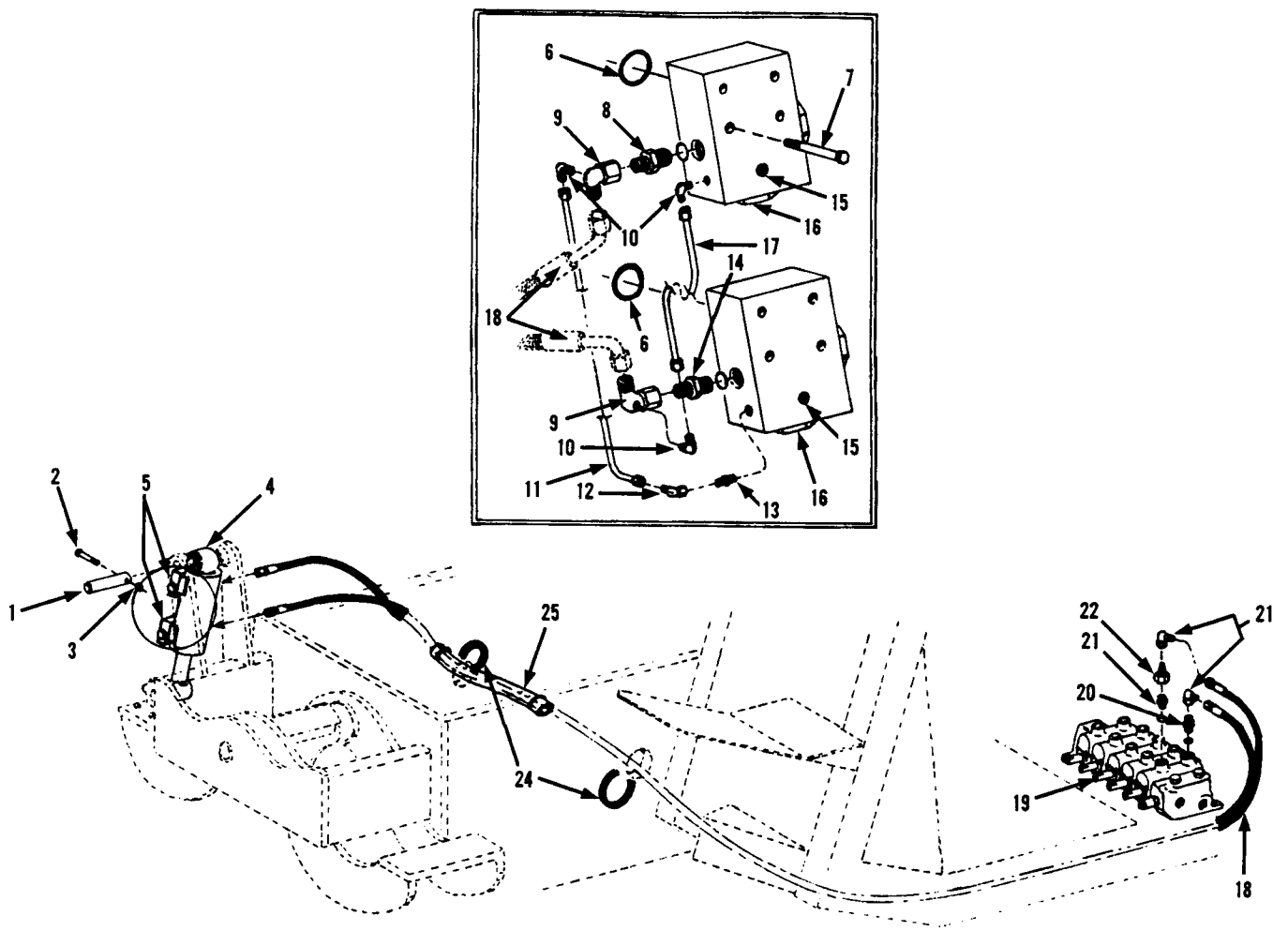

Item	Part No.	Qty.	Description Of Part
1	9040-2876	1	SWAY CYLINDER BASE PIN
2	8820-1104	1	HEX HD CAPSCREW, 5/8-11X3-3/4, GR5
3	8850-1010	1	HEX NUT, 5/8-11
4	9080-1270	1	SWAY CYLINDER
5	9040-0066	2	BLOCK VALVE
6	9002-8217	2	O-RING (valve to cylinder)
7	8820-1042	8	HEX HD CAPSCREW, 3/8-16X2-3/4, GR5
8	9020-7390	1	CONNECTOR (with orifice) includes o-ring
	9020-3421	1	ORIFICE (for connector above)
9	9020-7389	2	SPECIAL 90 DEGREE ELBOW
10	9002-6400	3	90 DEGREE STAIGHT ELBOW
11	9020-7391	1	TUBE ASSY
12	8866-2103	1	ELBOW - 90 DEGREES (swivel nut)
13	8874-3000	1	MALE ADAPTER 1/8X1/4 TUBE

Item	Part No.	Qty.	Description Of Part
14	8866-2020	1	CONNECTOR (includes o-ring)
	8859-1207	1	O-RING
15	8871-1280	2	HEX SOCKET PIPE PLUG 1/8
16	9060-0727	2	VALVE CARTRIDGE
17	9020-7392	1	TUBE ASSY
18	9103-3224	2	HIGH PRESSURE HOSE
19	9103-3168	1	MAIN HYDRAULIC VALVE
20	8866-2020	1	CONNECTOR (includes o-ring)
	8859-1207	1	O-RING
21	8866-2106	2	ELBOW - 90 DEGREES (swivel nut)
22	8365-1133	1	REDUCER
23	8866-2008	1	CONNECTOR (includes o-ring)
	8859-1207	1	O-RING
24	9020-6200	2	RUBBER GROMMET (bulk, in frame)
25	9103-3043	1	HOSE
	9002-7184	3	TY-RAP

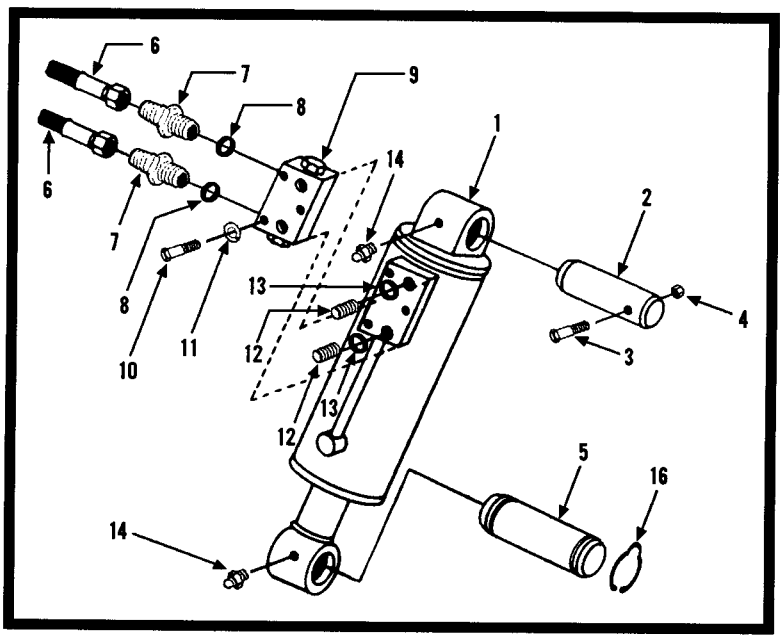

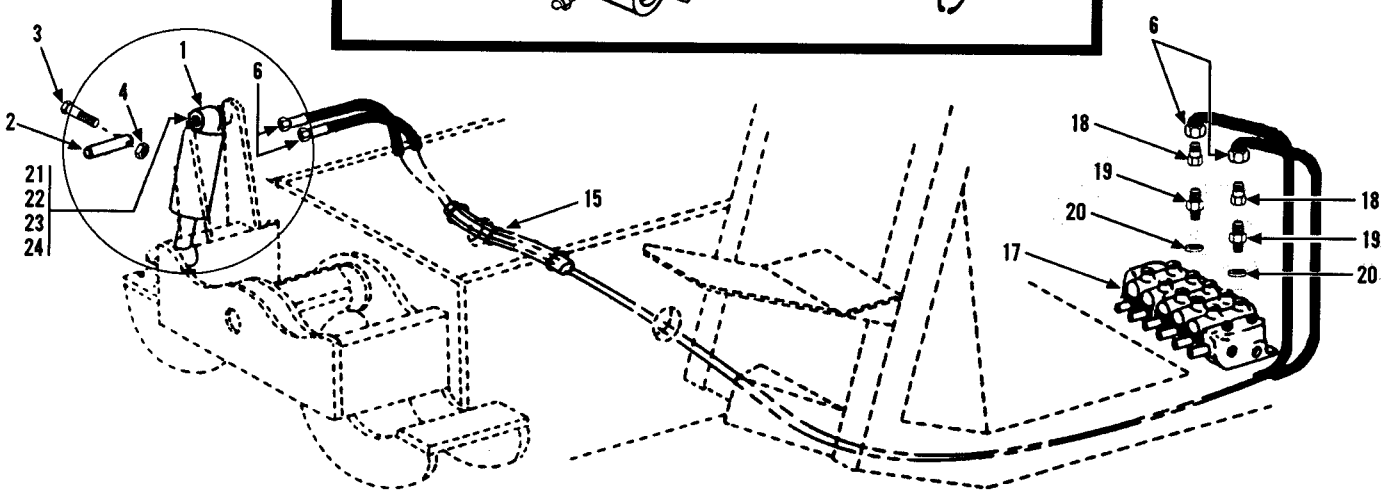

Item	Part No.	Qty.	Description Of Part
	9104-5103	1	SWAY CYLINDER ASSY, (includes items 1, 7 thru 11 & 13)
1		Ref	SWAY CYLINDER, (see page 10-5 for details)
2	9040-2876	1	PIN
3	8320-1044	1	HEX HD CAPSCREW, 5/8-11X4, GR8
4	8850-1010	1	HEX NUT, 5/8-11
5	9020-7352	1	PIN
6	9103-3224	1	HOSE ASSY
7	8866-2006	2	CONNECTOR, (includes item 8)
8	8859-1205	2	O-RING
9		1	DUAL P.O. CHECK VALVE ASSY, (see page 10-25 for details)
10	8820-1041	3	HEX HD CAPSCREW, 3/8-16X2-1/2, GR5

Item	Part No.	Qty.	Description Of Part
11	8855-1011	3	LOCKWASHER, 3/8
12	9104-1387	2	ORIFICE PLUG
13	8859-1012	2	O-RING
14	8867-1033	2	LUBE FITTING-STRAIGHT, 1/4-28
15	9103-3043	1	HOSE
16	9002-8935	2	RETAINING RING
17		Ref	MAIN CONTROL VALVE ASSY, (see page 10-7 for details)
18	8365-1133	2	REDUCER
19	8866-2008	2	CONNECTOR, (includes item 20)
20	8859-1207	2	O-RING
21	9020-7730	AR	SHIM, (1/4" thick)
22	9020-7729	AR	SHIM, (10 gauge)
23	9020-7728	AR	SHIM, (16 gauge)
24	9020-7727	AR	SHIM, (20 gauge)

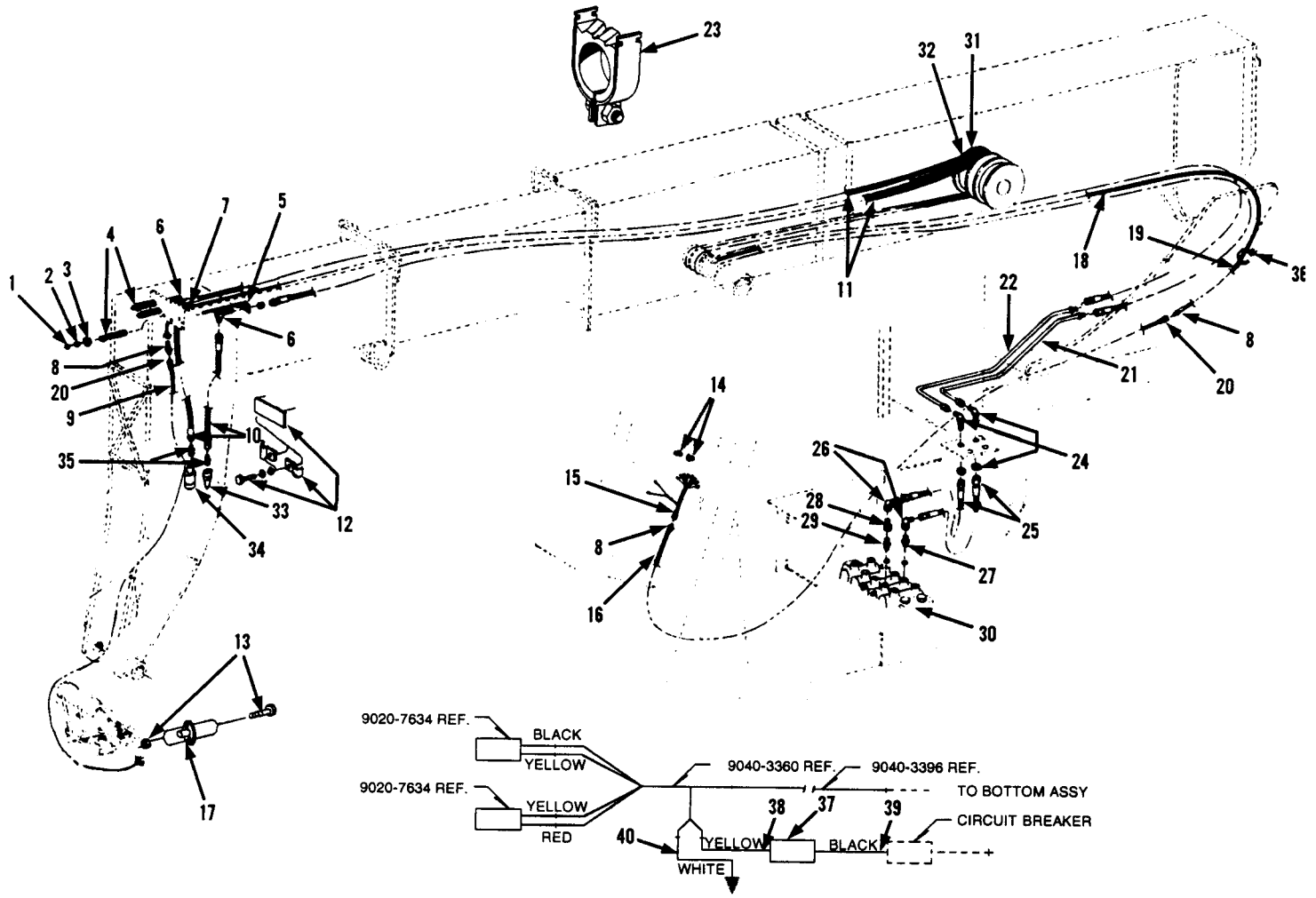

CIRCUIT BREAKER

* NOTE: WHEN UTILIZING AJOINING PARTS LISTS PAY CAREFUL ATTENTION TO PAGES REFERENCED.

Item	Part No.	Qty.	Description Of Part
	9103-5017		AUXILIARY HYDRAULIC ASSY (includes following items from pg 7-1)
9	9020-0290	6	BEARING
19	9020-6045	1	CONTROL PANEL
	9002-0489	4	#2 PAN HD SCREW
21	9020-5981	1	CONTROL HANDLE
22	9020-0688	1	CONTROL ROD BEARING
24	9020-0559	1	SPRING
25	8856-1113	10	FLAT WASHER
26	9002-1557	1	CLEVIS PIN
	8863-1309	1	COTTER PIN, 3/32X3/4
27	9020-5983	1	BELLCRANK
28	9040-2904	1	CONTROL PANEL
			(includes following items from pg 7-3)
1	9020-2361	1	CONTROL ROD
2	8882-1004	3	ADJUSTABLE YOKE END
3	9002-7987	3	SPRING CLEVIS
4	8850-1406	3	HEX NUT, 3/8-24
5	9020-5533	1	BELLCRANK

Item	Part No.	Qty.	Description Of Part
9	9020-5546	1	LINKAGE ROD
22	9002-1552	1	CLEVIS PIN
	8863-1301	1	COTTER PIN, 1/16X1/2
			(includes following items from pg 9-9)
21	9020-7393	1	TUBE ASSY
22	9104-3196	1	TUBE ASSY
24	9002-9938	2	90 DEG BULKHEAD FITTING (includes nut)
25	9002-2043	2	HOSE ASSY
26	8866-2107	2	ELBOW - 90 DEGREES (swivel nut)
27	8866-2022	1	CONNECTOR (includes o-ring)
	8859-1207	1	O-RING
28	8692-3006	1	REDUCER - EXPANDER
29	8866-2008	1	CONNECTOR (includes o-ring)
	8859-1207	1	O-RING
37	9020-6347	1	CIRCUIT BREAKER
38	9020-7645	1	JUMPER WIRE
39	9020-0351	1	JUMPER WIRE
40	9020-7716	1	JUMPER WIRE

* NOTE: WHEN UTILIZING AJOINING PARTS LISTS PAY CAREFUL ATTENTION TO PAGES REFERENCED.

Item	Part No.	Qty.	Description Of Part
	9103-5018		AUXILIARY HYDRAULIC PARTS (includes the following parts from pg 9-9)
1	8850-1108	3	HEX JAM NUT, 1/2-13
2	8850-1008	3	HEX NUT, 1/2-13
3	9020-7041	3	SPRING RETAINER
4	9020-0313	3	SPRING
5	9040-3249	3	ADJUSTING BULKHEAD
6	9002-7180	2	90 DEGREE BULKHEAD FITTING (includes nut)
10	7713-3147	2	HOSE ASSY

Item	Part No.	Qty.	Description Of Part
11	9020-6888	2	HOSE ASSY
12	9103-1186	1	HOSE MOUNTING BAR
	8652-1144	2	HOSE CLAMP
	8820-1032	1	HEX HD CAPSCREW, 3/8-16X5/8, GR5
	8855-1011	1	LOCKWASHER, 3/8
	8855-1109	1	FLAT WASHER, 3/8
31	9104-3100	1	SHEAVE
32	9103-1069	1	SPACER
33	9020-4244	1	HYDRAULIC COUPLER - MALE
34	9020-4245	1	HYDRAULIC COUPLER - FEMALE
35	8866-1013	2	MALE CONNECTOR, 1/2X1/2 TUBE

Item	Part No.	Qty.	Description Of Part
	9103-5082		AUXILIARY ELECTRIC INSTALLATION (includes the following items from pg 7-1)
4	9020-0299	1	KNOB
9	9020-0290	2	BEARING
20	9020-6128	1	CONTROL HANDLE
22	9020-0688	1	BEARING
23	9020-6222	1	SPACER
26	9002-1557	1	CLEVIS PIN
	8863-1309	1	COTTER PIN, 3/32X3/4
27	9020-5983	1	BELLCRANK
36	8867-1008	1	LUBE FITTING - STRAIGHT, 1/4-28

Item	Part No.	Qty.	Description Of Part
			(includes the following items from pg 9-9)
13	8820-1003	2	HEX HD CAPSCREW, 1/4-20x3/4, GR5
	8855-1009	2	LOCKWASHER, 1/4
	8850-1004	2	HEX NUT, 1/4-20
15	9040-3360	1	AUXILIARY DASH HARNESS
16	9040-3396	1	AUXILIARY WIRING HARNESS
17	9020-7661	1	FEMALE ELECTRICAL SOCKET
36	9002-7187	20	NYLON TIES
37	9020-6347	1	CIRCUIT BREAKER
38	9020-7645	1	JUMPER WIRE
39	9020-0351	1	JUMPER WIRE
40	9020-7716	1	JUMPER WIRE

Item	Part No.	Qty.	Description Of Part
	9103-5087		AUXILIARY HYDRAULIC WITH ELECTRICS (includes the following parts from pg 7-1)
1	8850-1108	3	HEX JAM NUT, 1/2-13
2	8850-1008	3	HEX NUT, 1/2-13
3	9020-7041	3	SPRING RETAINER
4	9020-0313	3	SPRING
5	9040-3249	3	ADJUSTABLE BULKHEAD
6	9002-7180	2	90 DEGREE BULKHEAD FITTING (includes nut)
8	9002-8955	3	ELECTRICAL CONNECTOR (male)
9	9020-7470	1	WIRING HARNESS
10	7713-3147	2	HOSE ASSY
11	9020-6888	2	HOSE ASSY
12	9103-1186	1	HOSE MOUNT BAR
	8652-1144	2	HOSE CLAMP
	8820-1032	1	HEX HD CAPSCREW, 3/8-16X5/8, GR5

Item	Part No.	Qty.	Description Of Part
	8855-1011	1	LOCKWASHER, 3/8
	8856-1109	1	FLAT WASHER, 3/8
13	8820-1003	2	HEX HD CAPSCREW, 1/4-20X3/4, GR5
	8855-1009	2	LOCKWASHER, 1/4
	8850-1004	2	HEX NUT, 1/4-20
17	9020-7661	1	FEMALE ELECTRICAL SOCKET
18	9020-7243	1	CABLE COVER HOSE
19	9020-7633	1	AUXILIARY WIRING HARNESS
31	9104-3101	1	SHEAVE
33	9020-4244	1	HYDRAULIC COUPLER - MALE
34	9020-4245	1	HYDRAULIC COUPLER - FEMALE
35	8866-1013	2	MALE CONNECTOR, 1/2X1/2 TUBE
36	9002-7187	20	NYLON TIES
41	9002-8978	1	CABLE CLAMP

* NOTE: WHEN UTILIZING AJOINING PARTS LISTS PAY CAREFUL ATTENTION TO PAGES REFERENCED.

Item	Part No.	Qty.	Description Of Part
	9103-5109		AUXILIARY HYDRAULIC FIELD KIT (icnludes the following items from pg 7-3)
9	9020-5546	1	LINKAGE ROD (includes following items from pg 9-9)
26	8866-2107	2	ELBOW - 90 DEGREE (swivel nut)
27	8866-2022	1	CONNECTOR (includes o-ring)
	8859-1207	1	O-RING
28	8692-3006	1	REDUCER - EXPANDER
29	8866-2008	1	CONNECTOR (includes o-ring)
	8859-1207	1	O-RING
			(includes the following items from pg 10-7)
	9103-3239	1	CONVERSION KIT

Item	Part No.	Qty.	Description Of Part
	9103-5169		AUXILIARY ELECTRICS FIELD KIT (includes the following items from pg 9-9)
1	8850-1108	1	HEX JAM NUT, 1/2-13
2	8850-1008	1	HEX NUT, 1/2-13
3	9020-7041	1	SPRING RETAINER
4	9020-0313	1	SPRING
5	9040-3249	1	ADJUSTABLE BULKHEAD
7	9020-7583	1	STRAIGHT BULKHEAD FITTING (includes nut)
8	9002-8955	1	ELECTRICAL CONNECTOR (male)
9	9020-7470	1	WIRING HARNESS
18	9020-7243	1	CABLE COVER HOSE
19	9020-7633	1	AUXILIARY WIRING HARNESS
31	9104-3101	1	SHEAVE
36	9002-7187	20	NYLON TIES
41	9002-8978	1	CABLE CLAMP
	9020-7464	1	CUSHION CLAMP (not shown)

HYDRAULICS-OIL COOLER and PILOT PUMP

Starting Serial No. 8344001
Thru Serial No. 8444277
Revised 7-16-99

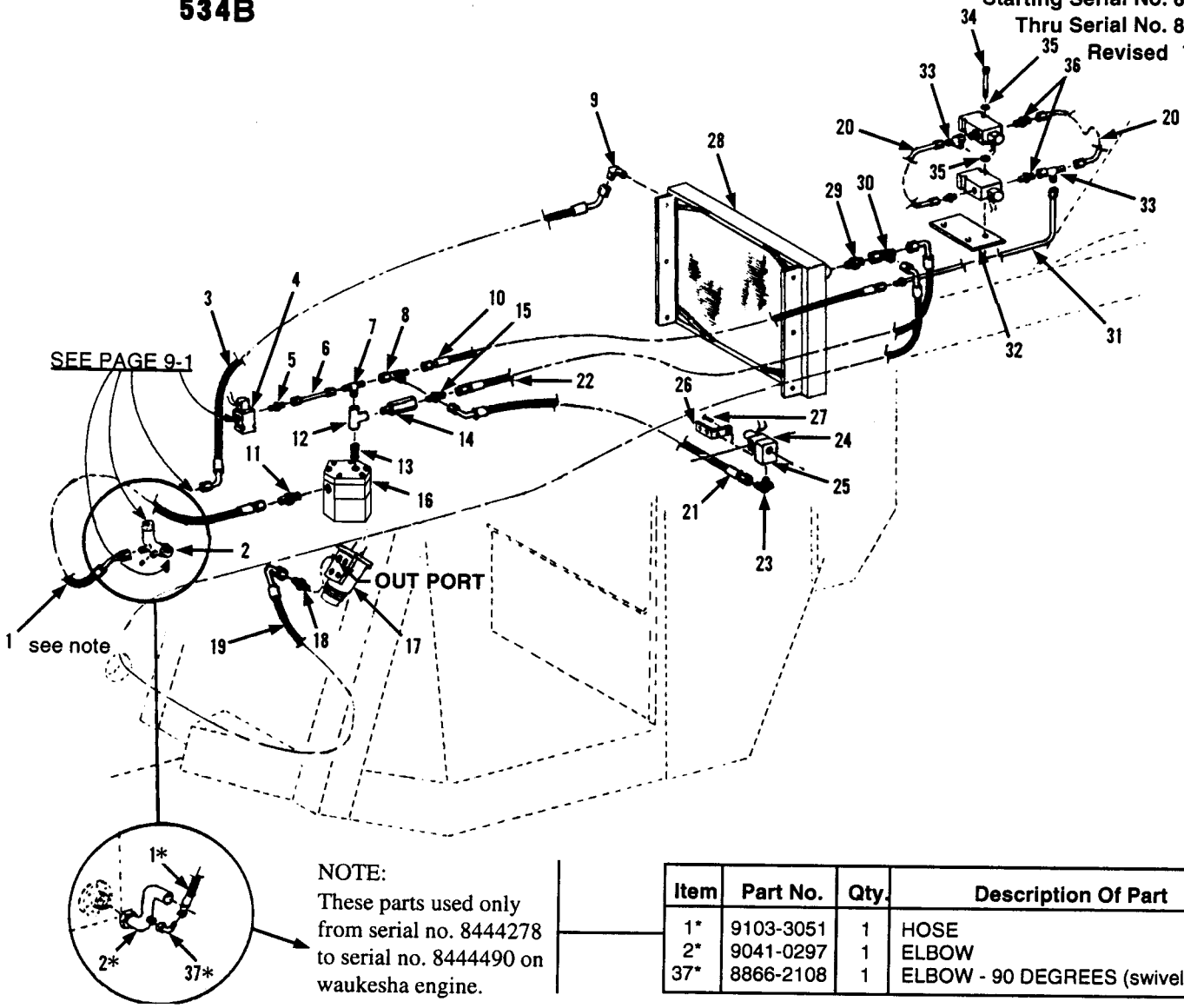

NOTE:
These parts used only from serial no. 8444278 to serial no. 8444490 on waukesha engine.

Item	Part No.	Qty.	Description Of Part
1*	9103-3051	1	HOSE
2*	9041-0297	1	ELBOW
37*	8866-2108	1	ELBOW - 90 DEGREES (swivel)

Item	Part No.	Qty.	Description Of Part
1	9020-7407	1	HIGH PRESSURE HOSE
2	9020-7688	1	TUBE ASSY
3	9020-7398	1	HIGH PRESSURE HOSE
4	9020-6769	3	SOLENOID VALVE
5	9002-7360	1	CONNECTOR
6	9060-2566	1	TUBE ASSY
7	8866-1245	1	MALE OUTLET TEE, 3/8X1/2 TUBE
8	8866-2240	1	SWIVEL NUT RUN TEE, 1/2 TUBE
9	8682-1248	1	ELBOW - 90 DEGREES
10	9020-7664	1	HIGH PRESSURE HOSE
11	9002-8966	1	CONNECTOR
12	8871-2073	1	TEE, 1/8
13	8870-1003	1	CLOSE NIPPLE, 3/8X1
14	9020-7353	1	CHECK VALVE
15	8874-3038	1	MALE ELBOW - 45 DEGREES 3/8X3/8 TUBE
16	9040-3305	1	PILOT PUMP
17	9020-6762	1	STEERING ORBITAL
18	8866-2006	1	CONNECTOR (includes o-ring)
	8859-1205	1	O-RING (out port)

Item	Part No.	Qty.	Description Of Part
19	8471-7521	1	HIGH PRESSURE HOSE
20	9020-7666	2	TUBE ASSY
21	9020-7694	1	HIGH PRESSURE HOSE
22	9020-7408	1	HIGH PRESSURE HOSE
23	9002-8499	1	90 DEGREE ELBOW (adjustable)
24	9020-7755	1	CONTROL VALVE
25	9060-2895	1	ADAPTER BLOCK
26	9020-7756	1	ANGLE BRACKET
27	8820-1005	2	HEX HD CAPSCREW, 1/4-20X1, GR5
28	9020-6752	1	HYDRAULIC OIL COOLER
29	8866-2020	1	CONNECTOR (includes o-ring)
	8859-1207	1	O-RING
30	8866-2240	1	SWIVEL NUT RUN TEE, 3/8 TUBE
31	9020-7713	1	TUBE ASSY
32	9020-7693	1	VALVE MOUNTING PLATE
33	8866-2239	2	SWIVEL NUT RUN TEE, 3/8 TUBE
34	8820-1008	2	HEX HD CAPSCREW, 1/4-20X1-3/4 GR5
35	8856-1107	4	FLAT WASHER, 1/4

HYDRAULICS-OIL and PILOT PUMP

Starting Serial No. 8344001L
Thru Serial No. 8444490
Original Issue 5-85
Revised 7-16-99

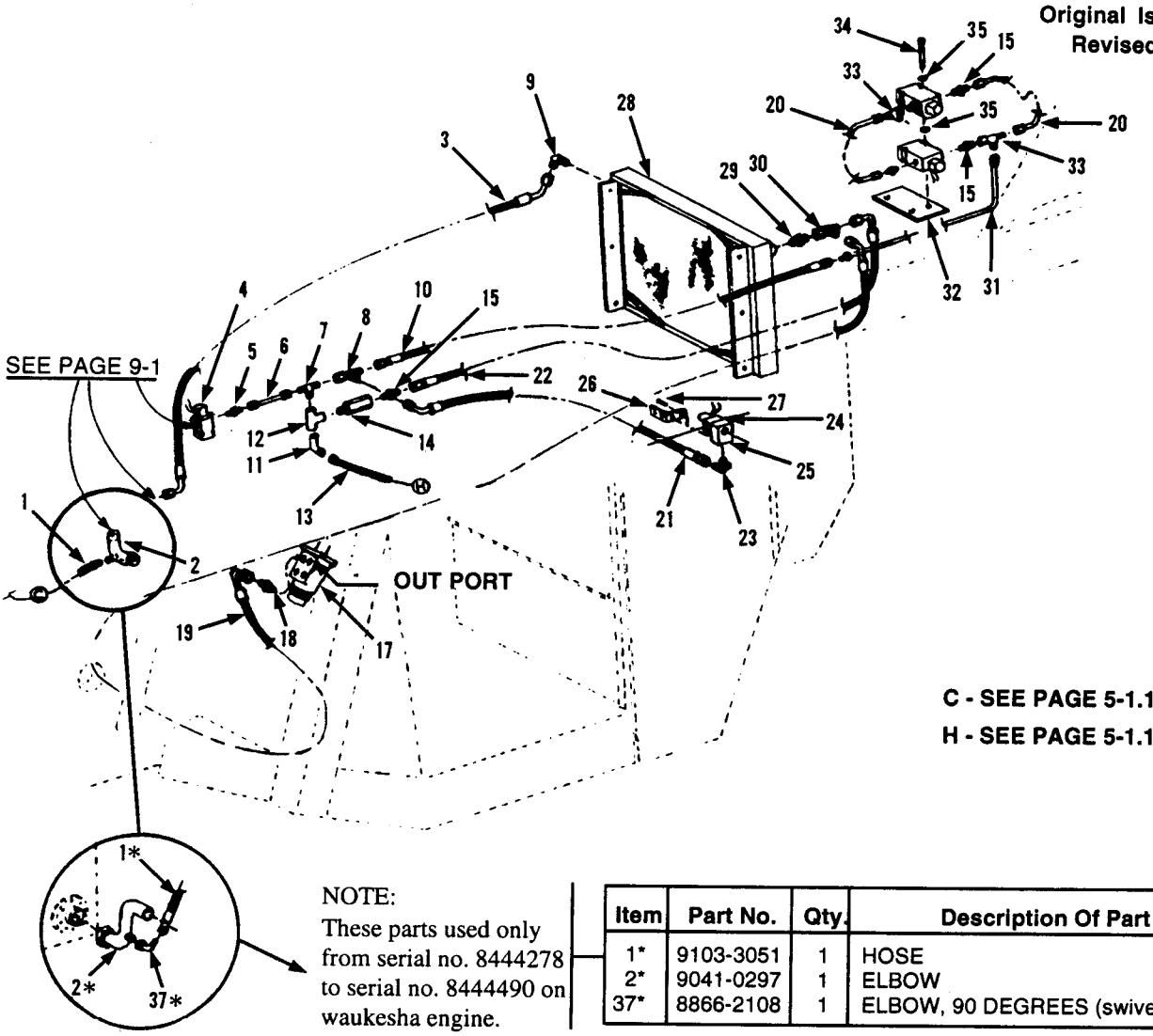

NOTE:
These parts used only from serial no. 8444278 to serial no. 8444490 on waukesha engine.

Item	Part No.	Qty.	Description Of Part
1*	9103-3051	1	HOSE
2*	9041-0297	1	ELBOW
37*	8866-2108	1	ELBOW, 90 DEGREES (swivel)

Item	Part No.	Qty.	Description Of Part
1	9103-3179	1	HOSE
2	9103-3178	1	SUCTION TUBE
3	9020-7398	1	HIGH PRESSURE HOSE
4	9020-6739	3	SOLENOID VALVE
5	9002-7360	1	CONNECTOR
6	9060-2566	1	TUBE ASSY
7	8866-1245	1	MALE OUTLET TEE, 3/8X1/2 TUBE
8	8866-2240	1	SWIVEL NUT RUN TEE, 1/2 TUBE
9	8682-1248	1	ELBOW - 90 DEGREES
10	9020-7664	1	HIGH PRESSURE HOSE
11	8866-2085	1	ELBOW - 45 DEGREES (includes o-ring)
	8859-1205	1	O-RING
12	8871-2073	1	TEE, 1/8
13	8471-7470	1	HOSE ASSY
14	9020-7353	1	CHECK VALVE
15	8874-3038	1	MALE ELBOW - 45 DEGREES 3/8X3/8 TUBE
16	9103-3156	1	PILOT PUMP (see page 5-1.1)
17	9020-6762	1	STEERING ORBITAL
18	8866-2006	1	CONNECTOR (includes o-ring)
	8859-1205	1	O-RING

Item	Part No.	Qty.	Description Of Part
19	8471-7521	1	HIGH PRESSURE HOSE
20	9020-7666	2	TUBE ASSY
21	9020-7694	1	HIGH PRESSURE HOSE
22	9020-7408	1	HIGH PRESSURE HOSE
23	9002-8499	1	ELBOW - 90 DEGREES (adjustable)
24	9020-7755	1	CONTROL VALVE
25	9060-2895	1	ADAPTER BLOCK
26	9020-7756	1	ANGLE BRACKET
27	8820-1005	2	HEX HD CAPSCREW, 1/4-20X1, GR5
28	9020-6752	1	HYDRAULIC OIL COOLER
29	8866-2020	1	CONNECTOR (includes o-ring)
	8859-1207	1	O-RING
30	8866-2240	1	SWIVEL NUT RUN TEE, 1/2 TUBE
31	9020-7713	1	TUBE ASSY
32	9020-7693	1	VALVE MOUNTING PLATE
33	8866-2239	2	SWIVEL NUT RUN TEE, 3/8 TUBE
34	8820-1008	2	HEX HD CAPSCREW, 1/4-20X1-3/4, GR5
35	8856-1107	4	FLAT WASHER, 1/4

HYDRAULICS-OIL COOLER and PILOT PUMP

Starting Serial No. 8444491
Thru Serial No. 8744114G
Excluding Serial No. 8744079G
Perkins Egine Only
Original Issue 2-85
Revised 7-16-99

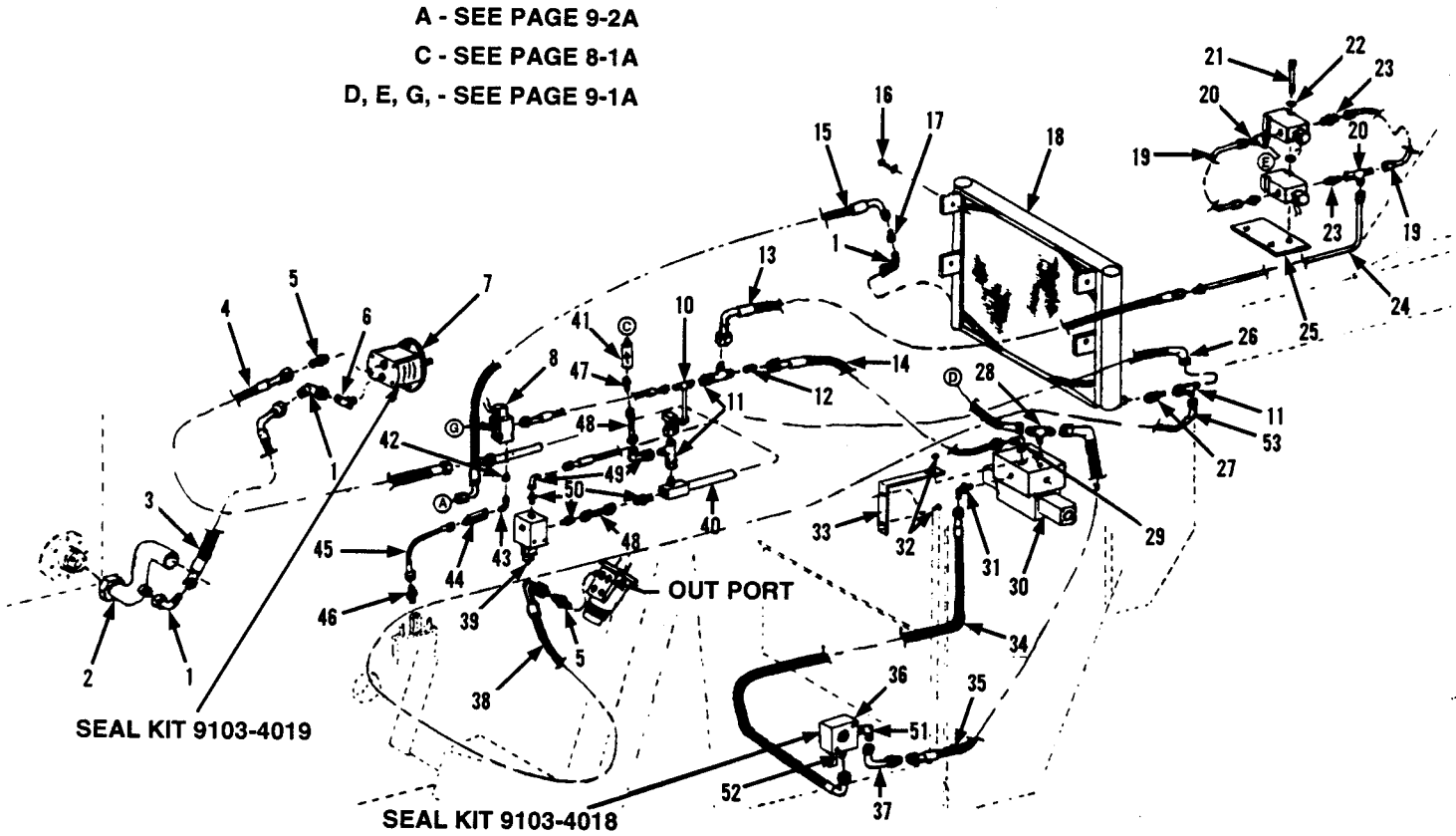

** Changed the page number from 9-10A to 9-10.*

HYDRAULICS-OIL COOLER and PILOT PUMP

Starting Serial No. 8444491
Thru Serial No. 8744114G
Excluding Serial No. 8744079g
Perkins Engine Only
Original Issue 2-85
Revised 7-16-99

Item	Part No.	Qty.	Description Of Part
1	8866-2108	3	ELBOW - 90 DEGREES (swivel nut)
2	9041-0298	1	ELBOW
3	8471-6985	1	HOSE ASSY
4	9103-3082	1	HOSE ASSY
5	8866-2024	2	CONNECTOR (includes o-ring)
	8859-1206	2	O-RING
6	8866-2067	1	ELBOW - 90 DEGREES (includdes o-ring)
	8859-1207	1	O-RING
7	9103-3122	1	PILOT PUMP
	8667-1112	1	GASKET
8	9020-6739	1	SOLENOID VALVE
9	8471-7468	1	HOSE ASSY
10	9103-3073	1	TUBE ASSY
	9103-3138	AR	CLAMP
	7713-3498	1	COVER PLATE
	7713-3499	AR	HEX HD CAPSCREW
11	8866-2240	3	SWIVEL NUT RUN TEE, 1/2 TUBE
12	9103-3100	1	INLINE STRAINER
13	8471-7463	1	HIGH PRESSURE HOSE
14	7713-3147	1	HOSE ASSY
15	9020-7398	1	HIGH PRESSURE HOSE
16	8820-1031	4	HEX HD CAPSCREW, 3/8-16X1/2, GR5
	8855-1011	4	LOCKWASHER, 3/8
	8856-1109	4	FLAT WASHER, 3/8
17	8692-3006	1	CONNECTOR
18	9103-3050	1	OIL COOLER
	8452-1056	1	DRAIN
19	9020-7666	2	TUBE LINE
20	8866-2239	2	SWIVEL NUT RUN TEE, 3/8 TUBE
21	8820-1008	2	HEX HD CAPSCREW, 1/4-20X1-3/4, GR5
22	8856-1107	4	FLAT WASHER, 1/4
23	9002-9915	4	CONNECTOR
24	9020-7713	1	TUBE ASSY

Item	Part No.	Qty.	Description Of Part
25	9020-7693	1	MOUNTING PLATE
26	8471-7461	1	HOSE ASSY
27	8366-2107	1	TUBE ASSY
28	8866-2224	1	SWIVEL NUT BRANCH TEE, 3/8 TUBE
29	7713-1088	1	CONNECTOR
30	9103-3097	1	DIRECTINAL CONTROL VALVE
31	9002-8499	1	CONNECTOR
32	8820-1005	6	HEX HD CAPSCREW, 1/4-20X1, GR5
	8850-1004	4	HEX NUT, 1/4-20
33	9103-1086	2	MOUNTING BRACKET
34	7713-3342	1	HIGH PRESSURE HOSE
35	8471-7466	1	HOSE ASSY
36	9103-3096	1	INCHING VALVE
37	9103-3130	1	TUBE LINE
38	8471-7521	1	HOSE ASSY
39	9103-3128	1	RELIEF VALVE
40	9103-3075	1	TUBE ASSY
	7713-3035	AR	CLAMP
	7713-3052	1	COVER PLATE
	7713-3209	AR	HEX HD CAPSCREW
41	8366-3087	1	CHECK VALVE
42	8871-1381	1	REDUCING BUSHING, 3/8X1/4
43	8874-3042	1	MALE ELBOW, 90 DEGREES, 1/4X516 TUBE
44	8343-1005	1	ORIFICE CHECK VALCE
45	8471-6238	1	HOSE ASSY
46	8874-3036	1	MALE ELBOW, 45 DEGREES, 1/8X5/16 TUBE
47	8866-2006	1	CONNECTOR (includes o-ring)
	8859-1205	1	O-RING
48	9060-2566	2	TUBE LINE
49	8866-2106	2	ELBOW - 90 DEGREES (swivel nut)
50	8874-3003	3	MALE ADAPTER, 3/8X1/2 TUBE
51	8319-3008	1	METRIC ELBOW
52	8319-3009	1	METRIC ADAPTER
53	8866-2106	1	ELBOW - 90 DEGREES (swivel nut)

HYDRAULICS-OIL COOLER and PILOT PUMP

Starting Serial No. 0144259J
Original Issue 3-88
Revised 7-16-99

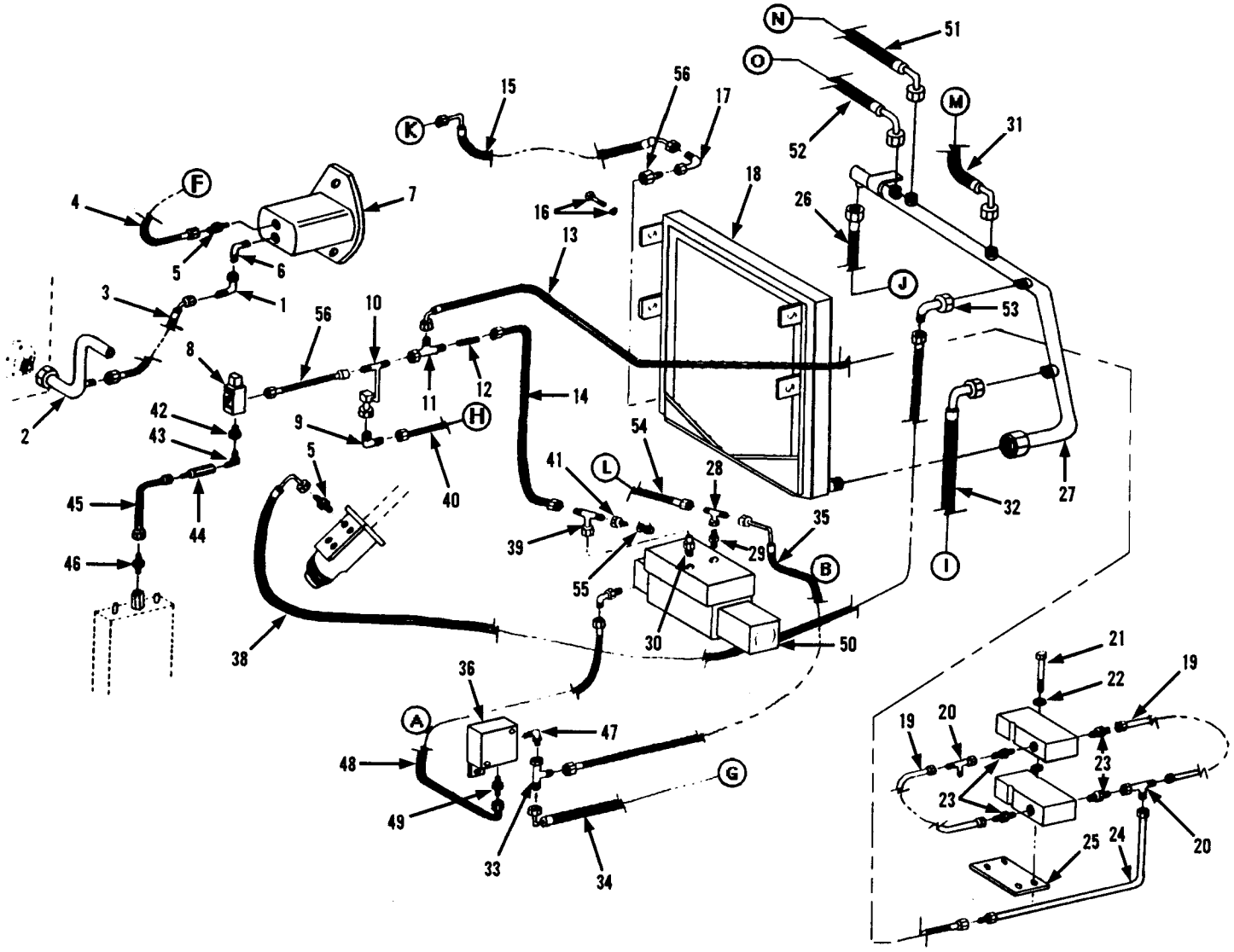

** Changed the page number from 9-10A to 9-10.*

HYDRAULICS-OIL COOLER and PILOT PUMP

Starting Serial No. 0144259J
Original Issue 3-88
Revised 7-16-99

Item	Part No.	Qty.	Description Of Part
1	8866-2108	1	ELBOW - 90 DEGREES (swivel nut)
2	9103-3257	1	ELBOW
3	7713-3875	1	HOSE ASSY
4	8471-6251	1	HOSE ASSY
5	8866-2024	2	CONNECTOR (includes o-ring)
	8859-1206	2	O-RING
6	8866-2067	1	ELBOW - 90 DEGREES (includes
	8859-1207	1	o-ring)
7	9103-3122	1	PILOT PUMP (see page 10-15A for details)
8	9020-6739	1	SOLENOID VALVE (see page 10-11 for details)
9	8866-1206	1	UNION ELBOW, 90 DEGREES
10	9103-3073	1	TUBE ASSY
11	8866-2240	1	SWIVEL NUT RUN TEE, 1/2 TUBE
12	9103-3100	1	INLINE STRAINER
13	8471-7463	1	HOSE ASSY
14	7713-3147	1	HOSE ASSY
15	9020-7398	1	HOSE ASSY
16	8820-1031	4	HEX HD CAPSCREW, 3/8-16X1/2, GR5
	8855-1011	4	LOCK WASHER, 3/8
	8856-1109	4	FLAT WASHER, 3/8
17	8866-2107	1	ELBOW - 90 DEGREES (swivel nut)
18	9103-3050	1	OIL COOLER
19	9020-7666	2	TUBE LINE
20	8866-2239	2	SWIVEL NUT RUN TEE, 3/8 TUBE
21	8820-1008	2	HEX HD CAPSCREW, 1/4-20X1-3/4, GR5
22	8856-1107	2	FLAT WASHER, 1/4
23	9002-9915	4	CONNECTOR
24	9020-7713	1	TUBE ASSY
25	9020-7693	1	MOUNTING PLATE
26	8471-7489	1	HOSE ASSY
27	9104-3145	1	DRAIN MANIFOLD

Item	Part No.	Qty.	Description Of Part
28	8866-2224	1	SWIVEL NUT BRANCH TEE, 3/8 TUBE
29	8866-2005	1	CONNECTOR (includes o-ring)
	8859-1204	1	O-RING
30	8866-2026	1	CONNECTOR (includes o-ring)
	8859-1204	1	O-RING
31	8471-7577	1	HOSE ASSY
32	8471-7518	1	HOSE ASSY
33	8866-2239	1	SWIVEL NUT RUN TEE, 3/8 TUBE
34	9020-7411	1	HOSE ASSY
35	8471-7466	1	HOSE ASSY
36	9103-3096	1	INCHING VALVE
38	8471-7521	1	HOSE ASSY
39	8866-2225	1	SWIVEL NUT BRANCH TEE, 1/2 TUBE
40	8471-7413	1	HOSE ASSY
41	7724-1003	1	ADAPTER
42	8871-1381	1	REDUCING BUSHING, 3/8X1/4
43	8874-3042	1	MALE ELBOW - 90 DEGREES, 1/4X5/16 TUBE
44	8343-1005	1	ORIFICE CHECK VALVE
45	8471-6238	1	HOSE ASSY
46	8874-3036	1	MALE ELBOW - 45 DEGREES, 1/8X5/16 TUBE
47	8866-2064	1	ELBOW - 90 DEGREES (includes
	8859-1204		o-ring)
48	7713-3342	1	HOSE ASSY
49	8866-2005	1	CONNECTOR (includes o-ring)
	8859-1204	1	O-RING
50	9103-3097	1	DIRECTIONAL CONTROL VALVE (see pg 10-19 for details)
51	7713-3167	1	HOSE ASSY
52	8471-7577	1	HOSE ASSY
53	8866-2106	1	ELBOW - 90 DEGREES (swivel nut)
54	8471-7520	1	HOSE ASSY
55	9103-3032	1	MINI CHECK (Stauff)
56	8471-7468	1	HOSE ASSY

A - SEE PAGE 9-13
B - SEE PAGE 9-13
F - SEE PAGE 9-14
G - SEE PAGE 9-13
H - SEE PAGE 9-14
I - SEE PAGE 9-14
J - SEE PAGE 9-14
K - SEE PAGE 9-2A
L, M, N, O - SEE PAGE 9-1A

** Changed the page number from 9-10A to 9-10.*

HYDRAULICS-OIL COOLER and PILOT PUMP

Starting Serial No. 8744115G
Also Machine S/N 8744079G
Original Issue 4-87
Revised 7-16-99

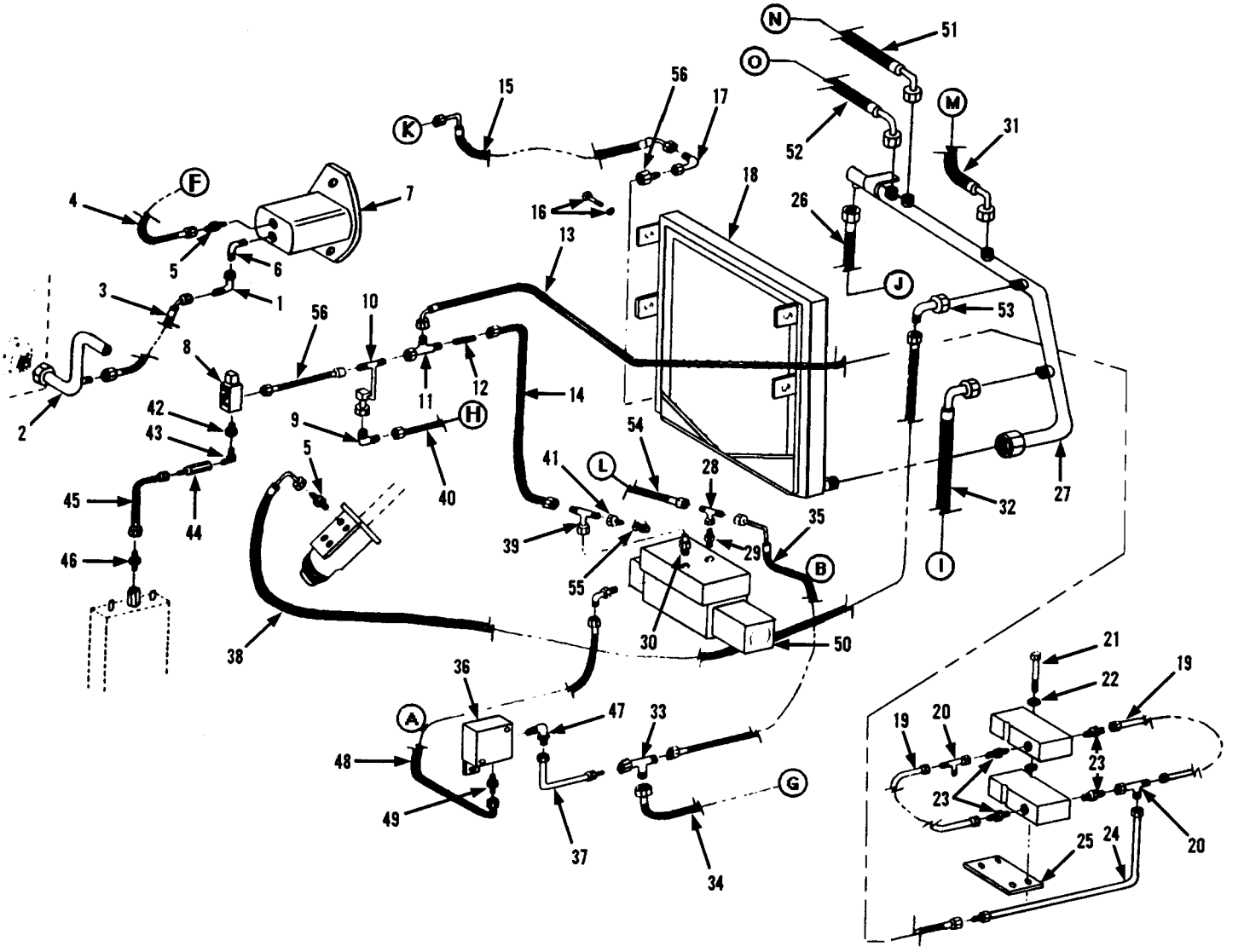

HYDRAULICS-OIL COOLER and PILOT PUMP

Starting Serial No. 8744115G
Also Machine S/N 8744079G
Original Issue 4-87
Revised 7-16-99

Item	Part No.	Qty.	Description Of Part
1	8866-2108	1	ELBOW - 90 DEGREES (swivel nut)
2	9103-3257	1	ELBOW
3	7713-3875	1	HOSE ASSY
4	8471-6251	1	HOSE ASSY
5	8866-2024	2	CONNECTOR (includes o-ring)
	8859-1206	2	O-RING
6	8866-2067	1	ELBOW - 90 DEGREES (includes
	8859-1207	1	o-ring)
7	9103-3122	1	PILOT PUMP (see page 10-15A for details)
8	9020-6739	1	SOLENOID VALVE (see page 10-11 for details)
9	8866-1206	1	UNION ELBOW, 90 DEGREES
10	9103-3073	1	TUBE ASSY
11	8866-2240	1	SWIVEL NUT RUN TEE, 1/2 TUBE
12	9103-3100	1	INLINE STRAINER
13	8471-7463	1	HOSE ASSY
14	7713-3147	1	HOSE ASSY
15	9020-7398	1	HOSE ASSY
16	8820-1031	4	HEX HD CAPSCREW, 3/8-16X1/2, GR5
	8855-1011	4	LOCK WASHER, 3/8
	8856-1109	4	FLAT WASHER, 3/8
17	8866-2107	1	ELBOW - 90 DEGREES (swivel nut)
18	9103-3050	1	OIL COOLER
19	9020-7666	2	TUBE LINE
20	8866-2239	2	SWIVEL NUT RUN TEE, 3/8 TUBE
21	8820-1008	2	HEX HD CAPSCREW, 1/4-20X1-3/4, GR5
22	8856-1107	2	FLAT WASHER, 1/4
23	9002-9915	4	CONNECTOR
24	9020-7713	1	TUBE ASSY
25	9020-7693	1	MOUNTING PLATE
26	8471-7489	1	HOSE ASSY
27	9104-3145	1	DRAIN MANIFOLD
28	8866-2224	1	SWIVEL NUT BRANCH TEE, 3/8 TUBE

Item	Part No.	Qty.	Description Of Part
29	8866-2005	1	CONNECTOR (includes o-ring)
	8859-1204	1	O-RING
30	8866-2026	1	CONNECTOR (includes o-ring)
	8859-1204	1	O-RING
31	8471-7577	1	HOSE ASSY
32	8471-7518	1	HOSE ASSY
33	8866-2239	1	SWIVEL NUT RUN TEE, 3/8 TUBE
34	9020-7411	1	HOSE ASSY
35	8471-7466	1	HOSE ASSY
36	9103-3096	1	INCHING VALVE
37	9103-3130	1	TUBE LINE
38	8471-7521	1	HOSE ASSY
39	8866-2225	1	SWIVEL NUT BRANCH TEE, 1/2 TUBE
40	8471-7413	1	HOSE ASSY
41	7724-1003	1	ADAPTER
42	8871-1381	1	REDUCING BUSHING, 3/8X1/4
43	8874-3042	1	MALE ELBOW - 90 DEGREES, 1/4X5/16 TUBE
44	8343-1005	1	ORIFICE CHECK VALVE
45	8471-6238	1	HOSE ASSY
46	8874-3036	1	MALE ELBOW - 45 DEGREES, 1/8X5/16 TUBE
47	8866-2064	1	ELBOW - 90 DEGREES (includes
	8859-1204		o-ring)
48	7713-3342	1	HOSE ASSY
49	8866-2005	1	CONNECTOR (includes o-ring)
	8859-1204	1	O-RING
50	9103-3097	1	DIRECTIONAL CONTROL VALVE (see pg 10-19 for details)
51	7713-3167	1	HOSE ASSY
52	8471-7577	1	HOSE ASSY
53	8866-2106	1	ELBOW - 90 DEGREES (swivel nut)
54	8471-7520	1	HOSE ASSY
55	9103-3032	1	MINI CHECK (Stauff)
56	8471-7468	1	HOSE ASSY

A - SEE PAGE 9-13
B - SEE PAGE 9-13
F - SEE PAGE 9-14
G - SEE PAGE 9-13
H - SEE PAGE 9-14
I - SEE PAGE 9-14
J - SEE PAGE 9-14
K - SEE PAGE 9-2A
L, M, N, O - SEE PAGE 9-1A

** Changed the page number from 9-10A to 9-10.*

HYDRAULICS-OIL COOLER and PILOT PUMP

Starting Serial No. 0144452
Original Issue 1-89
Revised 7-16-99

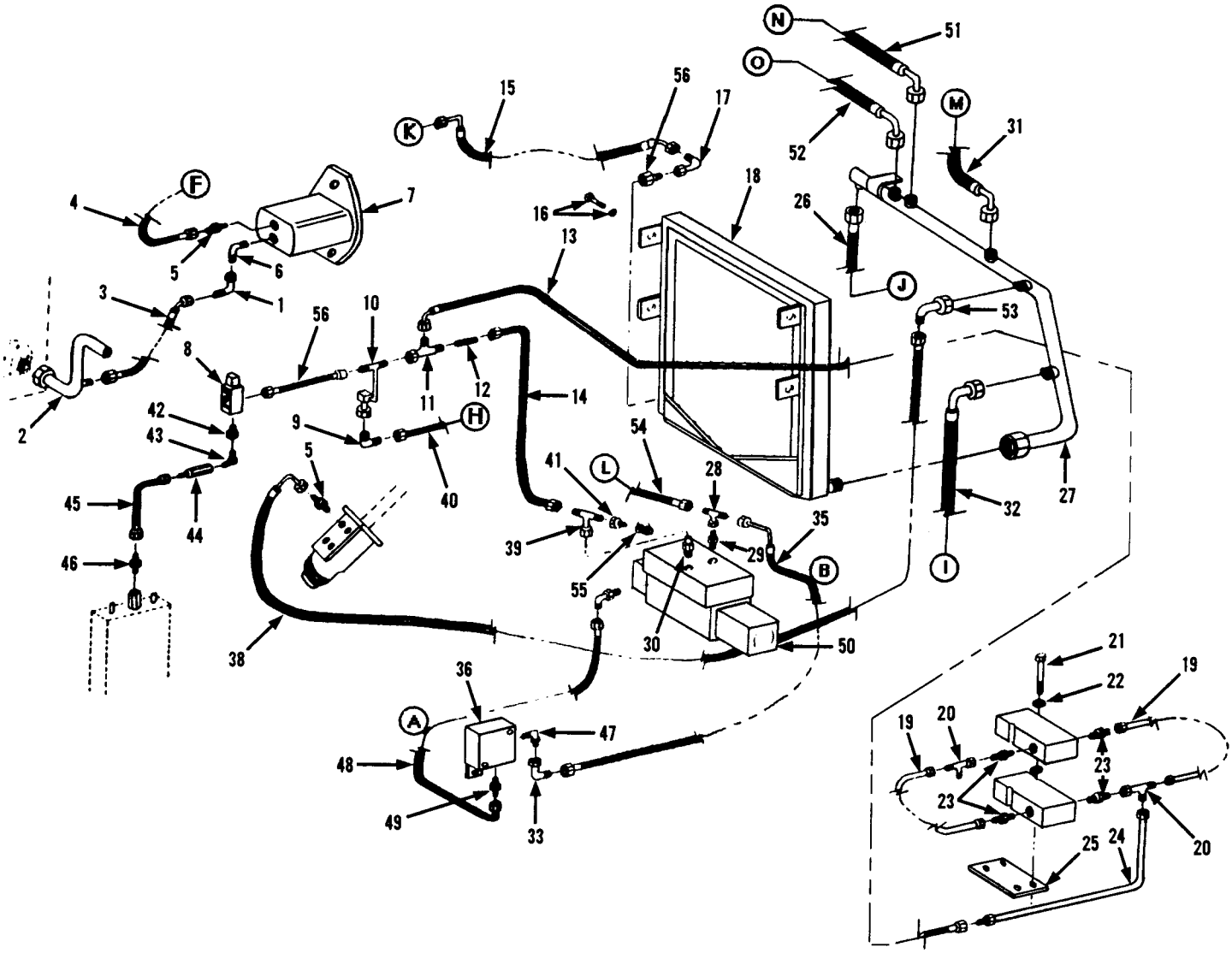

** Changed the page number from 9-10A to 9-10.*

HYDRAULICS-OIL COOLER and PILOT PUMP

Starting Serial No. 0144452
Original Issue 1-89
Revised 7-16-99

Item	Part No.	Qty.	Description Of Part
1	8866-2108	1	ELBOW - 90 DEGREES (swivel nut)
2	9103-3257	1	ELBOW
3	7713-3875	1	HOSE ASSY
4	8471-6251	1	HOSE ASSY
5	8866-2024	2	CONNECTOR (includes o-ring)
	8859-1206	2	O-RING
6	8866-2067	1	ELBOW - 90 DEGREES (includes
	8859-1207	1	o-ring)
7	9103-3122	1	PILOT PUMP (see page 10-15A for details)
8	9020-6739	1	SOLENOID VALVE (see page 10-11 for details)
9	8866-1206	1	UNION ELBOW, 90 DEGREES
10	9103-3073	1	TUBE ASSY
11	8866-2240	1	SWIVEL NUT RUN TEE, 1/2 TUBE
12	9103-3100	1	INLINE STRAINER
13	8471-7463	1	HOSE ASSY
14	7713-3147	1	HOSE ASSY
15	8471-7797	1	HOSE ASSY
16	8820-1031	4	HEX HD CAPSCREW, 3/8-16X1/2, GR5
	8855-1011	4	LOCK WASHER, 3/8
	8856-1109	4	FLAT WASHER, 3/8
17	8866-2107	1	ELBOW - 90 DEGREES (swivel nut)
18	9103-3050	1	OIL COOLER
19	9020-7666	2	TUBE LINE
20	8866-2239	2	SWIVEL NUT RUN TEE, 3/8 TUBE
21	8820-1008	2	HEX HD CAPSCREW, 1/4-20X1-3/4, GR5
22	8856-1107	2	FLAT WASHER, 1/4
23	8866-1009	4	FITTING
24	9020-7713	1	TUBE ASSY
25	9020-7693	1	MOUNTING PLATE
26	8471-7489	1	HOSE ASSY
27	9104-3145	1	DRAIN MANIFOLD
28	8866-2224	1	SWIVEL NUT BRANCH TEE, 3/8 TUBE

Item	Part No.	Qty.	Description Of Part
29	8866-2005	1	CONNECTOR (includes o-ring)
	8859-1204	1	O-RING
30	8866-2026	1	CONNECTOR (includes o-ring)
	8859-1204	1	O-RING
31	8471-7577	1	HOSE ASSY
32	8471-7518	1	HOSE ASSY
33	8866-2105	1	ELBOW - 90 DEGREES (swivel nut)
34	8471-7468	1	HOSE ASSY
35	8471-7466	1	HOSE ASSY
36	9103-3096	1	INCHING VALVE
38	8471-7521	1	HOSE ASSY
39	8866-2225	1	SWIVEL NUT BRANCH TEE, 1/2 TUBE
40	8471-7413	1	HOSE ASSY
41	7724-1003	1	ADAPTER
42	8871-1381	1	REDUCING BUSHING, 3/8X1/4
43	8874-3042	1	MALE ELBOW - 90 DEGREES, 1/4X5/16 TUBE
44	8343-1005	1	ORIFICE CHECK VALVE
45	8471-6238	1	HOSE ASSY
46	8874-3036	1	MALE ELBOW - 45 DEGREES, 1/8X5/16 TUBE
47	8866-2064	1	ELBOW - 90 DEGREES (includes
	8859-1204		o-ring)
48	7713-3342	1	HOSE ASSY
49	8866-2005	1	CONNECTOR (includes o-ring)
	8859-1204	1	O-RING
50	9103-3097	1	DIRECTIONAL CONTROL VALVE (see pg 10-19 for details)
51	7713-3167	1	HOSE ASSY
52	8471-7577	1	HOSE ASSY
53	8866-2106	1	ELBOW - 90 DEGREES (swivel nut)
54	8471-7520	1	HOSE ASSY
55	9103-3032	1	MINI CHECK (Stauff)

L, M, N, O - SEE PAGE 9-1A
K - SEE PAGE 9-2A
F, H, I, J - SEE PAGE 9-14

** Changed the page number from 9-10A to 9-10.*

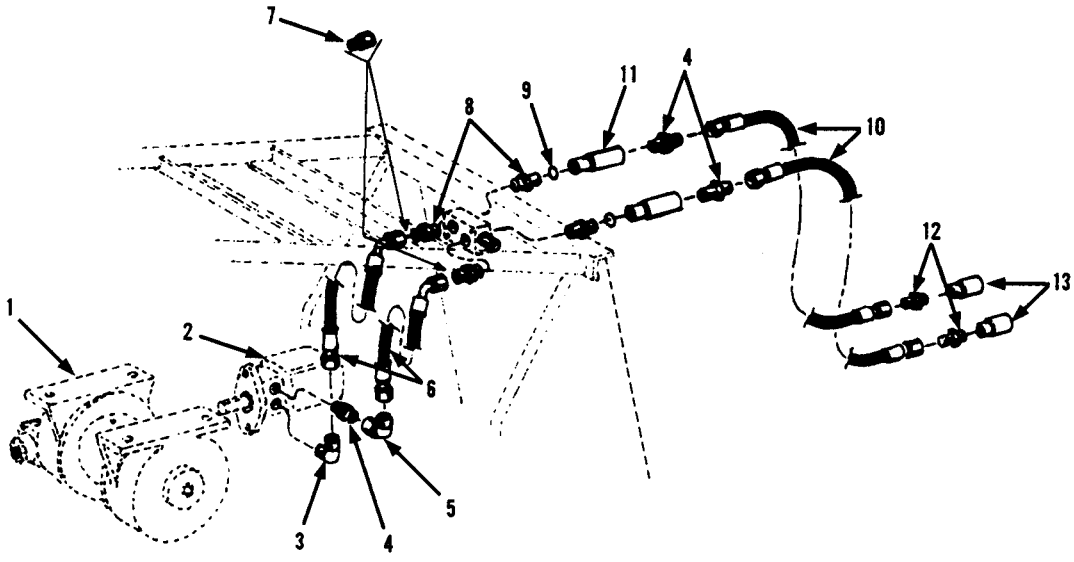

Item	Part No.	Qty.	Description Of Part
1	9020-7878	1	WINCH
2	9020-7879	1	WINCH MOTOR
3	8866-2059	1	ELBOW - 90 DEGREES (includes o-ring)
	8859-1206	1	O-RING
4	8866-2019	3	CONNECTOR (includes o-ring)
	8859-1206	3	O-RING
5	8866-2106	1	ELBOW - 90 DEGREES (swivel nut)
6	9020-5121	2	HIGH PRESSURE HOSE
7	9002-9935	2	REDUCER
8	8345-1104	4	STRAIGHT ADAPTER
9	9002-3116	2	O-RING
10	9002-2042	2	HIGH PRESSURE HOSE
11	9020-7880	2	FLOW LIMITER
12	8874-3016	2	MALE ADAPTER, 1/2X1/2 TUBE
13	9020-4245	2	QUICK DISCONNECT (female)

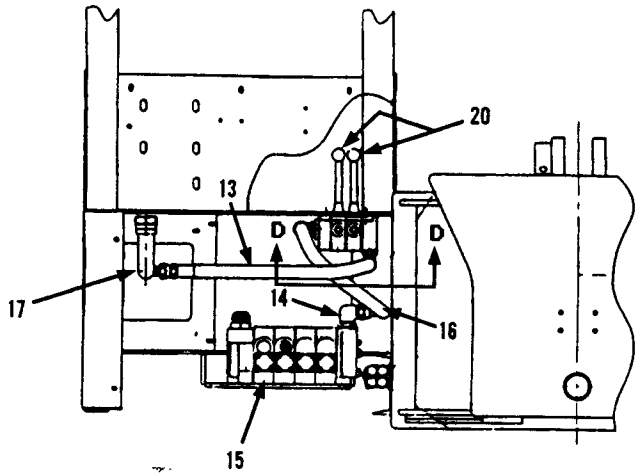

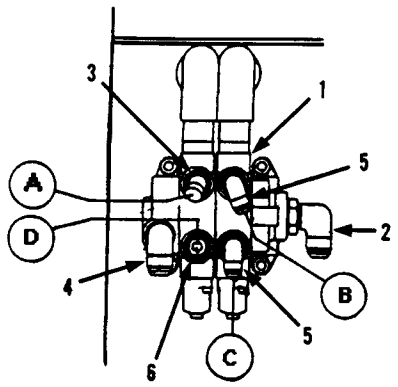

VIEW D-D

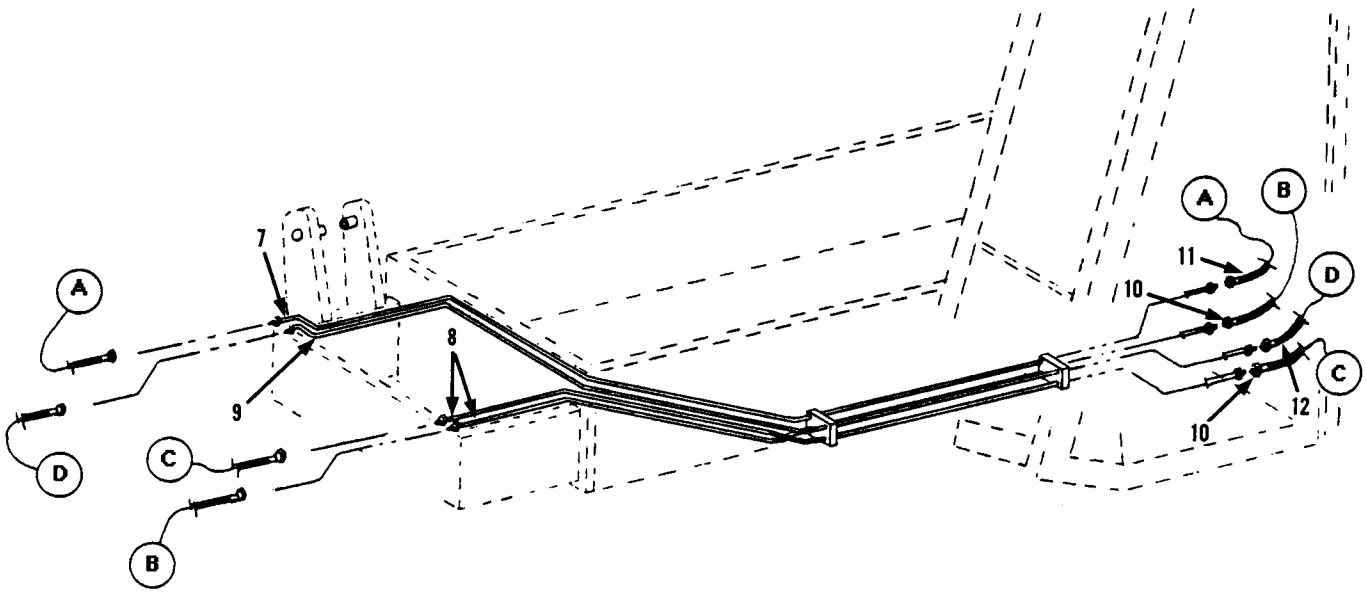

SEE PAGE 4-5

Item	Part No.	Qty.	Description Of Part
	9103-5090	1	VALVE ASSY (consists of items 1 thru 6)
1	9103-3144	1	VALVE
2	8866-2067	1	ELBOW - 90 DEGREES (includes o-ring)
	8859-1207	1	O-RING
3	8866-2085	1	ELBOW - 45 DEGREES (includes o-ring)
	8859-1205	1	O-RING
4	8866-2060	1	ELBOW - 90 DEGREES (includes o-ring)
	8859-1206	1	O-RING
5	8866-2065	2	ELBOW - 90 DEGREES (includes o-ring)
	8859-1205	2	O-RING
6	8866-2036	1	CONNECTOR (includes o-ring)
	8859-1205	1	O-RING
7	9103-3141	1	TUBE ASSY

Item	Part No.	Qty.	Description Of Part
8	9103-3140	2	TUBE ASSY
9	9103-3198	1	TUBE ASSY
10	8471-7477	2	HOSE ASSY
11	8471-7477	1	HOSE ASSY
12	8471-7477	1	HOSE ASSY
13	8471-7473	1	HOSE ASSY
14	8866-2061	1	ELBOW - 90 DEGREES (includes o-ring)
	8859-1209	1	O-RING
15	9103-3168	1	MAIN HYDRAULIC VALVE
16	8471-7474	1	HOSE ASSY
17	9103-3142	1	TUBE ASSY
18	9103-5091	AR	RETROFIT KIT (S/N 8544556 thru 8544615)
19	9103-5092	AR	RETROFIT KIT (S/N 8544519, 8544612, & 8544616 thru 8544624)
20	9103-4097	2	PLASTIC KNOB (brass insert)

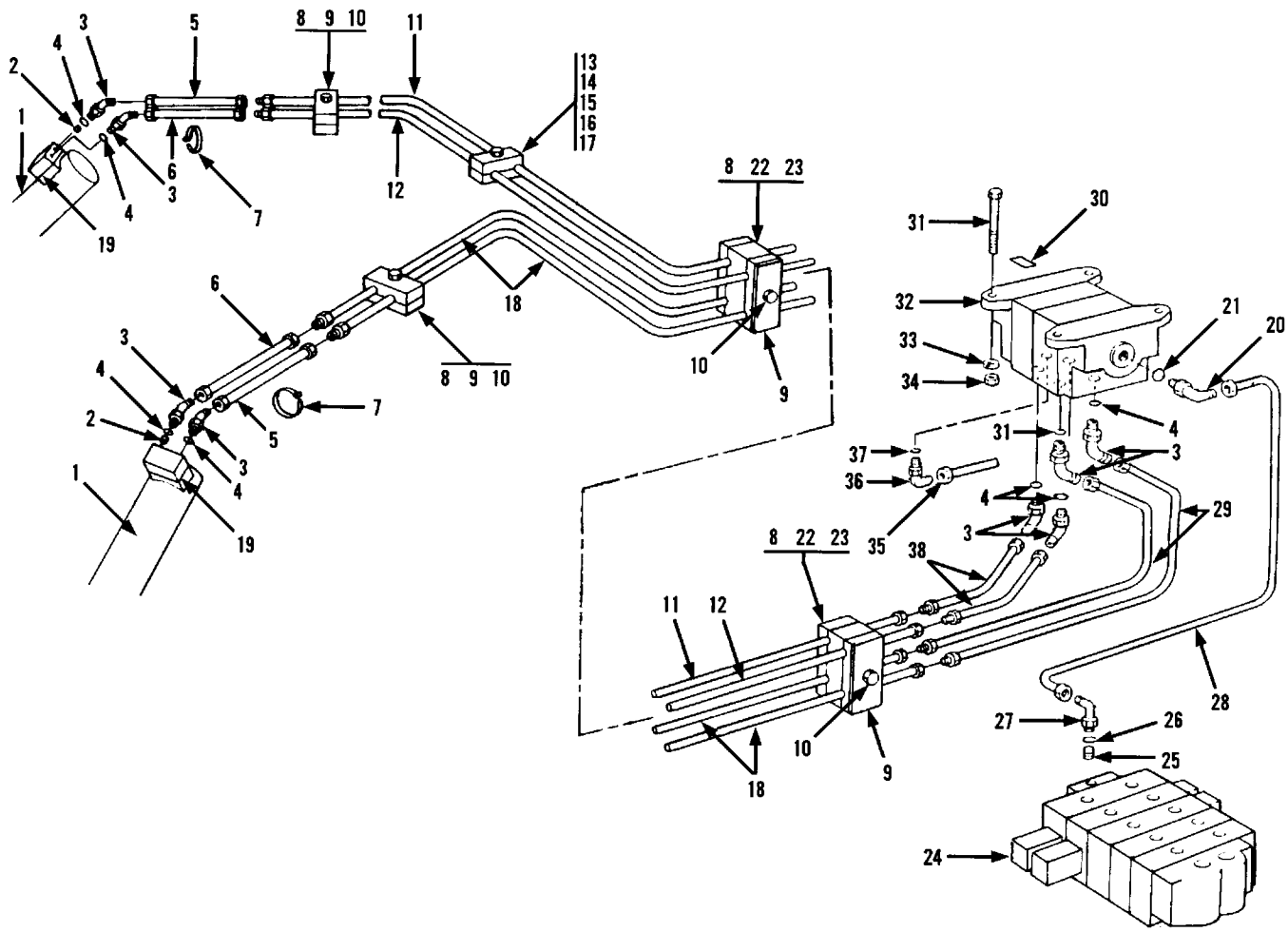

Item	Part No.	Qty.	Description Of Part
* 1		Ref	OUTRIGGER CYLINDER ASSY, (see page 13-11 for details)
2	9103-3201	2	ORIFICE CHECK
* 3	8866-2085	8	ELBOW, 45 DEGREES, (includes item 4)
* 4	8859-1205	8	O-RING
5	8471-7527	2	HOSE ASSY
6	8471-7528	2	HOSE ASSY
7	9002-7187	4	NYLON CLAMP
* 8	7716-3168	6	CLAMP SET
* 9	7713-3140	4	COVER PLATE
*10	7713-3177	4	HEX HD CAPSCREW
11	9103-3141	1	TUBE ASSY
12	9103-3198	1	TUBE ASSY
13	7713-3499	2	HEX HD CAPSCREW
14	7713-3498	1	COVER PLATE
15	9103-3138	2	CLAMP
16	9103-3199	1	SAFETY PLATE
17	9103-3200	2	STACKING BOLT
18	9103-3140	2	TUBE ASSY
*19		Ref	DUAL P.O. CHECK VALVE, (see page 10-24 for details)
*20	8866-2067	1	ELBOW, 90 DEGREES, (includes item 21)

Item	Part No.	Qty.	Description Of Part
*21	8859-1207	1	O-RING
22	7713-3390	2	SAFETY CLIP
23	7713-3389	2	STACK BOLT
*24		Ref	MAIN CONTROL VALVE ASSY, (see page 10-27 for details)
25	8871-1284	1	HEX SOCKET PIPE PLUG, 3/4
26	8859-1209	1	O-RING
27	8866-2061	1	ELBOW, 90 DEGREES, (includes item 26)
28	8471-7474	1	HOSE ASSY
29	8471-7479	2	HOSE ASSY
*30	9102-3006	1	STABILIZER DECAL
*31	8820-1037	4	HEX HD CAPSCREW, 3/8-16X1-1/2, GR5
*32		Ref	OUTRIGGER VALVE ASSY, (see page 10-23 for details)
*33	8855-1011	4	LOCKWASHER, 3/8
*34	8850-1006	4	HEX NUT, 3/8-16
35	8471-7473	1	HOSE ASSY
36	8866-2060	1	ELBOW, 90 DEGREES, (includes item 37)
37	8859-1206	1	O-RING
38	8471-7477	2	HOSE ASSY

** Revised illustration, reference note on items 1 & 24, quantity on items 3, 4, 8, 9 & 10 and description on items 19 thru 21, 30, 31, 33 & 34; added item 32.*

HYDRAULICS & PARKING BRAKE LINES

Starting Serial No. 8744115G
Also Machine S/N 8744079g
Original Issue 4-87
Revised 7-16-99

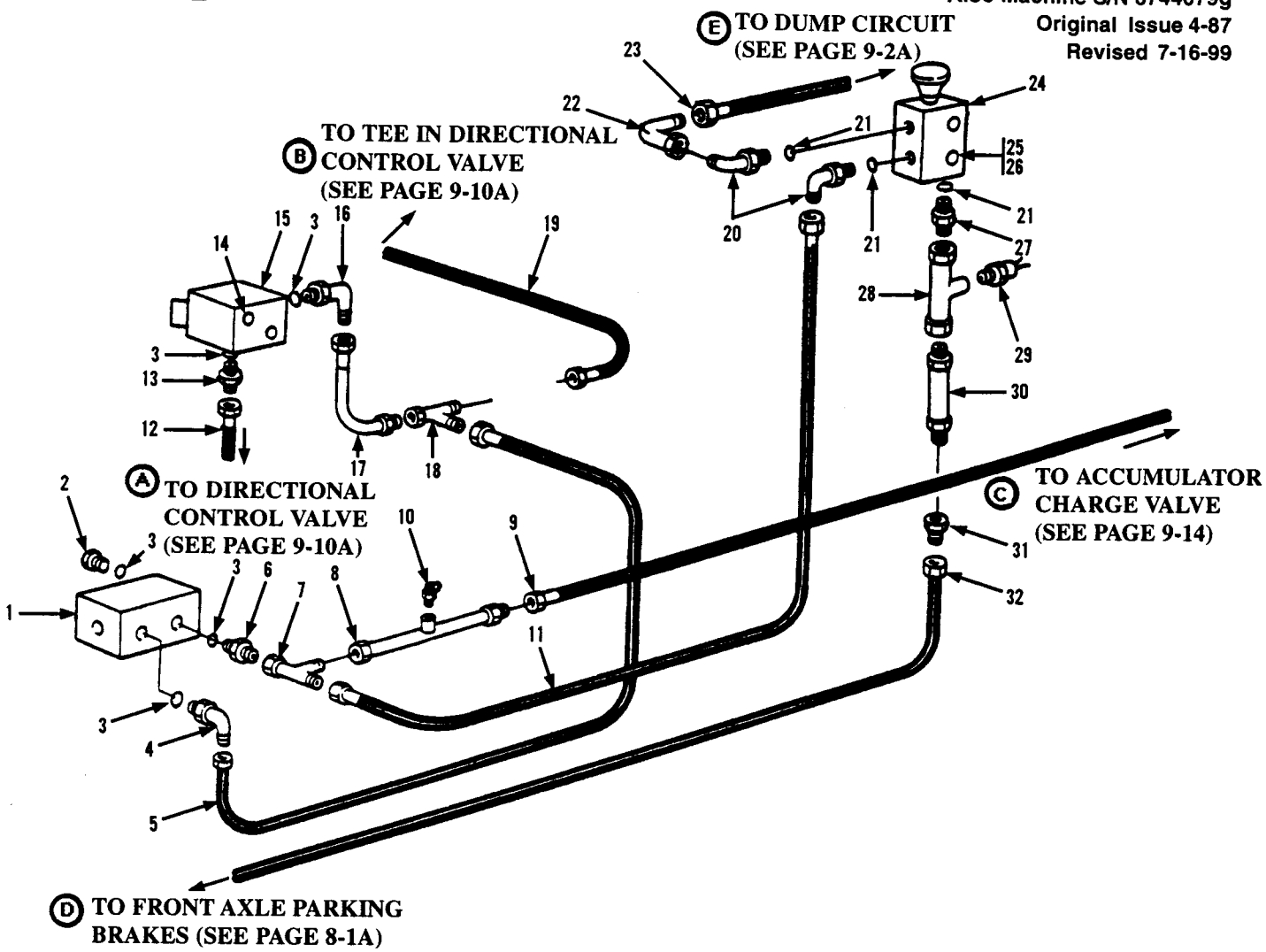

Item	Part No.	Qty.	Description Of Part
1		Ref	BRAKE VALVE ASSY (see page 10-21 for details)
2	8866-2174	1	HEX HD PLUG (includes item 3)
3	8859-1204	5	O-RING
4	8866-2064	1	ELBOW - 90 DEGREES (includes item 3)
5	7713-3447	1	HOSE ASSY
6	8866-2005	1	CONNECTOR (includes item 3)
7	8866-2239	1	SWIVEL NUT RUN TEE, 3/8 TUBE
8	9104-3163	1	TUBE ASSY
9		Ref	HOSE ASSY (see page 9-14 for details)
10	7713-3089	1	MINI-CHECK COUPLING
11	8471-7508	1	HOSE ASSY
12	7713-3342	1	HOSE ASSY
13	8866-2005	1	CONNECTOR (includes item 3)
14	8821-2228	2	SOCKET HD CAPSCREW, 5/16-18X1-1/4, GR8
15	9103-3096	1	INCHING VALVE ASSY
	9103-4018	1	VALVE SEAL KIT
16	8866-2064	1	ELBOW - 90 DEGREES (includes item 3)

Item	Part No.	Qty.	Description Of Part
17	9103-3130	1	TUBE ASSY
18	8866-2239	1	SWIVEL NUT RUN TEE, 3/8 TUBE
19	8471-7466	1	HOSE ASSY
20	8866-2065	2	ELBOW - 90 DEGREES (includes item 21)
21	8859-1205	3	O-RING
22	8866-2105	1	ELBOW - 90 DEGREES (swivel nut)
23	7713-3167	1	HOSE ASSY
24		Ref	PARK BRAKE VALVE (see page 10-22 for details)
25	8826-1021	2	SOCKET BUTTON HD CAPSCREW, 5/16-18X5/8
26	8855-1010	2	LOCKWASHER, 5/16
27	8866-2018	1	CONNECTOR (includes item 21)
28	9104-3131	1	TUBE ASSY
29	9104-3077	1	PRESSURE SWITCH
30	9104-3143	1	CHECK VALVE
31	8866-1342	1	TUBE END REDUCER, 1/2X3/8
32		Ref	HOSE ASSY (see page 8-1B for details)

HYDRAULICS & PARKING BRAKE LINES

Starting Serial No. 8744115G
Also Machine S/N 8744079G
Original Issue 4-87
Revised 7-16-99

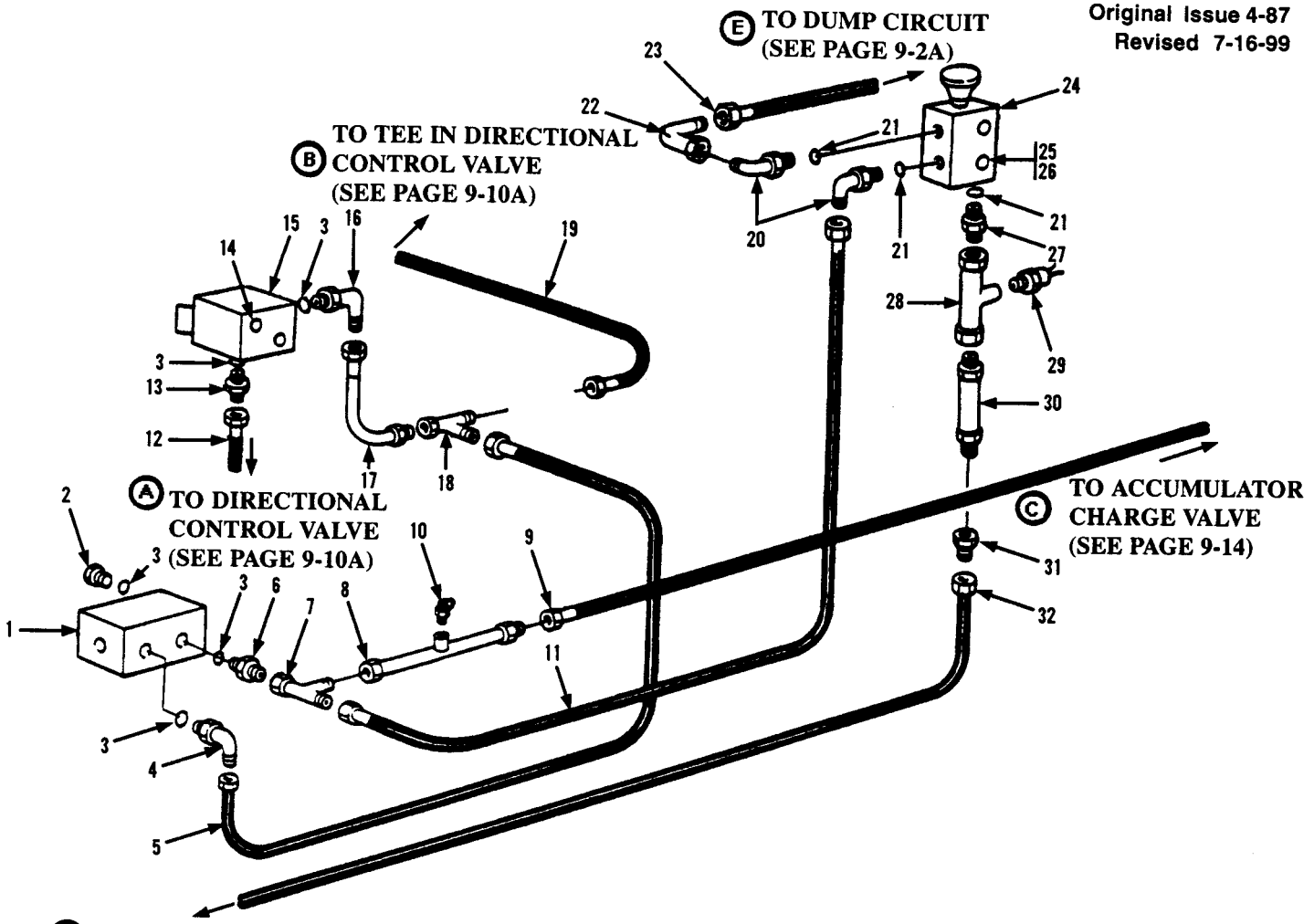

Item	Part No.	Qty.	Description Of Part
1		Ref	BRAKE VALVE ASSY (see page 10-21 for details)
2	8866-2174	1	HEX HD PLUG (includes item 3)
3	8859-1204	5	O-RING
4	8866-2064	1	ELBOW - 90 DEGREES (includes item 3)
5	9020-7411	1	HOSE ASSY
6	8866-2005	1	CONNECTOR (includes item 3)
7	8866-2239	1	SWIVEL NUT RUN TEE, 3/8 TUBE
8	9104-3163	1	TUBE ASSY
9		Ref	HOSE ASSY (see page 9-14 for details)
10	7713-3089	1	MINI-CHECK COUPLING
11	8471-7508	1	HOSE ASSY
12	7713-3342	1	HOSE ASSY
13	8866-2005	1	CONNECTOR (includes item 3)
14	8821-2228	2	SOCKET HD CAPSCREW, 5/16-18X1-1/4, GR8
15	9103-3096	1	INCHING VALVE ASSY
	9103-4018	1	VALVE SEAL KIT
16	8866-2064	1	ELBOW - 90 DEGREES (includes item 3)

Item	Part No.	Qty.	Description Of Part
17	9103-3130	1	TUBE ASSY
18	8866-2239	1	SWIVEL NUT RUN TEE, 3/8 TUBE
19	8471-7466	1	HOSE ASSY
20	8866-2065	2	ELBOW - 90 DEGREES (includes item 21)
21	8859-1205	3	O-RING
22	8866-2105	1	ELBOW - 90 DEGREES (swivel nut)
23	7713-3167	1	HOSE ASSY
24		Ref	PARK BRAKE VALVE (see page 10-22 for details)
25	8826-1021	2	SOCKET BUTTON HD CAPSCREW, 5/16-18X5/8
26	8855-1010	2	LOCKWASHER, 5/16
27	8866-2018	1	CONNECTOR (includes item 21)
28	9104-3131	1	TUBE ASSY
29	9104-3077	1	PRESSURE SWITCH
30	9104-3143	1	CHECK VALVE
31	8866-1342	1	TUBE END REDUCER, 1/2X3/8
32		Ref	HOSE ASSY (see page 8-1B for details)

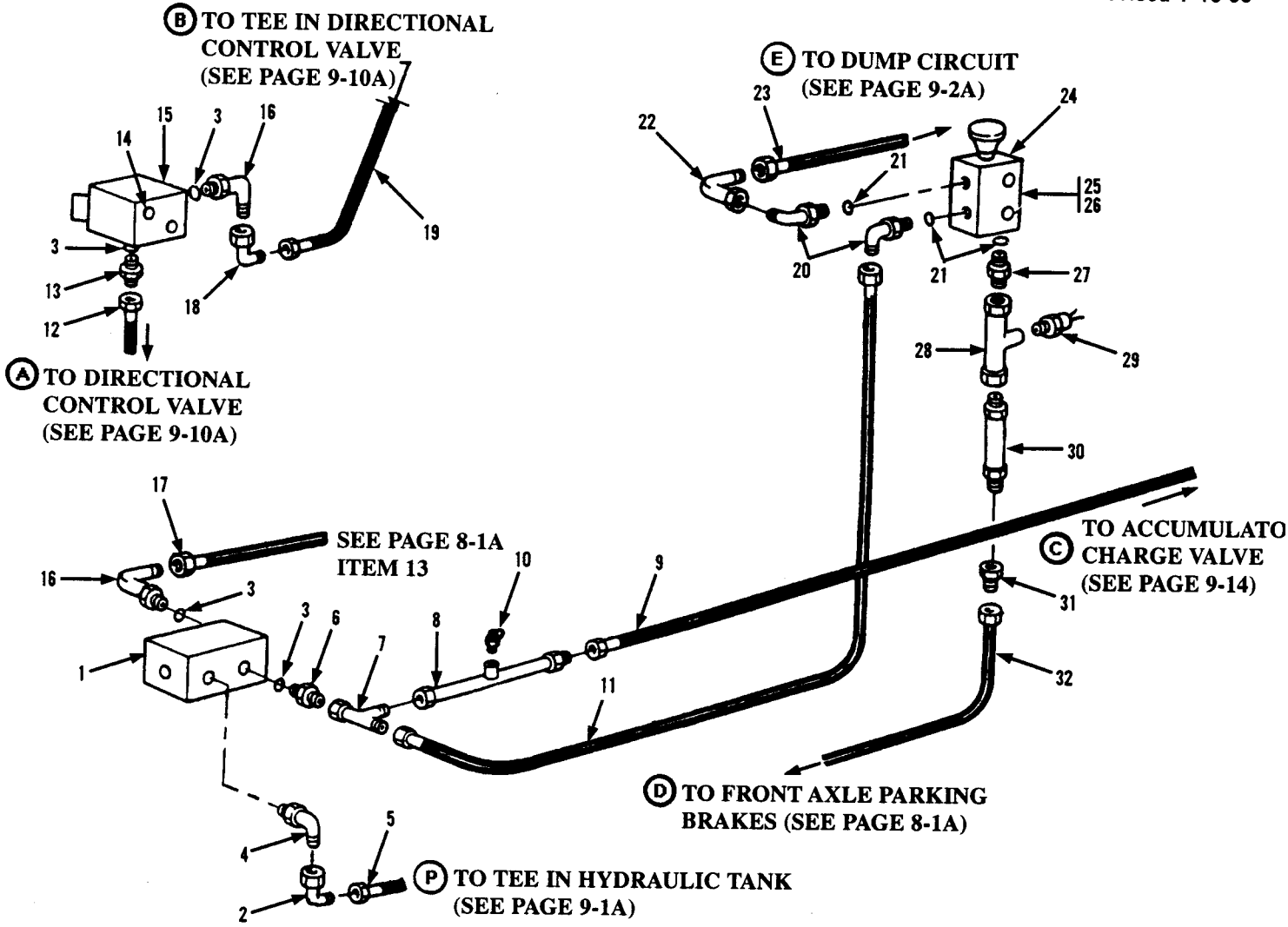

Item	Part No.	Qty.	Description Of Part
1	9103-3307	Ref	BRAKE VALVE ASSY (see page 10-21 for details)
2	8866-2106	1	ELBOW - 90 DEGREES (swivel nut)
3	8859-1204	5	O-RING
4	7713-1088	1	ELBOW - 90 DEGREES
5	9020-7842	1	HOSE ASSY
6	8866-2005	1	CONNECTOR (includes item 3)
7	8866-2239	1	SWIVEL NUT RUN TEE, 3/8 TUBE
8	9104-3163	1	TUBE ASSY
9	8471-7561	1	HOSE ASSY (see page 9-14)
10	7710-3089	1	MINI-CHECK COUPLING
11	8471-7508	1	HOSE ASSY
12	7713-3342	1	HOSE ASSY
13	8866-2005	1	CONNECTOR (includes item 3)
14	8821-2228	2	SOCKET HD CAPSCREW, 5/16-18X1-1/4, GR8
15	9103-3096	1	INCHING VALVE ASSY
	9103-4018	AR	VALVE SEAL KIT
16	8866-2064	1	ELBOW - 90 DEGREES (includes item 3)

Item	Part No.	Qty.	Description Of Part
17	8471-7523	1	HOSE ASSY
18	8866-2105	1	ELBOW - 90 DEGREES (swivel nut)
19	8471-7466	1	HOSE ASSY
20	8866-2065	2	ELBOW - 90 DEGREES (includes item 21)
21	8859-1205	3	O-RING
22	8866-2105	1	ELBOW - 90 DEGREES (swivel nut)
23	7713-3167	1	HOSE ASSY
24	9104-3090	Ref	PARK BRAKE VALVE (see page 10-22 for details)
25	8826-1021	2	SOCKET BUTTON HD CAPSCREW, 5/16-18X5/8
26	8855-1010	2	LOCKWASHER, 5/16
27	8866-2018	1	CONNECTOR (includes item 21)
28	9104-3131	1	TUBE ASSY
29	9104-3077	1	PRESSURE SWITCH
30	9104-3143	1	CHECK VALVE
31	8866-1342	1	TUBE END REDUCER, 1/2X3/8
32	8471-7522	Ref	HOSE ASSY (see page 8-1A for details)

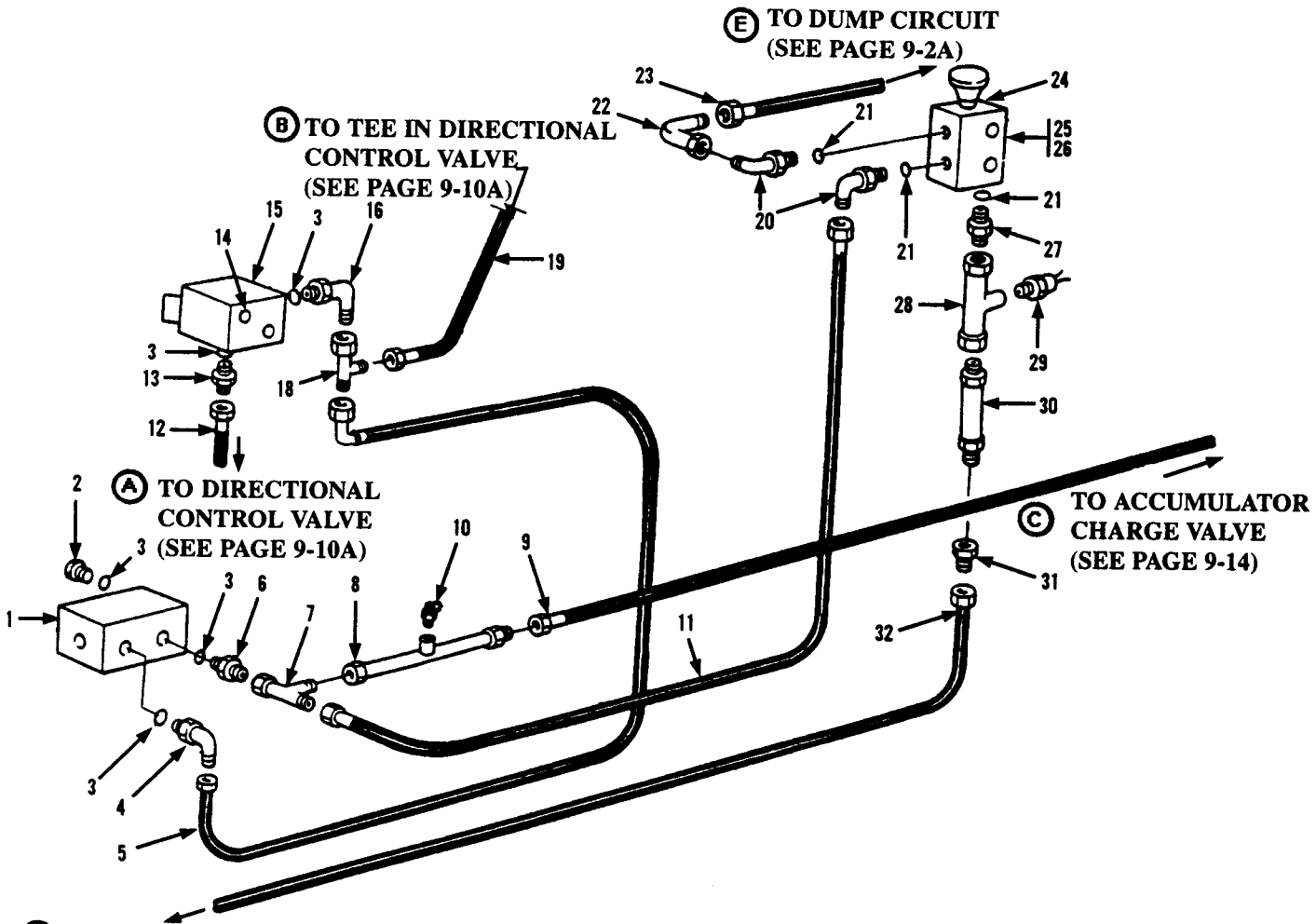

Item	Part No.	Qty.	Description Of Part
1	9103-3307	Ref	BRAKE VALVE ASSY (see page 10-21 for details)
2	8866-2174	1	HEX HD PLUG (includes item 3)
3	8859-1204	5	O-RING
4	8866-2064	1	ELBOW - 90 DEGREES (includes item 3)
5	9020-7411	1	HOSE ASSY
6	8866-2005	1	CONNECTOR (includes item 3)
7	8866-2239	1	SWIVEL NUT RUN TEE, 3/8 TUBE
8	9104-3163	1	TUBE ASSY
9		Ref	HOSE ASSY (see page 9-14 for details)
10	7713-3089	1	MINI-CHECK COUPLING
11	8471-7508	1	HOSE ASSY
12	7713-3342	1	HOSE ASSY
13	8866-2005	1	CONNECTOR (includes item 3)
14	8821-2228	2	SOCKET HD CAPSCREW, 5/16-18X1-1/4, GR8
15	9103-3096	1	INCHING VALVE ASSY
	9103-4018	1	VALVE SEAL KIT
16	8866-2064	1	ELBOW - 90 DEGREES (includes item 3)

Item	Part No.	Qty.	Description Of Part
17	9103-3130	1	TUBE ASSY
18	8866-2239	1	SWIVEL NUT RUN TEE, 3/8 TUBE
19	8471-7466	1	HOSE ASSY
20	8866-2065	2	ELBOW - 90 DEGREES (includes item 21)
21	8859-1205	3	O-RING
22	8866-2105	1	ELBOW - 90 DEGREES (swivel nut)
23	7713-3167	1	HOSE ASSY
24	9104-3090	Ref	PARK BRAKE VALVE (see page 10-22 for details)
25	8826-1021	2	SOCKET BUTTON HD CAPSCREW, 5/16-18X5/8
26	8855-1010	2	LOCKWASHER, 5/16
27	8866-2018	1	CONNECTOR (includes item 21)
28	9104-3131	1	TUBE ASSY
29	9104-3077	1	PRESSURE SWITCH
30	9104-3143	1	CHECK VALVE
31	8866-1342	1	TUBE END REDUCER, 1/2X3/8
32		Ref	HOSE ASSY (see page 8-1B for details)

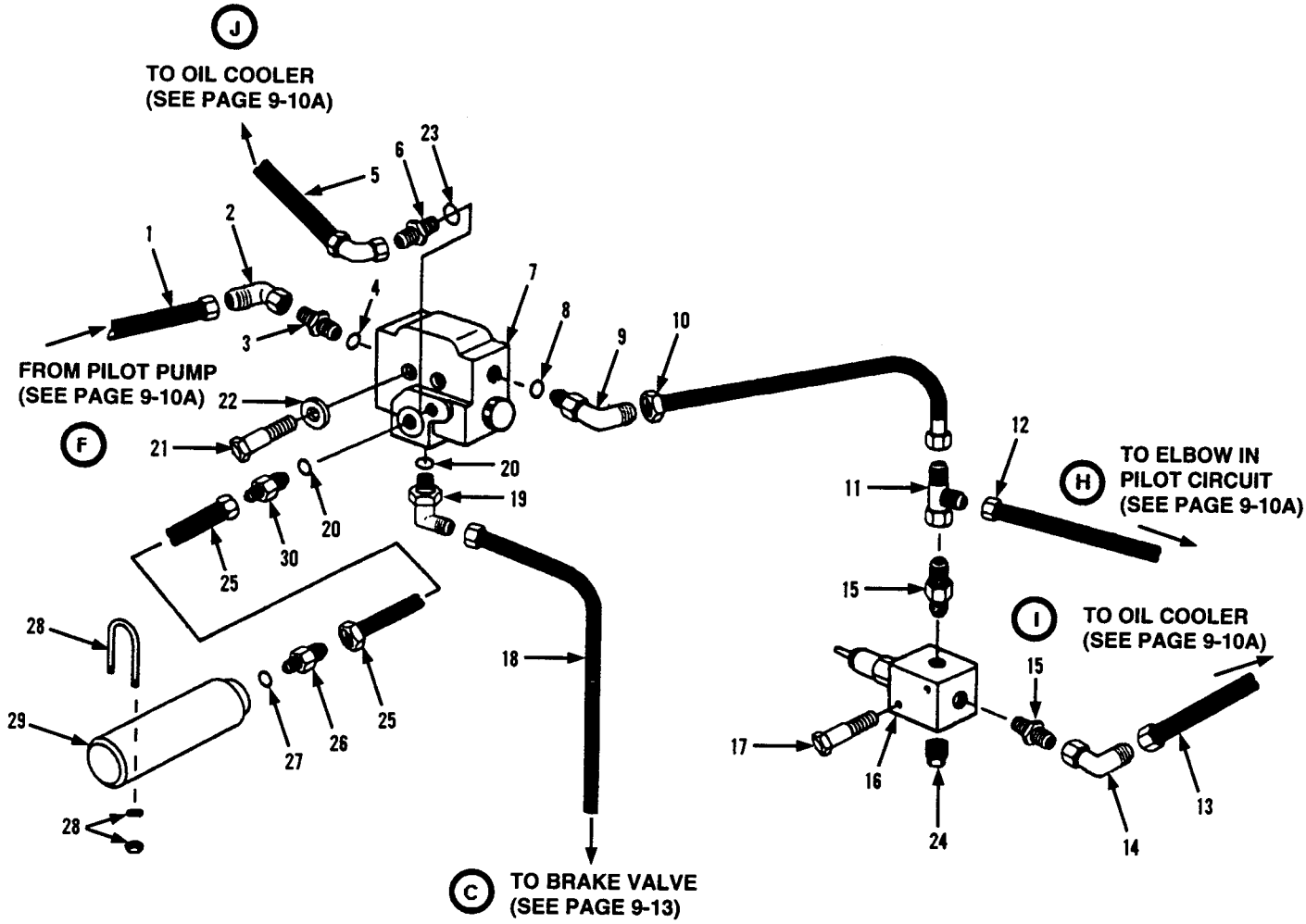

Item	Part No.	Qty.	Description Of Part
1	8471-6251	1	HOSE ASSY
2	8866-2108	1	ELBOW, 90 DEGREES (swivel nut)
3	8866-2023	1	CONNECTOR (includes item #4)
* 4	8859-1205	2	O-RING
5	8471-7638	1	HOSE ASSY
6	8866-2003	1	CONNECTOR (includes item #23)
7		Ref	ACCUMULATOR CHARGE VALVE (see page 10-20 for details)
* 8	8859-1205	1	O-RING
* 9	8866-2085	1	ELBOW, 45 DEGREES (includes item #8)
10	9020-7360	1	HOSE ASSY
*11	8866-2240	1	SWIVEL NUT RUN TEE, 1/2 TUBE
12	8471-7517	1	HOSE ASSY
13	8471-7518	1	HOSE ASSY
14	8866-2120	1	ELBOW, 45 DEGREES (swivel nut)
15	8874-3003	2	MALE ADAPTER, 3/8 X 1/2 TUBE
16	9103-3128	1	RELIEF VALVE ASSY

Item	Part No.	Qty.	Description Of Part
17	8820-1009	2	HEX HD CAPSCREW, 1/4-20 X 2, GR5
18	8471-7561	1	HOSE ASSY
19	8866-2065	1	ELBOW, 90 DEGREES (includes item #20)
20	8859-1205	1	O-RING
21	8821-1046	2	SOCKET HD CAPSCREW, 1/4-20x2, GR8
22	8855-1105	2	LOCK WASHER, 1/4 (hi-collar)
23	8859-1202	1	O-RING
24	8871-1282	1	SOCKET HD PIPE PLUG, 3/8
25	8471-7610	1	HOSE ASSY
26	8866-2020	1	CONNECTOR (includes item #27)
27	8859-1207	1	O-RING
28	8368-3175	2	CLAMP
29	9105-3380	1	ACCUMULATOR
*	9105-4003	1	ACCUMULATOR (uncharged)
30	8866-2006	1	CONNECTOR (includes item #4)

HYDRAULIC CIRCUITS
Accumulator, Charging Valve & Lines
Starting Serial No. 8744115G
Also Machine S/N 8744079G
Original Issue 4-87
Revised 7-16-99

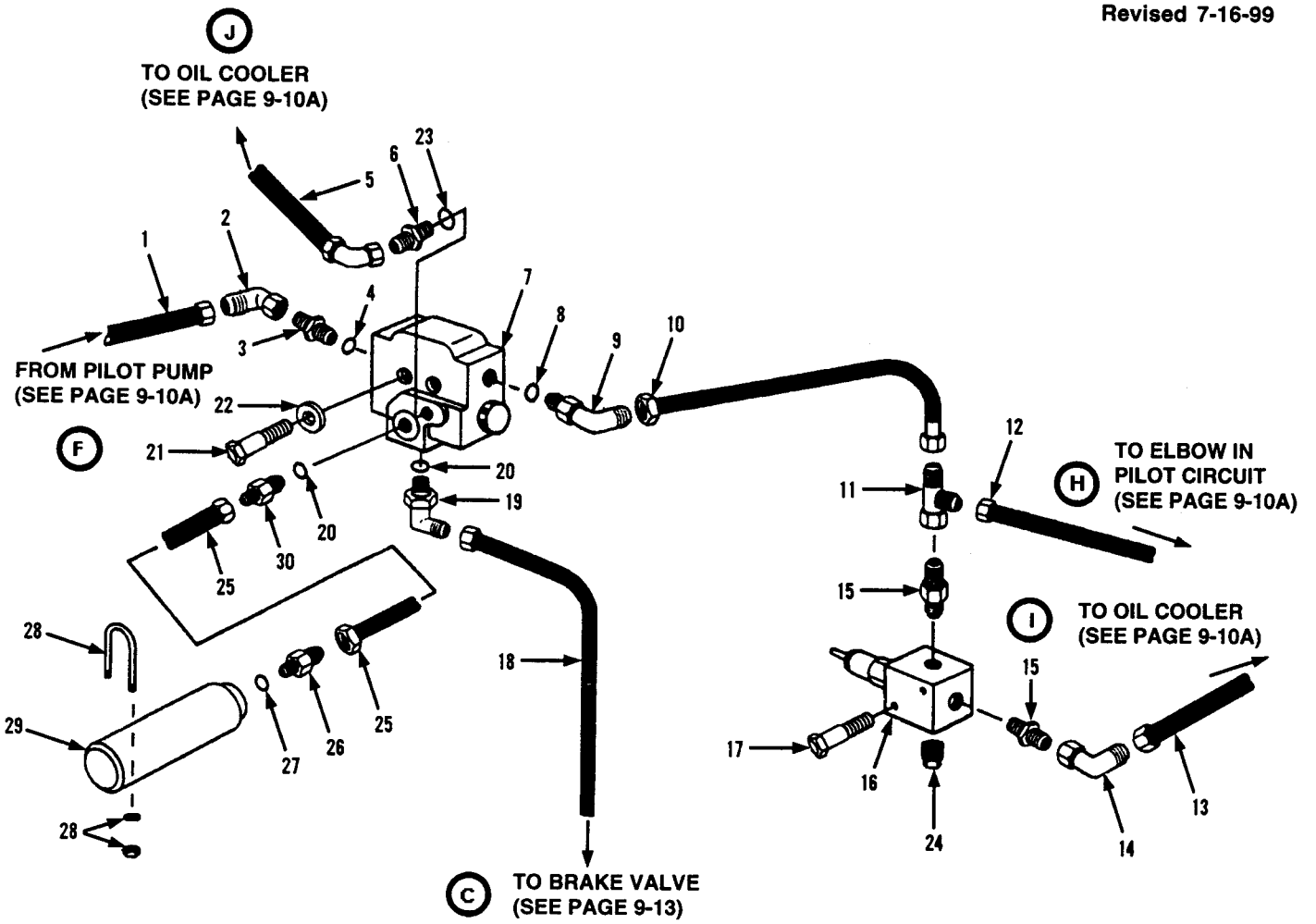

Item	Part No.	Qty.	Description Of Part
1	8471-6251	1	HOSE ASSY
2	8866-2108	1	ELBOW, 90 DEGREES (swivel nut)
3	8866-2023	1	CONNECTOR (includes item #4)
* 4	8859-1205	2	O-RING
5	8471-7638	1	HOSE ASSY
6	8866-2003	1	CONNECTOR (includes item #23)
7		Ref	ACCUMULATOR CHARGE VALVE (see page 10-20 for details)
* 8	8859-1205	1	O-RING
* 9	8866-2085	1	ELBOW, 45 DEGREES (includes item #8)
10	9020-7360	1	HOSE ASSY
*11	8866-2240	1	SWIVEL NUT RUN TEE, 1/2 TUBE
12	8471-7517	1	HOSE ASSY
13	8471-7518	1	HOSE ASSY
14	8866-2120	1	ELBOW, 45 DEGREES (swivel nut)
15	8874-3003	2	MALE ADAPTER, 3/8 X 1/2 TUBE
16	9103-3128	1	RELIEF VALVE ASSY

Item	Part No.	Qty.	Description Of Part
17	8820-1009	2	HEX HD CAPSCREW, 1/4-20 X 2, GR5
18	8471-7561	1	HOSE ASSY
19	8866-2065	1	ELBOW, 90 DEGREES (includes item #20)
20	8859-1205	1	O-RING
21	8821-1046	2	SOCKET HD CAPSCREW, 1/4-20x2, GR8
22	8855-1105	2	LOCK WASHER, 1/4 (hi-collar)
23	8859-1202	1	O-RING
24	8871-1282	1	SOCKET HD PIPE PLUG, 3/8
25	8471-7610	1	HOSE ASSY
26	8866-2020	1	CONNECTOR (includes item #27)
27	8859-1207	1	O-RING
28	8368-3175	2	CLAMP
29	9105-3380	1	ACCUMULATOR
*	9105-4003	1	ACCUMULATOR (uncharged)
30	8866-2006	1	CONNECTOR (includes item #4)

LIFT CYLINDER

Starting Serial No. 8344001L
Original Issue 8-86
Revised 5-31-05

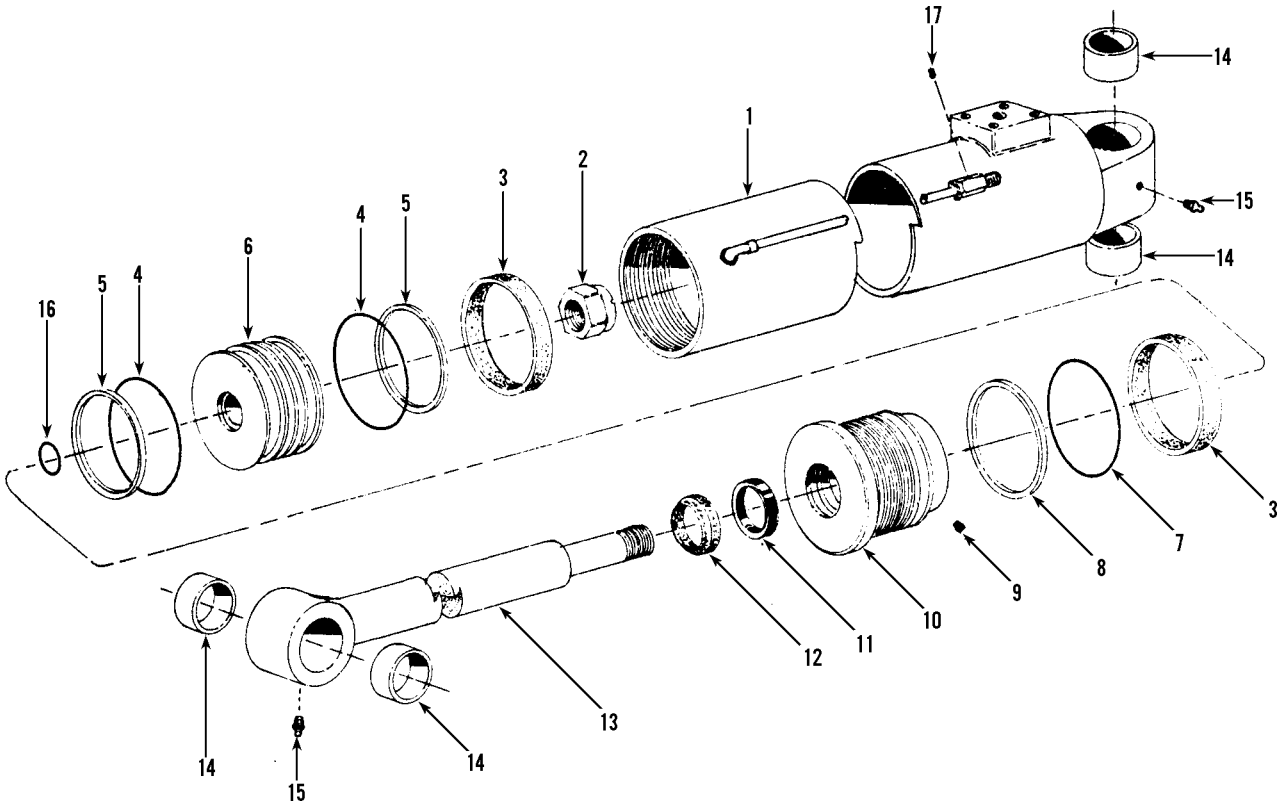

6000# Units

Item	Part No.	Qty.	Description Of Part
-	9080-1333	2	CYLINDER, LIFT
1	9020-7962	1	-BARREL
2	9002-7961	1	-NUT
3	9020-7960	2	-RING, WEAR
4	9020-7958	2	-O-RING, PISTON
5	9020-7957	2	-SEAL, PISTON
6	9020-7959	1	-PISTON
7	9020-7963	1	-O-RING
8	9020-7964	1	-RING, BACKUP
* 9	9104-4084	1	-SCREW, SET
10	9020-7965	1	-BEARING, ROD
11	9020-7966	1	-SEAL, ROD
12	9020-7967	1	-WIPER
13	9020-7968	1	-ROD, PISTON
14	9020-5414	2	-BUSHING
15	9002-2217	2	-FITTING, GREASE
16	9002-3222	1	-O-RING, PISTON ROD
17	9020-7970	1	-PLUG, PIPE
	9020-7956	AR	KIT, SEAL

8000# Units

Item	Part No.	Qty.	Description Of Part
-	9080-1180	2	CYLINDER, LIFT
1	9020-6978	1	-BARREL
2	9002-2232	1	-NUT, 1-1/2" NC, (self locking)
3	9002-2260	2	-RING, WEAR
4	9002-3157	2	-O-RING SEAL
5	9002-2240	2	-SEAL, PISTON
6	9040-0393	1	-PISTON
7	9002-3349	1	-O-RING
8	9002-5349	1	-RING, BACKUP
9	9020-6042	1	-PLUG, NYLON
10	9040-0074	1	-BEARING, ROD
11	9002-2250	1	-SEAL, ROD
12	9002-2280	1	-WIPER
13	9020-6979	1	-ROD, PISTON
14	9020-5414	4	-BUSHING
15	9002-2217	2	-FITTING, GREASE
16	9002-3128	1	-O-RING, PISTON
	9020-7953	AR	KIT, SEAL

** Changed part number on item 9.*

HYDRAULIC COMPONENTS
(9103-3286) (IOWA) Lift Cylinder
Starting Serial No. 0144293H
Original Issue 8-88
Revised 6-27-07

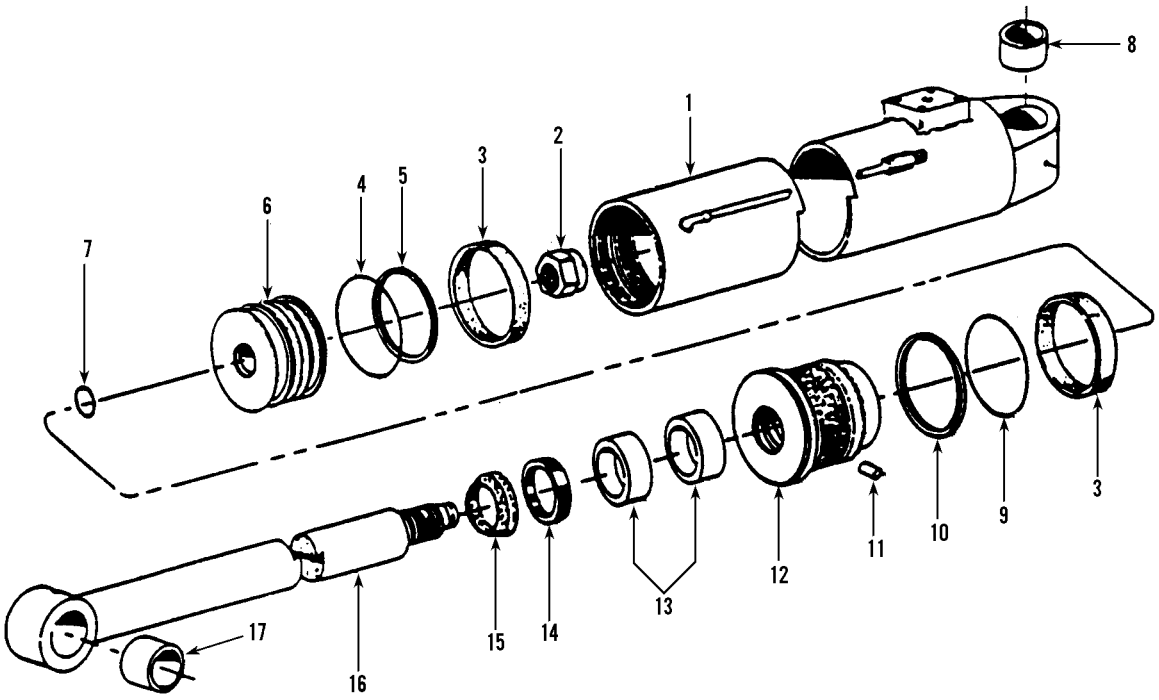

BEFORE SERVICING CYLINDERS, PLEASE NOTE MACHINE S/N SUFFIX.
"H" DESIGNATES IOWA CYLINDERS
"J" DESIGNATES JARP CYLINDERS
"S" DESIGNATES SEITZ CYLINDERS

Item	Part No.	Qty.	Description Of Part
	9103-3286	2	LIFT CYLINDER ASSY, (includes all items)
	9103-4140	1	SEAL KIT, (includes items 3, 4, 5, 7, 9, 10, 11, 13, 14 & 15)
1	9103-4138	1	CASE ASSY, (includes item 8)
2	9103-4153	1	HEX LOCKNUT, (lubricate and torque to 1200 ft.lbs.)
3		2	WEAR RING
4		1	O-RING
5		1	PISTON SEAL
6	9103-4139	1	PISTON
7			O-RING
8	9103-4154	1	BUSHING
9		1	O-RING
10		1	BACK UP RING
11		1	NYLON PLUG
12	9103-4136	1	HEAD
13		2	WEAR RING
14		1	U-CUP
15		1	WIPER
16	9103-4137	1	SHAFT ASSY, (includes item 17)
*17	9140-4352	1	BUSHING
			NOTE: ONLY ITEMS WITH PART NUMBERS ARE AVAILABLE FOR SERVICE.

** Revised part number on item 17.*

HYDRAULIC COMPONENTS
(9103-3370) & (9103-3371) Lift Cylinders
Starting Serial No. 0144784S
Original Issue 1-01

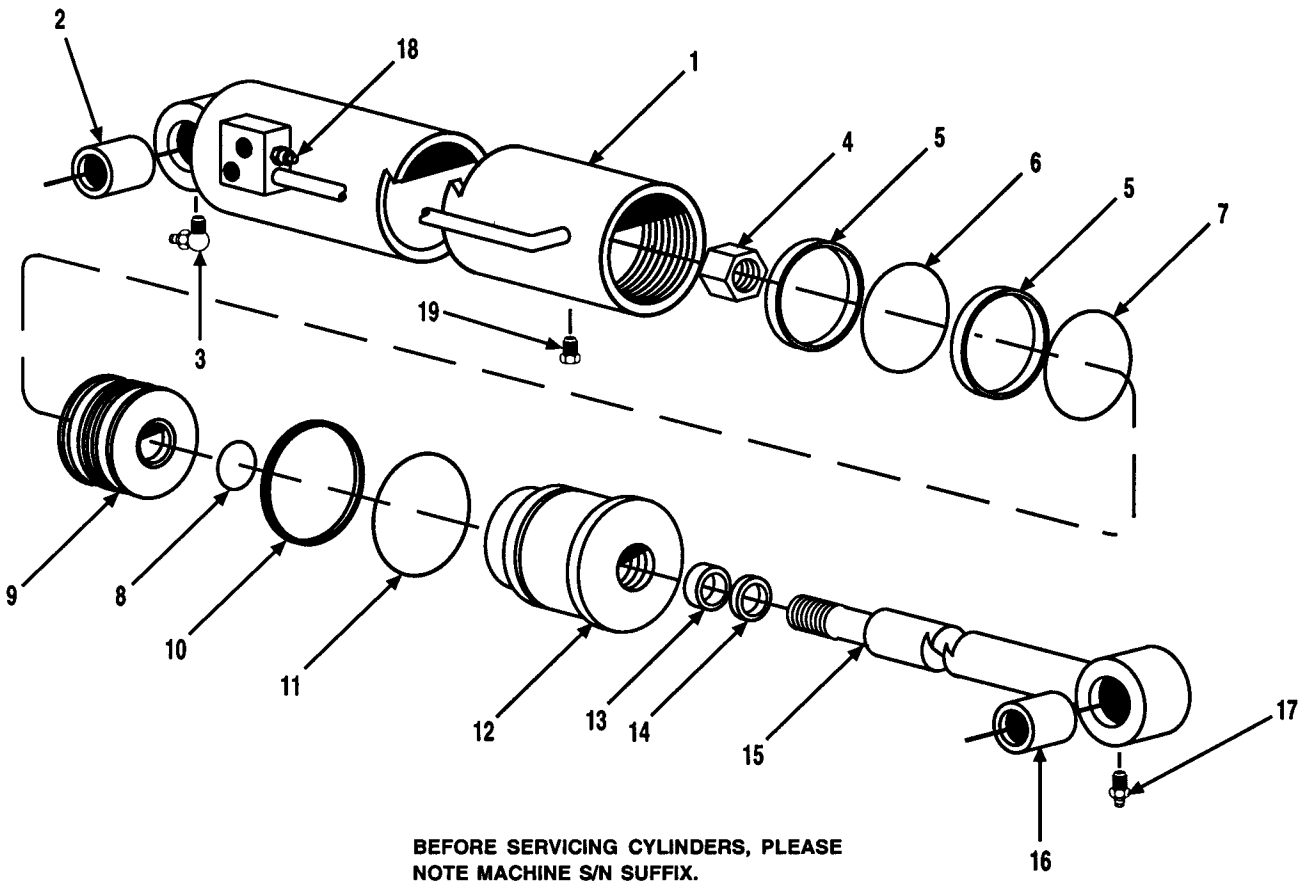

BEFORE SERVICING CYLINDERS, PLEASE NOTE MACHINE S/N SUFFIX.
"H" DESIGNATES IOWA CYLINDERS
"J" DESIGNATES JARP CYLINDERS
"S" DESIGNATES SEITZ CYLINDERS

Item	Part No.	Qty.	Description Of Part
	9103-3370	2	LIFT CYLINDER ASSY, 6000 lbs., (includes all items)
	9103-4284	AR	SEAL KIT, (includes items 5, 6, 7, 8, 10, 11, 13 & 14)
1	9103-4285	1	TUBE ASSY, (includes item 2)
2	9108-4176	1	BUSHING
3	9103-4438	1	LUBE FITTING, 90 DEGREES, 1/4-28
4	9103-4286	1	LOCKNUT, (torque to 1100 ft.lbs.)
5		2	WEAR RING
6		1	SEAL
7		1	O-RING
8		1	O-RING
9	9103-4287	1	PISTON
10		1	BACKUP RING
11		1	O-RING
12	9103-4439	1	GLAND
13		1	SEAL
14		1	WIPER
15	9103-4440	1	ROD ASSY, (includes item 16)
16	9104-4370	1	BUSHING
17	9108-4343	1	LUBE FITTING, STRAIGHT, 1/4-28
18	9103-4308	1	COUNTERBALANCE VALVE
			NOTE: ONLY ITEMS WITH PART NUMBERS ARE AVAILABLE FOR SERVICE.

Item	Part No.	Qty.	Description Of Part
	9103-3371	2	LIFT CYLINDER ASSY, 8000 lbs., (includes all items)
	9103-4278	AR	SEAL KIT, (includes items 5, 6, 7, 8, 10, 11, 13 & 14)
1	9103-4279	1	TUBE ASSY, (includes item 2)
2	9108-4176	1	BUSHING
3	8867-1027	1	LUBE FITTING, 90 DEGREES, 1/4-28
4	9103-4280	1	LOCKNUT, (torque to 1100 ft.lbs.)
5		2	WEAR RING
6		1	SEAL
7		1	O-RING
8		1	O-RING
9	9103-4281	1	PISTON
10		1	BACKUP RING
11		1	O-RING
12	9103-4282	1	GLAND
13		1	SEAL
14		1	WIPER
15	9103-4283	1	ROD ASSY, (includes item 16)
16	9104-4370	1	BUSHING
17	8867-1033	1	LUBE FITTING, STRAIGHT, 1/4-28
18	9103-3430	1	COUNTERBALANCE VALVE
19	9103-4332	1	SET SCREW
			NOTE: ONLY ITEMS WITH PART NUMBERS ARE AVAILABLE FOR SERVICE.

HYDRAULIC COMPONENTS
(9080-1293) CROWD CYLINDER
Starting Serial No. 8344001L
Revised 7-16-99

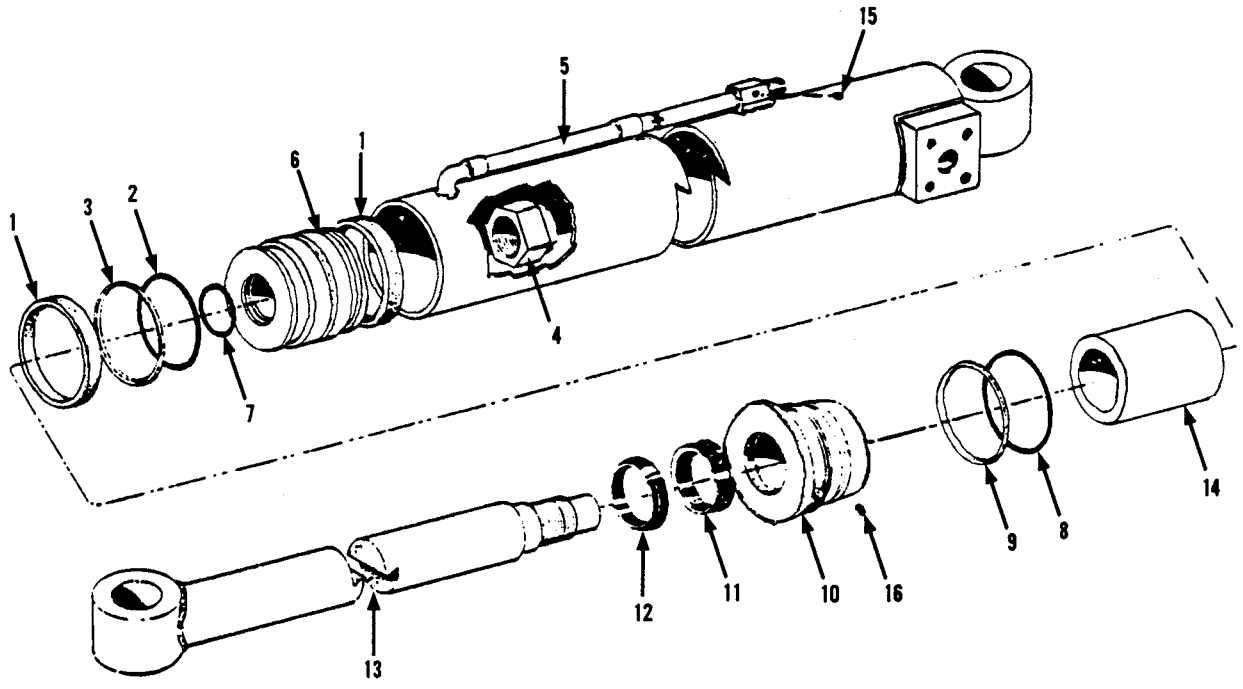

Item	Part No.	Qty.	Description Of Part
* -	9020-8023	1	SEAL KIT (includes 1,2,3,7,8,9,11,& 12)
-	9080-1293	1	CROWD CYLINDER
1	9002-2295	2	- WEAR RING
2	9002-3153	1	- O-RING
3	9020-6799	1	- PISTON SEAL
4	9002-2232	1	- NUT
5	9060-2804	1	- BARREL
6	9020-6795	1	- PISTON
7	9002-3128	1	- O-RING, PISTON ROD
8	9002-3342	1	- O-RING, ROD BEARING
9	9002-4342	1	- BACK-UP RING
10	9020-6794	1	- ROD BEARING
11	9020-7986	1	- ROD SEAL
12	9020-6798	1	- WIPER RING
13	9060-2805	1	- PISTON ROD
14	9020-6796	1	- SPACER
15	9002-2217	1	- PIPE PLUG
16	9020-6042	1	- NYLON PLUG

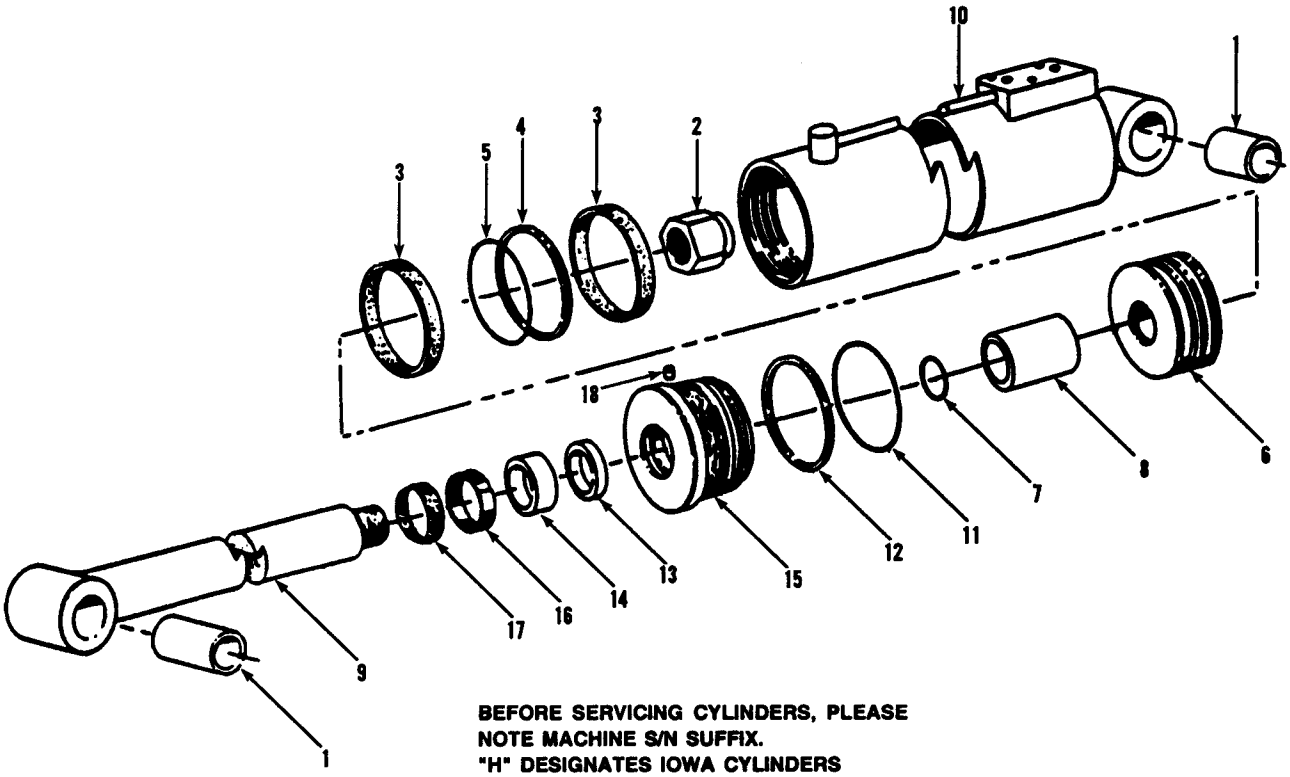

BEFORE SERVICING CYLINDERS, PLEASE NOTE MACHINE S/N SUFFIX.
"H" DESIGNATES IOWA CYLINDERS
"J" DESIGNATES JARP CYLINDERS
"S" DESIGNATES SEITZ CYLINDERS

Item	Part No.	Qty.	Description Of Part
	9103-3290	1	CROWD CYLINDER ASSY, (includes all items)
	9103-4223	1	SEAL KIT, (includes items 3, 4, 5, 7, 11, 12, 13, 14, 16, 17 & 18)
1	9103-4218	2	BUSHING
2	9106-4017	1	LOCKNUT
3		2	WEAR RING
4		1	PISTON SEAL
5		1	O-RING
6	9104-4274	1	PISTON
7		1	O-RING
8	9103-4219	1	STOKE LIMITER
9	9103-4220	1	SHAFT ASSY, (includes item 1)
10	9103-4221	1	CASE ASSY, (includes item 1)
11		1	O-RING
12		1	BACKUP RING
13		1	WEAR RING
14		1	WEAR RING
15	9103-4222	1	CYLINDER HEAD
16		1	U-CUP
17		1	WIPER RING
18		1	NYLON PLUG
			NOTE: ONLY PART NUMBERED ITEMS ARE AVAILABLE FOR SERVICE REPLACEMENT.

BEFORE SERVICING CYLINDERS, PLEASE
NOTE MACHINE S/N SUFFIX.
"H" DESIGNATES IOWA CYLINDERS
"J" DESIGNATES JARP CYLINDERS
"S" DESIGNATES SEITZ CYLINDERS

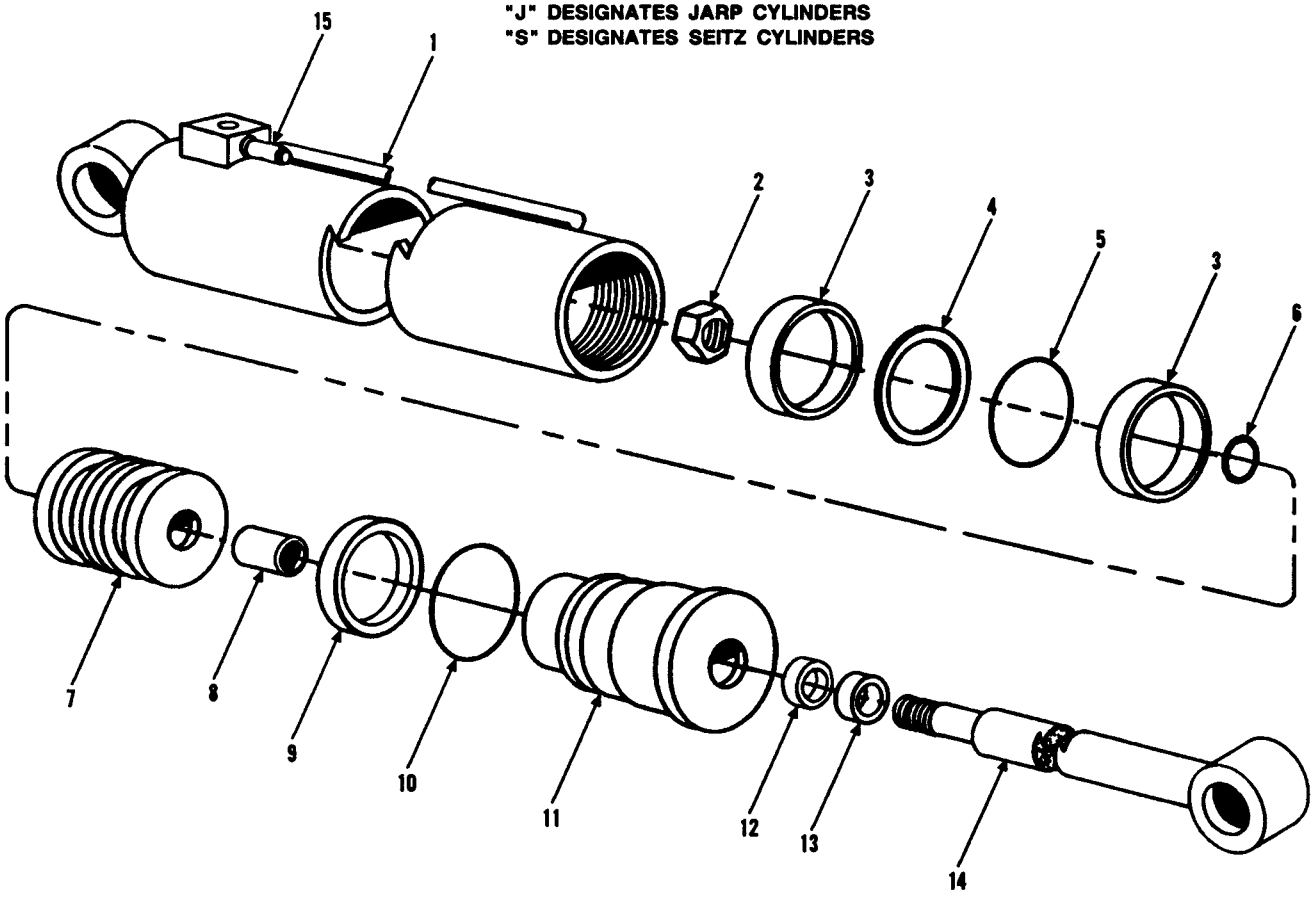

Item	Part No.	Qty.	Description Of Part
	9103-3368	1	CROWD CYLINDER ASSY, (includes all items)
	9103-4290	AR	SEAL KIT, (includes items 3, 4, 5, 6, 9, 10, 12 & 13)
1		1	TUBE ASSY
2	9103-4286	1	LOCKNUT, (torque to 590 ft.lbs.)
3		2	WEAR RING
4		1	SEAL
5		1	O-RING
6		1	O-RING
7	9103-4291	1	PISTON
8	9103-4292	1	STOP TUBE
9		1	BACKUP RING
10		1	O-RING
11	9103-4293	1	GLAND
12		1	SEAL
13		1	WIPER
14	9103-4294	1	ROD ASSY
15	9103-4308	1	COUNTERBALANCE VALVE
	9104-4524	1	COUNTERBALANCE VALVE SEAL KIT
			NOTE: ONLY ITEMS WITH PART NUMBERS ARE AVAILABLE FOR SERVICE.

TILT AND TILT COMP. CYL. 6000#

Starting Serial No. 8344001L
Thru Serial No. 8344011L
Original Issue 8-87
Revised 7-16-99

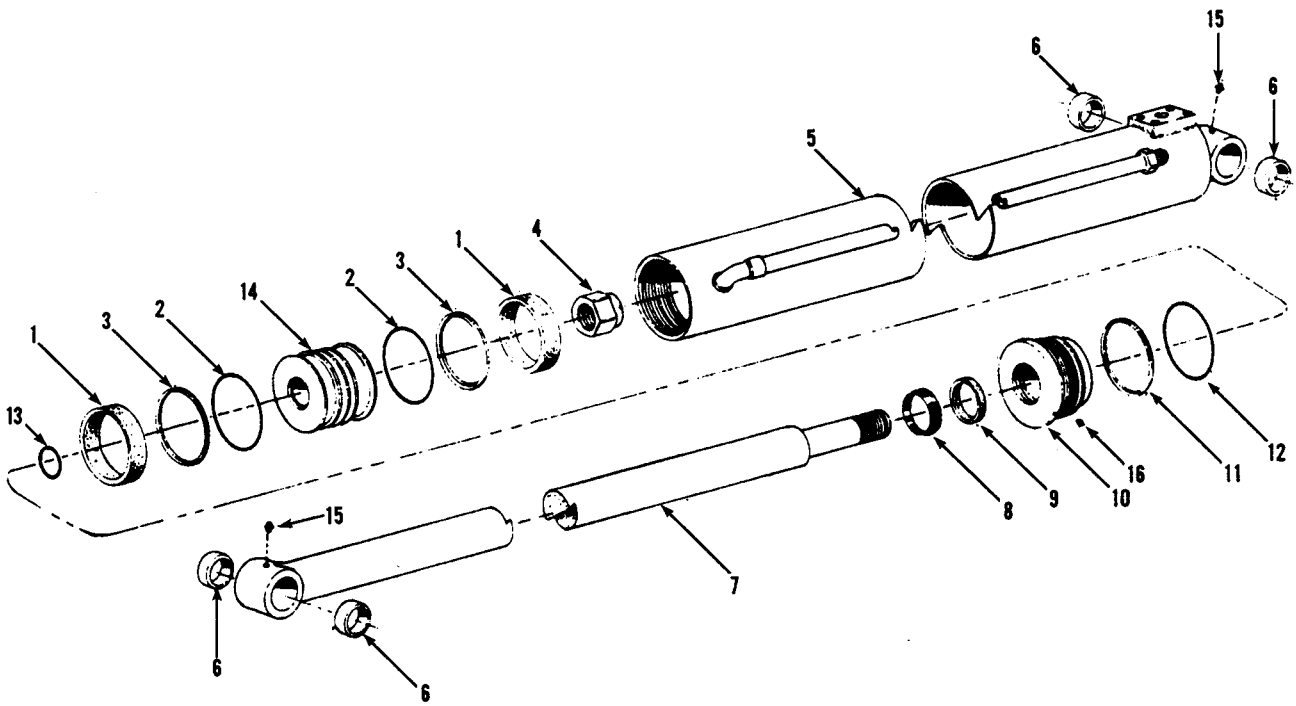

6000#

Item	Part No.	Qty.	Description Of Part
-	9080-1291		TILT COMPENSATING CYLINDER
-	9080-1292		TILT CYLINDER
	9020-1553	AR	SEAL KIT (includes items 1,2,3,8,9,11,12,13)
1	9103-4040	2	WEAR RING
2	9103-4041	2	PISTON O-RING
3	9002-2239	2	PISTON SEAL
4	9002-2232	1	SELF LOCKING NUT
5	9103-4053	1	CYLINDER BARREL (tilt comp.)
	9103-4042	1	CYLINDER BARREL (tilt)
6	9020-6793	4	BUSHING
7	9103-4054	1	PISTON ROD (tilt comp.)
	9103-4050	1	PISTON ROD (tilt)
8	9103-4051	1	WIPER RING
9	9103-4052	1	ROD SEAL
10	9040-0062	1	ROD BEARING
11	9103-4045	1	BACK-UP RING
12	9103-4046	1	ROD BEARING O-RING
13	9103-4047	1	PISTON ROD O-RING
14	9040-2123	1	PISTON
15	8867-1001	2	LUBE FITTING - STRAIGHT - 1/8
16	9020-6042	1	NYLON PLUG

HYDRAULIC COMPONENTS
(9103-3287) (IOWA) Tilt Cylinder
Starting Serial No. 0144293H
Original Issue 8-88
Revised 6-27-07

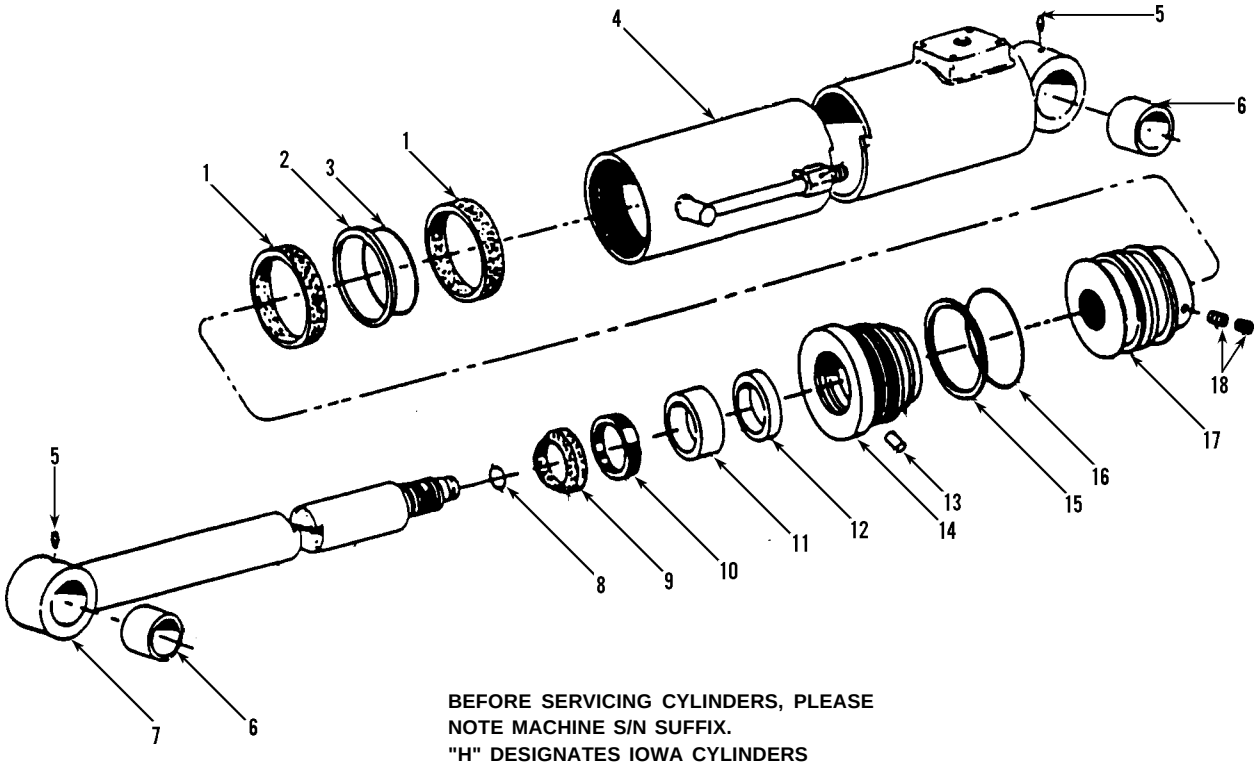

BEFORE SERVICING CYLINDERS, PLEASE NOTE MACHINE S/N SUFFIX.
"H" DESIGNATES IOWA CYLINDERS
"J" DESIGNATES JARP CYLINDERS
"S" DESIGNATES SEITZ CYLINDERS

Item	Part No.	Qty.	Description Of Part
	9103-3287	1	TILT CYLINDER ASSY, (includes all items)
	9103-4150	1	SEAL KIT, (includes items 1, 2, 3, 8 thru 13, 15 & 16)
1		2	WEAR RING
2		1	PISTON SEAL
3		1	O-RING
4	9103-4148	1	CASE ASSY, (includes item 6)
5	8867-1008	2	LUBE FITTING, STRAIGHT, 1/4-28
* 6	9140-4352	2	BUSHING
7	9103-4147	1	SHAFT ASSY, (includes item 6)
8		1	O-RING
9		1	WIPER
10		1	U-CUP
11		1	WEAR RING, (wide)
12		1	WEAR RING, (narrow)
13		1	NYLON PLUG
14	9103-4146	1	HEAD
15		1	BACK-UP RING
16		1	O-RING
17	9103-4149	1	PISTON, (lubricate & torque to 550 ft.lbs.)
18	9103-4155	2	SET SCREW
			NOTE: ONLY PART NUMBERED ITEMS ARE AVAILABLE FOR SERVICE REPLACEMENT.

** Revised part number on item 6.*

HYDRAULIC COMPONENTS
(9080-1327) (JARP) Tilt Cyl.
(9080-1328) (JARP) Tilt Comp. Cyl. 6000#

Starting Serial No. 8744142G
Original Issue 8-87
Revised 1-12-01

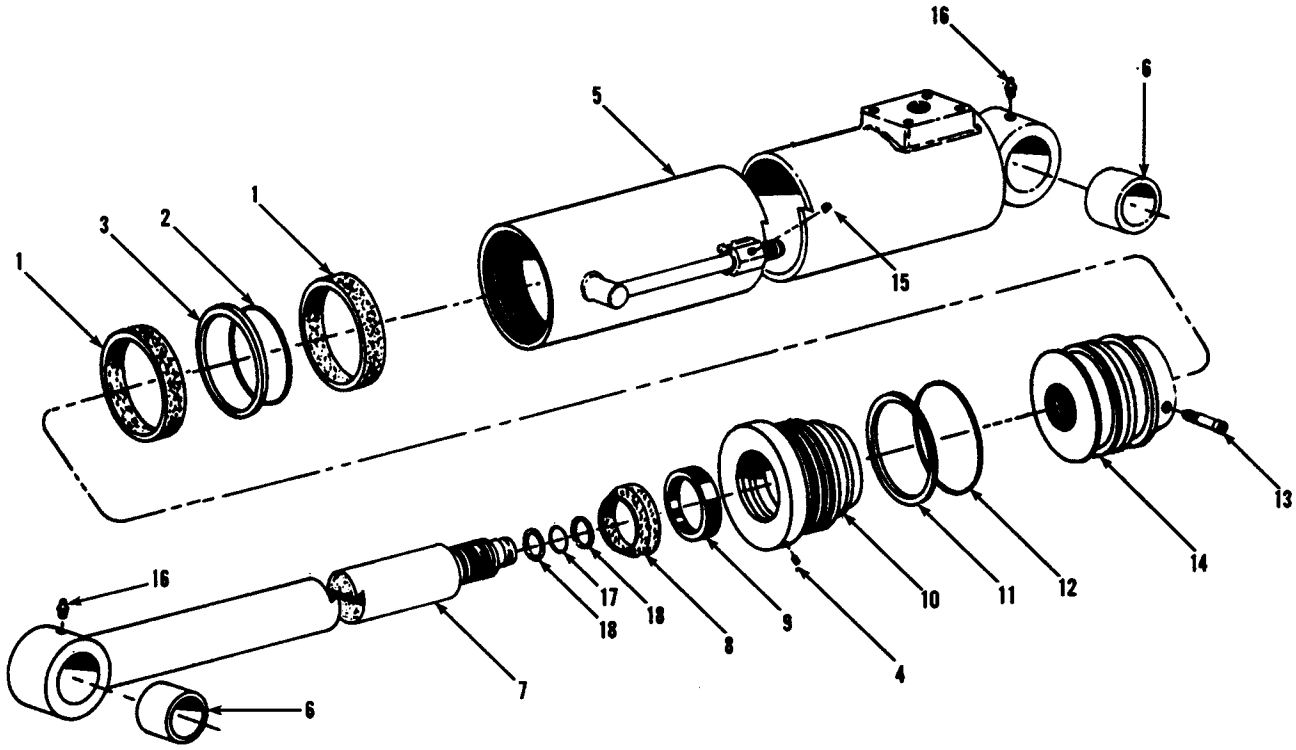

BEFORE SERVICING CYLINDERS, PLEASE NOTE MACHINE S/N SUFFIX.
"H" DESIGNATES IOWA CYLINDERS
"J" DESIGNATES JARP CYLINDERS
"S" DESIGNATES SEITZ CYLINDERS

Item	Part No.	Qty.	Description Of Part
	9080-1328		TILT COMPENSATING CYLINDER, (includes all items)
	9020-7954	AR	SEAL KIT, (includes items 1, 2, 3, 8, 9, 11, 12, 17 & 18)
1		2	WEAR RING
2	9002-3157	1	PISTON O-RING
3	9002-2240	1	PISTON SEAL
4	9020-7535	1	SET SCREW
5	9020-7539	1	CYLINDER BARREL
6	9020-5414	2	BUSHING
7	9020-7541	1	PISTON ROD
8	9002-2280	1	WIPER RING
9	9002-2250	1	ROD SEAL
10	9020-7543	1	ROD BEARING
11	9002-5349	1	BACK-UP RING
12	9002-3349	1	ROD BEARING O-RING
13	9020-7544	1	SET SCREW, (rod bearing)
14	9020-7542	1	PISTON
15	9020-7536	1	PIPE PLUG
16	8867-1001	2	LUBE FITTING, STRAIGHT, 1/8
17	9020-7533	1	O-RING, (stem)
18	9020-7534	2	BACK-UP RING

Item	Part No.	Qty.	Description Of Part
	9080-1327	2	TILT CYLINDER, (includes all items)
	9020-7954	AR	SEAL KIT, (includes items 1, 2, 3, 8, 9, 11, 12, 17 & 18)
1		2	WEAR RING
2	9002-3157	1	PISTON O-RING
3	9002-2240	1	PISTON SEAL
4	9020-7535	1	SET SCREW
5	9020-7538	1	CYLINDER BARREL
6	9020-5414	2	BUSHING
7	9020-7540	1	PISTON ROD
8	9002-2280	1	WIPER RING
9	9002-2250	1	ROD SEAL
10	9020-7543	1	ROD BEARING
11	9002-5349	1	BACK-UP RING
12	9002-3349	1	ROD BEARING O-RING
13	9020-7544	1	SET SCREW, (rod bearing)
14	9020-7542	1	PISTON
15	9020-7536	1	PIPE PLUG
16	8867-1001	2	LUBE FITTING, STRAIGHT, 1/8
17	9020-7533	1	O-RING, (stem)
18	9020-7534	2	BACK-UP RING

TILT and TILT COMP. CYL. 6000#

Starting Serial No. 8344012L
thru Serial No. 8744136G
Revised 7-16-99

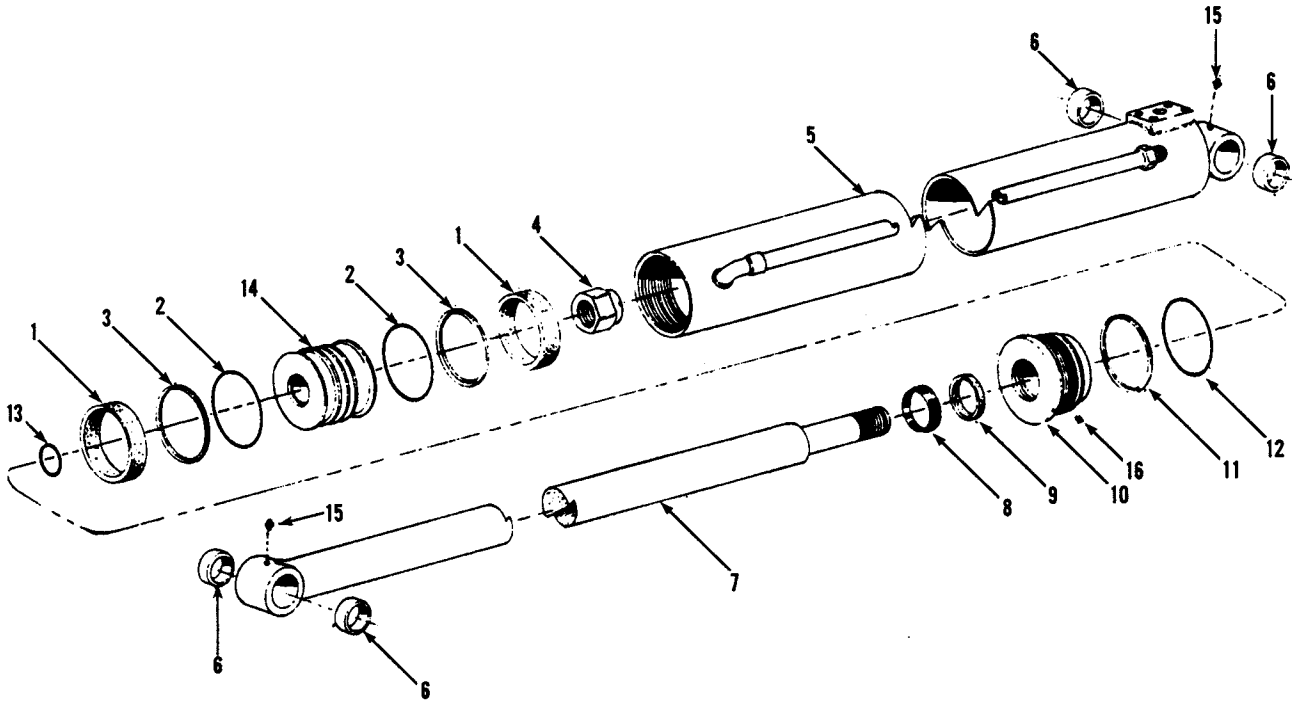

Item	Part No.	Qty.	Description Of Part
-	9080-1356		TILT COMPENSATING CYLINDER
-	9080-1357		TILT CYLINDER
	9103-4049	AR	SEAL KIT (includes items 1, 2, 3, 8, 9, 11, 12, 13)
1	9103-4040	2	WEARING
2	9103-4041	2	PISTON O-RING
3	9002-2239	2	PISTON SEAL
4	9002-2232	1	SELF LOCKING NUT
5	9103-4053	1	CYLINDER BARREL (tilt comp.)
	9103-4052	1	CYLINDER BARREL (tilt)
6	9020-6793	4	BUSHING
7	9103-4055	1	PISTON ROD (tilt comp.)
	9103-4043	1	PISTON ROD (tilt)
8	9002-2280	1	WIPER RING
9	9103-4044	1	ROD SEAL
10	9040-2122	1	ROD BEARING
11	9103-4045	1	BACK-UP RING
12	9103-4046	1	ROD BEARING O-RING
13	9103-4047	1	PISTON ROD O-RING
14	9040-2123	1	PISTON
15	8867-1001	2	LUBE FITTING- STRAIGHT 1/8
16	9103-4048	1	NYLON PLUG

** Changed the page number from 10-3.1 to 10.3.*

HYDRAULIC COMPONENTS
(9103-3369) (SEITZ) Tilt Cylinder
Starting Serial No. 0144784S
Original Issue 1-01

BEFORE SERVICING CYLINDERS, PLEASE NOTE MACHINE S/N SUFFIX.
"H" DESIGNATES IOWA CYLINDERS
"J" DESIGNATES JARP CYLINDERS
"S" DESIGNATES SEITZ CYLINDERS

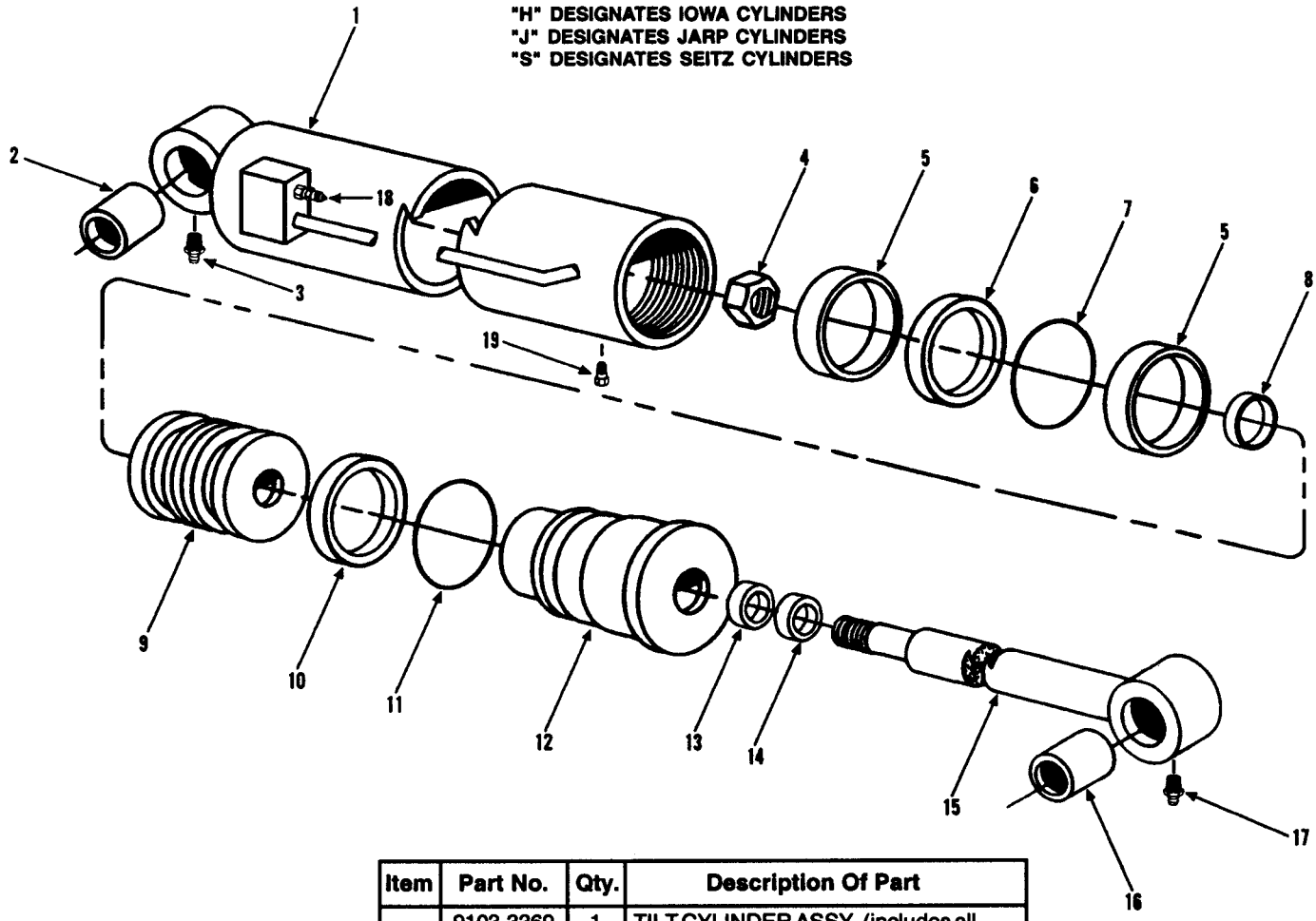

Item	Part No.	Qty.	Description Of Part
	9103-3369	1	TILT CYLINDER ASSY, (includes all items)
	9103-4278	AR	SEAL KIT, (includes items 5, 6, 7, 8, 10, 11, 13 & 14)
1	9103-4295	1	TUBE ASSY, (includes item 2)
2	9108-4176	1	BUSHING
3	8867-1027	1	LUBE FITTING, 90 DEGREES, 1/4-28
4	9103-4280	1	LOCKNUT, (torque to 1100 ft.lbs.)
5		2	WEAR RING
6		1	SEAL
7		1	O-RING
8		1	O-RING
9	9103-4281	1	PISTON
10		1	BACK-UP RING
11		1	O-RING
12	9103-4282	1	GLAND
13		1	SEAL
14		1	WIPER
15	9103-4296	1	ROD ASSY, (includes item 16)
16	9108-4176	1	BUSHING
17	8867-1033	1	LUBE FITTING, STRAIGHT, 1/4-28
18	9103-3430	1	COUNTERBALANCE VALVE
19	9103-4332	1	SET SCREW
			NOTE: ONLY ITEMS WITH PART NUMBERS ARE AVAILABLE FOR SERVICE.

HYDRAULIC COMPONENTS
(9080-1327) (JARP) Tilt Cyl.
(9080-1328) (JARP) Tilt Comp. Cyl. 8000#

Starting Serial No. 8344001L
Revised 1-12-01

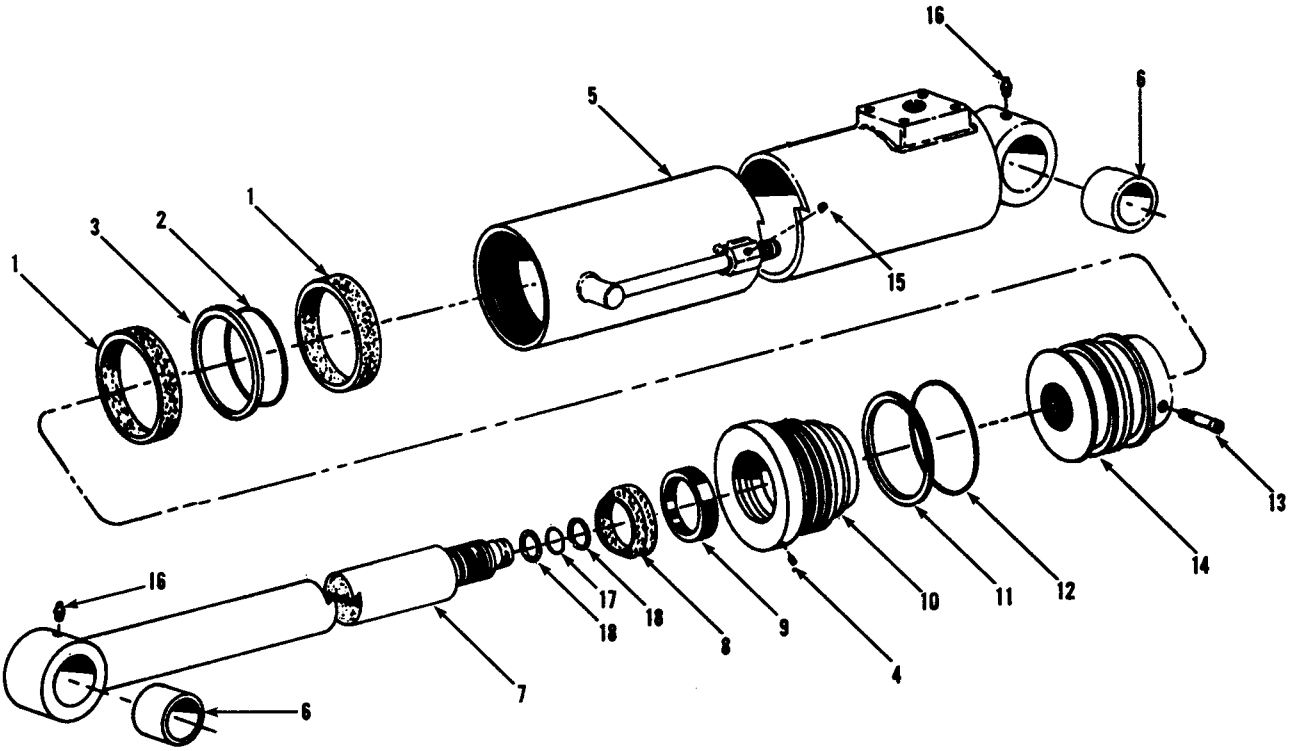

BEFORE SERVICING CYLINDERS, PLEASE NOTE MACHINE S/N SUFFIX.
"H" DESIGNATES IOWA CYLINDERS
"J" DESIGNATES JARP CYLINDERS
"S" DESIGNATES SEITZ CYLINDERS

Item	Part No.	Qty.	Description Of Part
	9080-1328	1	TILT COMP. CYL. ASSY, (includes all items)
	9020-7954	1	SEAL KIT, (includes items 1, 2, 3, 8, 9, 11, 12 , 17 & 18)
1		2	WEAR RING
2	9002-3157	1	O-RING, (piston)
3	9002-2240	1	PISTON SEAL
4	9020-7535	1	SET SCREW, (piston)
5	9020-7539	1	CYLINDER BARREL
6	9020-5414	2	BUSHING
7	9020-7541	1	PISTON ROD
8	9002-2280	1	WIPER RING
9	9002-2250	1	ROD SEAL
10	9020-7543	1	ROD BEARING
11	9002-5349	1	BACK-UP RING
12	9002-3349	1	O-RING, (rod bearing)
13	9020-7544	1	SET SCREW, (rod bearing)
14	9020-7542	1	PISTON
15	9020-7536	1	PIPE PLUG
16	8867-1001	2	LUBE FITTING, STRAIGHT, 1/8
17	9020-7533	1	O-RING, (stem)
18	9020-7534	2	BACK-UP RING

Item	Part No.	Qty.	Description Of Part
	9080-1327	2	TILT CYLINDER, (includes all items)
	9020-7954	AR	SEAL KIT, (includes items 1, 2, 3, 8, 9, 11, 12, 17 & 18)
1		2	WEAR RING
2	9002-3157	1	O-RING, (piston)
3	9002-2240	1	PISTON SEAL
4	9020-7535	1	SET SCREW, (piston)
5	9020-7538	1	CYLINDER BARREL
6	9020-5414	2	BUSHING
7	9020-7540	1	PISTON ROD
8	9002-2280	1	WIPER RING
9	9002-2250	1	ROD SEAL
10	9020-7543	1	ROD BEARING
11	9002-5349	1	BACK-UP RING
12	9002-3349	1	O-RING, (rod bearing)
13	9020-7544	1	SET SCREW, (rod bearing)
14	9020-7542	1	PISTON
15	9020-7536	1	PIPE PLUG
16	8867-1001	2	LUBE FITTING, STRAIGHT, 1/8
17	9020-7533	1	O-RING, (stem)
18	9020-7534	2	BACK-UP RING

HYUDRAULIC COMPONENTS

(9103-3288) (IOWA) Compensating Cylinder

Starting Serial No. 0144293H
Original Issue 8-88
Revised 6-27-07

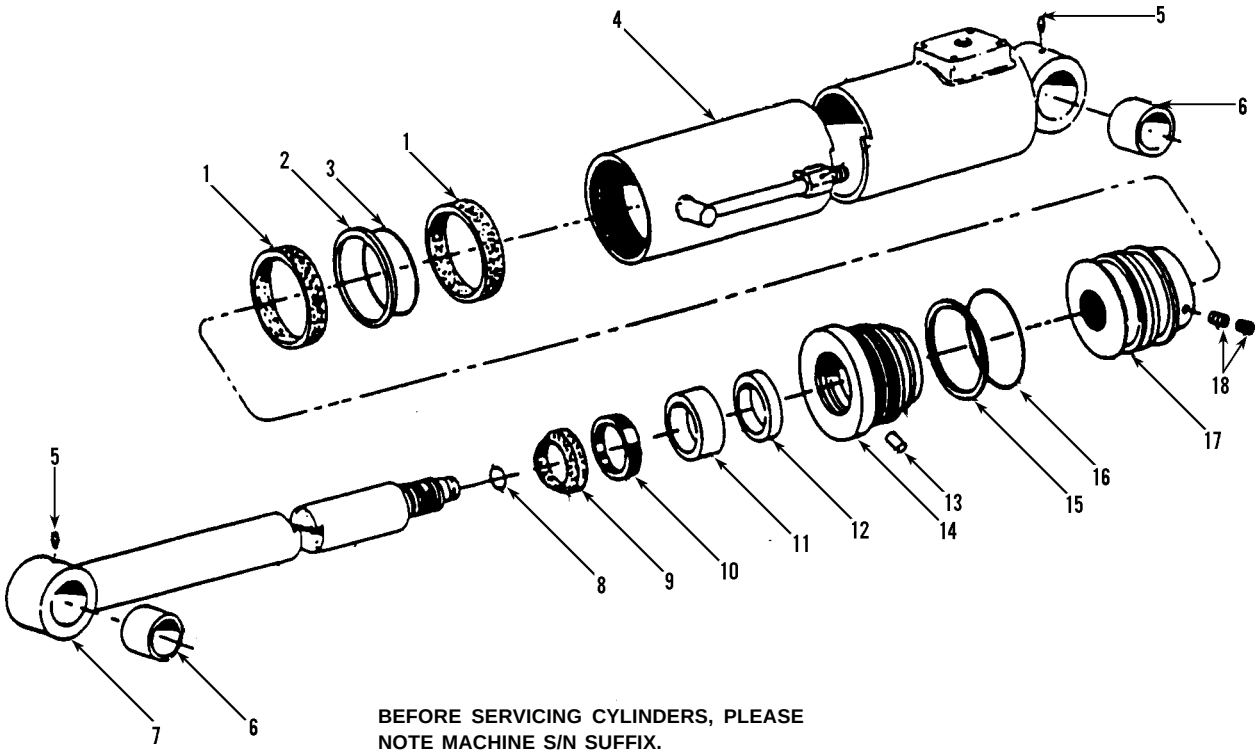

BEFORE SERVICING CYLINDERS, PLEASE NOTE MACHINE S/N SUFFIX.
"H" DESIGNATES IOWA CYLINDERS
"J" DESIGNATES JARP CYLINDERS
"S" DESIGNATES SEITZ CYLINDERS

Item	Part No.	Qty.	Description Of Part
	9103-3288	1	COMPENSATING CYLINDER ASSY, (includes all items)
	9103-4150	1	SEAL KIT, (includes items 1, 2, 3, 8 thru 13, 15 & 16)
1		2	WEAR RING
2		1	PISTON SEAL
3		1	O-RING
4	9103-4152	1	CASE ASSY, (includes item 6)
5	8867-1008	2	LUBE FITTING, STRAIGHT, 1/4-28
* 6	9140-4352	2	BUSHING
7	9103-4151	1	SHAFT ASSY, (includes item 6)
8		1	O-RING
9		1	WIPER
10		1	U-CUP
11		1	WEAR RING, (wide)
12		1	WEAR RING, (narrow)
13		1	NYLON PLUG
14	9103-4146	1	HEAD
15		1	BACK-UP RING
16		1	O-RING
17	9103-4149	1	PISTON, (lubricate and torque to 550 ft.lbs.)
18	9103-4155	2	SET SCREW
			NOTE: ONLY PART NUMBERED ITEMS ARE AVAILABLE FOR SERVICE REPLACEMENT.

** Revised part number on item 6.*

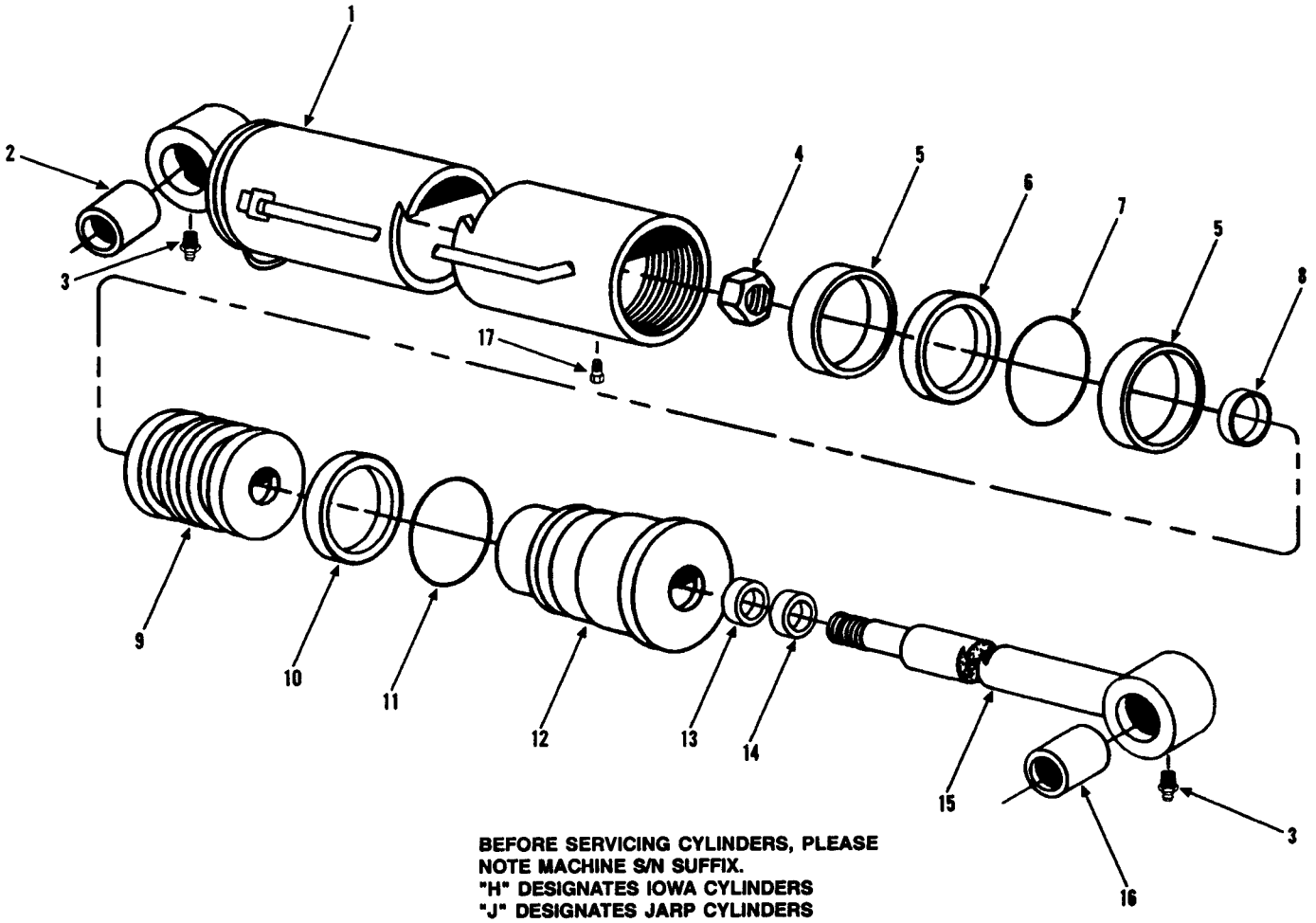

BEFORE SERVICING CYLINDERS, PLEASE NOTE MACHINE S/N SUFFIX.
"H" DESIGNATES IOWA CYLINDERS
"J" DESIGNATES JARP CYLINDERS
"S" DESIGNATES SEITZ CYLINDERS

Item	Part No.	Qty.	Description Of Part
	9104-3304	1	COMPENSATING CYLINDER ASSY, (includes all items)
	9103-4278	AR	SEAL KIT, (includes items 5, 6, 7, 8, 10, 11, 13 & 14)
1	9104-4313	1	TUBE ASSY, (includes item 2)
2	9108-4176	1	BUSHING
3	8867-1033	2	LUBE FITTING, STRAIGHT, 1/4-28
4	9103-4280	1	LOCKNUT, (torque to 1100 ft.lbs.)
5		2	WEAR RING
6		1	SEAL
7		1	O-RING
8		1	O-RING
9	9103-4281	1	PISTON
10		1	BACKUP RING
11		1	O-RING
12	9103-4314	1	GLAND
13		1	SEAL
14		1	WIPER
15	9104-4315	1	ROD ASSY, (includes item 16)
16	9108-4176	1	BUSHING
17	9103-4332	1	SET SCREW
			NOTE: ONLY ITEMS WITH PART NUMBERS ARE AVAILABLE FOR SERVICE.

HYDRAULIC COMPONENTS
(9104-3139) Sway Cylinder
Starting Serial No. 8644031G
Original Issue 8-87
Revised 7-16-99

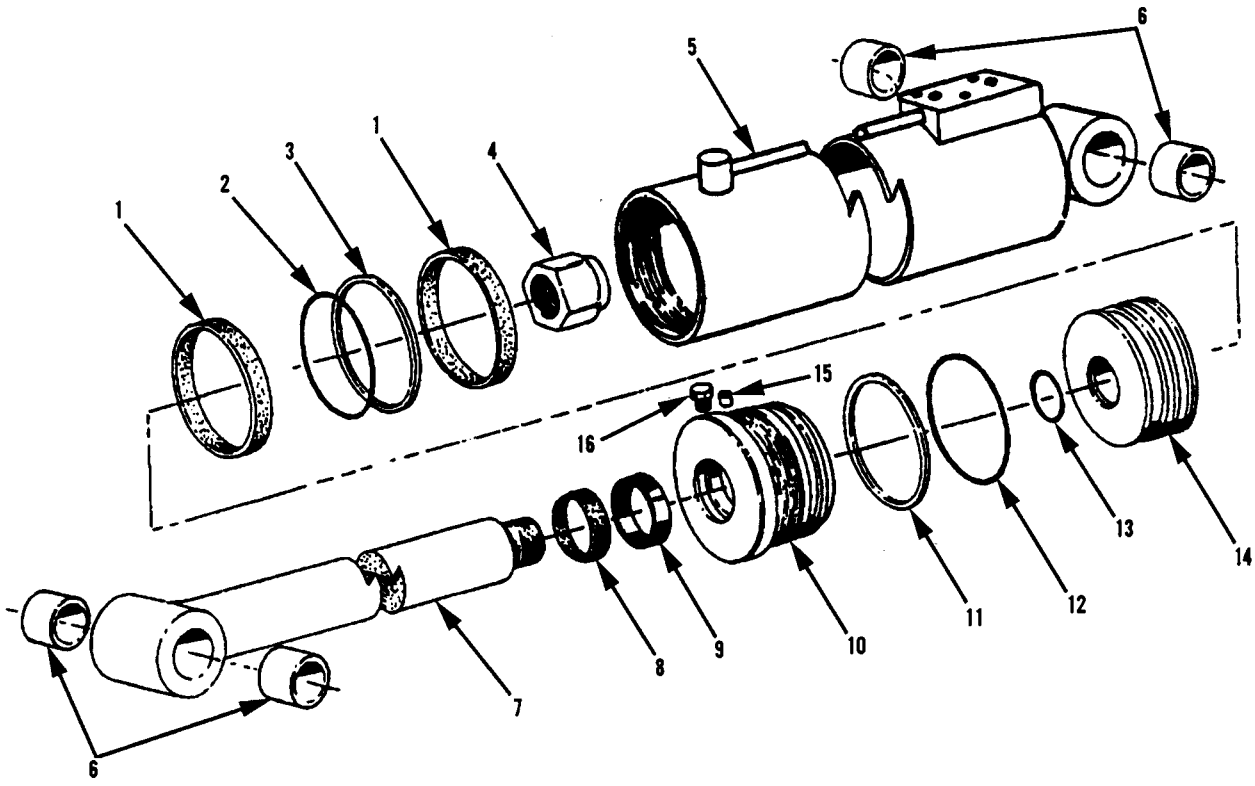

Item	Part No.	Qty.	Description Of Part
	9104-3139	1	SWAY CYLINDER ASSY (includes all items)
	9104-4205	1	SEAL KIT (includes items 1, 2, 3, 8, 9, 11, 12, 13 & 15)
1	9103-4040	2	WEAR RING
2	9103-4041	1	O-RING
3		1	PISTON SEAL
4	9104-4206	1	SELF-LOCKING NUT (lubricate & torque to 550-600 ft.lbs.)
5	9104-4207	1	CYLINDER BARREL ASSY (includes item 6)
6	9104-4075	4	BUSHING
7	9104-4208	1	PISTON ROD ASSY (includes item 6)
8	9103-4051	1	WIPER RING
9	9103-4052	1	ROD SEAL
*10	9040-0062	1	ROD BEARING (lubricate & torque to 250-300 ft.lbs.)
11	9103-4045	1	BACK-UP RING
12	9103-4046	1	O-RING
13	9104-4209	1	O-RING
14	9104-4210	1	PISTON ASSY (includes items 1, 2, 3 & 13)
15	9020-6042	1	NYLON PLUG
16	9104-4073	1	HEX HD CAPSCREW
			NOTE: ONLY ITEMS WITH PART NUMBERS ARE AVAILABLE FOR SERVICE.

SWAY CYLINDER

Starting Serial No. 8344001L
thru Serial No. 8644030G
Revised 7-16-99

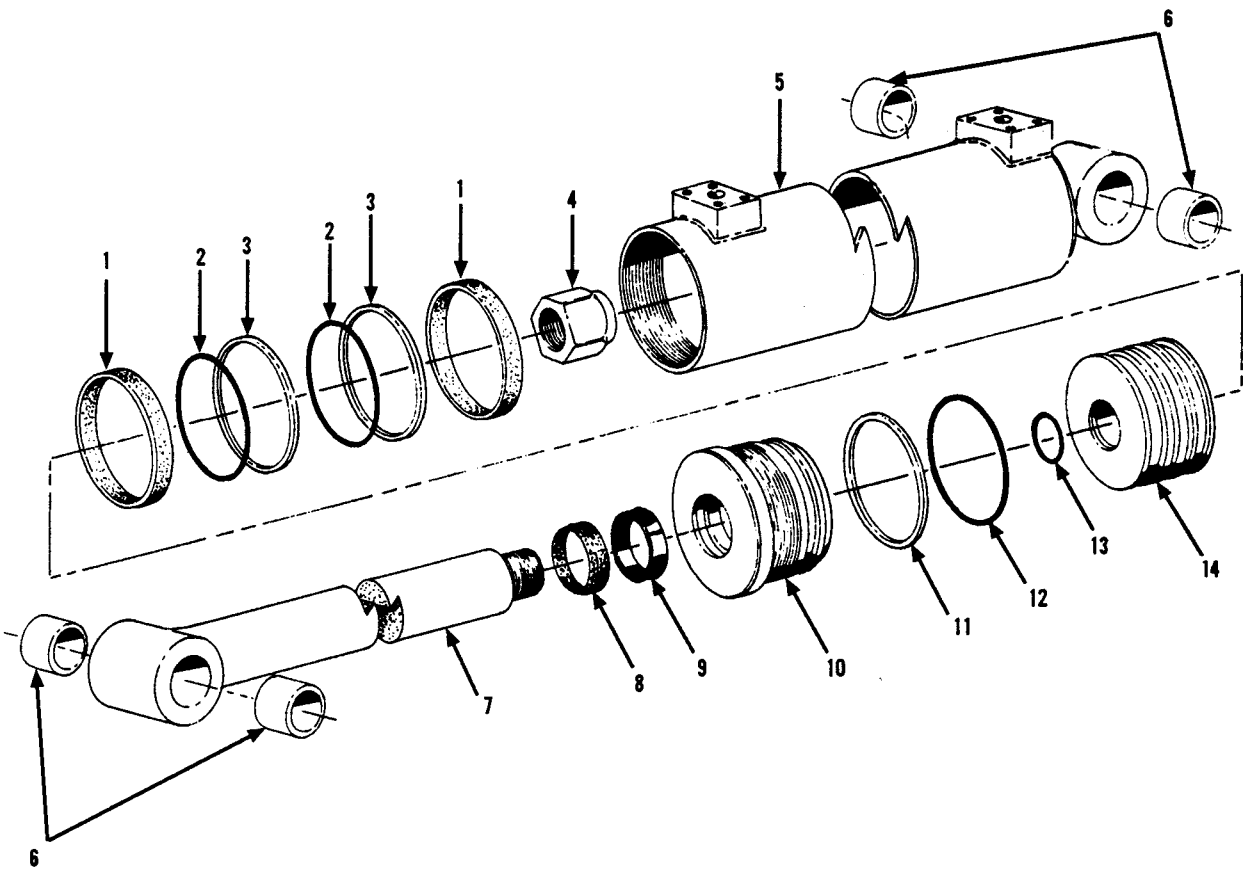

Item	Part No.	Qty.	Description Of Part
	9080-1270	1	SWAY CYLINDER
	9020-1553	AR	SEAL KIT (includes items 1, 2, 3, 8, 9, 11, 12, 13)
1	9002-2259	2	WEAR RING
2	9002-3153	2	PISTON O-RING
3	9002-2239	2	PISTON SEAL
4	9002-2232	1	SELF-LOCKING NUT
5	9020-7898	1	CYLINDER BARREL
6	9020-5414	4	BUSHING
7	9020-7900	1	PISTON ROD
8	9002-2279	1	WIPER RING
9	9002-2249	1	SEAL ROD
10	9040-0062	1	ROD BEARING
11	9002-5342	1	BACK-UP RING
12	9002-3342	1	ROD BEARING O-RING
13	9002-3128	1	PISTON ROD O-RING
14	9040-0061	1	PISTON

HYDRAULIC COMPONENTS
(9104-3205) (IOWA) Sway Cylinder
Starting Serial No. 0144293H
Original Issue 8-88
Revised 6-27-07

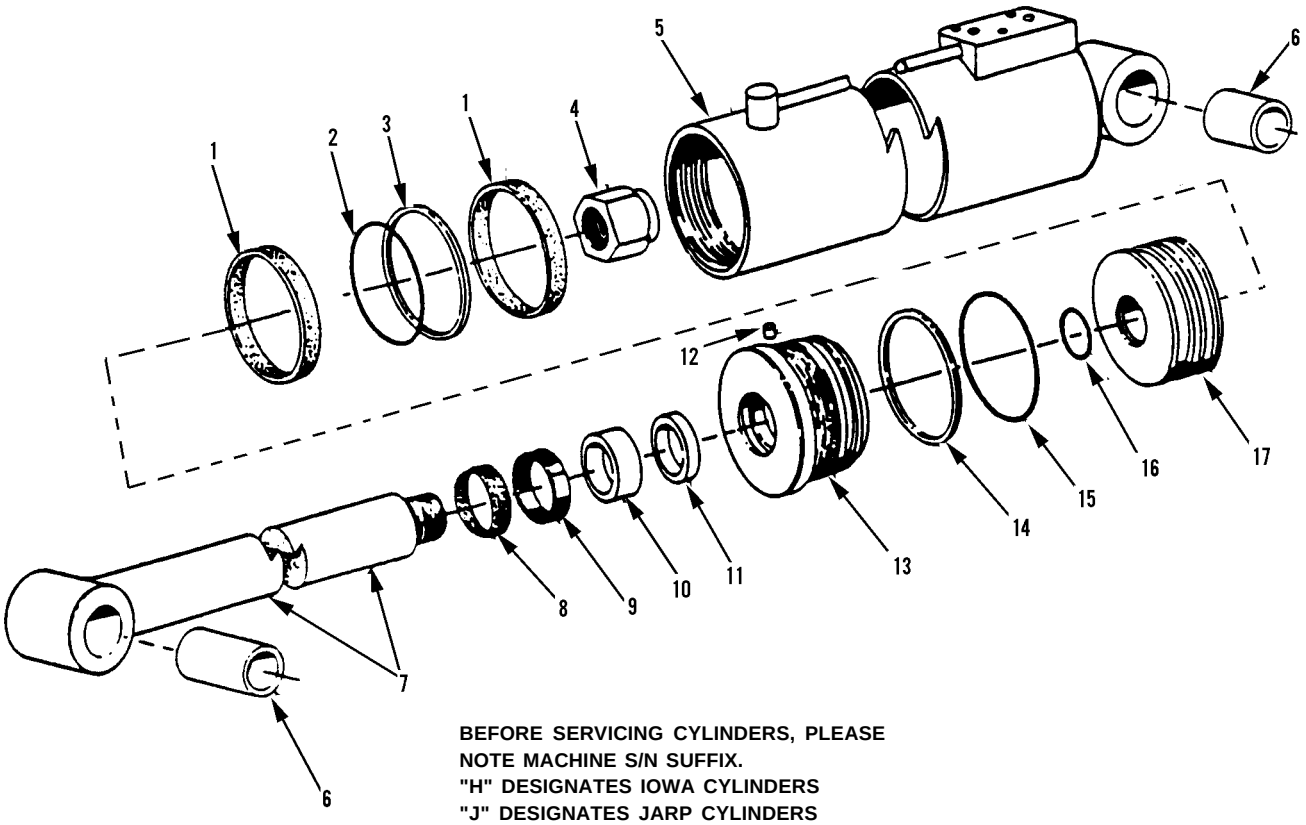

BEFORE SERVICING CYLINDERS, PLEASE NOTE MACHINE S/N SUFFIX.
"H" DESIGNATES IOWA CYLINDERS
"J" DESIGNATES JARP CYLINDERS
"S" DESIGNATES SEITZ CYLINDERS

Item	Part No.	Qty.	Description Of Part
	9104-3205	1	SWAY CYLINDER ASSY, (includes all items)
	9104-4275	1	SEAL KIT, (includes items 1, 2, 3, 8 thru 11, 14, 15 & 16)
1		2	WEAR RING
2		1	O-RING
3		1	PISTON SEAL
4	9106-4017	1	HEX LOCKNUT, (lubricate and torque to 625 ft.lbs.)
5	9104-4273	1	CASE ASSY, (includes item 6)
* 6	9140-4352	2	BUSHING
7	9104-4272	1	SHAFT ASSY, (includes item 6)
8		1	WIPER
9		1	U-CAP
10		1	WEAR RING, (wide)
11		1	WEAR RING, (narrow)
12		1	NYLON PLUG
13	9104-4271	1	HEAD
14		1	BACK-UP RING
15		1	O-RING
16		1	O-RING
17	9104-4274	1	PISTON
			NOTE: ONLY PART NUMBERED ITEMS ARE AVAILABLE FOR SERVICE REPLACEMENT.

** Revised part number on item 6.*

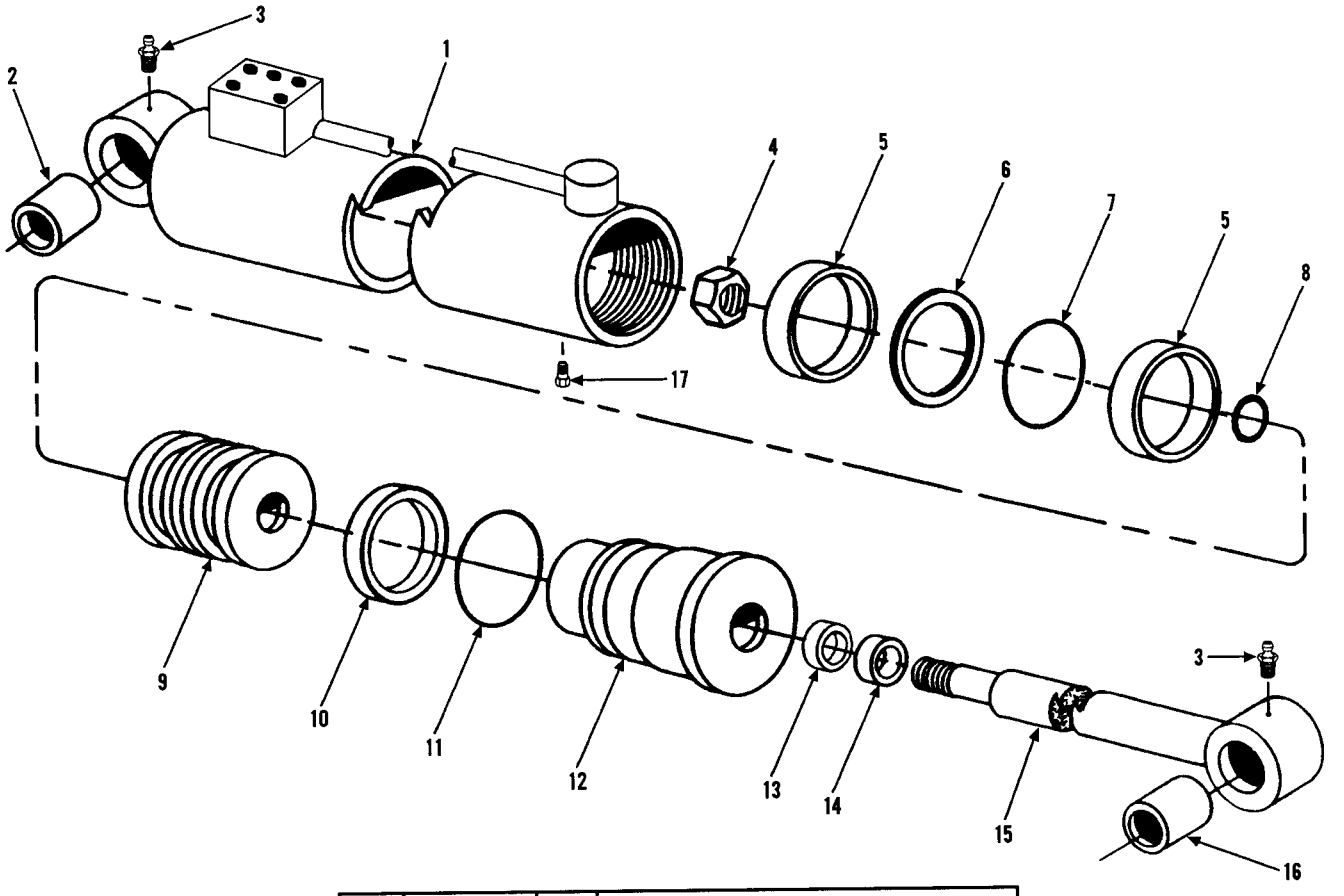

Item	Part No.	Qty.	Description Of Part
	9103-3367	1	SWAY CYLINDER ASSY, (includes all items)
	9103-4297	AR	SEAL KIT, (includes items 5, 6, 7, 8, 10, 11, 13, & 14)
1	9103-4298	1	TUBE ASSY, (includes item #2)
2	9108-4176	1	BUSHING
3	8867-1033	2	LUBE FITTING-STRAIGHT, 1/4-28
4	9103-4286	1	LOCKNUT, (torque to 590 ft. lbs.)
5		2	WEAR RING
6		1	SEAL
7		1	O-RING
8		1	O-RING
9	9103-4291	1	PISTON
10		1	BACKUP RING
11		1	O-RING
12	9103-4299	1	GLAND
13		1	SEAL
14		1	WIPER
15	9104-4300	1	ROD ASSY, (includes item 16)
16	9108-4176	1	BUSHING
17	9103-4332	1	SET SCREW
			NOTE: ONLY ITEMS WITH PART NUMBERS ARE AVAILABLE FOR SERVICE.

BEFORE SERVICING CYLINDERS, PLEASE NOTE MACHINE S/N SUFFIX.
"H" DESIGNATES IOWA CYLINDERS
"J" DESIGNATES JARP CYLINDERS
"S" DESIGNATES SEITZ CYLINDERS

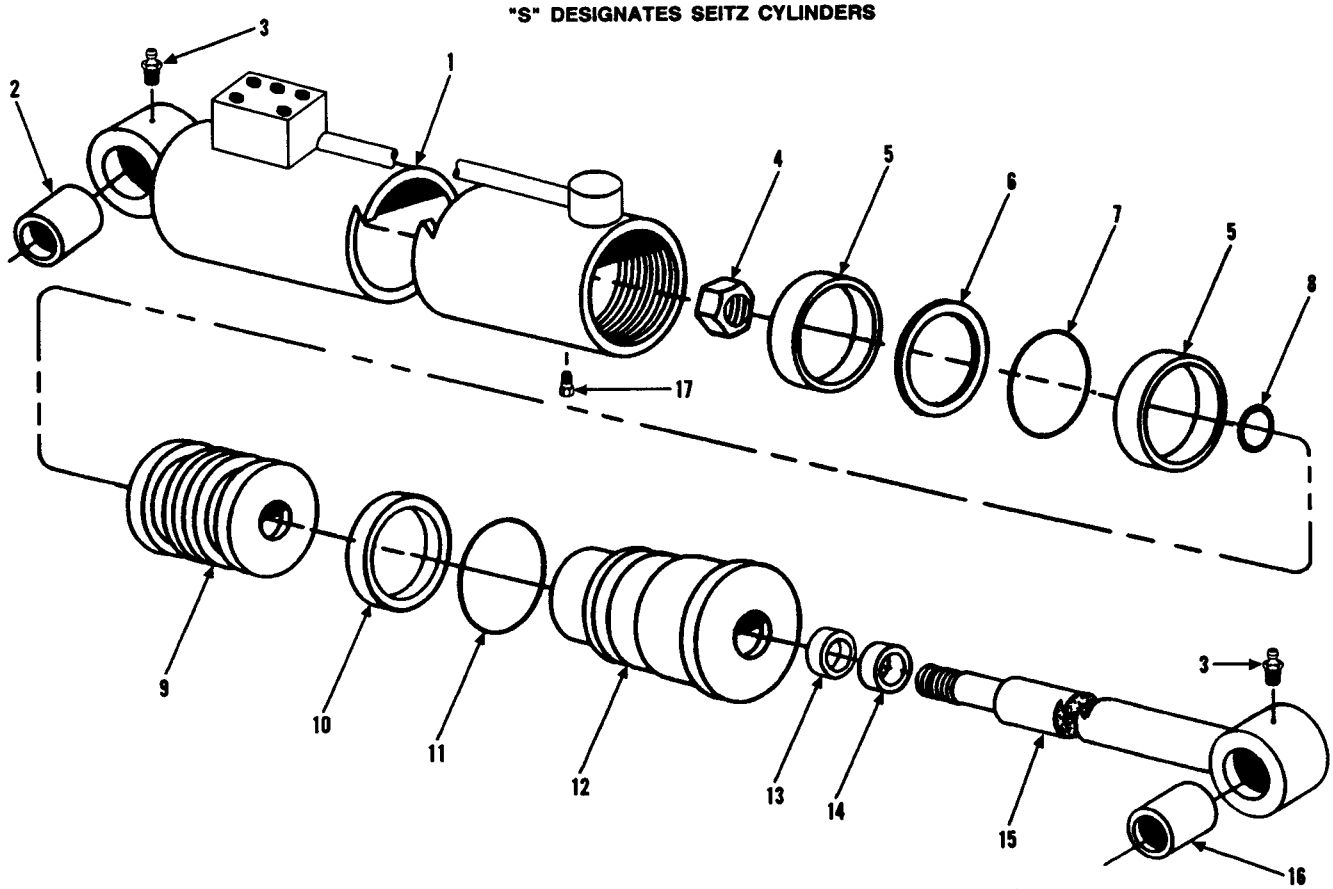

Item	Part No.	Qty.	Description Of Part
	9103-3367	1	SWAY CYLINDER ASSY, (includes all items)
	9103-4297	AR	SEAL KIT, (includes items 5, 6, 7, 8, 10, 11, 13, & 14)
1	9103-4298	1	TUBE ASSY, (includes item #2)
2	9108-4176	1	BUSHING
3	8867-1033	2	LUBE FITTING, STRAIGHT, 1/4-28
4	9103-4286	1	LOCKNUT, (torque to 590 ft. lbs.)
5		2	WEAR RING
6		1	SEAL
7		1	O-RING
8		1	O-RING
9	9103-4291	1	PISTON
10		1	BACKUP RING
11		1	O-RING
12	9103-4299	1	GLAND
13		1	SEAL
14		1	WIPER
15	9104-4300	1	ROD ASSY, (includes item 16)
16	9108-4176	1	BUSHING
17	9103-4332	1	SET SCREW
			NOTE: ONLY ITEMS WITH PART NUMBERS ARE AVAILABLE FOR SERVICE.

** Revised Starting Serial Number in upper right hand corner; added note to top of page.*

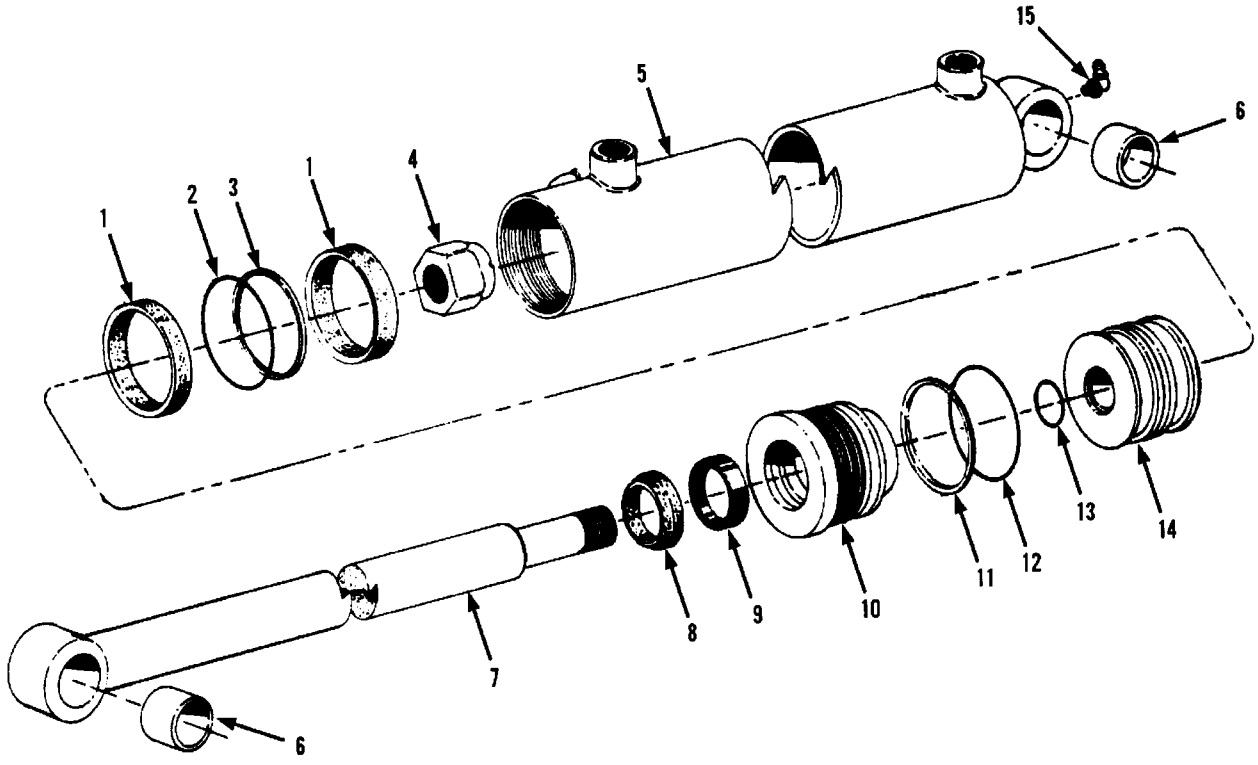

BEFORE SERVICING CYLINDERS, PLEASE NOTE MACHINE S/N SUFFIX.
"H" DESIGNATES IOWA CYLINDERS
"J" DESIGNATES JARP CYLINDERS
"S" DESIGNATES SEITZ CYLINDERS

Item	Part No.	Qty.	Description Of Part
	9080-1313	2	STEERING CYLINDER ASSY, (includes all items)
	9020-2551	AR	SEAL KIT, (includes items 1, 2, 3, 8, 9, 11, 12 & 13)
1	9002-2257	2	WEAR RING
2	9002-3145	1	O-RING
3	9002-2237	1	PISTON SEAL
4	9002-2230	1	SELF LOCKING NUT
5	9020-7821	1	BARREL
6	9020-5450	2	BUSHING
7	9020-7822	1	PISTON ROD
8	9002-2277	1	WIPER RING
9	9002-2247	1	ROD SEAL
10	9040-2099	1	ROD BEARING
11	9002-4232	1	BACK-UP RING
12	9002-3232	1	O-RING
13	9002-3117	1	O-RING
14	9040-2098	1	PISTON
*15	8867-1027	1	LUBE FITTING, 90 DEGREES, 1/4-28

** Revised part number on item 15.*

HYDRAULIC COMPONENTS
(9103-3291) (IOWA) Steering Cylinder
Starting Serial No. 0144293H
Original Issue 8-88
Revised 1-12-01

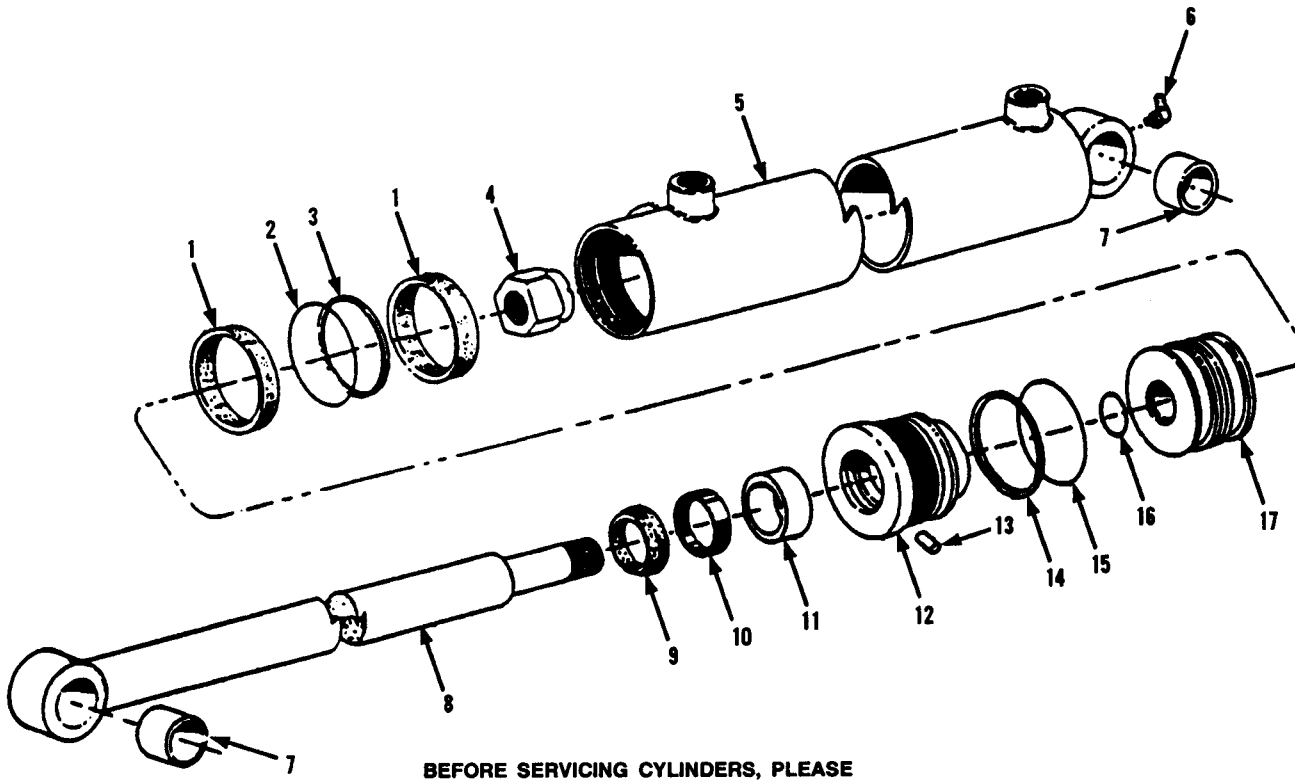

BEFORE SERVICING CYLINDERS, PLEASE NOTE MACHINE S/N SUFFIX.
"H" DESIGNATES IOWA CYLINDERS
"J" DESIGNATES JARP CYLINDERS
"S" DESIGNATES SEITZ CYLINDERS

Item	Part No.	Qty.	Description Of Part
	9103-3291	2	STEERING CYLINDER ASSY, (includes all items)
	9103-4145	1	SEAL KIT, (includes items 1, 2, 3, 9, 10, 11, 13, 14, 15 & 16)
1		2	WEAR RING
2		1	O-RING
3		1	PISTON SEAL
4	9103-4156	1	HEX LOCKNUT, (lubricate & torque to 250 ft.lbs.)
5	9103-4143	1	CASE ASSY, (includes item 7)
6	8867-1027	1	LUBE FITTING, 90DEGREES, 1/4-28
7	9103-4157	2	BUSHING
8	9103-4142	1	SHAFT ASSY, (includes item 7)
9		1	WIPER
10		1	U-CUP
11		1	WEAR RING
12	9103-4141	1	HEAD
13		1	NYLON PLUG
14		1	BACK-UP RING
15		1	O-RING
16		1	O-RING
17	9103-4144	1	PISTON
			NOTE: ONLY PART NUMBERED ITEMS ARE AVAILABLE FOR SERVICE REPLACEMENT.

** Revised note above parts list.*

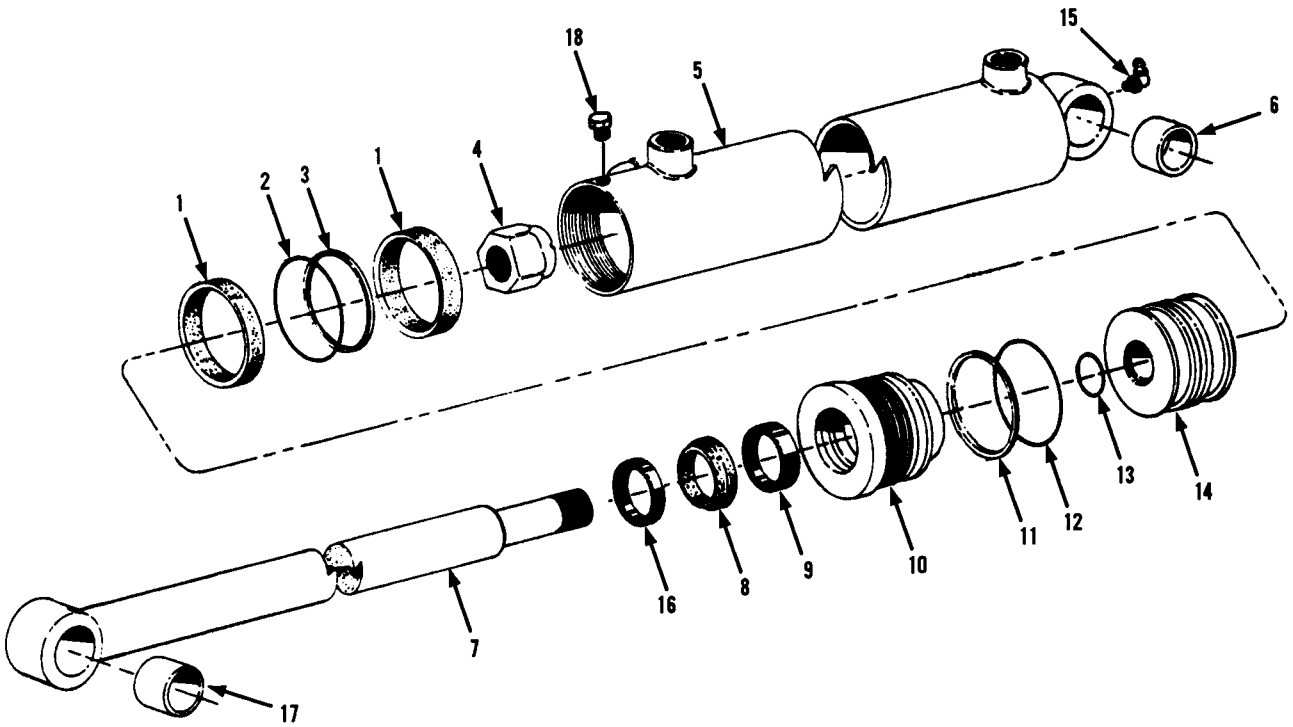

Item	Part No.	Qty.	Description Of Part
	9045-3034	2	STEERING CYLINDER ASSY (includes all items)
	9114-4006	AR	SEAL KIT (includes items 1, 2, 3, 8, 9, 11, 12, 13, & 16)
1	9116-4019	2	WEAR RING
2	9116-4020	1	O-RING
3	9116-4021	1	PISTON SEAL
4	9114-4038	1	SELF LOCKING NUT
5	9103-4435	1	BARREL
6	9103-4157	1	BUSHING
7	9103-4436	1	PISTON ROD
8	9120-4469	1	WIPER RING
9	9120-4468	1	U-CUP
10	9114-4040	1	HEAD (lubricate & torque 100-400 ft.lbs.)
11	9116-4024	1	BACK-UP RING
12	9103-4437	1	O-RING
13	9116-4022	1	O-RING
14	9114-4039	1	PISTON
15	9114-4125	1	LUBE FITTING-90 DEGREES-1/4-28
16	9116-4025	1	STEP SEAL
17	9112-4087	1	BUSHING
18	9112-4096	1	SET SCREW

OPTIONAL EQUIPMENT
(9103-3366) Swing Cylinder Assembly
Starting Serial No. 0144752
Original Issue 11-00

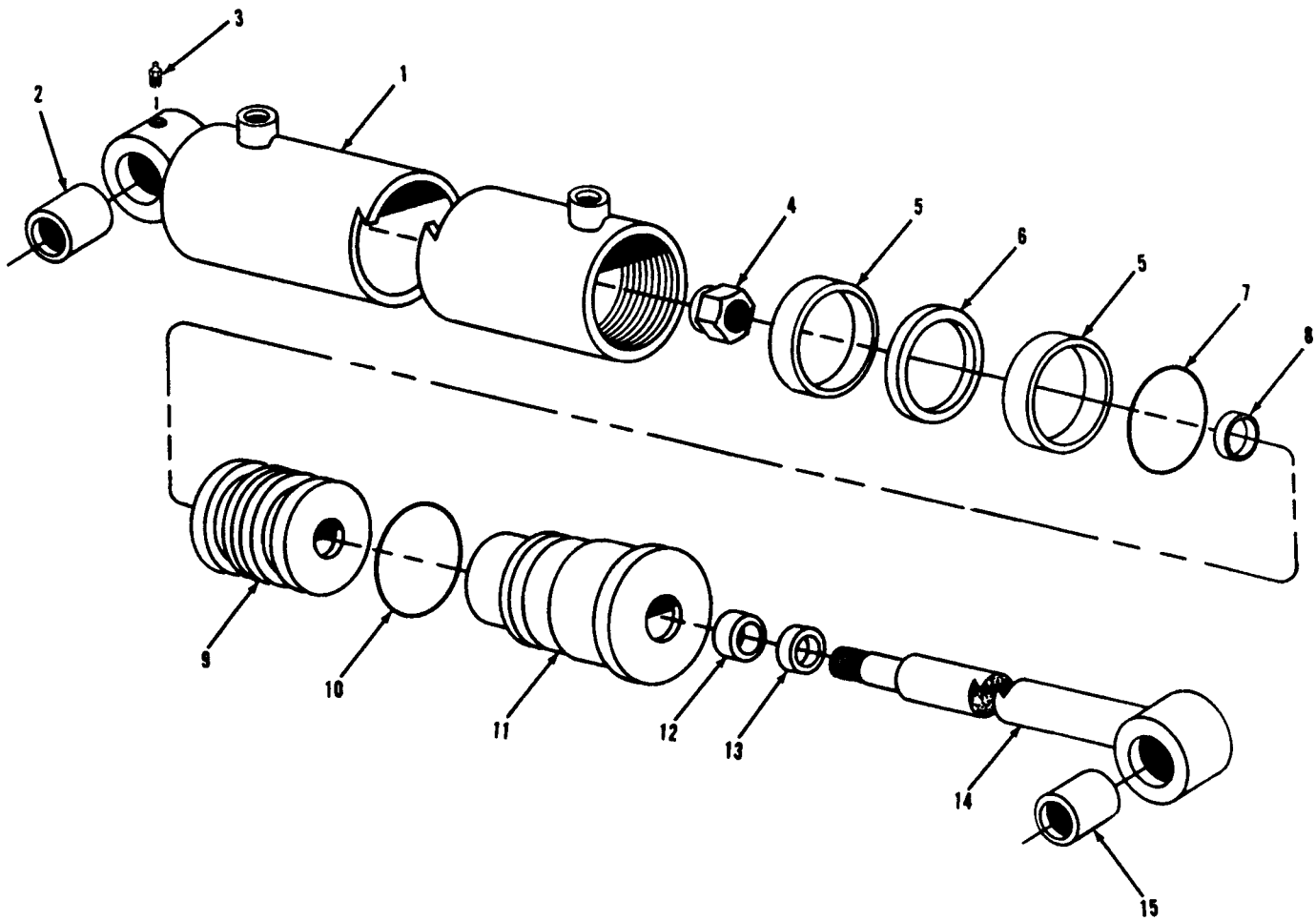

Item	Part No.	Qty.	Description Of Part
	9103-3366	2	SWING CYLINDER ASSY, (includes all items)
	9103-4301	Ref	SEAL KIT, (includes items 5,6,7,8,10, 12, & 13)
1	9103-4302	1	TUBE ASSY
2	9108-4194	1	BUSHING
3	8867-1033	1	LUBE FITTING-STRAIGHT, 1/4-28
4	9103-4303	1	LOCKNUT, (torque to 235 ft. lbs.)
5	9104-4463	2	WEAR RING
6	9104-4464	1	SEAL
7	9104-4465	1	O-RING
8	9104-4466	1	O-RING
9	9103-4304	1	PISTON
10	9104-4467	1	O-RING
11	9103-4305	1	GLAND
12	9104-4468	1	SEAL
13	9104-4469	1	WIPER
14	9103-4306	1	ROD ASSY
15	9104-4470	1	BUSHING

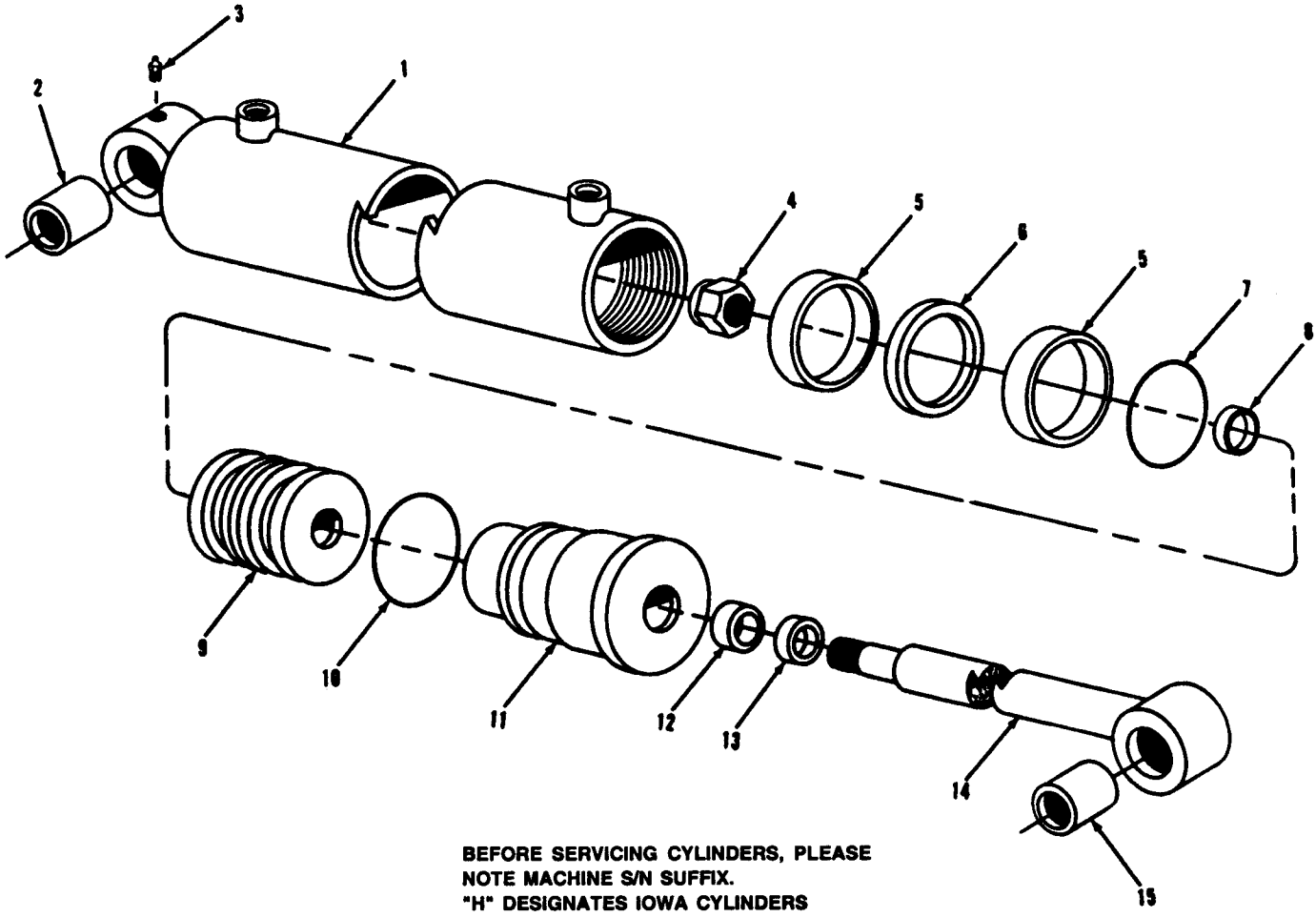

BEFORE SERVICING CYLINDERS, PLEASE NOTE MACHINE S/N SUFFIX.
"H" DESIGNATES IOWA CYLINDERS
"J" DESIGNATES JARP CYLINDERS
"S" DESIGNATES SEITZ CYLINDERS

Item	Part No.	Qty.	Description Of Part
*	9103-3366	2	STEERING CYLINDER ASSY, (includes all items)
	9103-4301	Ref	SEAL KIT, (includes items 5, 6, 7, 8, 10, 12 & 13)
1	9103-4302	1	TUBE ASSY
2	9108-4194	1	BUSHING
3	8867-1033	1	LUBE FITTING, STRAIGHT, 1/4-28
4	9103-4303	1	LOCKNUT, (torque to 235 ft.lbs.)
5	9104-4463	2	WEAR RING
6	9104-4464	1	SEAL
7	9104-4465	1	O-RING
8	9104-4466	1	O-RING
9	9103-4304	1	PISTON
10	9104-4467	1	O-RING
11	9103-4305	1	GLAND
12	9104-4468	1	SEAL
13	9104-4469	1	WIPER
14	9103-4306	1	ROD ASSY
15	9104-4470	1	BUSHING

** Revised upper right hand corner & description on 9103-3366; added note above parts list.*

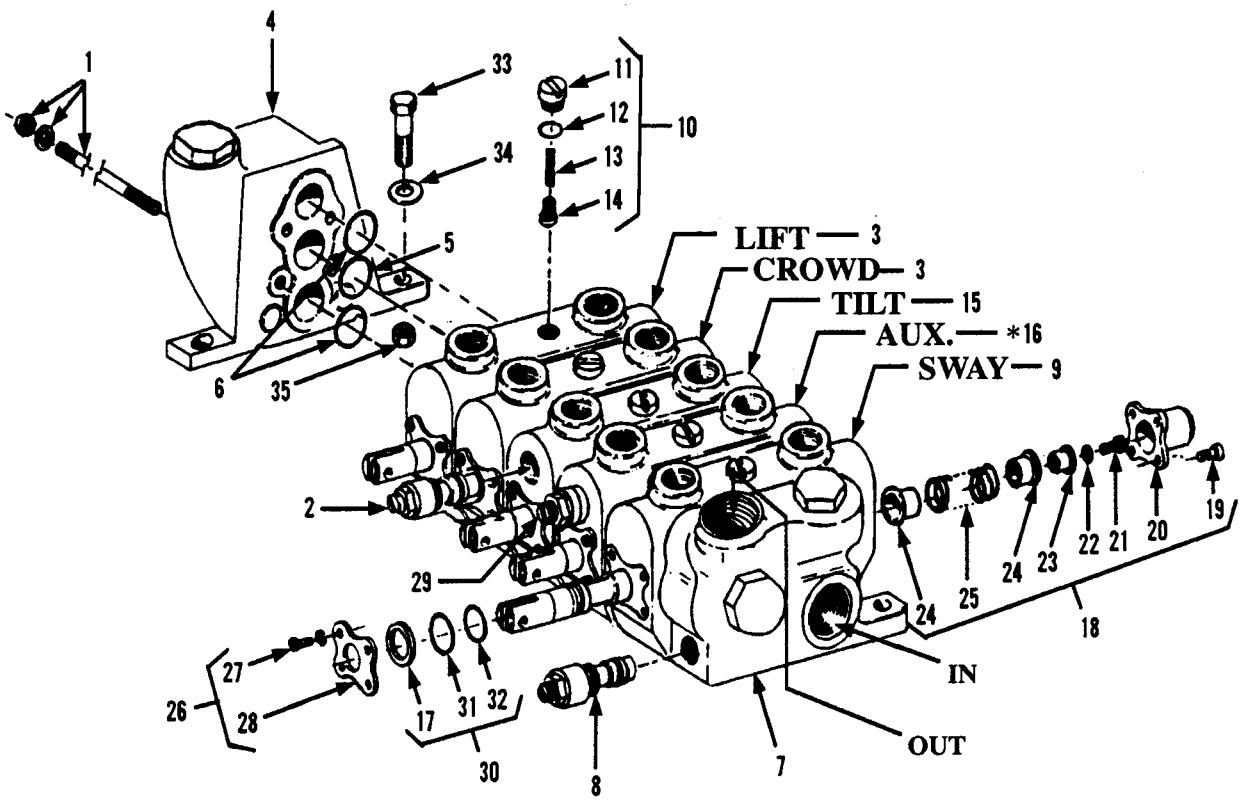

* 9103-3168 VALVE DOES NOT INCLUDE AUXILIARY VAVLE SECTION. ORDER KIT #9103-3239 FOR THE SECTION, O-RINGS, AND STUDS

Item	Part No.	Qty.	Description Of Part
	9103-3168		CONTROL VALVE (4 section)
	9103-3296		CONTROL VALVE (5 section)
1	9103-4105		STUD ASSY KIT (4 section)
	9103-4070		STUD ASSY KIT (5 section)
2	9020-6415	1	POST RELIEF
	9103-4237	AR	SEAL KIT
3	9103-4102	2	VALVE SECTION (includes 10 thru 14)
4	9103-4104	1	COVER PLATE ASSY (right end)
5	9020-6422	1	O-RING
6	9020-6423	2	O-RING
7	9104-4114	1	COVER PLATE ASSY (left end) (includes item 8)
8	9020-8136	1	MAIN RELIEF VALVE ASSY (3000 PSI)
	9103-4236	AR	SEAL KIT
9	9020-6421	1	VALVE SECTION (includes 10 thru 14)
10	9020-6413	AR	LOAD CHECK POPPET ASSY (includes items 11 thru 14)
11		1	LOAD CHECK PLUG
12		1	O-RING
13		1	SPRING
14		1	POPPET
15	9020-6420	1	VALVE SECTION (with port relief) (includes item 21)
16	9103-4072	1	VALVE SECTION (includes item 29)

Item	Part No.	Qty.	Description Of Part
17	9020-6418	AR	SEAL PLATE
18	9020-6427	AR	NEUTRAL POSITIONER (consists of items 19 thru 25)
19	8830-1548	4	FILLISTER HD MACHINE SCREW 14-20x1
20	9020-6431	1	BONNET
21	8821-1069	1	SOCKET HD CAPSCREW, 3/8-16x3/4, GR8
22	8855-1011	1	LOCKWASHER, 3/8
23	9020-6430	1	SPOOL COLLAR
24	9020-6428	2	STOP COLLAR
25	9020-6429	1	SPRING
26	9020-6419	AR	RETAINER PLATE KIT (consists of items 27 & 28)
27		1	SCREW
28		1	RETAINER PLATE
29	9103-4074	1	PORT RELIEF
30	9103-4159	AR	SPOOL SEAL KIT (consists of items 17, 31 & 32)
31		1	O-RING
32		1	O-RING
33	8820-1072	3	HEX HD CAPSCREW, 1/4-20x1-3/4, GR5
34	8856-1107	3	FLAT WASHER, 1/4
35	8850-1008	3	HEX NUT, 1/4
36	9020-6417	AR	SECTION SEAL KIT (consists of items 5, 6, 12, 17, 31 & 32)
			NOTE: ONLY PART NUMBERED ITEMS ARE AVAILABLE FOR SERVICE REPLACEMENT.

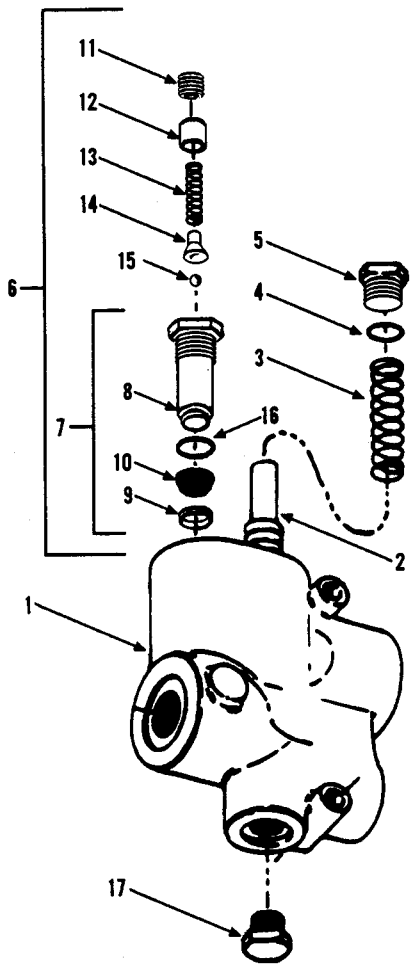

Item	Part No.	Qty.	Description Of Part
	9103-3240	1	PRIORITY VALVE (includes all items) 2500 P.S.I. RELIEF SETTING
1	9020-6548	1	HOUSING (includes item 2)
2	9020-6549	1	SPOOL
3	9020-6550	1	SPRING
4	8859-1206	1	O-RING
5	9020-6552	1	PLUG
6	9020-6553	1	RELIEF CARTRIDGE (includes items 7 thru 16)
7	9020-6554	1	RELIEF VALVE SUB BODY (inlcudes item 8 thru 10)
8	9020-6555	1	BODY
9	9020-6556	1	RING
10	9020-6557	1	SCREEN
11	9020-6558	1	RELIEF VALVE ADJUSTING SCREW
12	9020-6559	1	SPRING GUIDE
13	9020-6560	1	SPRING
14	9020-6561	1	BALL HOLDER
15	9020-6562	1	BALL
16	8859-1205	1	O-RING
17	9020-6564	1	PLUG

FOWARD-REVERSE CONTROL

Starting Serial No. 8344001L
Revised 7-16-99
Revised 10-17-03

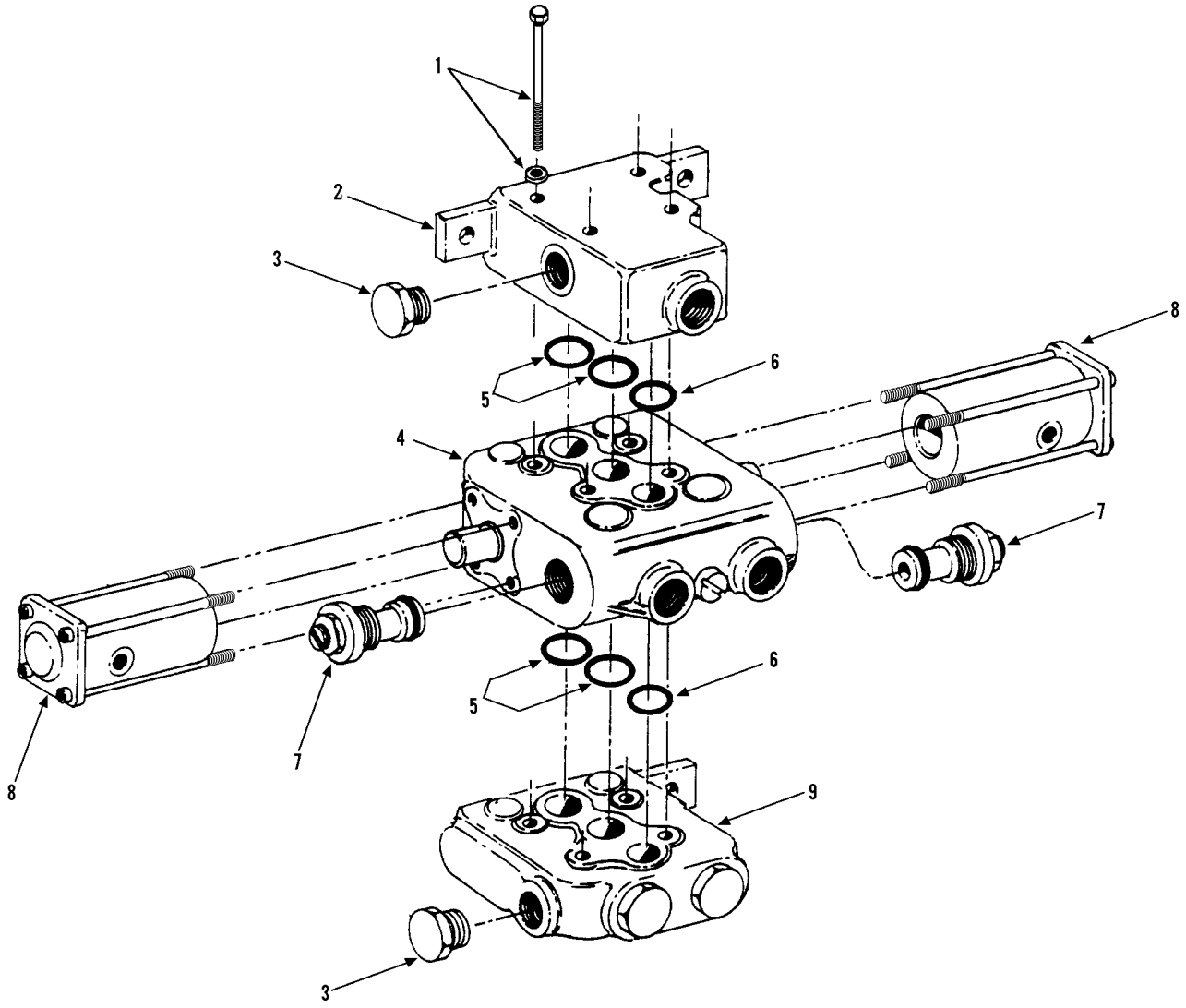

Item	Part No.	Qty.	Description Of Part
	9020-6737	1	FOWARD REVERSE CONTROL VALVE, (includes all items)
1	9002-6155	4	HEX HD CAPSCREW, 3/8-16 x 5
	8855-1011	4	LOCKWASHER, 3/8
2	9020-8137	1	OUTLET SECTION
3	8866-2180	2	HEX HD PLUG, (includes o-ring)
	8859-1210	2	O-RING
* 4	9020-8191	1	WORK SECTION
5	9020-6423	4	O-RING
6	9020-6422	2	O-RING
7	9020-8139	2	PORT RELIEF CARTRIDGE, (two backup & one o-ring)
8	9020-8140	2	REMOTE HYDRAULIC ACTUATOR
9	9020-8141	1	INLET SECTION
10	9103-3040		PLUG, (not shown), (replaces anticavitation check)

** Changed part number on item 4.*

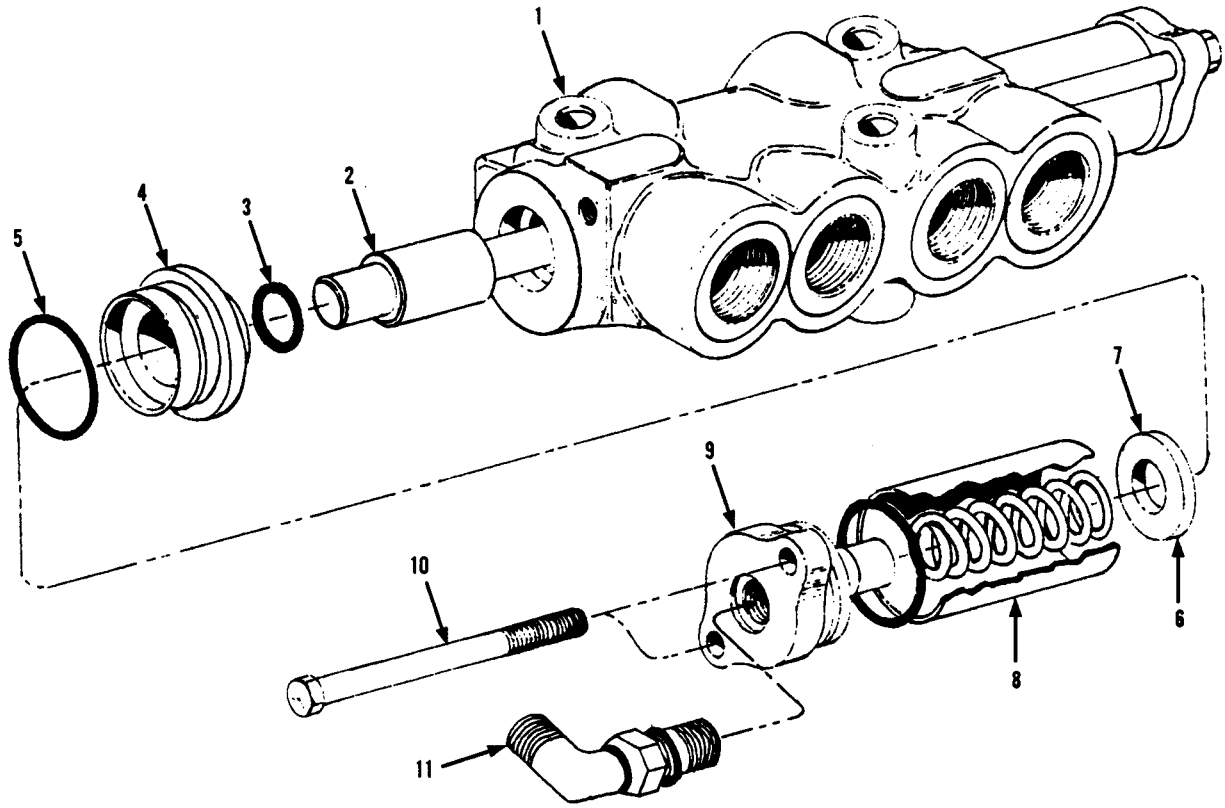

Item	Part No.	Qty.	Description Of Part
	9020-6738	1	SERIES PARALLEL VALVE
1	NSS	1	- HOUSING
2	NSS	1	- SPOOL
3	9020-8060	2	- O-RING
4	9020-8058	2	- PLUG
5	9020-8065	4	- O-RING
6	9020-8062	2	- SPACER
7	9020-8064	2	- SPRING
8	9020-8061	2	- TUBE
9	9020-8059	2	- CAP
10	9020-8063	4	- SCREW
11	8866-2064	2	ELBOW - 90 DEGREES (includes o-ring)
	8859-1204	2	O-RING

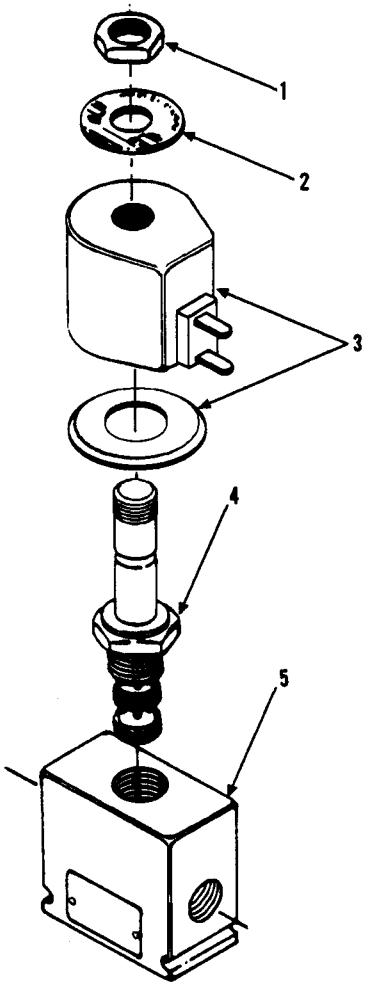

Item	Part No.	Qty.	Description Of Part
	9020-6739	1	SOLENOID VALVE ASSY, THREE WAY- TWO POSITION (includes all items)
	9104-4001	1	SEAL KIT
1	9020-8066	1	NUT
2	9020-8067	1	NAME PLATE
3	7738-4267	1	SOLENOID COIL ASSY
4	9020-8071	1	VALVE ASSY
5	9020-8072	1	VALVE BODY

REAR DRIVE MAIN RELIEF

Starting Serial No. 8344001L
thru Serial No. 8744114G
Excluding Serial No. 8744079G
Revised 7-16-99

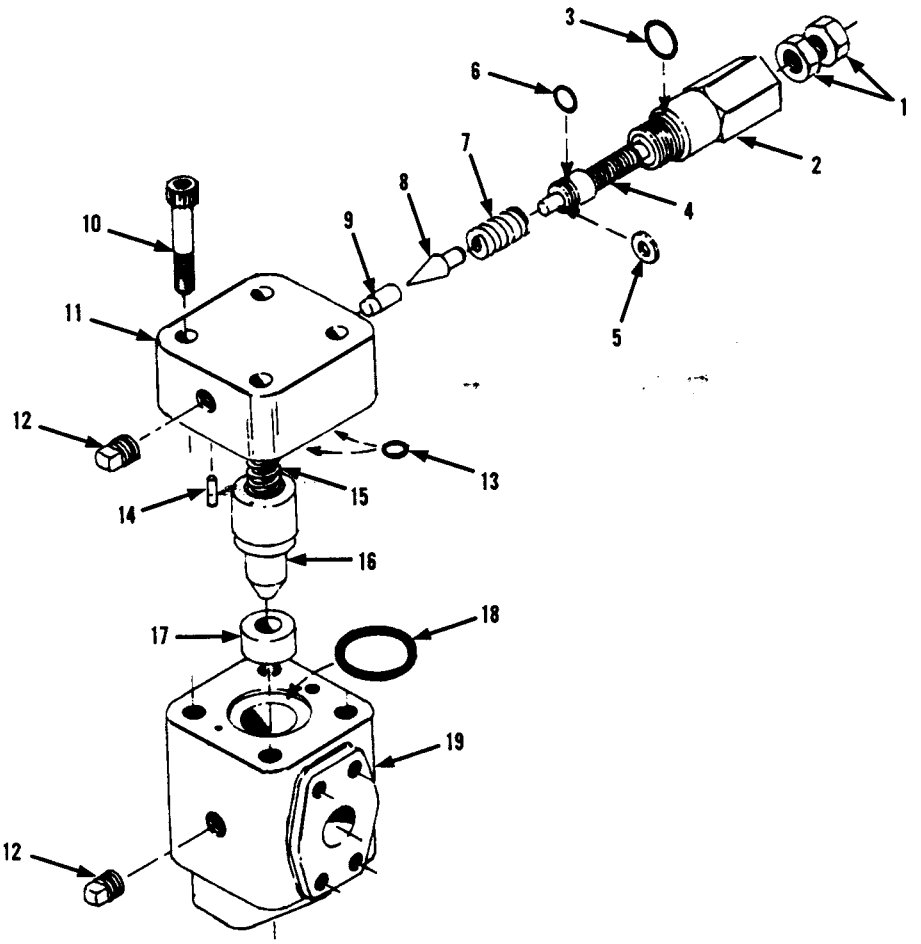

Item	Part No.	Qty.	Description Of Part
	9020-7314		REAR DRIVE MAIN RELIEF VALVE (includes items 1 thru 19)
1	8850-1406	2	HEX JAM NUT, 3/8-24
2	9020-8040	1	HEAD
3	9020-8041	1	O-RING
4	9020-8042	1	ADJUSTING SCREW
5	9020-8043	1	SHIM
6	9020-8044	1	O-RING
7	9020-8045	1	SPRING
8	9020-8046	1	CONE
9	9020-8047	1	SEAT
10	9020-8048	1	SCREW
11	9020-8049	1	CAP
12	9002-7462	2	PIPE PLUG
13	9020-8050	1	O-RING
14	9020-8051	1	PIN
15	9020-8052	1	SPRING
16	9020-8053	1	PISTON
17	9020-8054	1	SEAT
18	9020-8055	1	O-RING
19	9020-8056	1	VALVE BODY
20	9020-8057	AR	SEAL KIT (consists of items 3, 6, 13 & 18)

CROSSOVER RELIEF VALVE

Starting Serial No. 8344001L
Revised 7-16-99

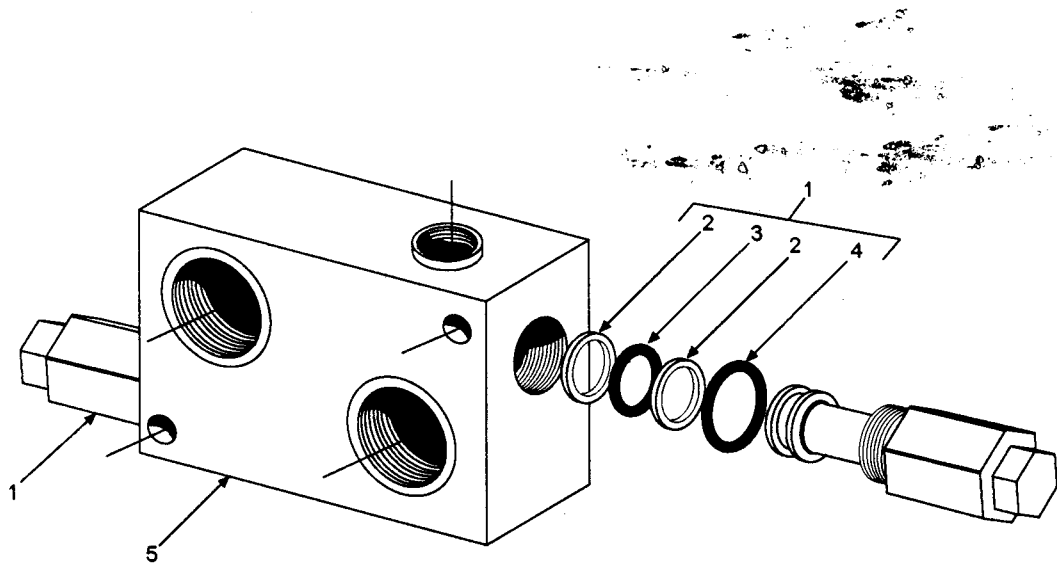

Item	Part No.	Qty.	Description Of Part
	9060-2706	1	CROSSOVER RELIEF VALVE (includes all items)
1	9020-3440	2	RELIEF CARTRIDGE (with seals)
2	9020-3437	4	BACK-UP RING (2 per cartridge)
3	9020-3438	2	O-RING (1 per cartridge)
4	9020-3439	2	O-RING (1 per cartridge)
5	NSS	1	BODY

PUMP-MAIN HYDRAULIC

Starting Serial No. 8344001L
REVISED 7-16-99

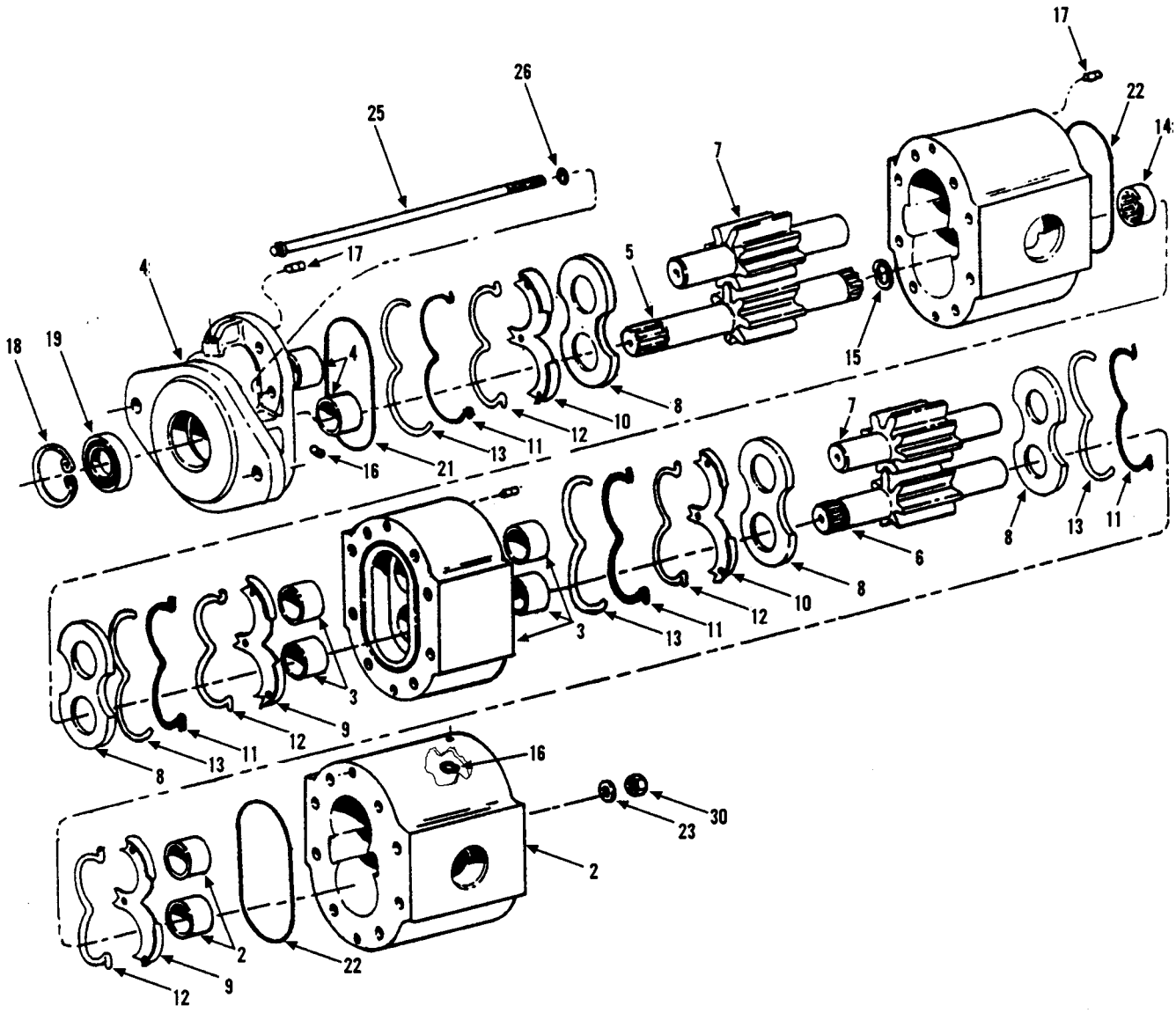

Item	Part No.	Qty.	Description Of Part
	9020-7615		MAIN HYDRAULIC PUMP (includes all items)
1	9020-8026	1	FRONT GEAR BODY(includes bushings)
2	9020-2417	1	REAR GEAR BODY (includes bushings)
3	9020-2419	1	BRG. PLATE (includes bushings)
4	9104-4211	1	FLANGE
5	9020-8030	1	DRIVE GEAR (front)
6	9020-2416	1	DRIVE GEAR(rear)
7	9020-2415	2	IDLER GEAR
8	9104-4220	4	PRESSURE PLATE
9	9020-2406	2	ISOLATION PLATE (top)
10	9020-2407	2	ISOLATION PLATE (bottom)
11	9020-2403	4	O-RING SEAL
12	9020-2405	4	RETAINER RING

Item	Part No.	Qty.	Description Of Part
13	9020-2404	4	BACK-UP RING
14	9104-4218	1	SPLINE COUPLING
15	9020-2402	1	SNAP RING
16	9020-2435	2	BALL, 1/4"
17	9020-2376	6	DOWEL
18	9020-2371	1	SEAL
19	9020-2372	1	SNAP RING
20	9020-2398	8	HEX NUT, 1/2-20
21	9020-2379	1	O-RING
22	9020-2396	2	O-RING
23	9104-4222	1	FLAT WASHER
24	9104-4213	1	PLUG (not shown)
25	9020-8038	8	STUD
26	9020-2383	8	O-RING

PUMP- PILOT

Starting Serial No. 8344001L
thru Serial No. 8444490
Wauhesha Engine Only
Revised 7-16-99

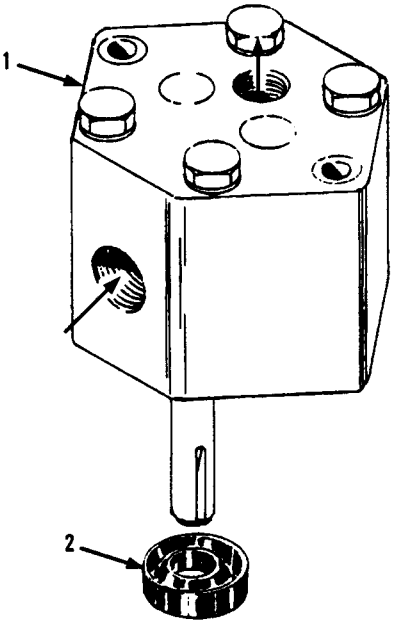

Item	Part No.	Qty.	Description Of Part
1	9040-3305	1	AUXILIARY HYDRAULIC PUMP
2	9020-8039	1	SEAL

PILOT PUMP

Starting Serial No. 8444491G
Original Issue 9086
Revised 7-16-99

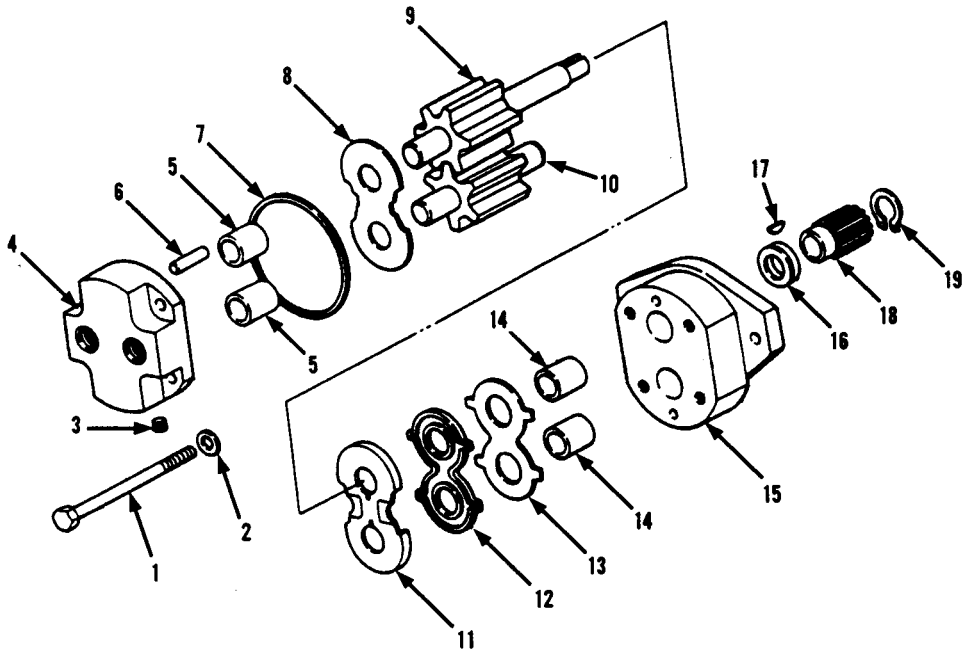

Item	Part No.	Qty.	Description Of Part
	9103-3122	1	PILOT PUMP ASSY (includes all items)
	9103-4019	1	SEAL KIT (includes items 7, 12, 13, 16 & 17)
1	8820-1038	4	HEX HD CAPSCREW, 3/8-16X1-3/4, GR5 (lubricate and torque to 34-38 ft. lbs.)
2	9103-4058	4	WASHER
3	9103-4059	1	PIPE PLUG
4	9103-4060	1	REAR COVER ASSY (includes item 5)
5	9103-4061	2	SLEEVE BEARING
6	9103-4062	2	DOWEL PIN
7		1	SQUARE CUT RING
8	9103-4063	1	THRUST PLATE (install with bronze side facing gear)
9	9103-4064	1	DRIVE GEAR
10	9103-4065	1	DRIVEN GEAR
11	9103-4066	1	WEAR PLATE
12		1	LOADING SEAL SPACER
13		1	LOADING SEAL
14	9103-4061	2	SLEEVE BEARING
15	9103-4067	1	BODY ASSY (includes item 14)
16		1	SHAFT SEAL
17		1	WOODRUFF KEY
18	9103-4068	1	DRIVE COUPLING
19	9103-4069	1	EXTERNAL RETAINING RING
			NOTE: ONLY PART NUMBERED ITEMS ARE AVAILABLE FOR SERVICE.

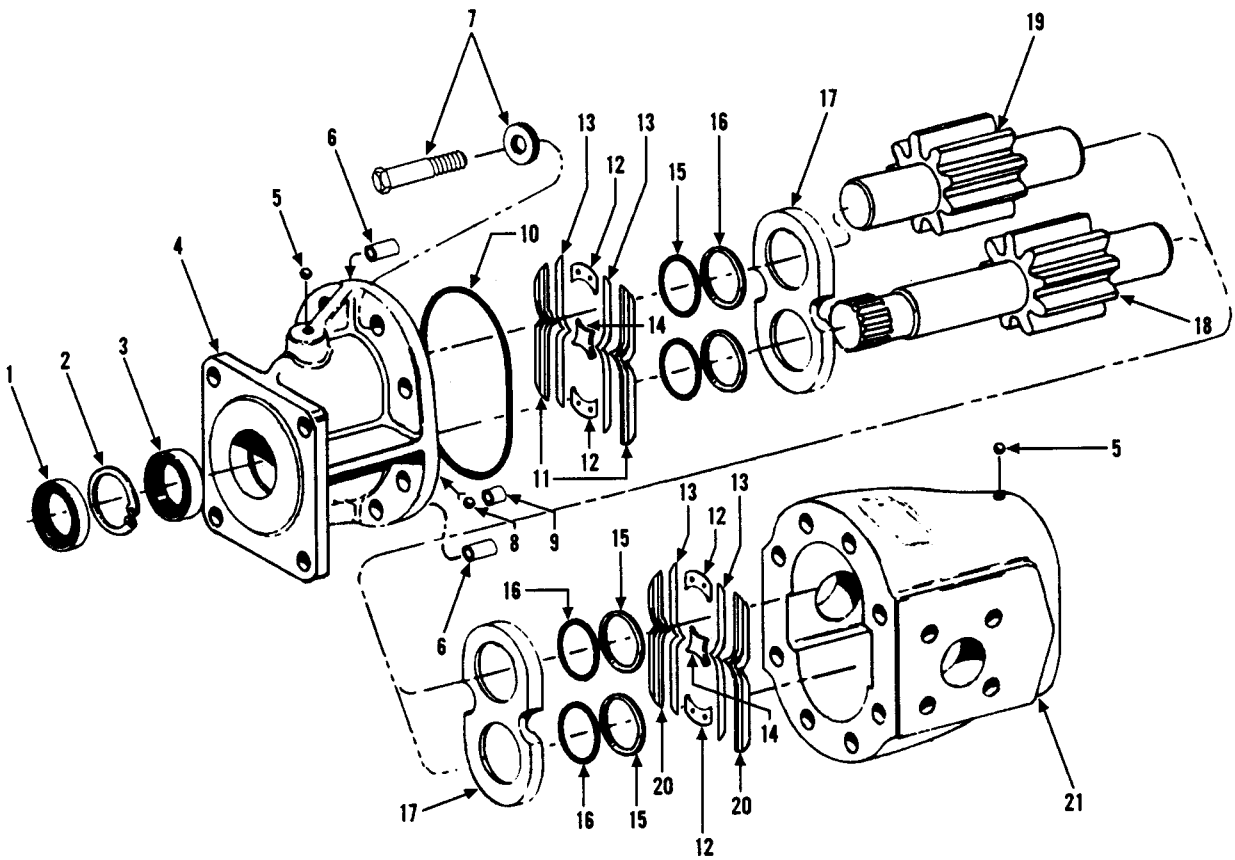

Item	Part No.	Qty.	Description Of Part
	9020-6748		REAR DRIVE MOTOR (includes all items)
1	9020-2371	1	SHAFT SEAL (outer)
2	9020-2372	1	SNAP RING
3	9020-5716	1	SHAFT SEAL (inner)
4	9020-8193	1	FLANGE (with bushings)
5	9020-2435	2	BALL, 1/4"
6	9020-2376	2	DOWEL
7	9002-7736	8	HEX HD CAPSCREW, 1/2-13x1-1/4 GR8
	9104-4222	8	WASHER
8	9020-2377	2	CHECK BALL, 1/2"
9	9020-2378	2	CHECK BALL RETAINER
10	9020-2379	1	O-RING
11	9020-2390	2	TOP ISOLATION PLATE
12	9020-2391	4	END SEPARATOR
13	9020-2393	4	SEALING STRIP
14	9020-2392	2	CENTER SEPERATOR
15	9020-8194	4	O-RING
16	9020-2381	4	BACK-UP RING
17	9020-2382	2	PRSSSURE PLATE
18	9020-8196	1	DRIVE GEAR
19	9020-8197	1	IDLER GEAR
20	9020-2389	2	BOTTOM ISOLATION PLATE
21	9020-8198	1	BODY (with bushings)

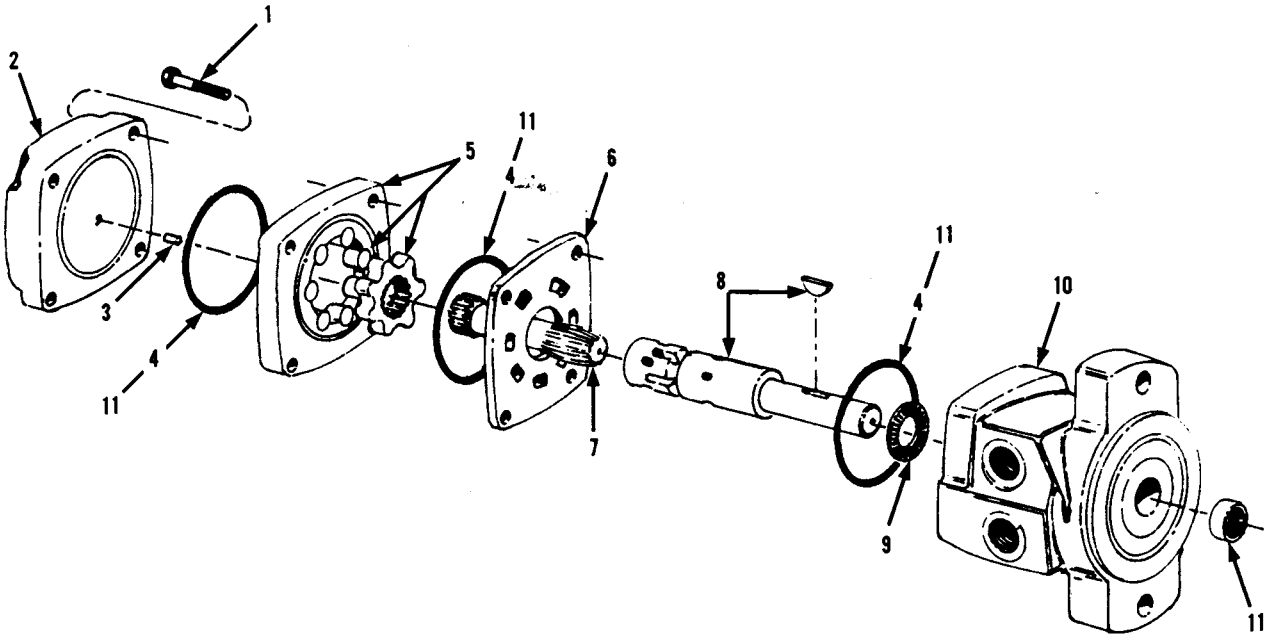

Item	Part No.	Qty.	Description Of Part
	9020-7879	1	WINCH MOTOR (includes all items)
1	8320-1057	4	HEX HD CAPSCREW, 3/8-16x2, GR8
2	9020-8203	1	END COVER
3	9020-8204	1	PIN
4	9020-8205	3	SEAL
5	9020-8206	1	ROLLER - STATOR ASSY
6	9020-8207	1	WEAR PLATE
7	9020-8208	1	DRIVE LINK
8	9020-8209	1	SHAFT
9	9020-8210	1	THRUST BEARING
10	9020-8211	1	FRONT HOUSING
11	9020-8212	1	SHAFT SEAL KIT (includes item 4)

FILTER-OIL RESERVOIR

Starting Serial No. 8344001L
Waukesha and Perkins Engine
Revised 7-16-99

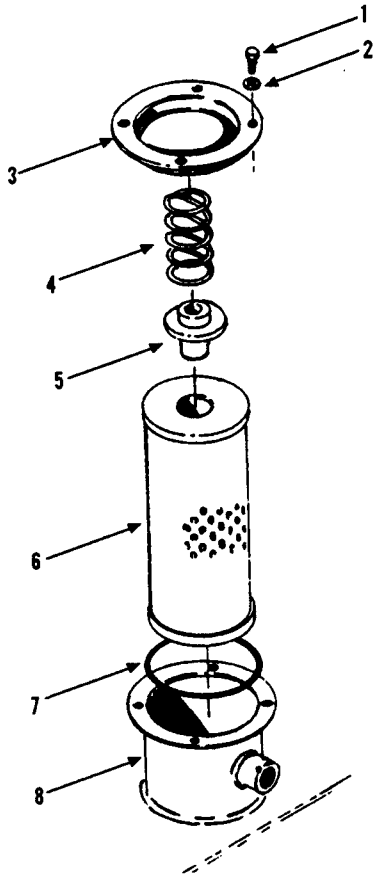

UNIT WITHOUT INDIDCATOR

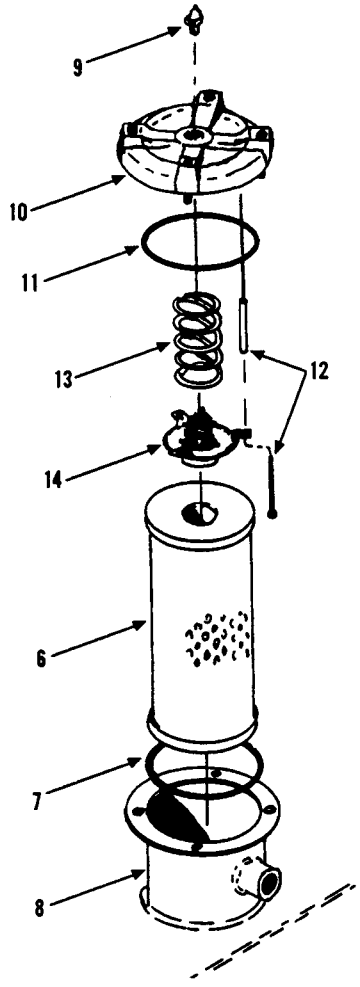

UNIT WITH POP-UP INDICATOR

Item	Part No.	Qty.	Description Of Part
1	8820-1018	4	HEX HD CAPSCREW, 5/16-18x3/4, GR5
2	8855-1010	4	LOCKWASHER, 5/16
3	9020-8200	1	CAP
4	9020-8201	1	SPRING
5	9020-8202	1	BYPASS VALVE
6	9103-3318	1	ELEMENT
7	9002-3246	1	O-RING
8	9103-5023	1	HYDRAULIC OIL TANK ASSY (before S/N 8444319)
	9103-5052	1	HYDRAULIC OIL TANK ASSY (S/N 8444319 thru 8644765)
	9103-5094	1	HYDRAULIC OIL TANK ASSY (starting S/N 8644766)
9	9103-4009	1	POP-UP INDICATOR
10	9103-4007	1	CAP ASSY (includes items 11&12)
11	9103-4329	1	O-RING
12	9103-4330	4	BOLT
13	9103-4010	1	SPRING
14	9103-4008	1	BYPASS VALVE

DIRECTIONAL CONTROL VALVE

Starting Serial No. 8444491G
Perkins Engine
Original Issue 2-85
Revised 7-16-99

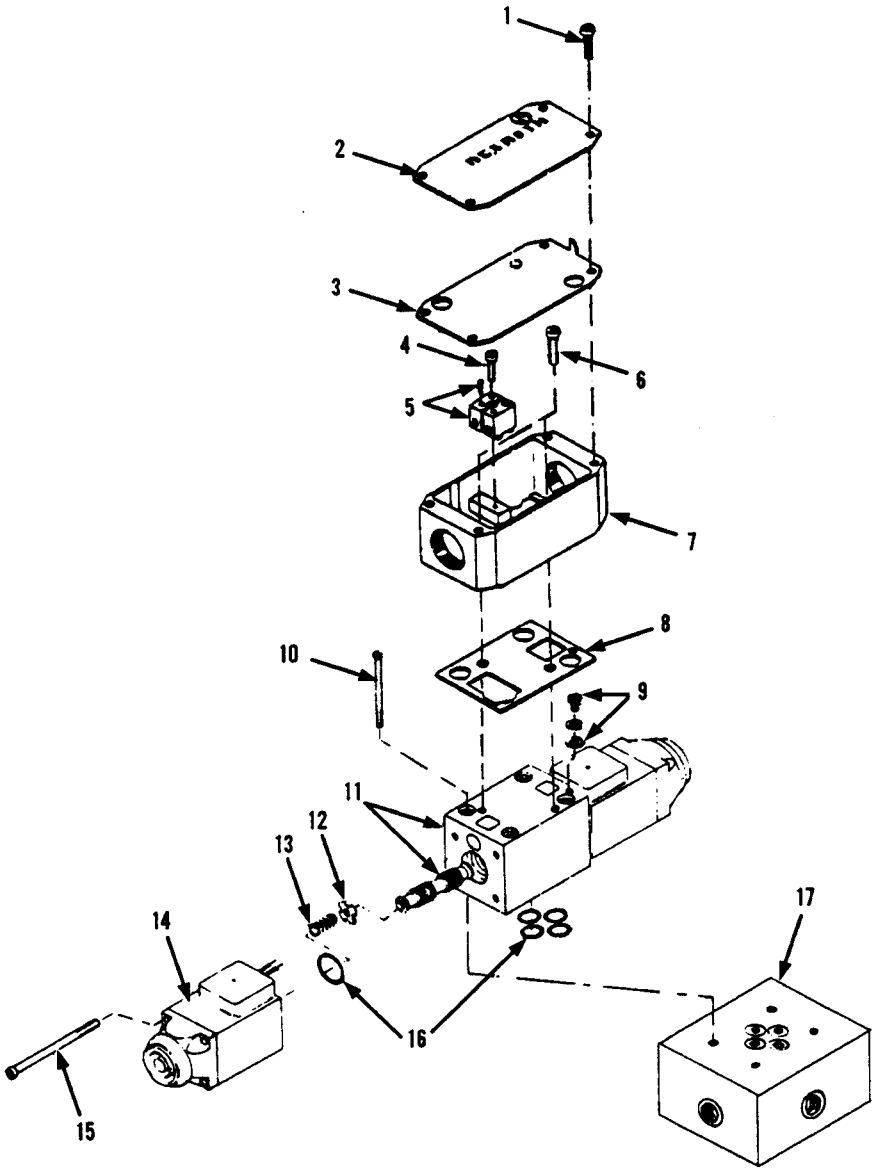

Item	Part No.	Qty.	Description Of Part
	9103-3097	1	DIRECTIONAL CONTROL VALVE (includes all items)
1		4	SCREW M4 x16 x16
2		1	NAME PLATE
3	9103-4011	1	GASKET
4		2	SCREW
5	9103-4012	2	TERMINAL BLOCK
6		2	SCREW, M4 x 15
7		1	TERMINAL BOX
8	9103-4013	1	GASKET

Item	Part No.	Qty.	Description Of Part
9		1	GROUNDING SCREW, M4 x 6
10		4	MOUNTING BOLT, 10-24x2
11	NSS	1	SPOOL & HOUSING
12	9103-4014	2	SPACER
13	9103-4015	2	SPRING
14	9103-4016	2	SOLENOID
15		8	SCREW, M4 x 65
16	9103-4017	1	O-RING KIT
17		1	MANIFOLD

HYDRAULIC COMPONENTS
(9104-3296) Accumulator Charge Valve

Starting Serial No. 8744115G
Also Machine S/N 8744079G
Original Issue 4-87
Revised 7-16-99

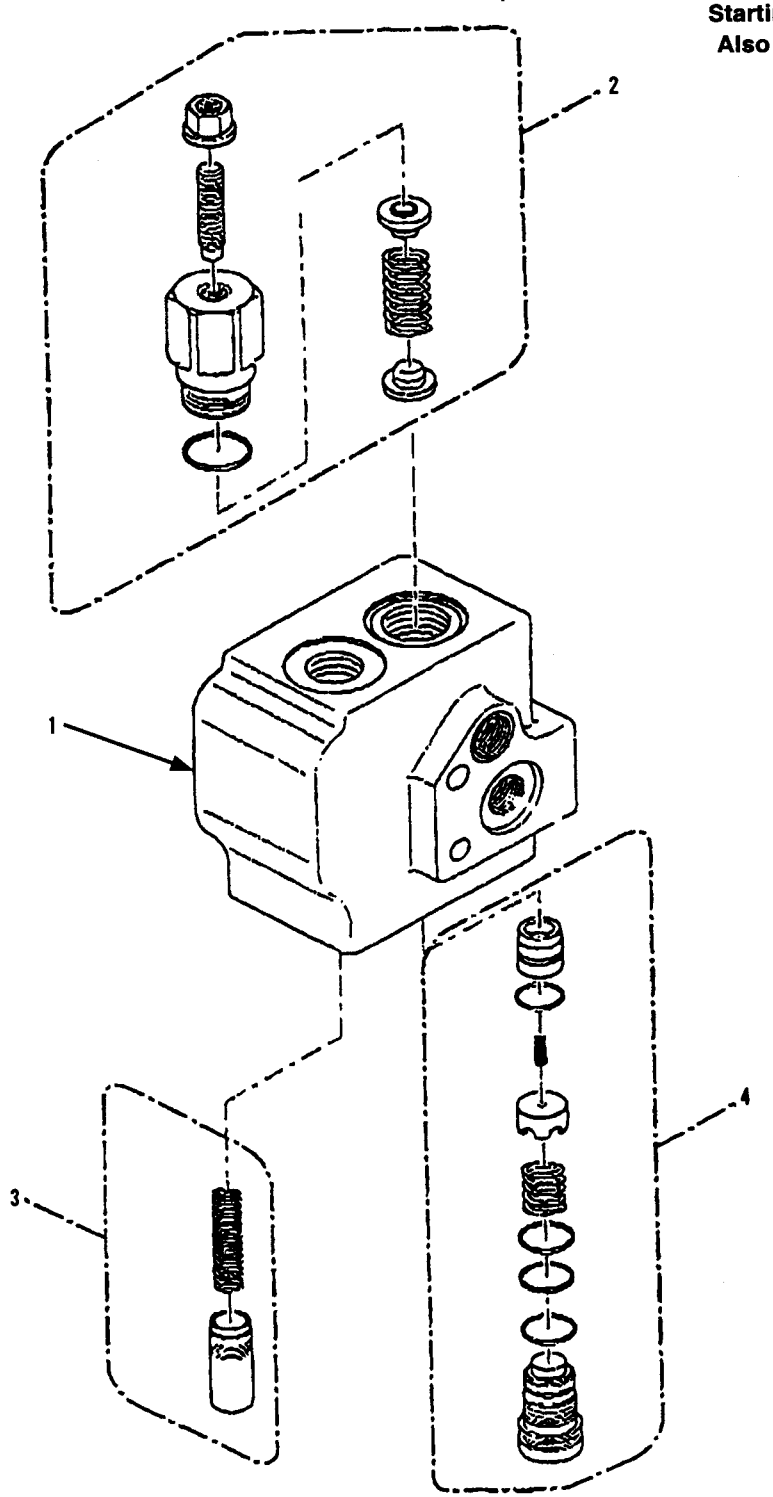

Item	Part No.	Qty.	Description Of Part
1	9104-3296	1	ACCUMULATOR CHARGE VALVE
2	9104-4538	1	LG. SPRING REPAIR KIT
3	9104-4539	1	SPOOL & SM. SPRING REPAIR KIT
4	9104-4540	1	ELEMENT & SEAL KIT
			NOTE: ONLY ITEMS WITH PART NUMBERS ARE AVAILABLE FOR SERVICE.

BRAKE VALVE

Starting Serial No. 8744115G
Also Machine S/N 8744079G
Original Issue 4-87
Revised 7-16-99

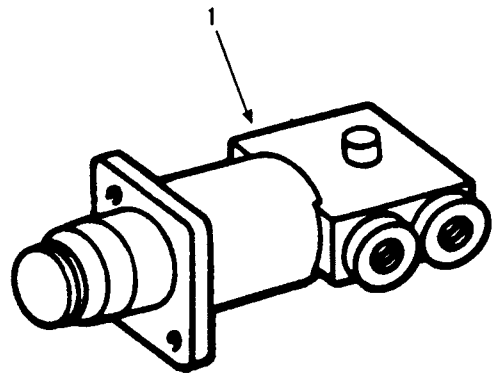

Item	Part No.	Qty.	Description Of Part
1	9103-3307	1	BRAKE VALVE ASSY (no service parts available)

PARKING BRAKE VALVE

Starting Serial No. 8744115G
Also Machine S/N 8744079G
Original Issue 4-87
Revised 7-16-99

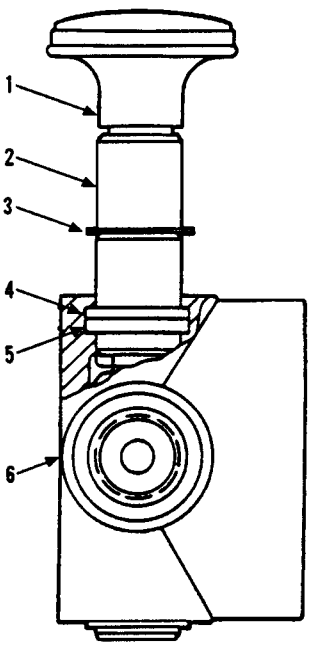

Item	Part No.	Qty.	Description Of Part
	9104-3090	1	PARKING BRAKE VALVE (includes items 1 thru 6)
1	9104-4297	1	KNOB
2	9104-4126	1	SPOOL
3	9104-4127	1	RETAINING RING
4	9104-4128	1	BACK-UP RING
5	9104-4129	1	O-RING
6	9104-4130	1	HOUSING
7	9103-3378	1	RUBBER BOOT (not shown)

OUTRIGGER VALVE ASSEMBLY

Original Issue 10-87
Revised 7-16-99

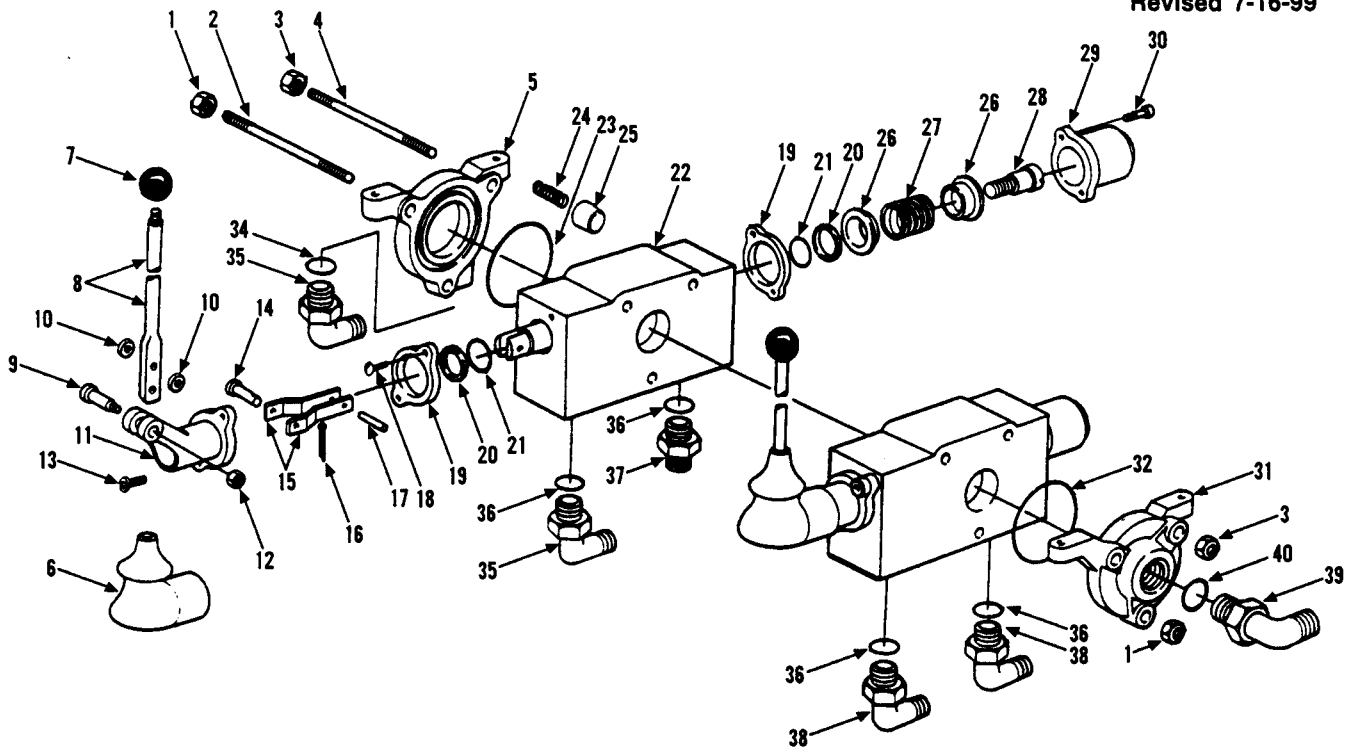

Item	Part No.	Qty.	Description Of Part
	9103-5090	1	OUTRIGGER CONTROL VALVE ASSY (includes all items)
	9103-3144	1	OUTRIGGER CONTROL VALVE ASSY (includes item 1 thru 32)
	9103-4124	1	TIE ROD KIT (includes items 1 thru 4)
	9103-4125	2	HANDLE ASSY (includes items 6 thru 17)
	9103-4126	2	SPOOL SECTION ASSY (includes items 18 thru 30)
1		2	SPECIAL NUT
2		1	TIE ROD
3		4	SPECIAL NUT
4		2	TIE ROD
5		1	OUTLET SECTION
6	9103-4127	1	BOOT
7	9103-4128	1	KNOB
8	9103-4129	1	HANDLE BRACKET
9		1	PIVOT BOLT
10		2	FLAT WASHER
11		1	HANDLE
12		1	HEX NUT
13		2	SOCKET HD CAPSCREW
14		1	PIN
15		2	LINK
16		1	RETAINER
17		1	ROLL PIN
18		2	ROUND HD MACHINE SCREW
19		2	SEAL PLATE
20	9103-4130	2	WIPER
21	9103-4131	2	O-RING
22		1	HOUSING & SPOOL ASSY (NOT SOLD SEPARATELY, ORDER P/N 9103-4126)
23	9103-4132	1	O-RING
24	9103-4133	1	SPRING
25	9103-4134	1	O-RING

Item	Part No.	Qty.	Description Of Part
26		2	SPRING SEAT
27	9103-4135	1	SPRING
28		1	SPOOL END
29		1	SPOOL CAP
30		2	SOCKET HD CAPSCREW
31		1	INLET HOUSING ASSY (includes item 32)
32	9103-4132	1	O-RING
33	8866-2060	1	ELBOW, 90 DEGREES (includes item 34)
34	8859-1206	1	O-RING
35	8866-2085	1	ELBOW, 45 DEGREES (includes item 36)
36	8859-1205	4	O-RING
37	8866-2036	1	CONNECTOR (includes item 36)
38	8866-2065	2	ELBOW, 90 DEGREES (includes item 36)
39	8866-2067	1	ELBOW, 90 DEGREES (includes item 40)
40	8859-1207	1	O-RING

NOTE: QUANTITIES ARE SHOWN FOR ONE HANDLE ASSY AND ONE SPOOL SECTION ASSY.

NOTE: WHEN REPLACING A SPOOL SECTION, REMOVE SCREWS (18) AND REPLACE WITH SCREWS 13 TO SECURE THE HANDLE BRACKET.

NOTE: ONLY PART NUMBERED PARTS ARE AVIALABLE FOR SERVICE REPLACEMENT.

DUAL P.O. CHECK VALVE

Original Issue 2-88
Revised 7-16-99

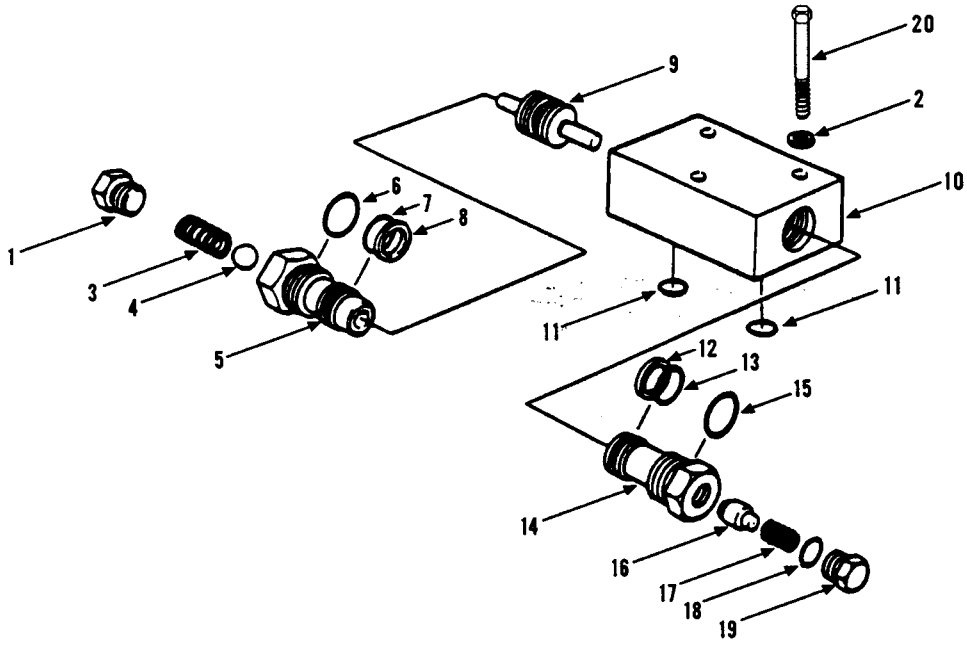

Item	Part No.	Qty.	Description Of Part
	9104-3258		DUAL P.O. CHECK VALVE ASSY (includes all items except 2, 20)
	9104-4304		CHECK CARTRIDGE ASSY (includes items 1, 3, 4, 5, 6, 7, 8,)
	9103-4107		CHECK CARTRIDGE ASSY W/ THERMAL RELIEF (includes items 12 thru 19)
1	9104-4308	1	PLUG
2	8855-1011	3	LOCK WASHER, 3/8
3	9104-4309	1	SPRING
4	9103-4111	1	BALL
5	9103-4112	1	CARTRIDGE BODY
6	9104-4305	1	O-RING
7	9104-4306	1	O-RING
8	9104-4307	1	BACK-UP RING
9	9103-4116	1	PISTON
10	9103-4117	1	BODY

Item	Part No.	Qty.	Description Of Part
11	9103-4118	2	O-RING
12	9103-4115	1	BACK-UP RING
13	9103-4114	1	O-RING
14	9103-4112	1	CARTRIDGE BODY
15	9103-4113	1	O-RING
16	9103-4119	1	THERMAL RELIEF ASSY
17	9103-4120	1	SPRING
18	9103-4109	1	O-RING
19	9103-4121	1	PLUG
20	8820-1040	3	HEX HD CAPSCREW, 3/8-16x2-1/4 GR5
21	8855-1011	3	LOCKWASHER, 3/8
			NOTE: ONLY PART NUMBERED ITEMS ARE AVAILABLE FOR SERVICE REPLACEMENT.

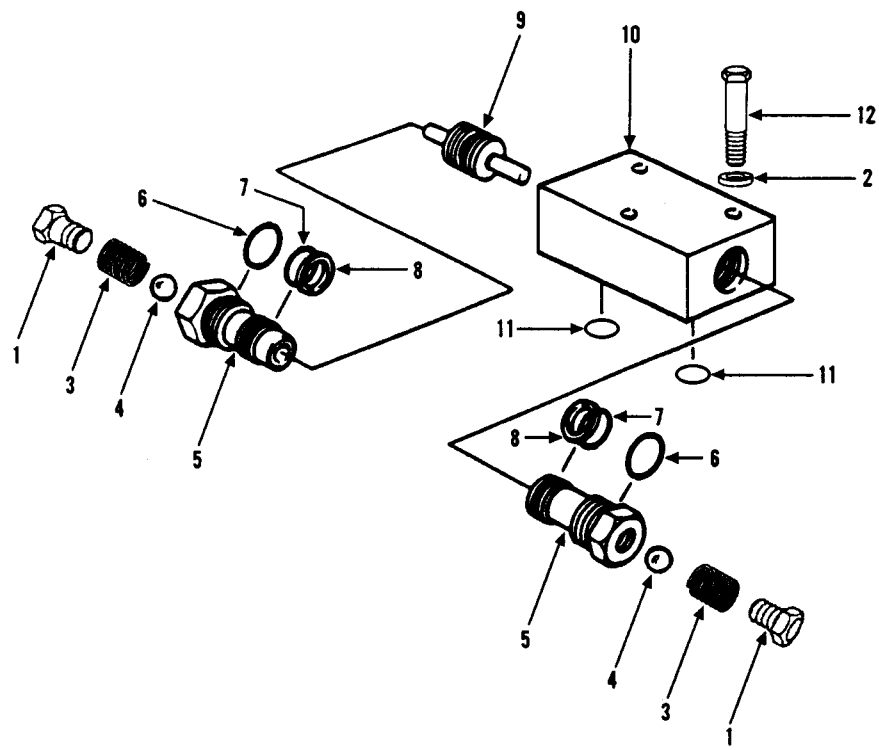

Item	Part No.	Qty.	Description Of Part
	9105-3354	2	DUAL P.O. CHECK VALVE ASSY (includes all items except items 2, 12)
1	9103-4272	1	PLUG
2	8855-1011	3	LOCKWASHER, 3/8
3	9103-4110	1	SPRING
4	9103-4111	1	BALL
5	9103-4112	1	CARTRIDGE BODY
6	9103-4113	1	O-RING
7	9103-4114	1	O-RING
8	9103-4115	1	BACK-UP RING
9	9103-4116	1	PISTON
10	9103-4117	1	BODY
11	9103-4273	2	O-RING
12	8820-1041	3	HEX HD CAPSCREW, 3/8-16x2-1/2, GR5
			NOTE: ONLY PART NUMBERED ITEMS ARE AVAILABLE FOR SERVICE REPLACEMENT.

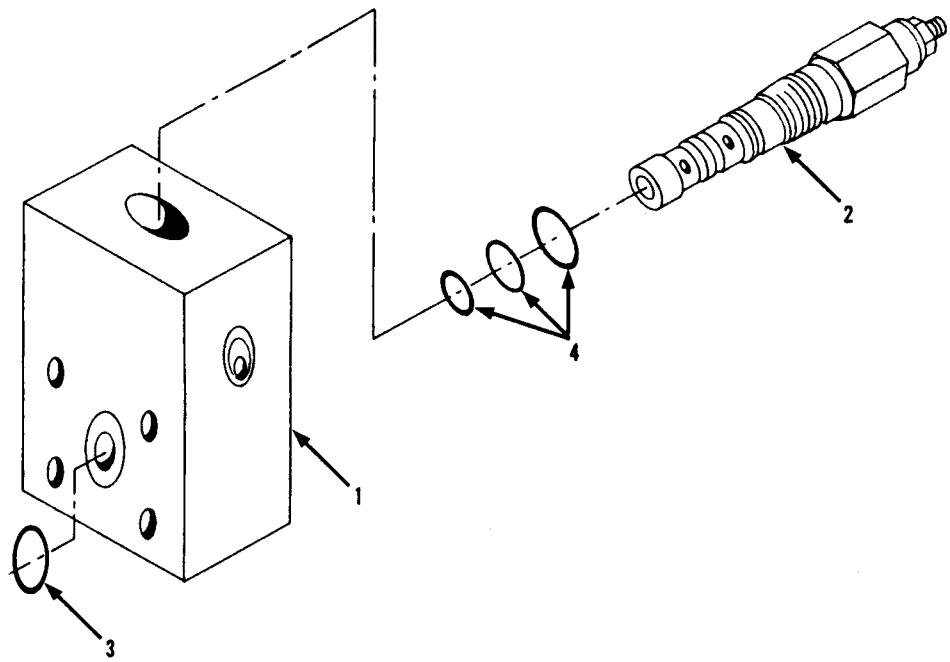

Item	Part No.	Qty.	Description Of Part
1	9104-3232	1	COUNTERBALANCE VALVE
2	9104-3245	1	LOAD CONTROL VALVE
3	8859-1102	1	O-RING
4	9103-4276	1	SEAL KIT

HYDRAULIC COMPONENTS
(9104-3065) Main Control Valve Assembly
Original Issue 11-00

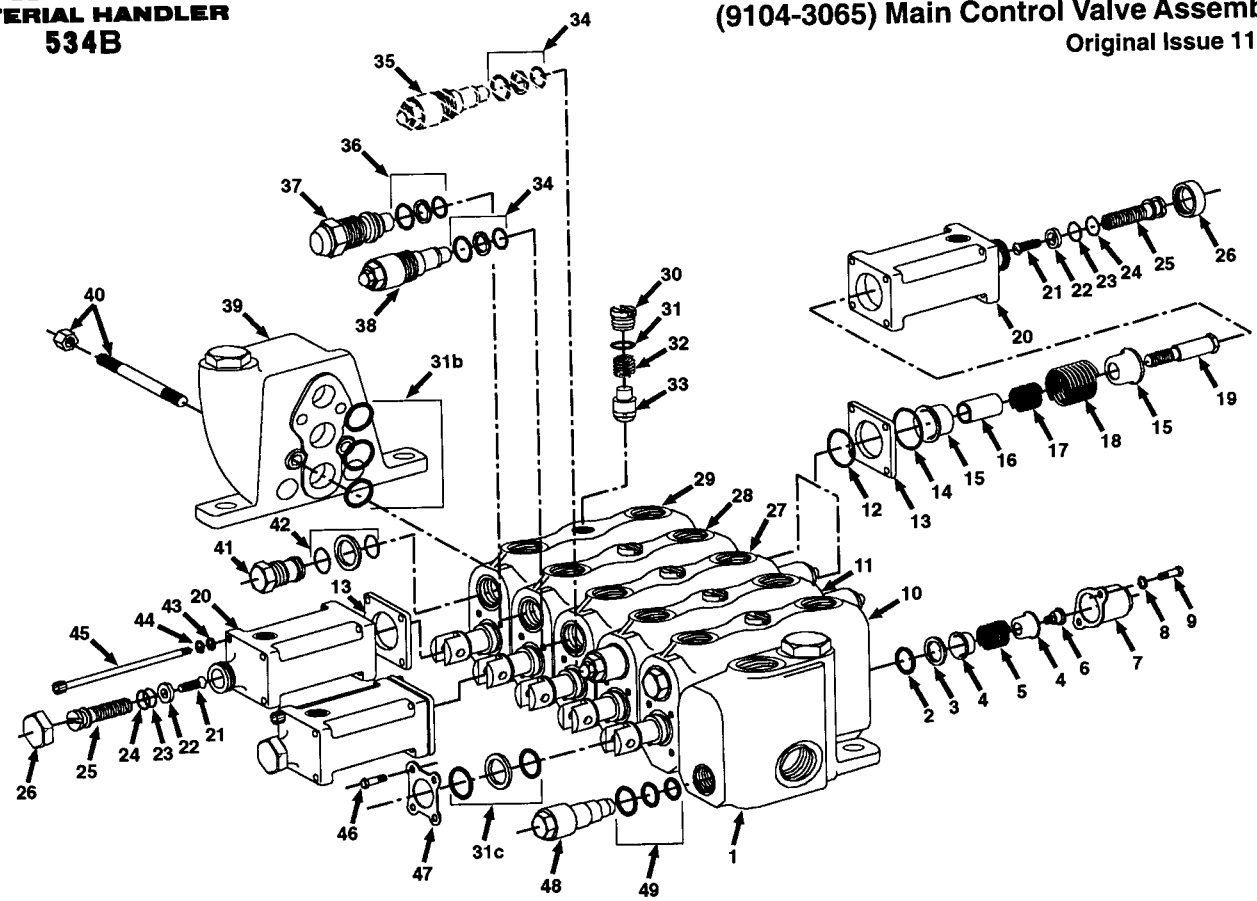

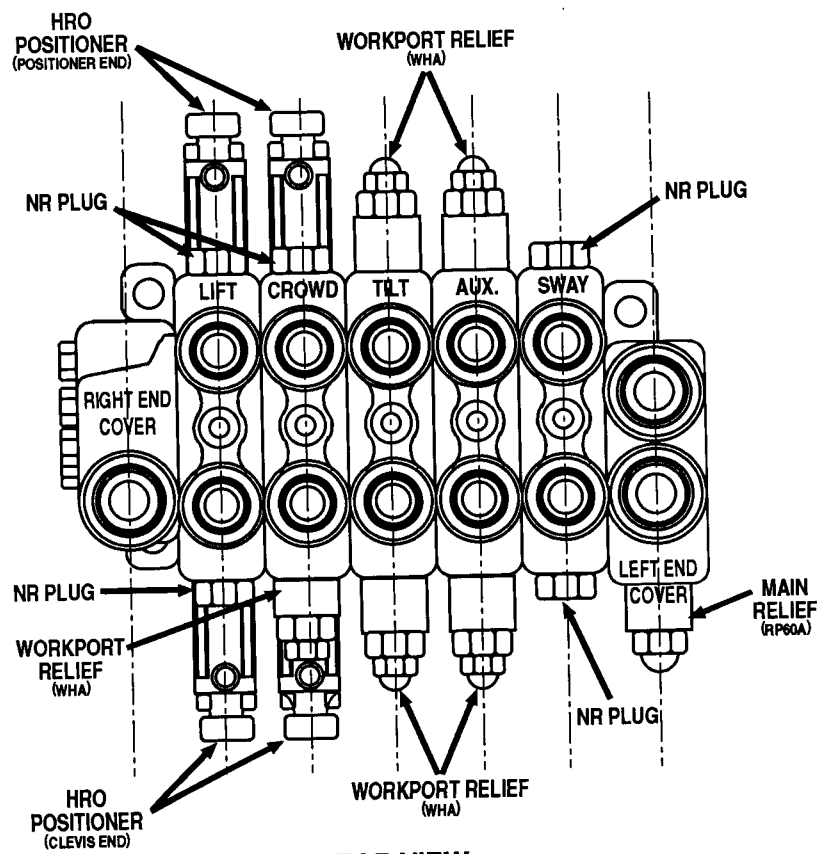

TOP VIEW

ARTWORK ON PREVIOUS PAGE

Item	Part No.	Qty.	Description Of Part
	9104-3065	1	MAIN CONTROL VALVE ASSY, (includes all items)
	9020-6417	AR	SEAL KIT, (includes items 31, 31b, & 31c)
	9104-4123	AR	SECTION SEAL KIT, (includes items 31b)
	9103-4159	AR	SPOOL SEAL KIT, (includes items 31c)
	9020-6419	AR	RETAINER PLATE ASSY, (includes items 46 & 47)
	9104-4509	AR	HRO POSITIONER SEAL KIT, (includes items 12, 14, 23, & 24)
	9104-4526	AR	NR PLUG KIT, (includes items 41 & 42)
	9104-4527	AR	NR PLUG SEAL KIT, (items 42)
	9020-6427	3	NEUTRAL POSITIONER KIT, (includes items 2 thru 9)
	9104-4510	2	HRO POSITIONER KIT, SPOOL POSITIONER END, (includes items 12 thru 26)
	9104-4534	2	HRO POSITIONER KIT, CLEVIS END, (includes items 13, 20 thru 26, 43, 44, & 45)
	9104-4530	AR	WH TYPE PORT RELIEF VALVE SEAL KIT, (includes items 36)
	9104-4533	AR	WHA PORT RELIEF VALVE SEAL KIT, (includes items 34)
	9103-4236	AR	MAIN RELIEF VALVE SEAL KIT, (includes items 49)
1	9104-4114	1	COVER PLATE ASSY, (left end), (includes item 48 & 49)
2		3	O-RING
3		3	WASHER
4		3	SPRING COLLAR
5		3	SPRING
6		3	SPOOL COLLAR
7		3	BONNET
8		6	LOCKWASHER
9		6	SCREW
10	9020-6421	1	SWAY SECTION
11	9104-4117	1	AUXILIARY SECTION
12		4	O-RING
13	9104-4516	4	SEAL PLATE
14			O-RING
15	9104-4521	2	STOP COLLAR
16	9104-4520	2	STOP SLEEVE
17	9104-4519	2	SPRING
18	9104-4518	2	SPRING
19	9104-4517	2	POSITIONER SPUD
20	9104-4515	4	BONNET
21	9104-4513	4	SCREW, COUNTER SUNK
22	9104-4514	4	TRAVEL STOP
23		4	O-RING
24		4	BACK-UP RING
25	9104-4512	2	SCREW
26	9104-4511	4	BOOT
27	9104-4119	1	TILT SECTION
28	9104-4121	1	CROWD SECTION
29	9104-4122	1	LIFT SECTION
30	9104-4535	5	LOAD CHECK PLUG
31		5	O-RING
32		5	SPRING
33			5 POPPET
34		AR	WHA RELIEF SEALS
35	9104-4531	2	WHA RELIEF, (1500 p.s.i.)
36		AR	WH RELIEF SEALS
37	9104-4529	1	WH RELIEF, (2650 p.s.i.)
38	9104-4532	2	WHA RELIEF, (3250 p.s.i.)
39	9104-4124	1	COVER PLATE ASSY, (right end)
40	9104-4125	1	STUD ASSY, (includes four studs & four nuts), (lubricate and torque to 23-27 ft. lbs.)
41	9104-4526	5	NR PLUG
42		AR	NR PLUG SEALS
43	9108-4232	16	BEARING PLATE
44	9108-4231	16	LOCKWASHER
45	9104-4522	16	HEX HD CAPSCREW, 1/4-20X3-1/2
46		12	CAPSCREW
47		3	RETAINER PLATE
48	900-8136	1	MAIN RELIEF VALVE ASSY
49	9103-4236	1	MAIN RELIEF SEALS

NOTE: ONLY ITEMS WITH PART NUMBERS ARE AVAILABLE FOR SERVICE.

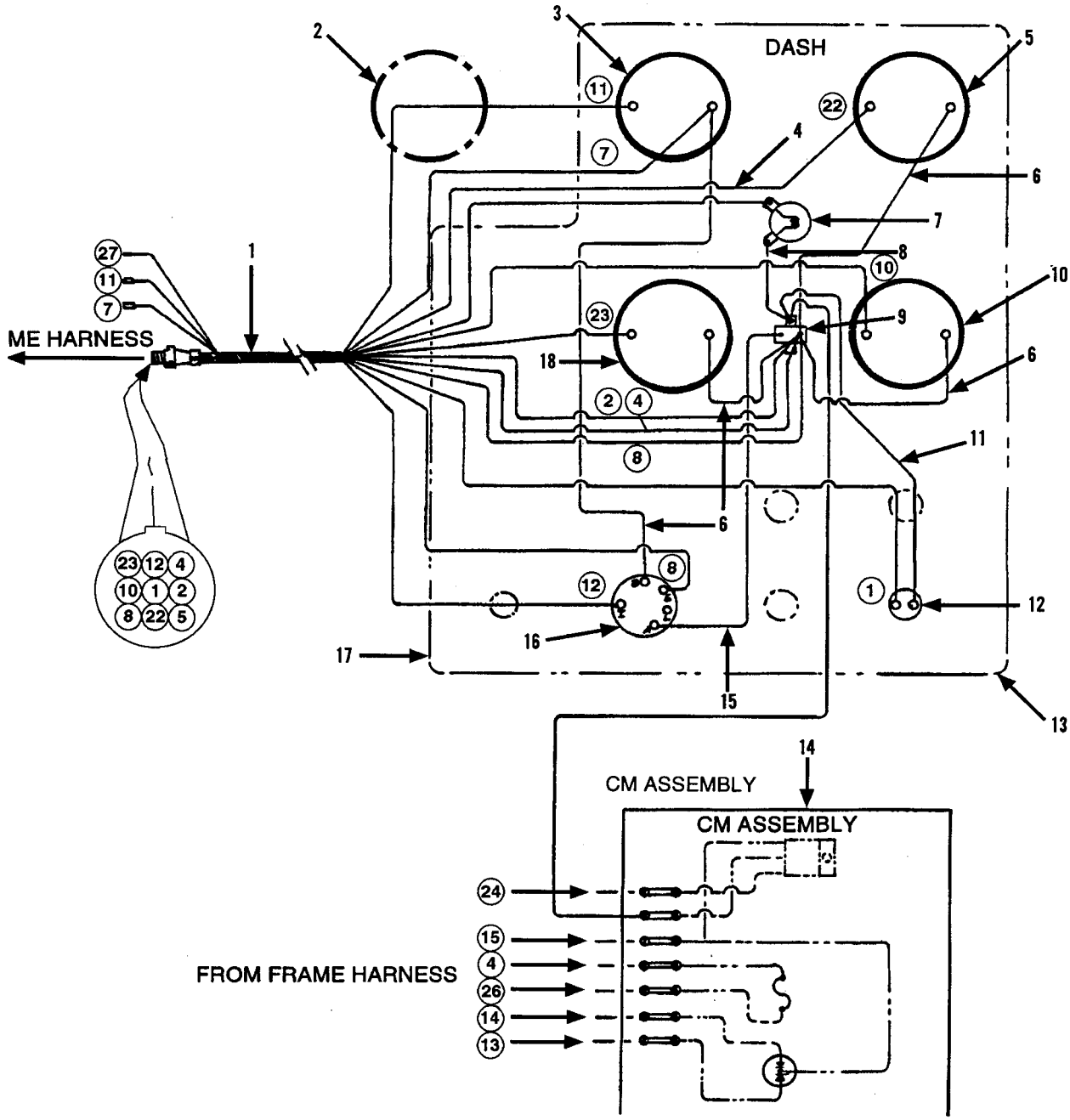

Item	Part No.	Qty.	Description Of Part
1	9060-2893	1	DASH HARNESS
2	9020-3923	1	TRAMSMISSION TEMPERATURE GAUGE
3	9020-5685	1	AMP. GAUGE
4	9020-7857	1	JUMPER WIRE
5	9020-5686	1	FUEL GAUGE
6	9020-0351	2	JUMPER WIRE
7	9020-0192	1	BRAKE WARNING LIGHT
8	9020-0349	1	JUMPER WIRE
9	9020-0506	1	CIRCUIT BREAKER
10	9020-5690	1	OIL PRESSURE GAUGE

Item	Part No.	Qty.	Description Of Part
11	9020-0353	1	JUMPER WIRE
12	9020-0434	1	HORN BUTTON
13	9020-7866	1	GROUND WIRE
14	9040-3420	1	CM ASSEMBLY
15	9020-5661	1	JUMPER WIRE
16	9020-0170	1	IGNITION SWITCH
17	9040-3178	1	INSTRUMENT PANEL
	9040-3130	1	INSTRUMENT PANEL DECAL
18	9020-5687	1	TEMPERATURE GAUGE

WIRING - DASH

Starting Serial No. 8444490
Perkins Engine Only
Original Issue 2-85
Revised 5-11-00

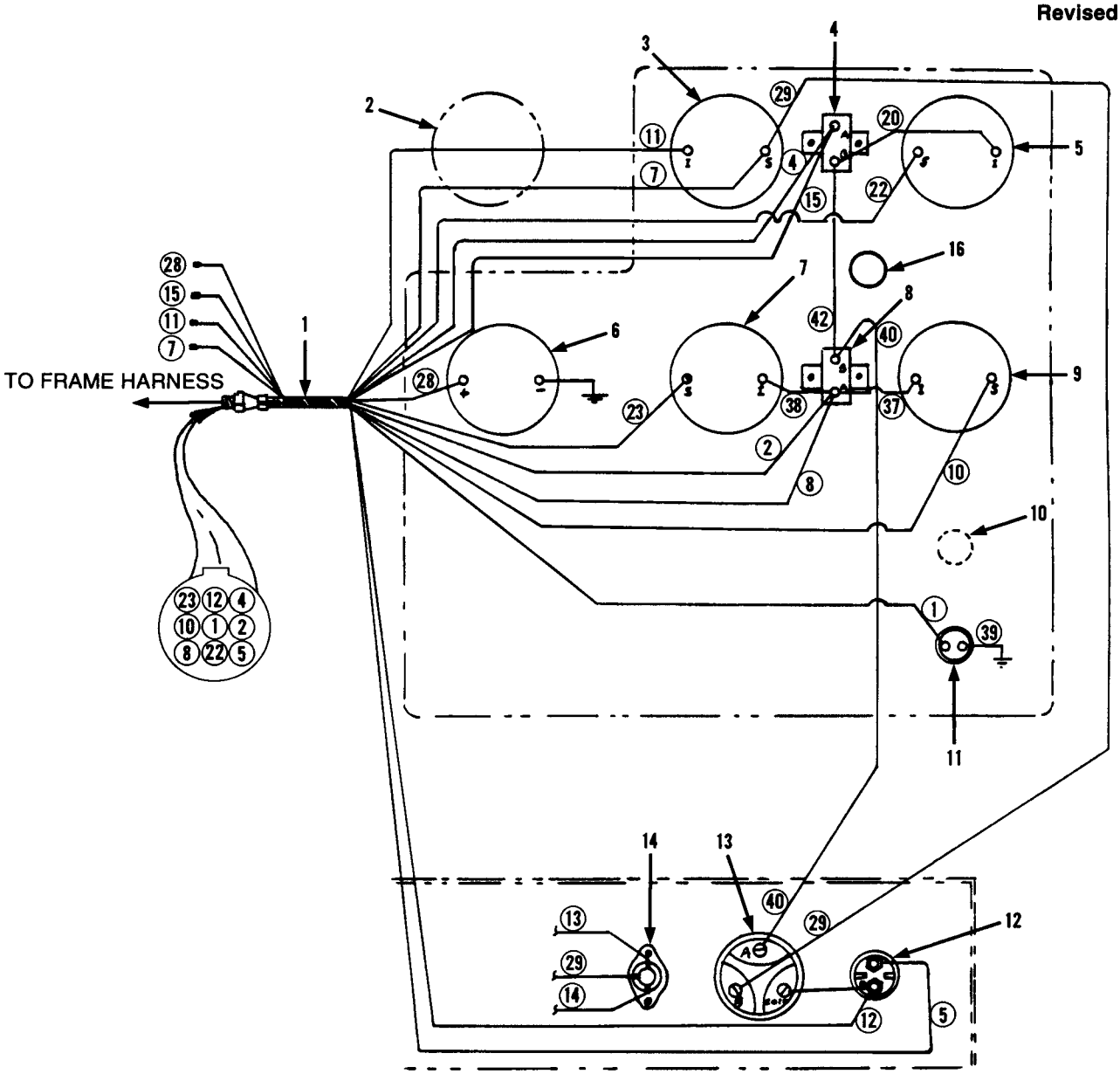

Item	Part No.	Qty.	Description Of Part
1	9103-3112	1	DASH HARNESS
2	9103-3282	1	TRANSMISSION TEMPERATURE GAUGE
3	9020-5685	1	AMP GAUGE
4	9103-3111	1	CIRCUIT BREAKER
5	9020-5686	1	FUEL GAUGE
6	9020-5688	1	HOUR GAUGE
7	9020-5687	1	WATER TEMPERATURE GAUGE
8	9020-0506	1	CIRCUIT BREAKER

Item	Part No.	Qty.	Description Of Part
9	9020-5690	1	OIL PRESSURE GAUGE (80 P.S.I.)
	9103-3247	1	OIL PRESSURE GAUGE (100 P.S.I.)
10	8666-1083	1	PLUG
11	9020-0434	1	HORN BUTTON
12	9020-5927	1	STARTER BUTTON
13	9103-3110	1	IGNITION SWITCH
14	9020-7646	1	BLACK BOX (diode)
15	9103-1102	1	INSTRUMENT PANEL
*16	9103-3084	1	BRAKE WARNING LIGHT

** Changed part number on item 16.*

DASH WIRING

Starting Serial No. 8444490
Perkins Engine Only
Original Issue 2-85
Revised 3-88

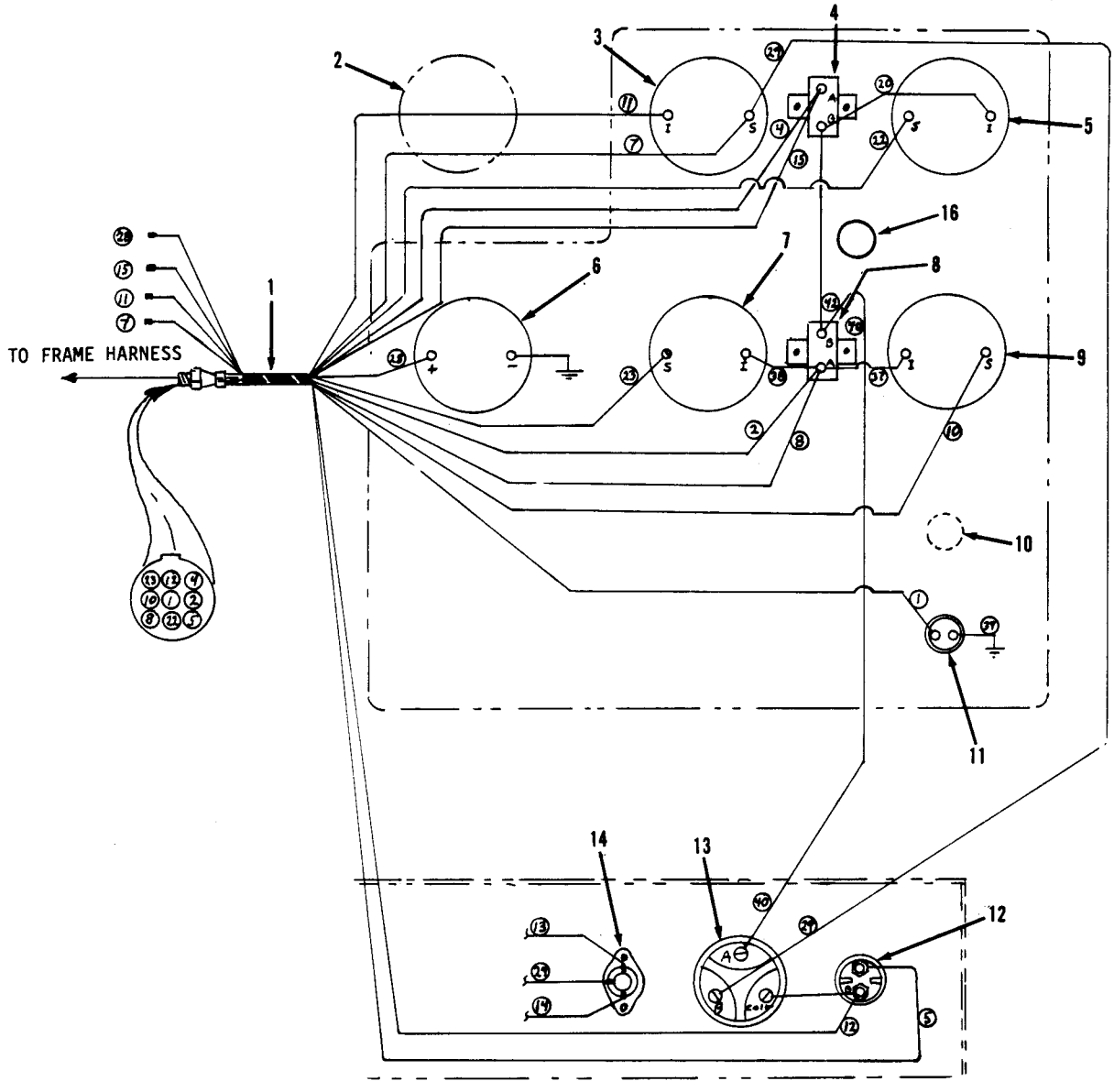

Item	Part No.	Qty.	Description Of Part
1	9103-3112	1	DASH HARNESS
2	9103-3282	1	TRANSMISSION TEMPERATURE GAUGE
3	9020-5685	1	AMP GAUGE
4	9103-3111	1	CIRCUIT BREAKER
5	9020-5686	1	FUEL GAUGE
6	9020-5688	1	HOUR GAUGE
7	9020-5687	1	WATER TEMPERATURE GAUGE
8	9020-0506	1	CIRCUIT BREAKER

Item	Part No.	Qty.	Description Of Part
9	9020-5690	1	OIL PRESSURE GAUGE (80 P.S.I.)
	9103-3247	1	OIL PRESSURE GAUGE (100 P.S.I.)
10	8666-1083	1	PLUG
11	9020-0434	1	HORN BUTTON
12	9020-5927	1	STARTER BUTTON
13	9103-3110	1	IGNITION SWITCH
14	9020-7646	1	BLACK BOX (diode)
15	9103-1102	1	INSTRUMENT PANEL
16	9103-3184	1	BRAKE WARNING LIGHT

WIRING - FRAME and WAUKESHA DIESEL ENGINE

Starting Serial No. 8344001L
Thru Serial No. 8444490G
Waukesha Engine Only
Revised 11-27-00

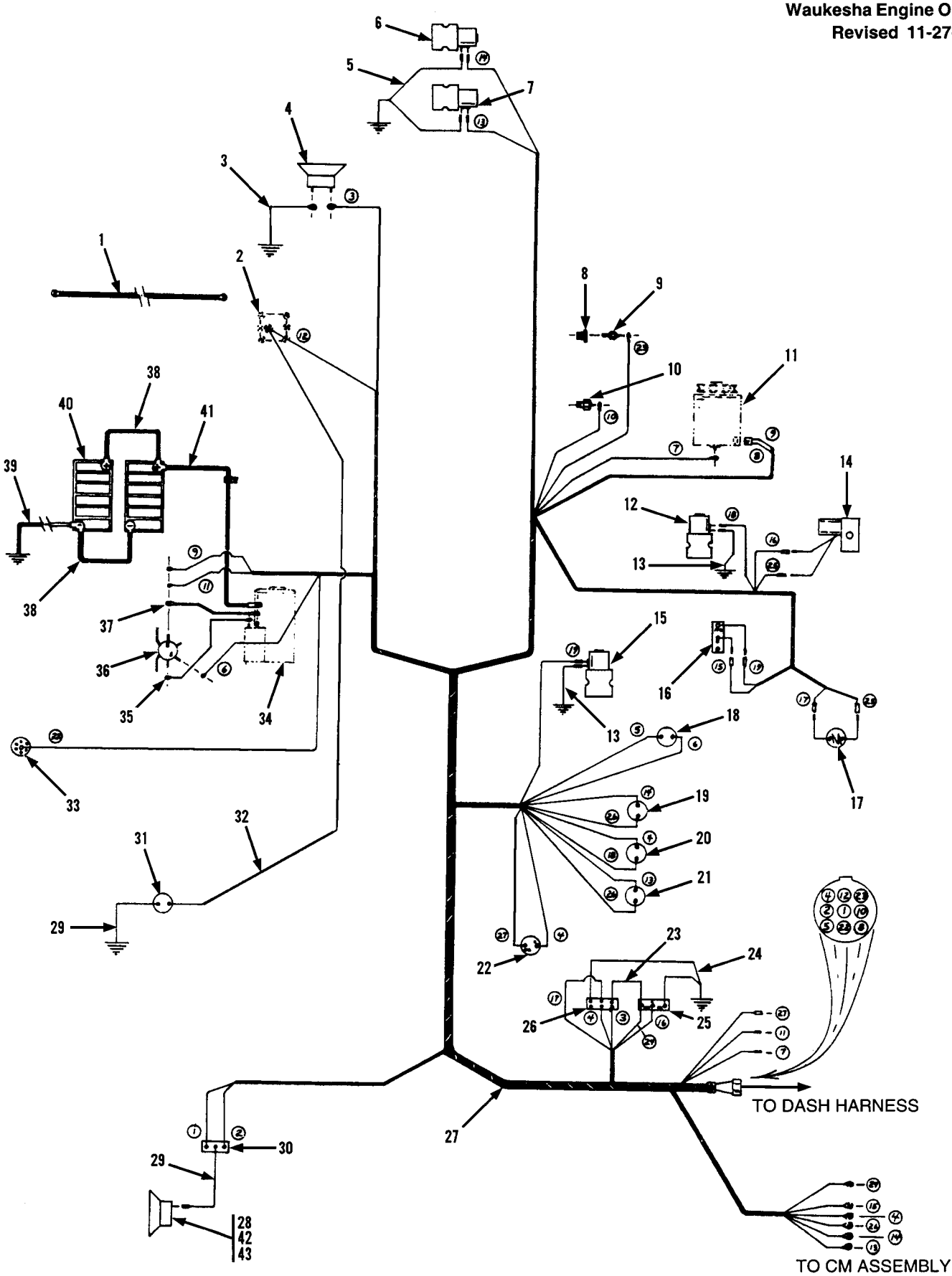

** Revised part number on item 17; added items 42 and 43.*

Item	Part No.	Qty.	Description Of Part
1	9020-0811	1	GROUND CABLE
2			FUEL SHUT OFF SWITCH, (comes with engine)
3	9020-6325	1	JUMPER WIRE
4	7722-3003	1	BACK-UP ALARM
5	9020-7717	1	JUMPER WIRE
6	9020-6739	1	SERIES SOLENOID VALVE
7	9020-6739	1	PARALLEL SOLENOID VALVE
8	8871-1381	1	
9	9020-6124	1	WATER TEMPERATURE SENDER
10	9103-3139	1	OIL PRESSURE SENDER
11			ALTERNATOR, (comes with engine)
12	9020-6739	1	CAVITATION SOLENOID VALVE
13	9020-7719	1	JUMPER WIRE
14	9020-7755	1	PILOT PRESSURE FORWARD REVERSE CONTROL
15	9020-6739	1	LOW TORQUE INCHING SOLENOID VALVE
16	9020-0616	1	LOW TORQUE INCHING SWITCH
*17	9020-7752	1	FORWARD REVERSE INCHING POT.
18	9020-4973	1	NUETRAL START SWITCH, (requires 2-8998-1036 pan head screws for connecting wires)
19	9103-3235	1	SECOND GEAR SWITCH
20	9103-3235	1	THIRD GEAR SWITCH
21	9103-3235	1	FIRST GEAR SWITCH
22	9020-7823	1	BRAKE PRESSURE SWITCH
23	9020-7524	1	JUMPER WIRE
24	9020-7773	1	JUMPER WIRE
25	9020-0616	1	FORWARD SWITCH
26	9020-7482	1	REVERSE SWITCH
27	9080-1336	1	ENGINE FRAME HARNESS
28	2492-1393	1	HORN
29	9020-2886	2	JUMPER WIRE
30	8866-1084	1	HORN RELAY
31	9020-5688	1	HOUR METER
32	9020-6079	1	JUMPER WIRE
33	9040-0654	1	FUEL GAUGE SENDER
34	9103-4057	1	STARTER
35	9020-5205	1	JUMPER WIRE
36	9040-2427	1	STARTER SOLENOID
37	9020-7497	1	JUMPER CABLE
38	8584-1094	2	CLAMP
39	9103-3042	1	CABLE
40			BATTERY, (purchase locally)
41	9103-3041	1	CABLE
*42	2492-1394	1	BRACKET
*43	2492-1395	1	NUT

** Revised part number on item 17; added items 42 and 43.*

WIRING - FRAME and PERKINS DIESEL ENGINE

Starting Serial No. 8444491
Perkins Engine Only
Original Issue 2-85
Revised 8-6-99

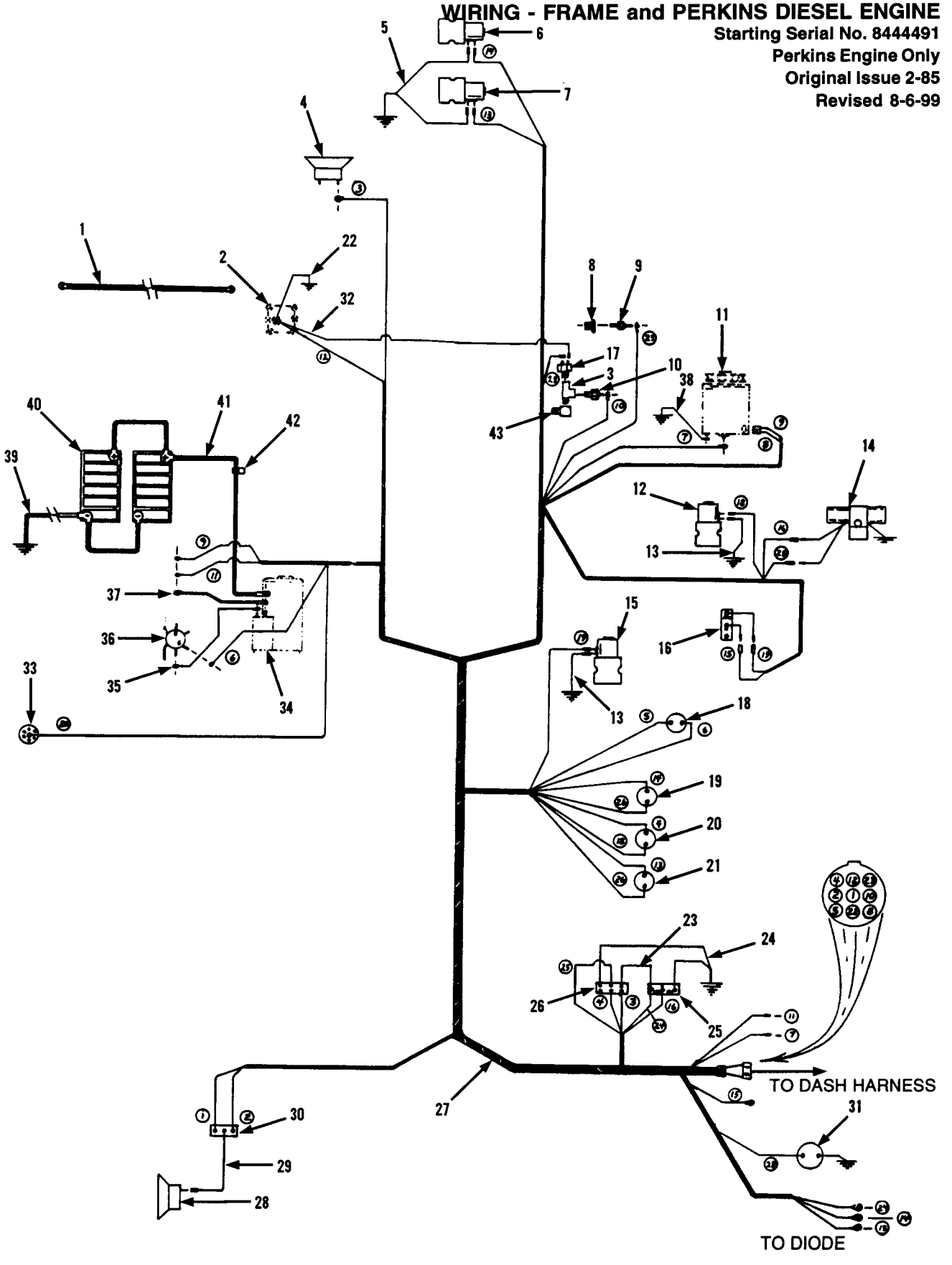

WIRING - FRAME and PERKINS DIESEL ENGINE

Starting Serial No. 8444491
Perkins Engine Only
Original Issue 2-85
Revised 8-6-99

Item	Part No.	Qty.	Description Of Part
1	9020-0811	1	GROUND CABLE
2			FUEL SHUT OFF SWITCH (comes with engine)
3	8871-2231	1	STREET TEE - 1/8
4	7722-3003	1	BACK-UP ALARM
5	9020-7717	1	JUMPER WIRE
6	9020-6739	1	SERIES SOLENOID VALVE
7	9020-6739	1	PARALLEL SOLENOID VALVE
8	8871-1383	1	REDUCING BUSHING 1/2X3/8
9	9020-6124	1	WATER TEMPERATURE SENDER
10	9103-3139	1	OIL PRESSURE SENDER
11	9103-3234	1	ALTERNATOR
12	9020-6739	1	CAVITATION SOLENOID VALVE
13	9020-7719	1	JUMPER WIRE
14	9103-3097	1	PILOT PRESSURE FOWARD REVERSE CONTROL VALVE
15	9020-6739	1	LOW TORQUE INCHING SOLENOID VALVE
16	9103-3098	1	TRANSMISSION DISCONNECT SWITCH (starting S/N 8544670)
	9103-3202	1	TRANSMISSION DISCONNECT SWITCH (starting S/N 8544671)
17	2474-1047	1	HOUR METER SWITCH
18	9020-4973	1	NEUTRAL START SWITCH
	8998-1036	2	PAN HEAD SCREW
19	9103-3235	1	SECOND GEAR SWITCH
20	9103-3235	1	THIRD GEAR SWITCH
21	9103-3235	1	FIRST GEAR SWITCH
	9020-7225	3	SWITCH BOOT (not shown-used on 9020-6757 switches)
22	9103-1197	1	JUMPER WIRE
23	9020-7524	1	JUMPER WIRE
24	9020-7773	1	JUMPER WIRE
25	9020-0616	1	FORWARD SWITCH (S/N 8444491 thru 8544670)
	9103-3202	1	FORWARD SWITCH (starting S/N 8544671)
26	9020-7482	1	REVERSE SWITCH (S/N 8444491 thru 8544670)
	9103-3202	1	REVERSE SWITCH (starting S/N 8544671)
27	9103-3079	1	ENGINE FRAME HARNESS
28	2492-1393	1	HORN
	2492-1394	1	BRACKET
	2492-1395	1	NUT
29	9020-2886	1	JUMPER WIRE
30	8666-1084	1	HORN RELAY
31	9020-5688	1	HOUR METER
32	9103-1198	1	JUMPER WIRE
	8666-1143	1	TERMINAL ADAPTER
33	9040-0654	1	FUEL GAUGE SENDER
34	9103-3262	1	STARTER
35	9020-5205	1	JUMPER WIRE
36	9040-2427	1	STARTER SOLENOID
37	9020-7497	1	JUMPER CABLE
38	9020-7630	1	JUMPER CABLE
39	9103-3042	1	GROUND CABLE
40		2	BATTERY (purchase locally)
41	9103-3086	1	POSITIVE CABLE
42	8584-1094	1	CLAMP
	7710-3006	2	NUT
43	8869-1345	1	ELBOW - 90 DEGREES
			NOTE: TO UPDATE MACHINES WITH OLD STYLE SWITCHES TO NEW STYLE SWITCHES. ORDER 9103-5110 MICROSWITCHES KIT.

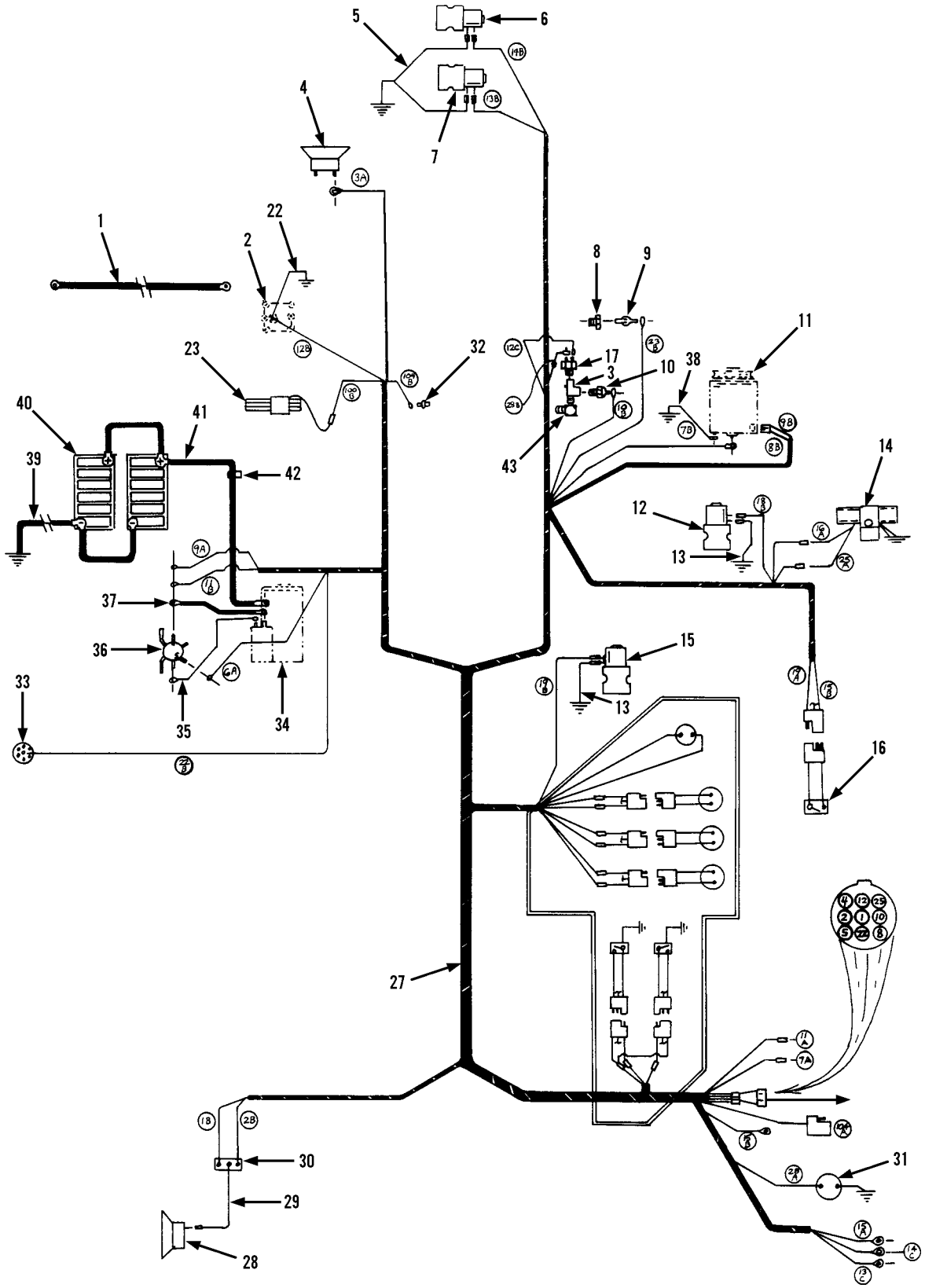

** Added part number & changed description on item 40.*

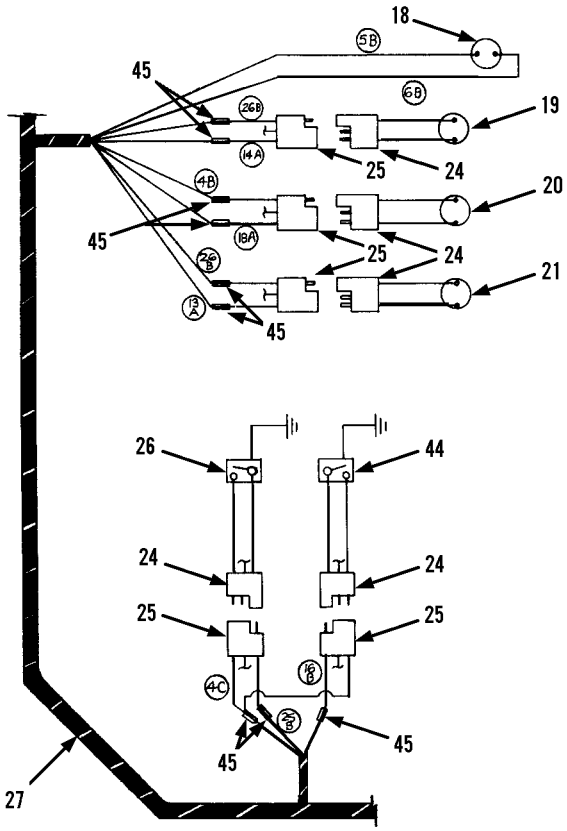

VIEW A

Item	Part No.	Qty.	Description Of Part
1	9020-0811	1	GROUND CABLE
2			FUEL SHUT OFF SWITCH, (comes with engine)
3	8871-2231	1	STREET TEE, 1/8
4	7722-3003	1	BACK-UP ALARM
5	9020-7717	1	JUMPER WIRE
6	9020-6739	1	SERIES SOLENOID VALVE
7	9020-6739	1	PARALLEL SOLENOID VALVE
8	8871-1383	1	REDUCING BUSHING, 1/2X3/8
9	9020-6124	1	WATER TEMPERATURE SENDER
10	9103-3139	1	OIL PRESSURE SENDER
11	9103-3234	1	ALTERNATOR
12	9020-6739	1	CAVITATION SOLENOID VALVE
13	9020-7719	2	JUMPER WIRE
14	9103-3097	1	PILOT PRESSURE FORWARD REVERSE CONTROL VALVE
15	9020-6739	1	LOW TORQUE INCHING SOLENOID VALVE
16	9103-3202	1	TRANSMISSION DISCONNECT SWITCH
17	2474-1047	1	HOURMETER SWITCH
18	9020-4973	1	NEUTRAL START SWITCH
	8998-1036	2	PAN HD SCREW
19	9103-5112	1	SECOND GEAR SWITCH
20	9103-5112	1	THIRD GEAR SWITCH
21	9103-5112	1	FIRST GEAR SWITCH
22	9103-1197	1	JUMPER WIRE
23	9103-3270	1	PRIMER PUMP

Item	Part No.	Qty.	Description Of Part
24	8348-3114	6	3 WAY CONNECTOR, (male)
25	8348-3113	6	3 WAY CONNECTOR, (female)
26	9103-3202	1	FORWARD SWITCH
27	9103-3079	1	ENGINE FRAME HARNESS
28	2492-1393	1	HORN
	2492-1394	1	BRACKET
	2492-1395	1	NUT
29	9020-2886	1	JUMPER WIRE
30	8666-1084	1	HORN RELAY
31	9020-5688	1	HOUR METER
32	9103-3283	1	OIL TEMERATURE SENDER
33	9040-0654	1	FUEL LEVEL SENDER
34	9103-3323	1	STARTER
35	9020-5205	1	JUMPER WIRE
36	9040-2427	1	STARTER SOLENOID
37	9020-7497	1	JUMPER CABLE
38	9020-7630	1	JUMPER WIRE
39	9103-3042	1	GROUND CABLE
*40	9020-3359	2	BATTERY, (12 volt, 590 amps), TOP STUD, BCI GROUP 27
41	9103-3086	1	POSITIVE CABLE
42	8584-1094	1	CLAMP
	7710-3006	2	NUT
43	8869-1345	1	ELBOW, 90 DEGREES
44	9103-3202	1	REVERSE SWITCH
45	8668-3480	9	CRIMP ON CONNECTOR

** Added part number & changed description on item 40.*

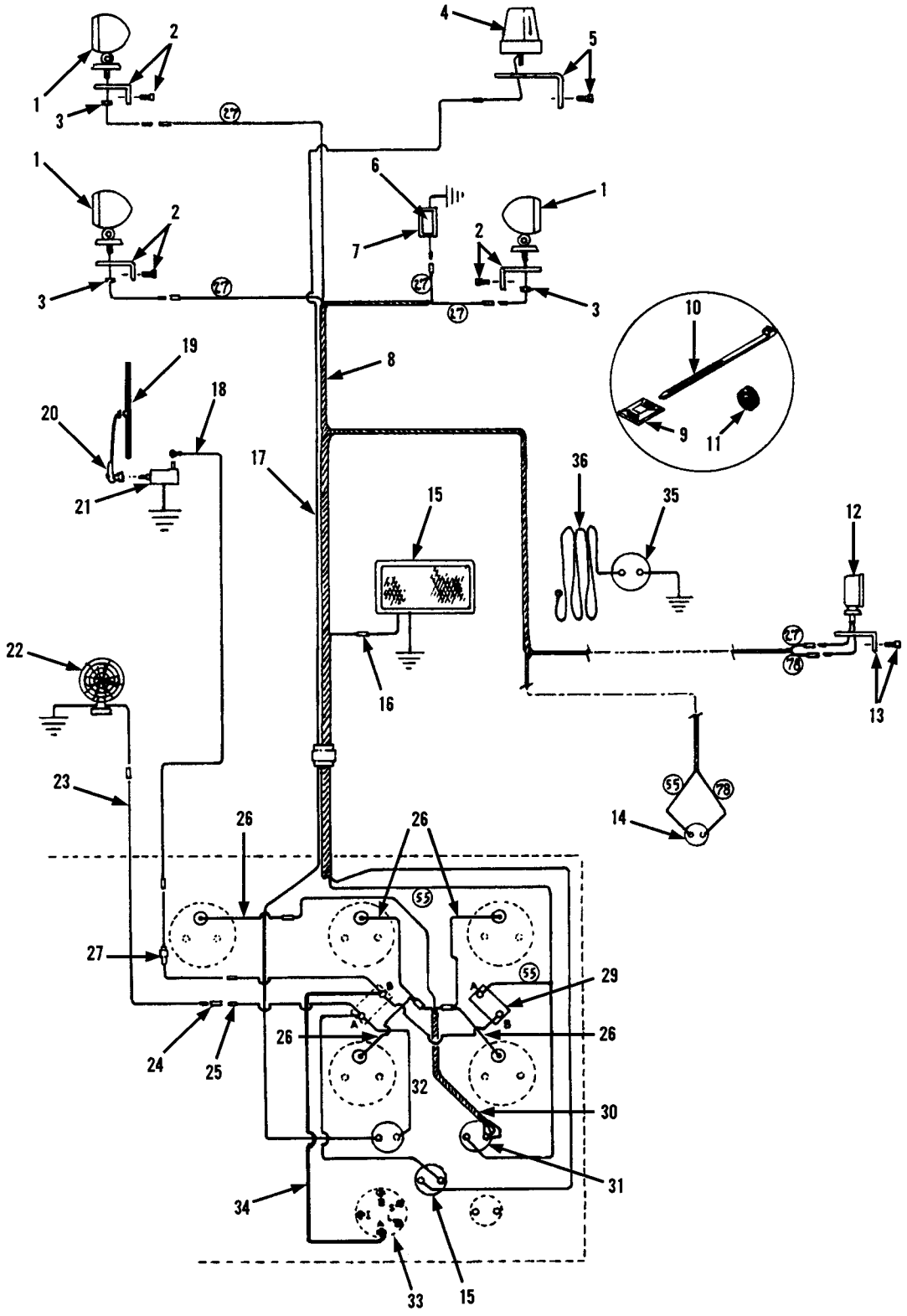
1
2
3
4
5
6
7
8
9
10
11
12
13
14
15
16
17
18
19
20
21
22
23
24
25
26
27
29
30
31
32
33
34
35
36
55
78

Item	Part No.	Qty.	Description Of Part
1	9020-0586	3	WORK LIGHT
	8820-1032	AR	HEX HD CAPSCREW, 3/8-16X5/8, GR5
2	9020-6129	3	LIGHT MOUNTING BRACKET
	9002-7316	6	SELF TAPPING SCREW
3	8850-1006	AR	HEX NUT, 3/8-16
4	9020-0685	1	ROTATING BEACON
	8820-1014	2	HEX HD CAPSCREW, 1/4-20X3-1/4, GR5
	8850-1004	2	HEX NUT, 1/4-20
5	9040-0706	1	BEACON MOUNTING BRACKET
	9002-7316	3	SELF TAPPING SCREW
6	9020-4009	1	DOME LIGHT
7	9040-0670	1	DOME LIGHT BRACKET
	8832-1022	2	SELF TAPPING SCREW, 8-32X3/8
8	9060-2748	1	CAB WIRING HARNESS
9	9020-6310	7	STRAP ANCHOR
10	9002-7187	7	TIE STRAP
11	9002-7214	AR	RUBBER GROMMET (use at cab roof and cab front)
	9020-2303	AR	RUBBER GROMMET (use at cab rear and seat deck)
12	9020-5912	1	TAIL AND STOP LIGHT
13	9020-6130	1	TAIL LIGHT MOUNTING BRACKET
	8820-1032	2	HEX HD CAPSCREW, 3/8-16X5/8, GR5
14	9020-0615	1	BRAKE LIGHT SWITCH
15	9020-0679	1	HEATER (includes switch)
16	9020-6134	1	CONNECTOR
17	9020-6133	2	WIRE (heater and beacon)
18	9020-0914	1	WIRE (windshield wiper)
19	9020-6024	1	WIPER BLADE
20	9020-0952	1	WIPER ARM
21	9020-6023	1	WIPER MOTOR
22	9020-0680	1	DEFROSTER FAN
23	9020-6358	1	FAN WIRE
24	9002-6830	AR	WIRE CONNECTOR
25	9020-3628	1	FAN WIRE
26	9020-0347	5	GAUGE LIGHT WIRING KIT (consists of snap-in light and wire)
27	9020-3376	1	WIPER WIRE FUSE
28	9020-0349	1	WIRE (fuse to circuit breaker)
29	9020-6131	1	CIRCUIT BREAKER
	8850-1613	4	HEX NUT, #10-32
30	9040-3076	1	DASH LIGHT WIRING HARNESS
31	9020-0171	2	LIGHTS AND BEACON LIGHT SWITCH
32	9020-0352	1	WIRE (circuit breaker to heater switch, breaker to beacon switch, and breaker to breaker)
33	9020-0170	1	IGNITION SWITCH
	9103-3110	1	IGNITION SWITCH (starting serial no. 8444491)
34	9020-5661	1	WIRE (ignition accessory terminal to circuit breaker)
35	9020-5688	1	HOUR METER
36	9020-6079	1	WIRE (hour meter to fuel switch)

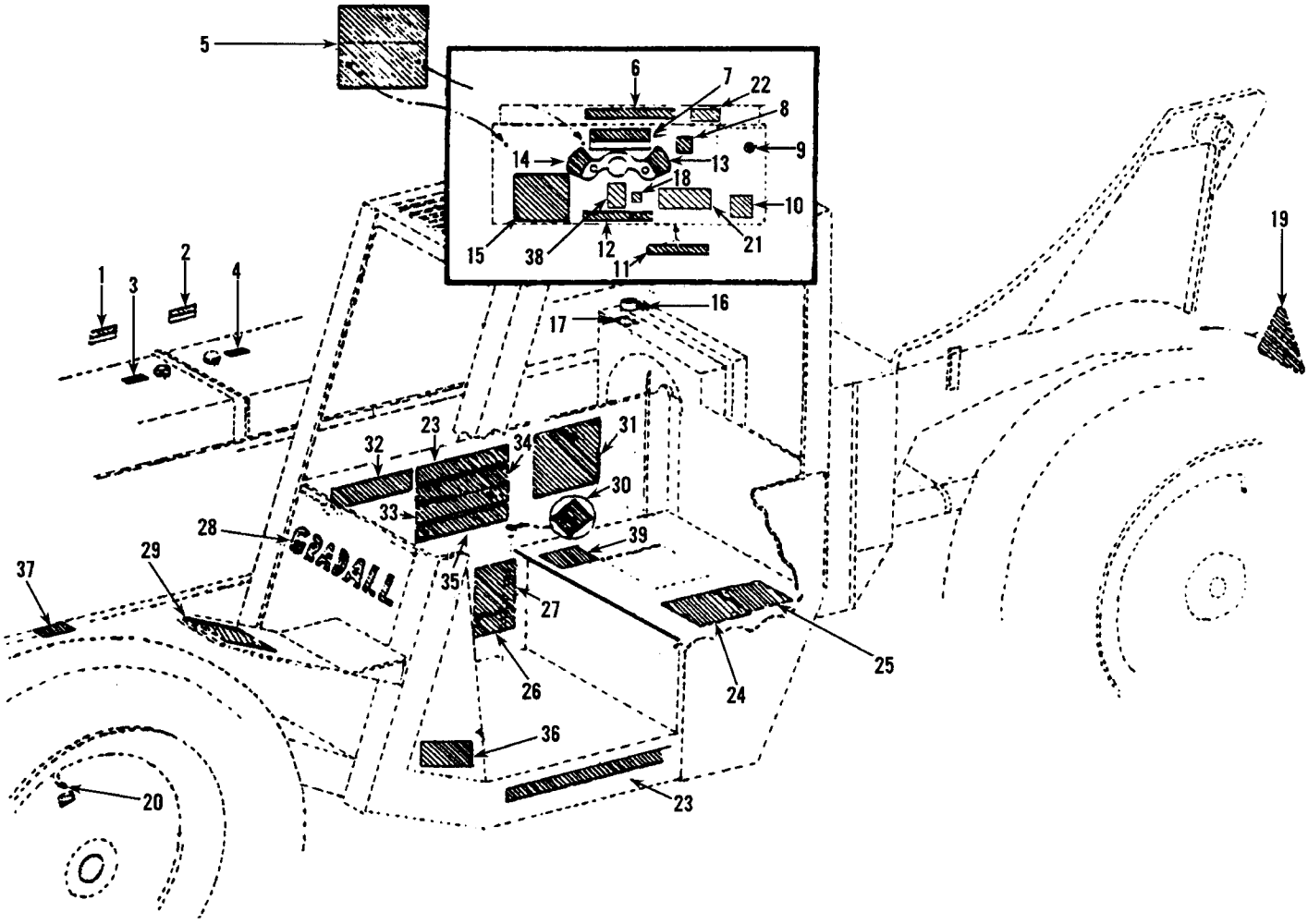

Item	Part No.	Qty.	Description Of Part
1	9100-3051	1	WARNING DECAL
2	9100-3052	1	WARNING DECAL
3	7702-3006	1	HYDRAULIC OIL DECAL
4	7702-3008	1	DIESEL FUEL DECAL
5	9103-3020	1	LIFT CAPACITY DECAL (6000# unit)
	9103-3021	1	LIFT CAPACITY DECAL (8000# unit)
	9020-7488	1	MOUNTING PLATE
	8820-4912	2	HEX HD CAPSCREW, 1/4-20X1, GR5
	8856-1107	2	FLAT WASHER, 1/4
	8852-1304	2	HEX LOCKNUT
6	9103-3014	1	WARNING DECAL
7	9103-3010	1	WARNING DECAL
8	9100-3041	1	TRANSMISSION TEMP. DECAL
9	9103-3025	1	BRAKE DECAL
10	9103-3089	1	DASH DECAL
11	9103-3022	1	REAR DRIVE DECAL
12	9103-3024	1	HUB LOCKOUT DECAL
13	9100-3039	1	SHIFT DECAL
14	9100-3040	1	FORWARD-REVERSE DECAL
15	9103-3012	1	TILT & SWAY DECAL
16	9103-3011	1	WARNING DECAL
17	9100-3032	1	COOLANT DECAL
18	9103-3244	1	AUXILIARY CONTROL DECAL
19	9103-3094	1	SLOW MOVING VEHICLE EMBLEM

Item	Part No.	Qty.	Description Of Part
20	9103-3009	4	TIRE PRESSURE DECAL
21	9103-3157	1	CAUTION DECAL
22	9103-3135	1	BRAKE WARNING DECAL
23	9100-3036	2	OPERATOR PROTECTION DECAL
24	9103-3026	1	MICO DECAL
25	9103-3027	1	LOCK PLATE
26	9100-3002	1	ATTACHMENT CAPACITY PLATE
	8834-4901	4	DRIVE SCREW, #10X1/2
27	9103-3001	1	SERIAL NO. PLATE
	8834-4901	4	DRIVE SCREW, #10X1/2
28	8364-1675	1	"GRADALL" DECAL, WHITE
29	8360-1011	1	DANGER DECAL
30	9100-3044	1	BOOM OPERATOR DECAL
31	9103-3019	1	SERVICE DECAL (Waukesha)
	9103-3249	1	SERVICE DECAL (Perkins)
32	9100-3030	1	PATENT DECAL
33	9100-3029	1	WARNING DECAL
34	9100-3050	1	WARNING DECAL
35	9020-6140	1	RUB PLATE
36	7702-3003	1	CLIMBING DECAL
37	9103-3044	1	ACCUMULATOR DECAL (Waukesha)
38	9103-3090	1	TRUSS BOOM WINCH DECAL
39	9102-3006	1	STABILIZER DECAL

MISCELLANEOUS
Frame Decals
Starting Serial No. 0144637J
Original Issue 6-89
Revised 8-6-99

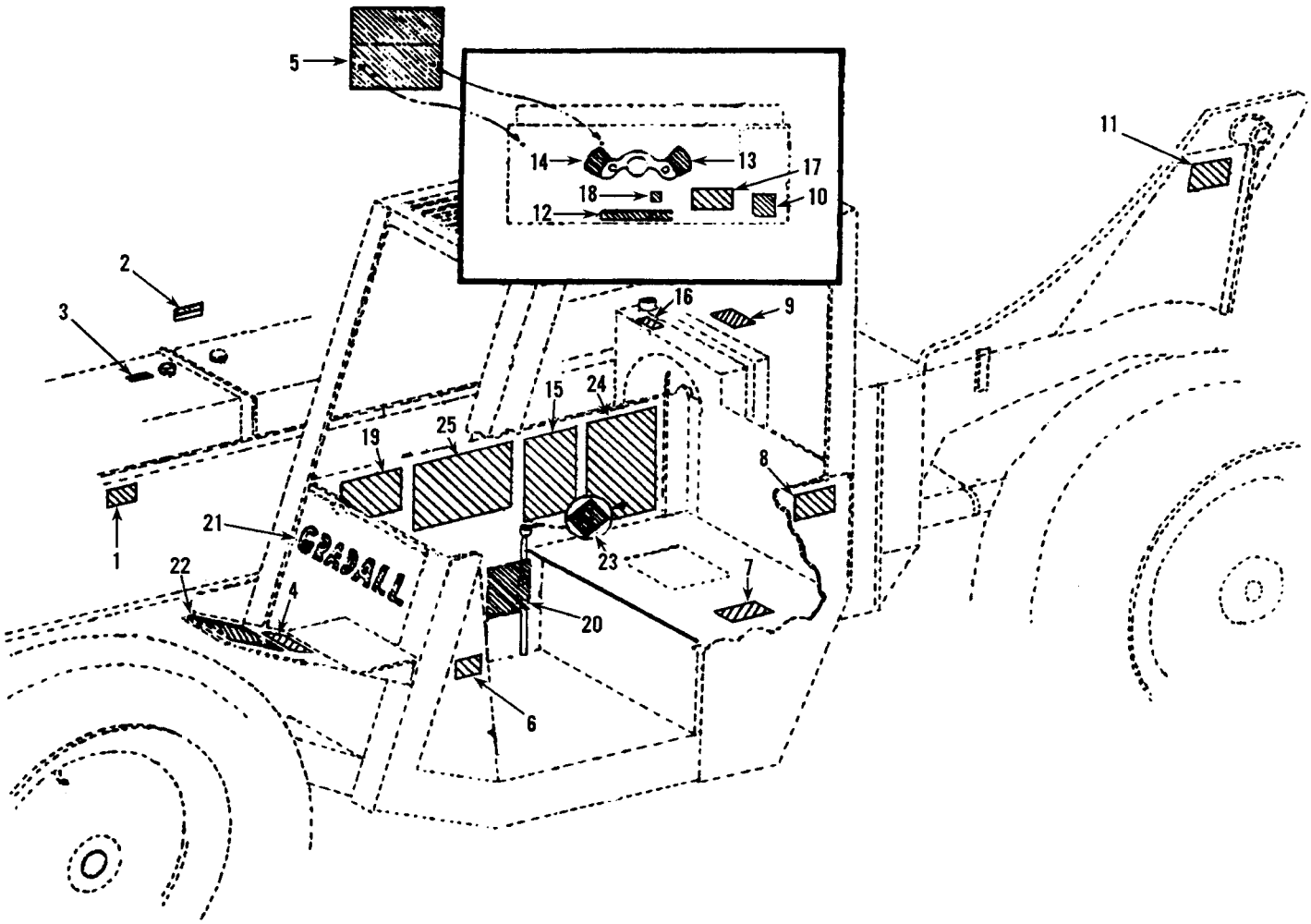

Item	Part No.	Qty.	Description Of Part
1	7702-3007	1	BATTERY INSTRUCTION STICKER
2	9100-3052	1	WARNING DECAL
3	7702-3006	1	HYDRAULIC OIL DECAL
4	9104-3215	1	WARNING DECAL
5	9103-3311	1	LIFT CAPACITY DECAL (8K units)
	9103-3020	1	LIFT CAPACITY DECAL (6K units)
6	9104-3211	1	RIDER WARNING DECAL
7	9104-3129	1	PARKING BRAKE DECAL
8	7733-3027	1	MADE IN U.S.A. DECAL
9	7734-3018	1	HOT EXHAUST DECAL
10	9103-3089	1	DASH DECAL
11	9104-3209	2	PINCH POINT DECAL
12	9103-3024	1	HUB LOCKOUT DECAL
13	9100-3039	1	SHIFT DECAL
14	9100-3040	1	FORWARD-REVERSE DECAL

Item	Part No.	Qty.	Description Of Part
15	9103-3242	1	6' MAST DECAL (8K units)
	9103-3243	1	6' MAST DECAL (6K units)
16	9103-3011	1	WARNING DECAL
17	9103-3362	1	CAUTION DECAL
18	9103-3244	1	AUXILIARY CONTROL DECAL
19	9100-3030	1	PATENT DECAL
20	9103-3278	1	S/N & ATTACHMENT PLATE (6K units)
	9103-3279	1	S/N & ATTACHMENT PLATE (8K units)
21	8364-1675	1	"GRADALL" DECAL, WHITE
22	8360-1011	1	DANGER DECAL
23	9100-3044	1	BOOM OPERATING DECAL
24	9103-3312	1	SERVICE DECAL
25	9106-3047	1	WARNING DECAL

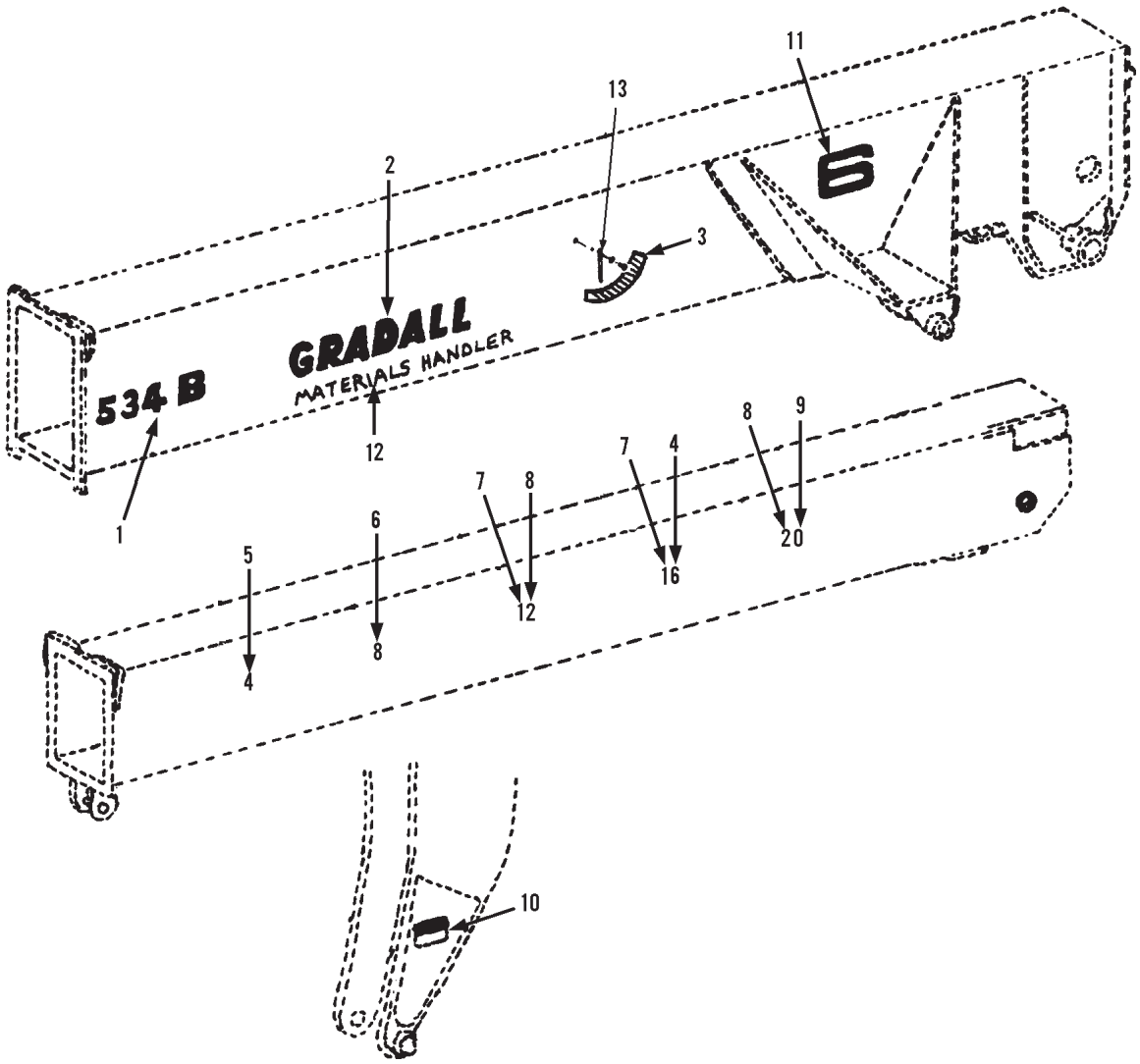

Item	Part No.	Qty.	Description Of Part
1	9103-3003	2	"534B" DECAL, STANDARD (white)
	9103-3002	2	"534B" DECAL, OPTIONAL (black)
2	9100-3006	2	"GRADALL" DECAL, STANDARD (white)
	9104-3132	2	"GRADALL" DECAL, OPTIONAL (black)
3	9100-3031	1	BOOM ANGLE INDICATOR
4	9100-3025	1	"6" DECAL, STANDARD (white)
	9104-3137	1	"6" DECAL, OPTIONAL (black)
5	9100-3020	1	"4" DECAL, STANDARD (white)
	9104-3136	1	"4" DECAL, OPTIONAL (black)
6	9100-3027	1	"8" DECAL, STANDARD (white)
	9104-3138	1	"8" DECAL, OPTIONAL (black)
7	9100-3016	2	"1" DECAL, STANDARD (white)
	9104-3134	2	"1" DECAL, OPTIONAL (black)
8	9100-3018	2	"2" DECAL, STANDARD (white)
	9104-3135	2	"2" DECAL, OPTIONAL (black)

Item	Part No.	Qty.	Description Of Part
9	9100-3014	2	"0" DECAL, STANDARD (white)
	9104-3133	2	"0" DECAL, OPTIONAL (black)
10	9103-3023	1	WARNING DECAL
11	9103-3018	2	"6" DECAL, STANDARD (white)
	9103-3218	2	"6" DECAL, OPTIONAL (black)
	9103-3016	2	"8" DECAL, STANDARD (white)
	9103-3216	2	"8" DECAL, OPTIONAL (black)
12	9104-3039	2	"MATERIALS HANDLER" DECAL, STANDARD (white)
	9104-3038	2	"MATERIALS HANDLER" DECAL, OPTIONAL (black)
*13	9020-0445	1	BOOM ANGLE INDICATOR
*	9020-0688	1	BEARING
*	8856-1111	1	FLAT WASHER, 1/2
*	9002-6491	1	SHOULDER BOLT

** Revised illustration and changed item 13.*

MISCELLANEOUS
Boom Decals
Starting Serial No. 0144637J
Original Issue 6-89
Revised 11-09-05

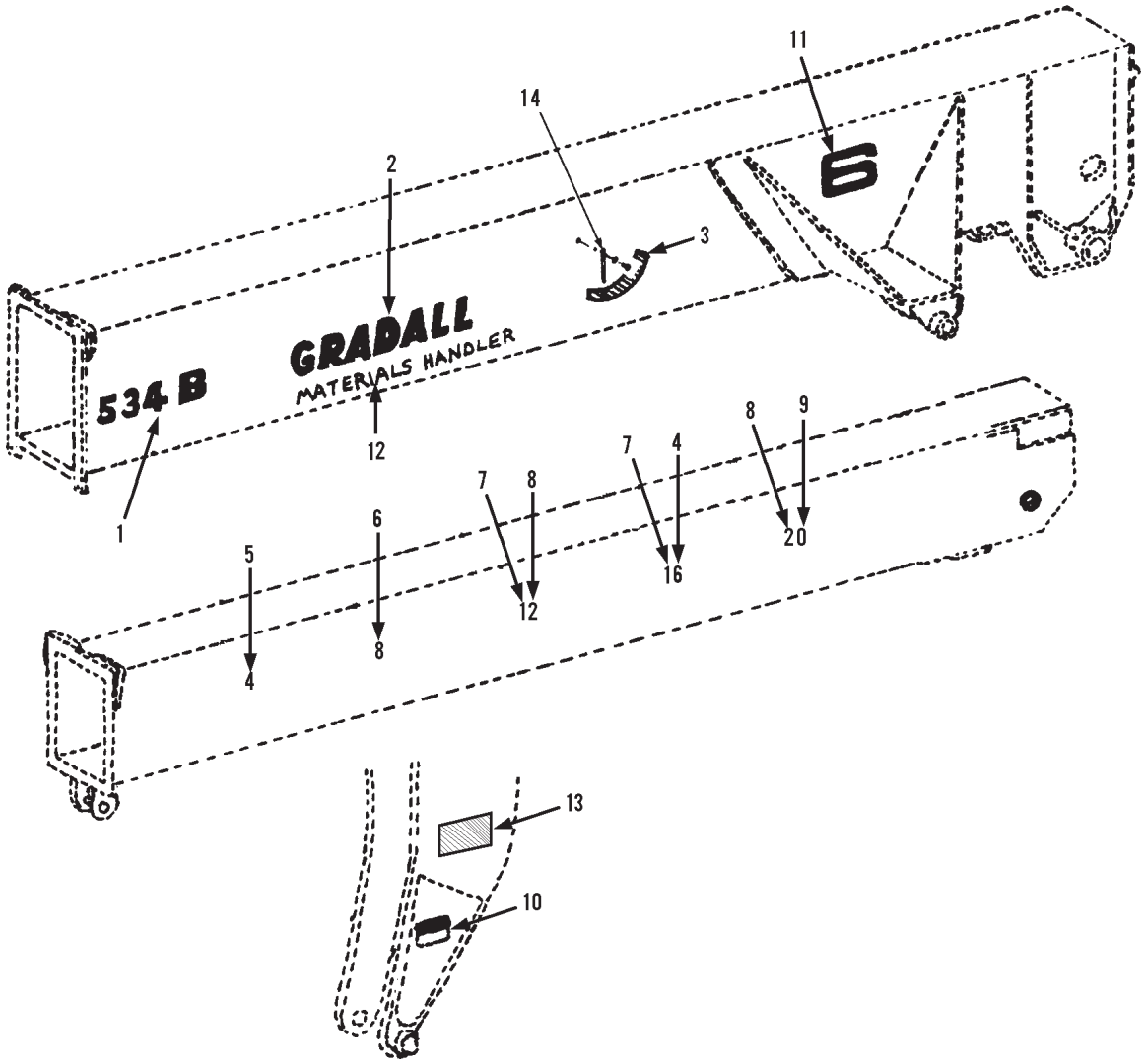

Item	Part No.	Qty.	Description Of Part
1	9103-3003	2	"534B" DECAL, STANDARD (white)
	9103-3002	2	"534B" DECAL, OPTIONAL (black)
2	9100-3006	2	"GRADALL" DECAL, STANDARD (white)
	9104-3132	2	"GRADALL" DECAL, OPTIONAL (black)
3	9100-3031	1	BOOM ANGLE INDICATOR
4	9100-3025	1	"6" DECAL, STANDARD (white)
	9104-3137	1	"6" DECAL, OPTIONAL (black)
5	9100-3020	1	"4" DECAL, STANDARD (white)
	9104-3136	1	"4" DECAL, OPTIONAL (black)
6	9100-3027	1	"8" DECAL, STANDARD (white)
	9104-3138	1	"8" DECAL, OPTIONAL (black)
7	9100-3016	2	"1" DECAL, STANDARD (white)
	9104-3134	2	"1" DECAL, OPTIONAL (black)
8	9100-3018	2	"2" DECAL, STANDARD (white)
	9104-3135	2	"2" DECAL, OPTIONAL (black)

Item	Part No.	Qty.	Description Of Part
9	9100-3014	2	"0" DECAL, STANDARD (white)
	9104-3133	2	"0" DECAL, OPTIONAL (black)
10	9103-3023	1	WARNING DECAL
11	9103-3018	2	"6" DECAL, STANDARD (white)
	9103-3218	2	"6" DECAL, OPTIONAL (black)
	9103-3016	2	"8" DECAL, STANDARD (white)
	9103-3216	2	"8" DECAL, OPTIONAL (black)
12	9104-3039	2	"MATERIALS HANDLER" DECAL, STANDARD (white)
	9104-3038	2	"MATERIALS HANDLER" DECAL, OPTIONAL (black)
13	8360-1011	1	WARNING DECAL
*14	9020-0445	1	BOOM ANGLE INDICATOR
*	9020-0688	1	BEARING
*	8856-1108	1	FLAT WASHER, 1/2
*	9002-6491	1	SHOULDER BOLT

** Revised illustration, added items 13 & 14, and fixed part number on item 3.*

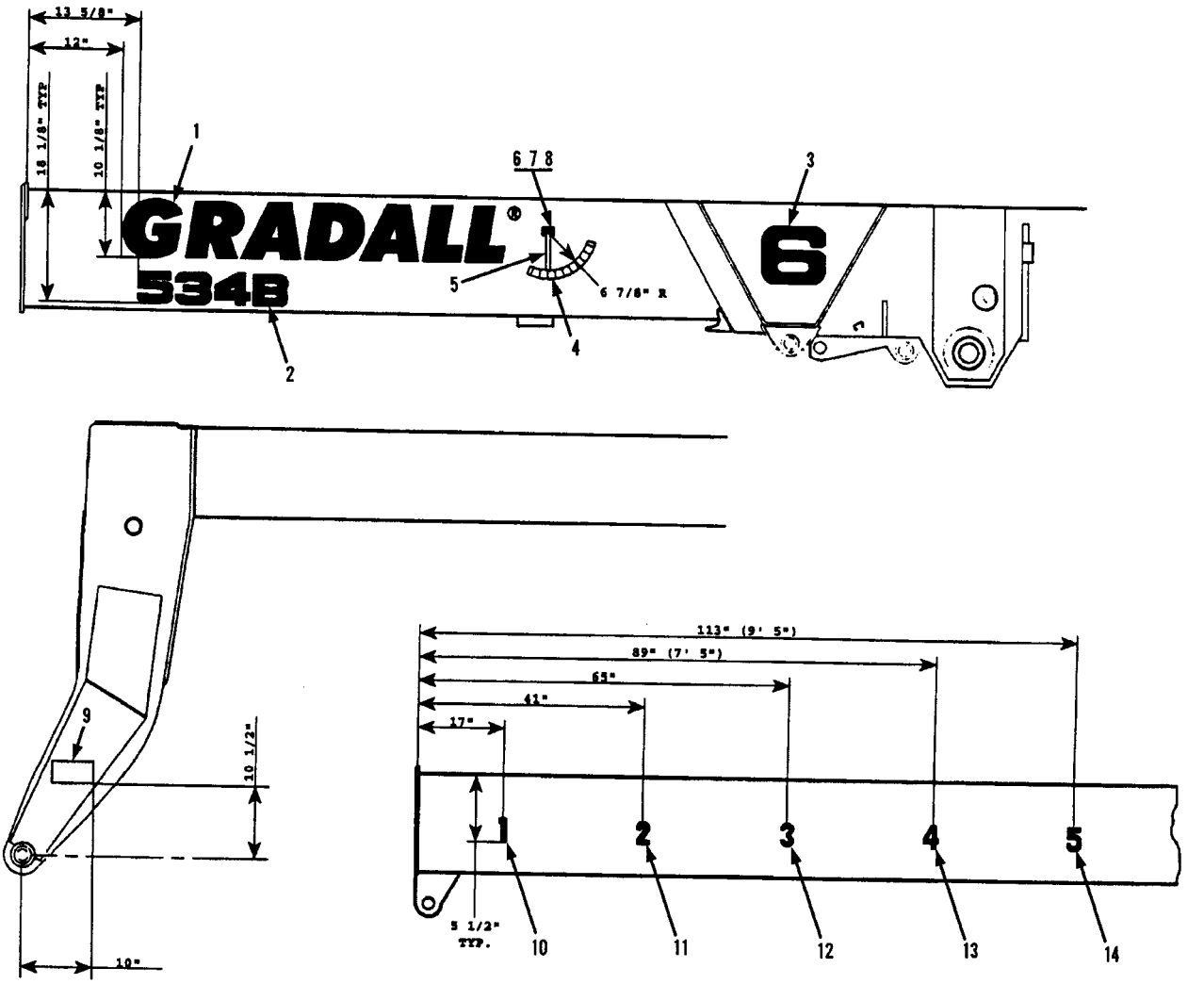

Item	Part No.	Qty.	Description Of Part	Item	Part No.	Qty.	Description Of Part
1	9112-3037	2	"GRADALL" DECAL, WHITE	9	9103-3023	1	QUICK SWITCH DECAL
	9112-3038	2	"GRADALL" DECAL, BLACK	10	9100-3016	1	"1" DECAL, WHITE
2	9103-3392	2	"534B" DECAL, WHITE		9104-3134	1	"1" DECAL, BLACK
	9103-3393	2	"534B" DECAL, BLACK	11	9100-3018	1	"2" DECAL, WHITE
3	9103-3018	2	"6" DECAL, WHITE		9104-3135	1	"2" DECAL, BLACK
	9103-3218	2	"6" DECAL, BLACK	12	9112-3042	1	"3" DECAL, WHITE
4	9100-3031	1	BOOM ANGLE DECAL, WHITE		9112-3043	1	"3" DECAL, BLACK
5	9020-0445	1	PENDULUM	13	9100-3020	1	"4" DECAL, WHITE
6	9020-0688	1	BEARING		9104-3136	1	"4" DECAL, BLACK
7	9002-6491	1	SHOULDER BOLT, 1/4-20	14	9112-3044	1	"5" DECAL, WHITE
8	8856-1108	1	FLAT WASHER, 5/16		9112-3045	1	"5" DECAL, BLACK

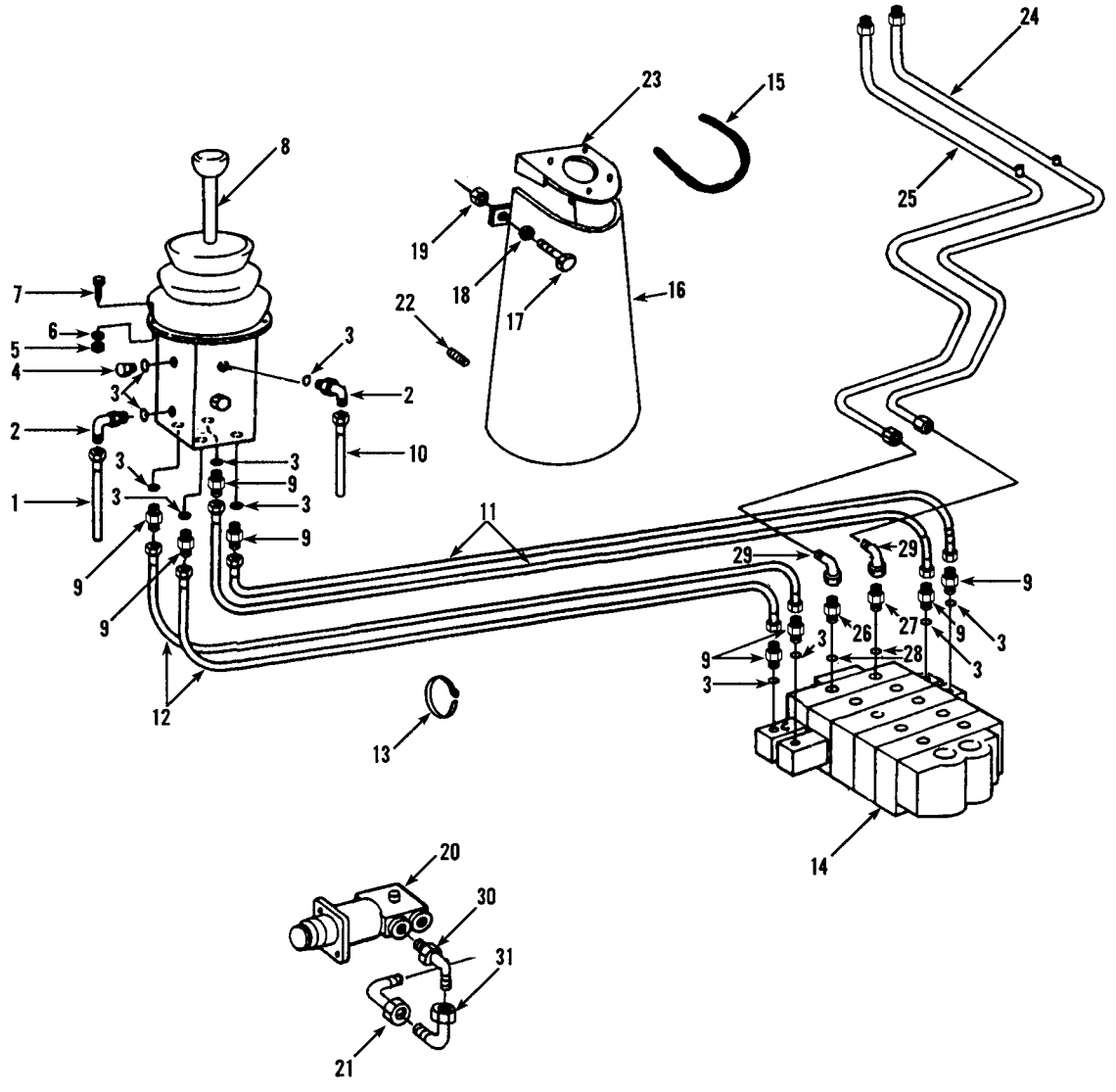

Item	Part No.	Qty.	Description Of Part
	9104-5173		JOYSTICK INSTALLATION (includes all items)
1	8471-7587	1	HOSE ASSY
2	8866-2064	2	ELBOW, 90 DEGREES (includes item 3)
3	8859-1204	12	O-RING
4	8866-2174	2	HEX HD PLUG (includes item 3)
5	8850-1004	4	HEX NUT, 1/4-20
6	8855-1009	4	LOCKWASHER, 1/4
7	8820-1004	4	HEX HD CAPSCREW, 1/4-20X7/8 GR5
8	9104-3064	1	HYDRAULIC CONTROLLER ASSY
9	8866-2005	8	CONNECTOR (includes item 3)
10	7713-3167	1	HOSE ASSY
11	8471-7458	2	HOSE ASSY
12	8471-7519	2	HOSE ASSY
13	9002-7187	7	NYLON TIE WRAP
14	9104-3065	1	MAIN CONTROL VALVE
15	9020-6192	17"	TRIM LOK
16	9104-6056	1	JOYSTICK COVER

Item	Part No.	Qty.	Description Of Part
17	8820-1018	2	HEX HD CAPSCREW, 5/16-18X3/4 GR5
18	8855-1010	2	LOCKWASHER, 5/16
19	8850-1005	2	HEX NUT, 5/16-18
20	9103-3307	1	BRAKE VALVE
21	8866-2105	1	ELBOW-90 DEGREES (swivel nut)
22	8505-1384	2	WELD STUD, 5/16-18X1
23	9104-6047	1	JOYSTICK MOUNT WELDMENT
24	9104-3095	1	TUBE ASSY
25	9104-3096	1	TUBE ASSY
26	8866-2038	1	CONNECTOR (includes item 28)
27	8866-2008	1	CONNECTOR (includes item 28)
28	8859-1207	2	O-RING
29	8866-2108	2	ELBOW-90 DEGREES (swivel nut)
30	8866-2064	1	ELBOW-90 DEGREES (includes o-ring)
	8859-1204	1	O-RING
31	7713-1088	1	ELBOW -90 DEGREES

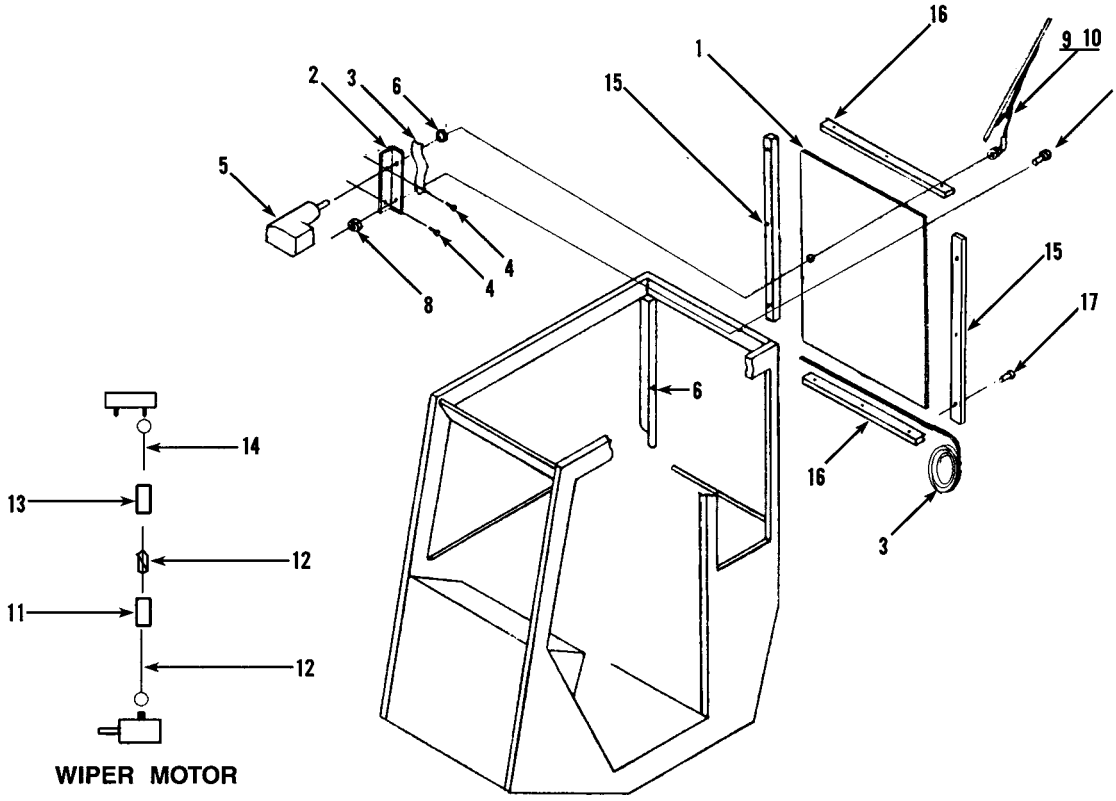

Item	Part No.	Qty.	Description Of Part
	9040-3109		REAR WIPER INSTALLATION (includes items 2 thru 14)
1	9040-3035	Ref	REAR WINDOW
2	9020-6025	1	WIPER MOTOR MOUNT
3	9020-0755	AR	WEATHER STRIPPING
4	9002-7319	2	SELF TAPPING SCREW, 1/4-20X1
5	9020-6023	1	WIPER MOTOR
6	9002-7214	2	GROMMET
7	8820-1003	1	HEX HD CAPSCREW, 1/4-20X3/4 GR5
8	8850-1004	1	HEX NUT, 1/4-20
9	9020-6024	1	WIPER BLADE
10	9020-6374	1	WIPER ARM
11	9020-6312	1	JUMPER WIRE
12	8668-3480	2	CRIMP ON CONNECTOR
13	9020-3376	1	FUSE
14	9020-0349	1	JUMPER WIRE
15	9020-6019	Ref	WINDOW HOLD DOWN BAR
16	9020-6018	Ref	WINDOW HOLD DOWN BAR
17	9002-7315	Ref	SELF TAPPING SCREW, 1/4-20X1-1/4

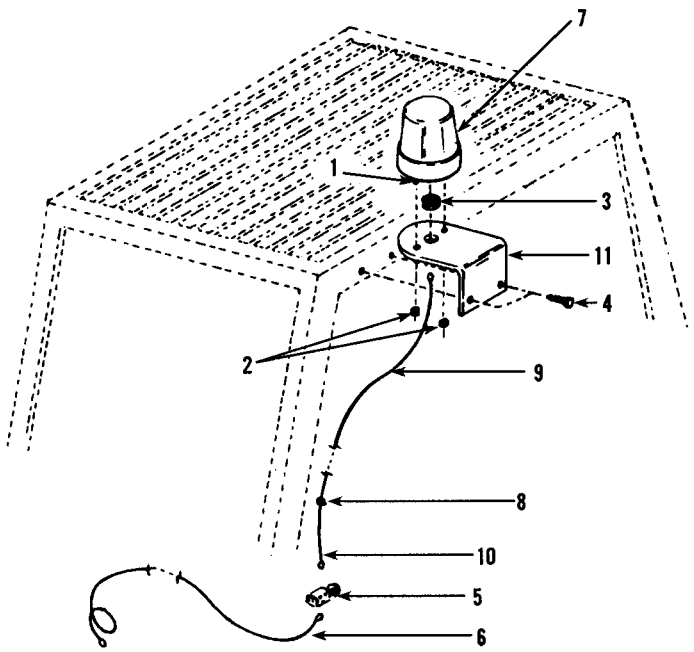

Item	Part No.	Qty.	Description Of Part
	9103-5007		ROTATING BEACON ASSY (includes all items)
1	8820-1014	2	HEX HD CAPSCREW, 1/4-20X3-1/4 GR5
2	8850-1004	2	HEX NUT, 1/4-20
3	9002-7214	2	BUTTON GROMMET
4	9002-7316	3	SELF TAPPING SCREW
5	9020-0171	1	SWITCH
6	9020-0352	1	JUMPER WIRE
7	9020-0685	1	ROTATING BEACON
8	9020-2303	1	BUTTON GROMMET
9	9020-6132	1	JUMPER WIRE
10	9020-6133	1	JUMPER WIRE
11	9040-0706	1	BEACON BRACKET

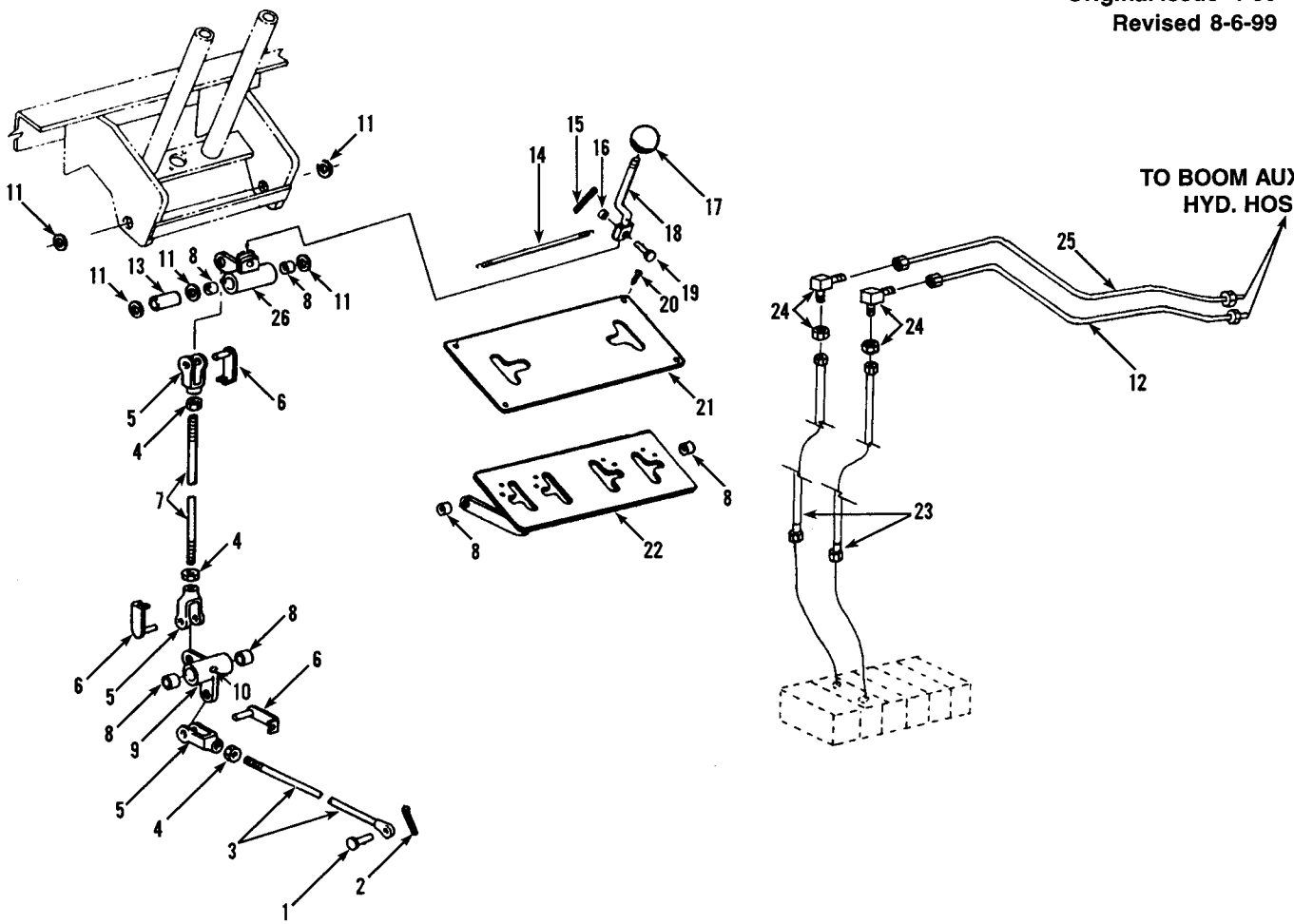

Item	Part No.	Qty.	Description Of Part
	9104-5022	Ref	AUXILIARY HYDRAULIC ASSY (includes all items)
1	9002-1552	1	CLEVIS PIN
2	8863-1301	1	COTTER PIN, 1/16X1/2
3	9104-6051	1	CONTROL ROD
4	8850-1406	3	HEX JAM NUT, 3/8-24
5	8882-1004	3	ADJUSTABLE YOKE END, 3/8-24
6	9002-7987	3	SPRING CLEVIS
7	9020-2361	1	ROD
8	9020-0290	6	NEEDLE BEARING
9	9020-5533	1	BELLCRANK
10	8867-1008	1	LUBE FITTING, STRAIGHT, 1/4-28
11	8856-1113	10	FLAT WASHER, 5/8
12	9020-7393	1	TUBE ASSY
13	9103-1189	1	SPACER
14	9020-0559	1	SPRING
15	8863-1309	1	COTTER PIN, 3/32X3/4
16	9020-0688	1	BEARING
17	9020-0299	1	KNOB
18	9020-5981	1	HANDLE
19	9002-1557	1	CLEVIS PIN
20	9002-0489	4	PAN HEAD SCREW, #2
21	9020-6045	1	CONTROL PANEL
22	9040-2904	1	CONTROL PANEL
23	9002-2046	2	HOSE ASSY
24	9002-9938	2	BULKHEAD FITTING - 90 DEGREE (includes nut)
25	9104-3196	1	TUBE ASSY
26	9020-5983	1	BELLCRANK

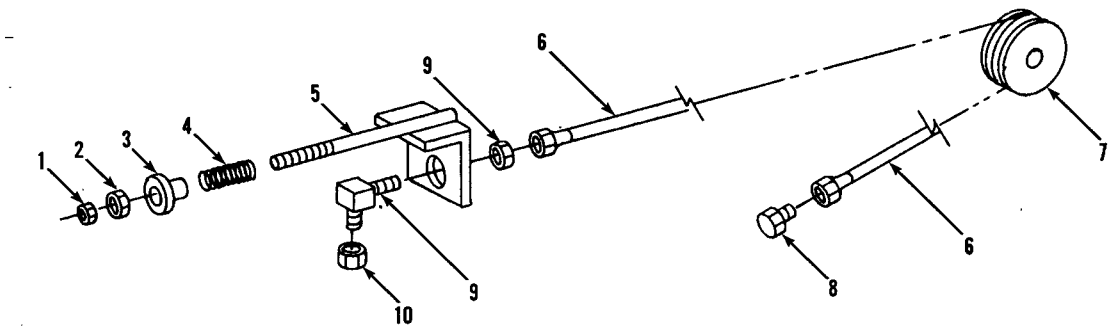

Item	Part No.	Qty.	Description Of Part
	9103-5133	Ref	WINCH DRAIN LINE PARTS (includes all items)
1	8850-1108	1	HEX JAM NUT, 1/2-13
2	8850-1008	1	HEX NUT, 1/2-13
3	9020-7041	1	SPRING RETAINER
4	9020-0313	1	SPRING
5	9040-3249	1	HOSE TAKE-UP WELDMENT
6	9020-6888	1	HOSE ASSY
7	9104-3101	1	HOSE TAKE-UP SHEAVE
8	8866-1385	1	HEX HD PLUG, 1/2
9	9002-7180	1	90 DEGREE BULKHEAD FITTING (includes nut)
10	8866-1365	1	HEX CAP, 1/2

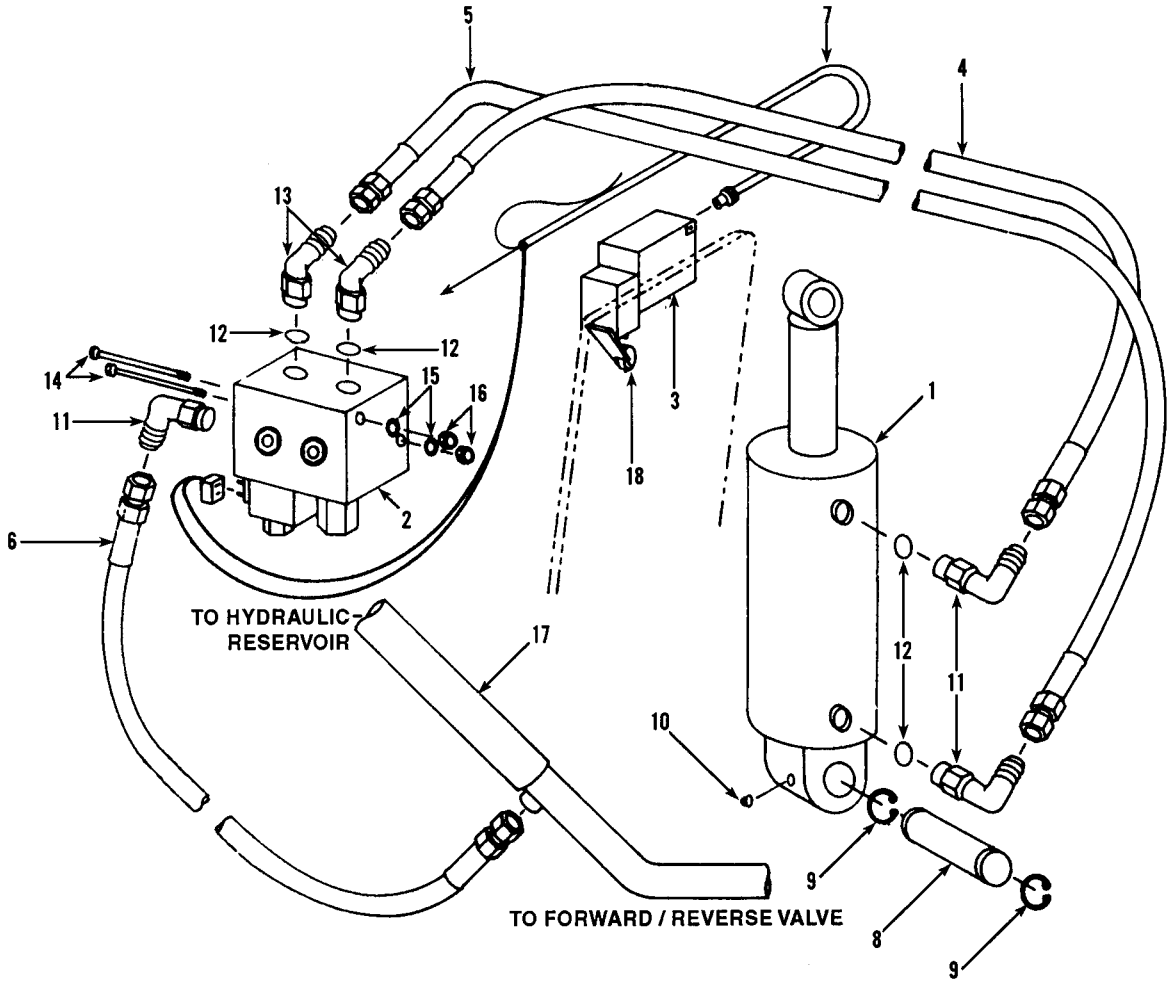

Item	Part No.	Qty.	Description Of Part
1	9104-3274	1	STABILIZER CYLINDER
2	9111-3003	1	STABILIZER VALVE
3	9104-3123	1	SWITCH (includes item 18)
4	8471-7847	1	HOSE ASSY
5	8471-7848	1	HOSE ASSY
6	8471-6426	1	HOSE ASSY
7	9104-5034	1	BOOM SWITCH HARNESS
8	9104-1227	2	PIN
9	8858-1140	4	RETAINING RING
10	8867-1008	2	LUBE FITTING, STRAIGHT 1/4-28

Item	Part No.	Qty.	Description Of Part
11	8866-2065	3	ELBOW, 90 DEGREES (includes item 12)
12	8859-1205	5	O-RING
13	8866-2085	2	ELBOW, 45 DEGREES (includes item 12)
14	8320-1073	2	HEX HD SCREW, 3/8-16X4-1/2
15	8855-1011	2	LOCKWASHER, 3/8
16	8850-1006	2	HEX NUT, 3/8-16
17	9104-3144	1	DUMP TUBE
18	9104-4475	1	LEVER/ROLLER ASSY

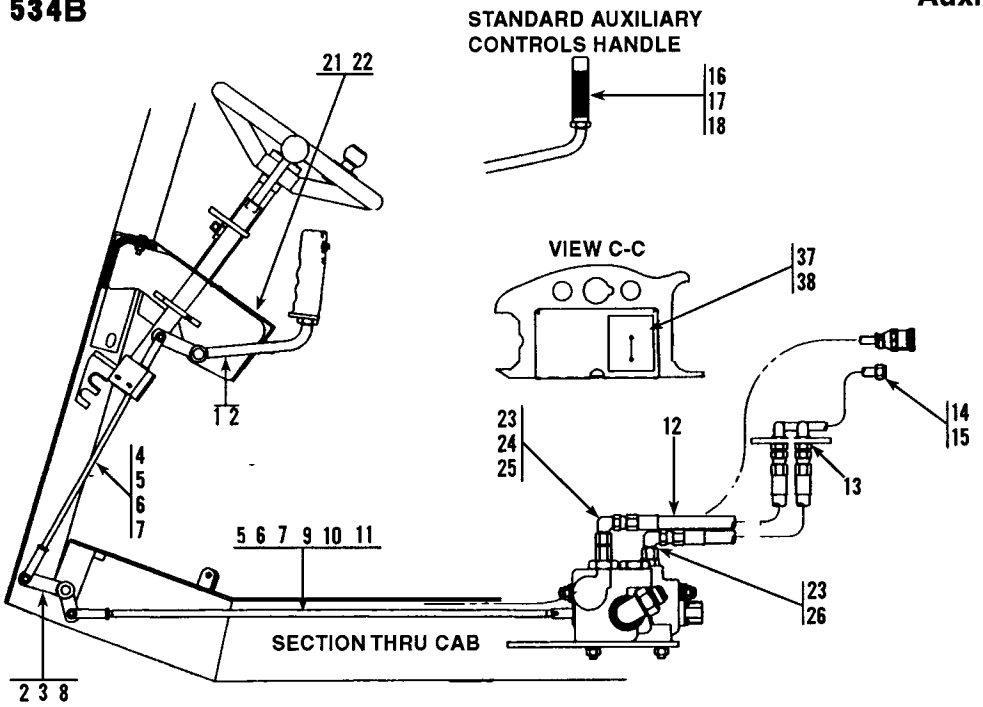
STANDARD AUXILIARY CONTROLS HANDLE
16
17
18
21 22
VIEW C-C
37
38
1 2
23
24
25
12
14
15
13
4
5
6
7
5 6 7 9 10 11
23
26
SECTION THRU CAB
2 3 8

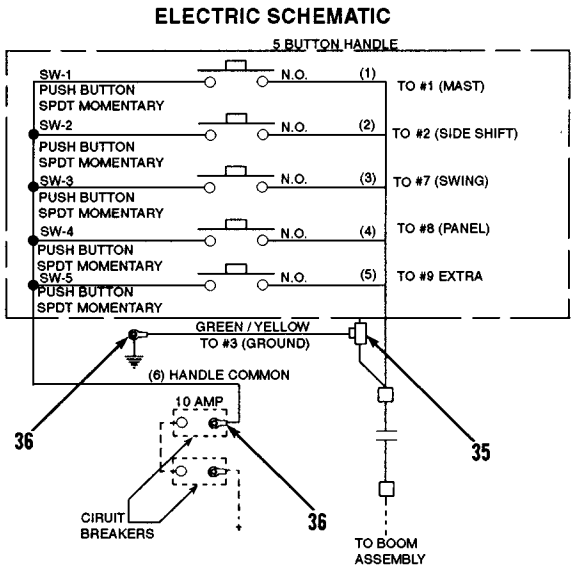
ELECTRIC SCHEMATIC
5 BUTTON HANDLE
SW-1
PUSH BUTTON
SPDT MOMENTARY
N.O.
(1)
TO #1 (MAST)
SW-2
PUSH BUTTON
SPDT MOMENTARY
N.O.
(2)
TO #2 (SIDE SHIFT)
SW-3
PUSH BUTTON
SPDT MOMENTARY
N.O.
(3)
TO #7 (SWING)
SW-4
PUSH BUTTON
SPDT MOMENTARY
N.O.
(4)
TO #8 (PANEL)
SW-5
PUSH BUTTON
SPDT MOMENTARY
N.O.
(5)
TO #9 EXTRA
GREEN / YELLOW
TO #3 (GROUND)
(6) HANDLE COMMON
10 AMP
CIRUIT
BREAKERS
36
36
35
TO BOOM
ASSEMBLY

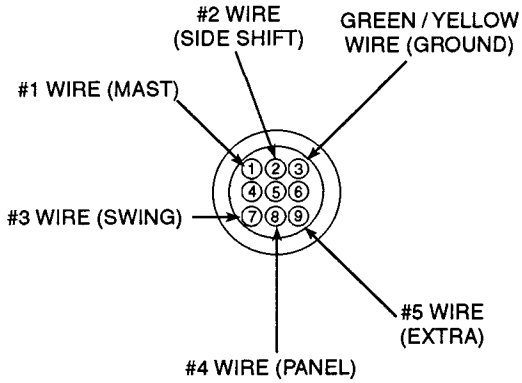
#2 WIRE
(SIDE SHIFT)
GREEN / YELLOW
WIRE (GROUND)
#1 WIRE (MAST)
#3 WIRE (SWING)
#5 WIRE
(EXTRA)
#4 WIRE (PANEL)

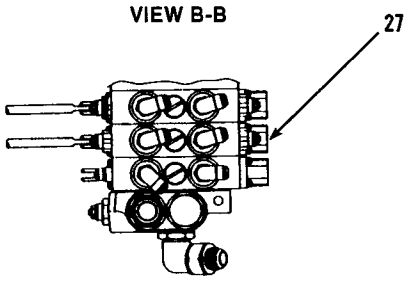
VIEW B-B
27

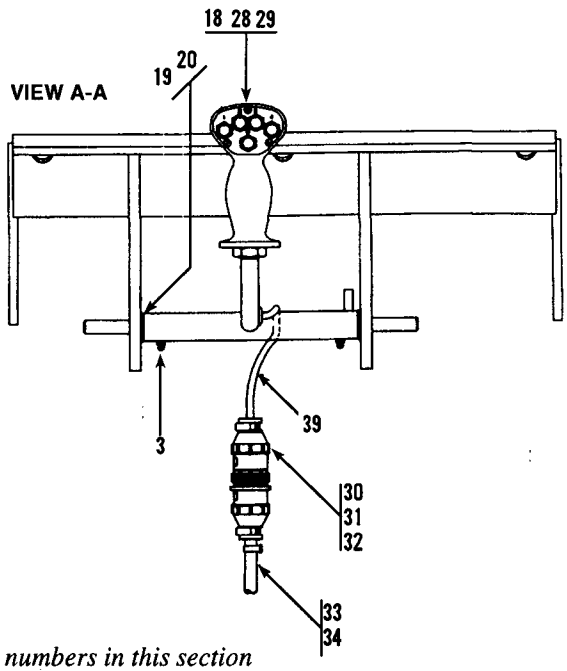
VIEW A-A
18 28 29
20
19
3
39
30
31
32
33
34

Item	Part No.	Qty.	Description Of Part
	9103-5220	Ref	AUXILIARY CONTROLS ASSEMBLY (includes items 1 thru 22, & item 38)
	9103-5221	Ref	AUXILIARY FIELD INSTALLATION (includes items 1 thru 27, & item 38)
	9103-5222	Ref	AUXILIARY ELECTRIC INSTALLATION (includes items 28 thru 37, & item 39)
1	9103-6107	1	AUXILIARY HANDLE WELDMENT
2	9020-0290	4	BEARING
3	8867-1008	3	LUBE FITTING, STRAIGHT 1/4-28
4	9020-2361	1	LINKAGE ROD
5	8882-1004	3	ADJUSTABLE YOKE END
6	9002-7987	3	SPRING CLEVIS
7	8850-1406	3	HEX JAM NUT, 3/8-24
8	9020-5533	1	BELLCRANK
9	9104-6051	1	LINKAGE ROD
10	9002-1552	1	CLEVIS PIN
11	8863-1301	1	COTTER PIN, 1/16X1/2
12	9002-2043	2	HOSE ASSY
13	9002-9938	2	90 DEGREE BULKHEAD ELBOW
14	9020-7393	1	TUBE ASSY
15	9104-3196	1	TUBE ASSY
16	9103-1465	1	HANDLE INSERT
17	9020-0774	1	HANDLE GRIP
18	8850-1112	1	HEAVY HEX JAM NUT, 3/4-10
19	8856-1115	4	FLAT WASHER, 3/4
20	9002-8662	2	WAVE BEND WASHER
21	9103-1464	1	COVER PANEL
22	8832-1015	REF	SELF TAPPING SCREW, #6-32X1/2
23	8866-2107	2	ELBOW, 90 DEGREES (swivel nut)
24	8692-3006	1	ADAPTER, 3/4X5/8
25	8866-2008	1	CONNECTOR (includes o-ring)
	8859-1207	1	O-RING
26	8866-2022	1	CONNECTOR (includes o-ring)
	8859-1207	1	O-RING
27	9103-3239	1	CONVERSION KIT
28	9103-3387	1	5 BUTTON HANDLE
29	9103-3425	1	GROMMET
30	9002-8956	1	CONNECTOR BODY
31	9002-8958	6	TERMINAL
32	9002-8978	1	CABLE CLAMP
33	9040-3396	1	AUXILIARY WIRING HARNESS
34	9002-7187	4	TY-RAP
35	9002-8968	1	CONNECTOR
36	9103-3391	2	INSULATED RING TERMINAL
37	9103-3394	1	AUXILIARY CONTROL DECAL
38	9103-3417	1	AUXILIARY CONTROL DECAL
39		12"	LOOM, 5/16" I.D.

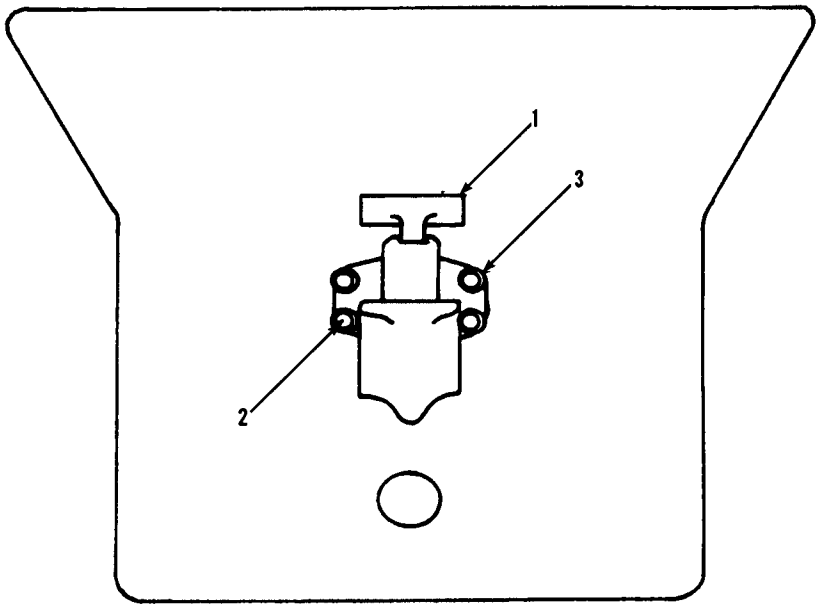

Item	Part No.	Qty.	Description Of Part
	9103-5101	Ref	PINTLE HOOK INSTALLATION (includes all items)
1	9020-0602	1	PINTLE
2	8320-1120	4	HEX HD CAPSCREW, 1/2-13X1-3/4 GR8
3	8855-1013	4	LOCKWASHER, 1/2

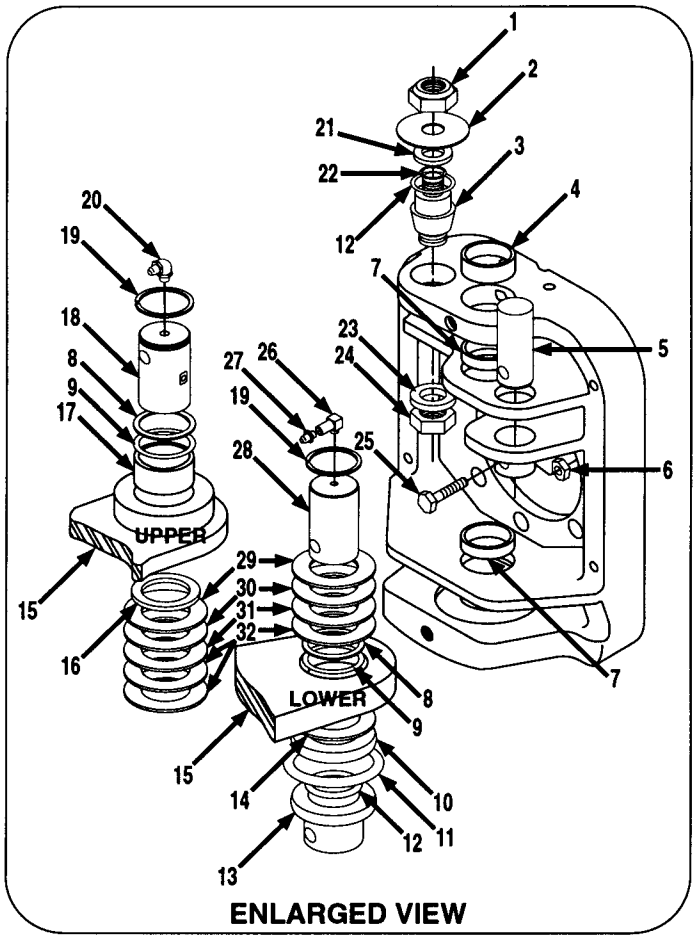

NOTE #1: CUSTOMER TO USE EXISTING WHEEL HUBS & HARDWARE, DRIVE MOTORS, DRIVE MOTOR TUBE ASSEMBLIES, AND DRAIN LINE HOSES OR ORDER SEPARATELY IF REPLACEMENT IS REQUIRED.

NOTE #2: CYLINDER BASE END MUST BE FREE TO ROTATE. SHIM STEER CYLINDER BASE END AS REQUIRED TO MAINTAIN A TOTAL MAX. GAP OF 1/16".

NOTE #3: SHIM BOTTOM KNUCKLES AS REQUIRED TO MAINTAIN NO MORE THAN 1/32" MOVEMENT. SHIM TOP KNUCKLES AS REQUIRED TO MAINTAIN NO MORE THAN 1/16" GAP. MUST HAVE A MINIMUM OF ONE SHIM.

NOTE #4: ITEM 55 TO BE USED WITH FAIRFIELD HUBS ONLY.

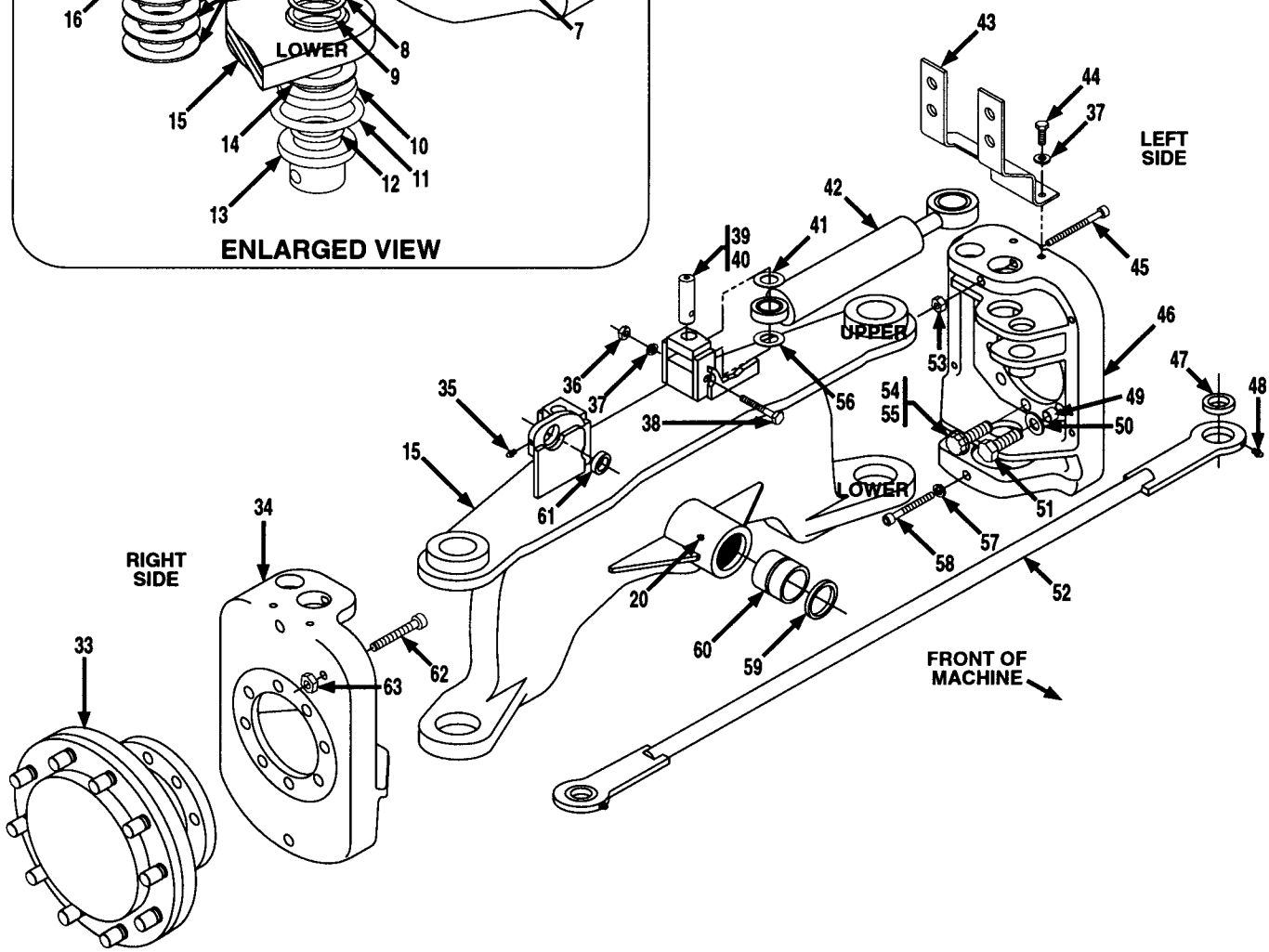

OPTIONAL EQUIPMENT
(9104-5129) Steer Axle Advantage Kit
FOR SERVICE ONLY
Original Issue 3-96
Revised 8-6-99

NOTE #1: CUSTOMER TO USE EXISTING WHEEL HUBS & HARDWARE, DRIVE MOTORS, DRIVE MOTOR TUBE ASSEMBLIES, AND DRAIN LINE HOSES OR ORDER SEPARATELY IF REPLACEMENT IS REQUIRED.

NOTE #2: CYLINDER BASE END MUST BE FREE TO ROTATE. SHIM STEER CYLINDER BASE END AS REQUIRED TO MAINTAIN A TOTAL MAX. GAP OF 1/16".

NOTE #3: SHIM BOTTOM KNUCKLES AS REQUIRED TO MAINTAIN NO MORE THAN 1/32" MOVEMENT. SHIM TOP KNUCKLES AS REQUIRED TO MAINTAIN NO MORE THAN 1/16" GAP. MUST HAVE A MINIMUM OF ONE SHIM.

NOTE #4: ITEM 55 TO BE USED WITH FAIRFIELD HUBS ONLY.

Item	Part No.	Qty.	Description Of Part
	9104-5129	Ref	STEER AXLE ADVANTAGE KIT (includes all items except 33, 50 & 51)
	9103-5240	1	STEERING KNUCKLE KIT (includes items 2,4, 7 thru 14, 16 thru 22, 28 thru 32, 45, 53, 57 & 58 - one kit does both sides)
	9104-5152	Ref	STEERING CYLINDER PIN KIT (includes one each of items 1, 2, 3, 12 & 21 thru 24 - one kit needed for each side)
1	8852-1312	2	HEX LOCKNUT, 3/4-10 (torque to 160-175 ft.lbs.)
2	9108-1415	2	DIRT SHIELD
3	9104-1481	2	STEERING CYLINDER PIN (knuckle end)
4	9112-1239	2	BUSHING
5	9104-1439	2	TIE ROD PIN
6	8852-1306	2	LOCKNUT, 3/8-16
7	9112-1240	4	BUSHING
8	9112-3030	4	BACK-UP RING
9	8859-1032	4	O-RING
10	9112-3027	2	BUSHING (lower)
11	9112-3029	2	O-RING
12	8859-1104	4	O-RING
13	9112-1091	2	THRUST BUSHING
14	9104-1733	AR	SHIM
15	9104-6126	1	REAR AXLE WELDMENT (includes items 10, 17, 60 & 61)
16	8692-1268	2	LIP SEAL
17	9112-3028	2	BUSHING (upper)
18	9108-1693	2	UPPER KING PIN
19	8858-1323	4	RETAINING RING
20	8867-1022	4	LUBE FITTING, 30 DEGREES, 1/8
21	9104-1732	AR	SPACER
	9104-1438	AR	SPACER
22	8859-1019	2	O-RING
23	9104-1459	2	WASHER
24	8850-1416	2	HEX JAM NUT, 1-14 (torque to 225-250 ft. lbs.)
25	8320-1140	2	HEX HD CAPSCREW, 3/8-16X2-3/4, GR8
26	9103-3444	2	STREET ELBOW
27	9103-3445	2	LUBE FITTING
28	9114-1424	2	LOWER KING PIN
29	9104-1596	AR	SHIM (20 gauge thick, see note #3)
30	9104-1449	AR	SHIM (.060 thick, see note #3)
31	9104-1450	AR	SHIM (.0478 thick, see note #3)
32	9104-1451	AR	SHIM (.106 thick, see note #3)
33		2	DRIVE HUB (use existing hubs)
34	9112-0004	1	R.H. STEERING KNUCKLE
35	8867-1008	2	LUBE FITTING, STRAIGHT, 1/4-28
36	8850-1006	2	HEX NUT, 3/8-16
37	8855-1011	6	LOCKWASHER, 3/8
38	8320-1144	2	HEX HD CAPSCREW, 3/8-16X5-3/4, GR5
39	9108-1695	2	STEERING CYLINDER PIVOT PIN (axle end)
40	8871-1280	2	HEX SOCKET PIPE PLUG, 1/8
41	9104-1598	AR	SHIM (see note #2)
42		2	STEERING CYLINDER ASSY (see page 13-10 for details)
43	9108-1523	1	L.H. TUBE SUPPORT
	9108-1522	1	R.H. TUBE SUPPORT
44	8820-1035	4	HEX HD CAPSCREW, 3/8-16X1, GR5
45	8821-1121	2	SOCKET HD CAPSCREW, 1/2-13X6-1/2, GR8
46	9112-0003	1	L.H. STEERING KNUCKLE
47	9104-3247	2	SELF-ALIGNING BUSHING
48	8867-1001	2	LUBE FITTING, STRAIGHT, 1/8
49	9104-1731	16	SPACER
50		12	HARDENED WASHER, 3/4 (use existing hardware)
51		12	HEX HD CAPSCREW, 3/4-10X2 (use existing hardware)
52	9116-6063	1	TIE ROD (includes item 47)
53	8852-1208	2	HEX LOCKNUT, 1/2
54	9104-3222	2	12 PT. SCREW, 3/4-10X2, GR8 (lubricate & torque to 270-290 ft. lbs.) (see note #4)
55	9104-3494	2	12PT. SCREW, 5/8-1X2-1/4, GR8 (torque to 200 ft. lbs.) (see note #4)
56	9020-1918	AR	SHIM (10 gauge thick, see note #2)
57	8855-1153	2	LOCKWASHER, 5/8
58	8821-2321	2	SLOT HD CAPSCREW, 5/8-11X3-3/4, GR8
59	2460-1570	2	LIP SEAL
60	9112-3031	2	BUSHING
61	9104-1489	2	BUSHING
62	8821-2321	2	SOCKET HD CAPSCREW, 5/8-11X3-3/4, GR8
63	8850-1110	2	HEAVY HEX JAM NUT, 5/8-11

OPTIONAL EQUIPMENT
(9103-3499) Steering Cylinder
Steer Axle Advantage Kit (Only)

FOR SERVICE ONLY
Original Issue 1-99
Revised 8-6-99

NOTE:
FOR STEER AXLE ADVANTAGE KIT ONLY
SEE PAGE 13-9 FOR DETAILS.

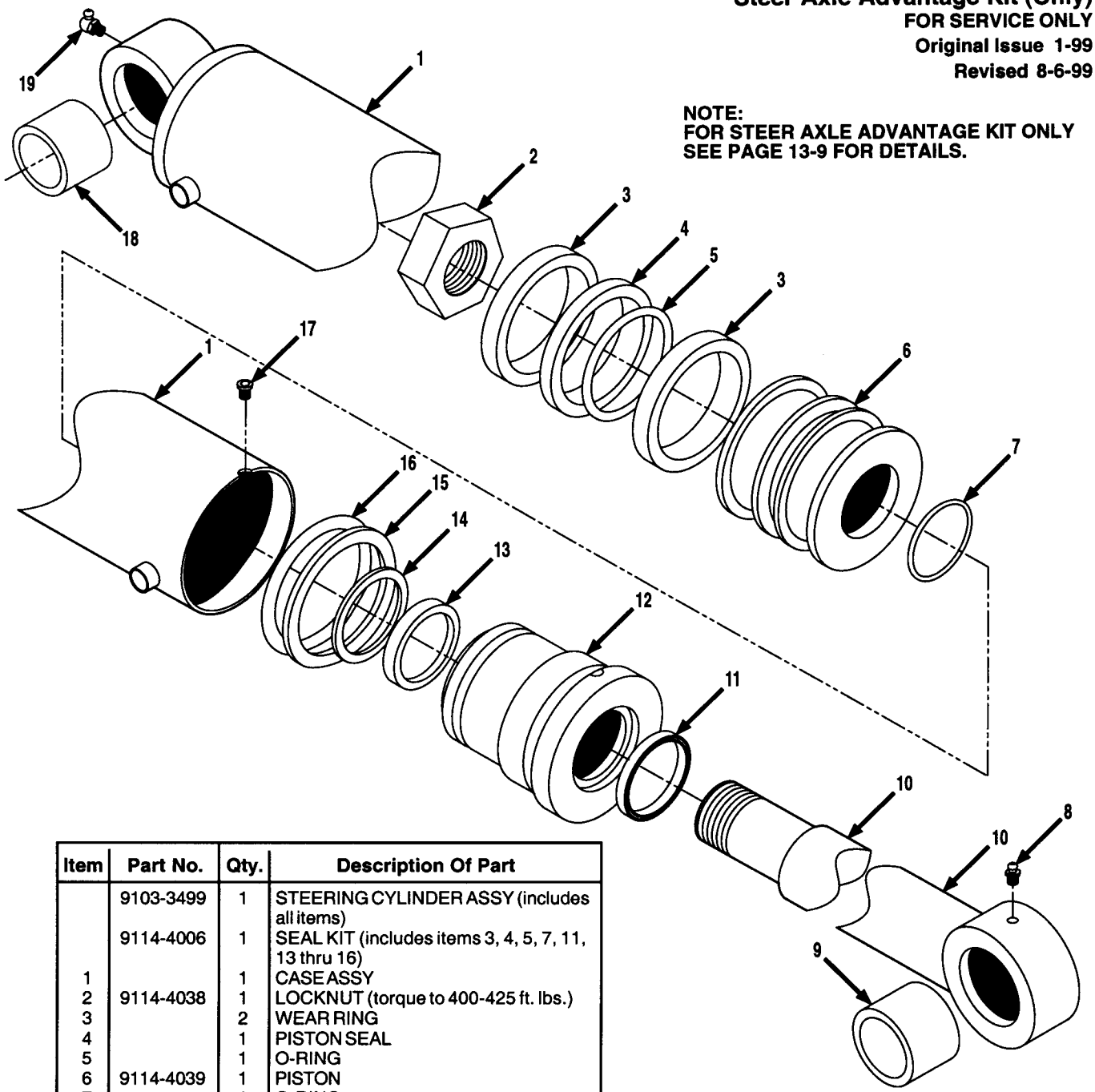

Item	Part No.	Qty.	Description Of Part
	9103-3499	1	STEERING CYLINDER ASSY (includes all items)
	9114-4006	1	SEAL KIT (includes items 3, 4, 5, 7, 11, 13 thru 16)
1		1	CASE ASSY
2	9114-4038	1	LOCKNUT (torque to 400-425 ft. lbs.)
3		2	WEAR RING
4		1	PISTON SEAL
5		1	O-RING
6	9114-4039	1	PISTON
7		1	O-RING
8	9114-4128	1	LUBE FITTING
9	9114-4042	1	BUSHING
10	9114-4041	1	ROD ASSY
11		1	WIPER
12	9114-4040	1	CYLINDER HEAD (torque to 100-400 ft. lbs.)
13		1	U-CUP
14		1	STEP SEAL
15		1	BACK-UP RING
16		1	O-RING
17	9112-4096	1	SELF TAPPING SCREW
18	9114-4267	1	BUSHING
19	9114-4125	1	LUBE FITTING
			NOTE: ONLY ITEMS WITH PART NUMBERS ARE AVAILABLE FOR SERVICE.

OPTIONAL EQUIPMENT
(9103-3127) Outrigger Cylinder

Starting Serial No. 8344001L thru 01552994

Original Issue 12-02

NOTE: THIS COMPLETE OUTRIGGER CYLINDER ASSY IS NO LONGER AVAILABLE. IF A COMPLETE OUTRIGGER CYLINDER IS NEEDED, ORDER 9114-3048.

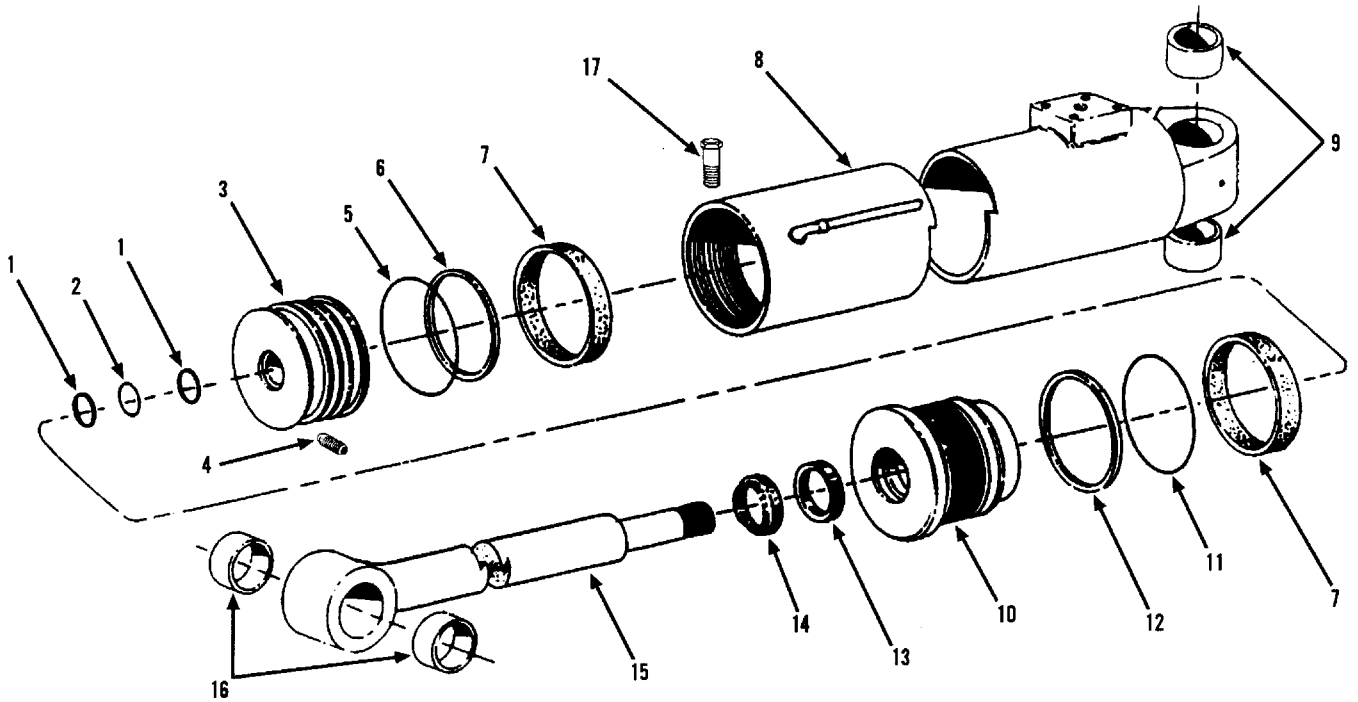

Item	Part No.	Qty.	Description Of Part
	9103-3127	2	OUTRIGGER CYLINDER ASSY, (includes all items)
	9104-4065	1	SEAL KIT, (includes items 1, 2, 5, 6, 7, 11, 12, 13 &14)
1		2	BACKUP RING
2		1	O-RING
3	9104-4066	1	PISTON ASSY, (includes items 5, 6 & 7; lubricate and torque to 1,450-1,550 ft.lbs.)
4	9104-4067	1	SET SCREW, (lubricate and torque to 12-14 ft.lbs.)
5		1	O-RING
6		1	PISTON SEAL
7		2	WEAR RING
8	9104-4068	1	BARREL ASSY, (includes item 9)
9	9104-4069	2	BUSHING
10	9104-4070	1	ROD BEARING ASSY, (includes items 11 through 14; lubricate and torque to 250-300 ft. lbs.)
11		1	O-RING
12		1	BACKUP RING
13		1	ROD SEAL
14	9002-2280	1	WIPER
15	9104-4071	1	PISTON ROD ASSY, (includes item 16)
16	9104-4072	2	BUSHING
17	9104-4073	1	HEX HD SELF-TAPPING SCREW
			NOTE: ONLY ITEMS WITH PART NUMBERS ARE AVAILABLE FOR SERVICE.

OPTIONAL EQUIPMENT
(9104-3305) Outrigger Cylinder

Starting Serial No. 01552995

Original Issue 12-02

NOTE: THIS COMPLETE OUTRIGGER CYLINDER ASSY IS NO LONGER AVAILABLE. IF A COMPLETE OUTRIGGER CYLINDER IS NEEDED, ORDER 9114-3048.

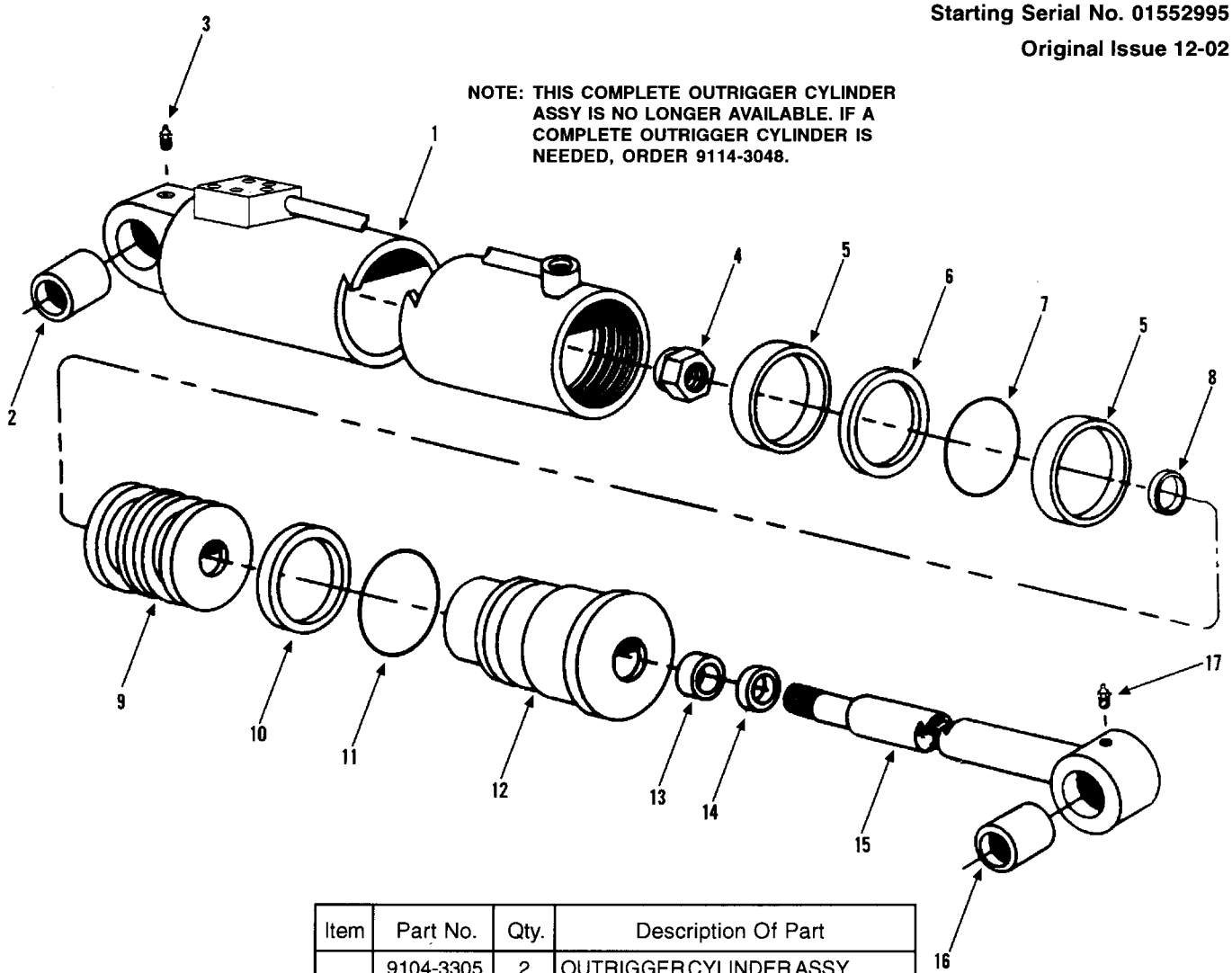

Item	Part No.	Qty.	Description Of Part
	9104-3305	2	OUTRIGGER CYLINDER ASSY, (includes all items)
	9103-4278	1	SEAL KIT, (includes items 5, 6, 7, 8, 10, 11, 13, & 14)
1	9104-4316	1	TUBE ASSY
2	9104-4371	1	BUSHING
3	8867-1018	1	LUBE FITTING, 45 DEGREES, 1/8
4	9103-4280	1	LOCK NUT, (torque to 1100 ft.lbs.)
5		2	WEAR RING
6		1	SEAL
7		1	O-RING
8		1	O-RING
9	9103-4281	1	PISTON
10		1	BACK-UP RING
11		1	O-RING
12	9103-4282	1	GLAND
13		1	SEAL
14		1	WIPER
15	9104-4317	1	ROD ASSY
16	9104-4371	1	BUSHING
17	8867-1033	1	LUBE FITTING, STRAIGHT 1/4-28
			NOTE: ONLY ITEMS WITH PART NUMBERS ARE AVAILABLE FOR SERVICE.

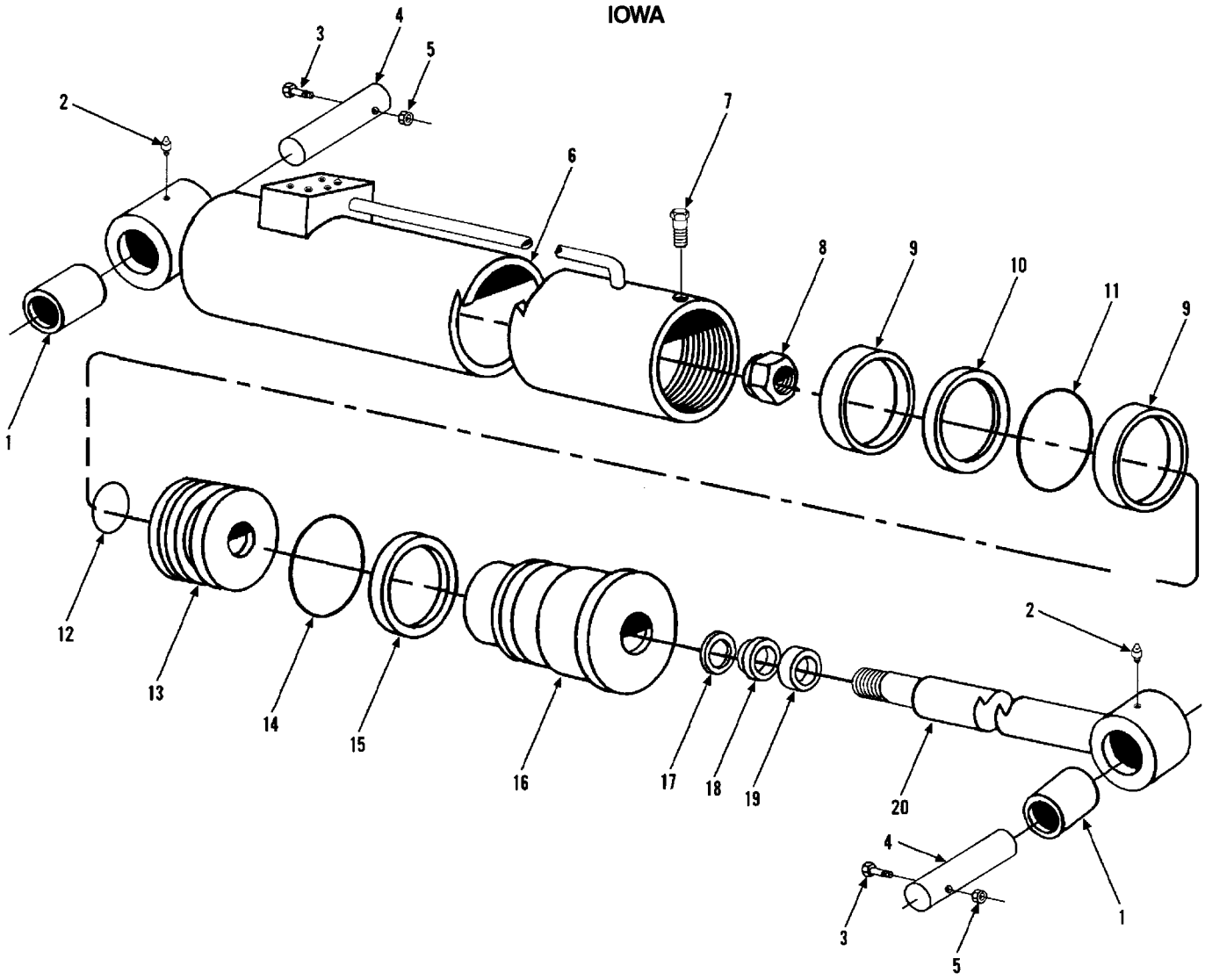

Item	Part No.	Qty.	Description Of Part
	9114-3048	2	OUTRIGGER CYLINDER, (includes items 1, 2, and 6 thru 20)
	9114-4004	1	SEAL KIT, (includes items 9, 10, 11, 12, 14, 15, 17, 18 & 19)
1	9115-4002	2	BUSHING
2	8867-1001	2	GREASE FITTING
3	8320-1073	2	HEX HD CAPSCREW, 3/8-16X4-1/2, GR5
4	9103-1141	2	SHOE PIN
5	8852-1206	2	HEX LOCKNUT, 3/8-16, (nylok)
6	9115-4003	1	CASE ASSY
7	9114-4017	1	CAPSCREW, #8-32X.375
8	9103-4153	1	LOCKNUT
9		2	WEAR RING
10		1	PISTON SEAL

Item	Part No.	Qty.	Description Of Part
11		1	O-RING
12		1	O-RING
13	9103-4139	1	PISTON
14		1	O-RING
15		1	BACK-UP RING
16	9114-4024	1	CYLINDER HEAD
17		1	STEP SEAL
18		1	U-CUP
19		1	WIPER
20	9115-4004	1	ROD ASSY
			NOTE: ONLY ITEMS WITH PART NUMBERS ARE AVAILABLE FOR SERVICE.



Corporate Office
JLG Industries, Inc.
1 JLG Drive
McConnellsburg PA. 17233-9533
USA
Phone: (717) 485-5161
Fax: (717) 485-6417

JLG Worldwide Locations

JLG Industries (Australia)
P.O. Box 5119
11 Bolwarra Road
Port Macquarie
N.S.W. 2444
Australia
Phone: (61) 2 65 811111
Fax: (61) 2 65 810122

JLG Latino Americana Ltda.
Rua Eng. Carlos Stevenson,
80-Suite 71
13092-310 Campinas-SP
Brazil
Phone: (55) 19 3295 0407
Fax: (55) 19 3295 1025

JLG Industries (UK)
Unit 4& 5
Bentley Avenue
M24 2GP Middleton
England
Phone: (44) 161 654 1000
Fax: (44) 161 654 1003

JLG EQS
Z. I. De Beaulieu
47400 Fauillet
France
Phone: (33) 553 848 584
Fax: (33) 553848588

JLG Deutschland GmbH
Max Planckstrasse 21
D-27721 Ritterhude/Ihlpohl
Bei Bremen
Germany
Phone: (49) 421 693 500
Fax: (49) 421 693 5035

JLG Equipment Services Ltd.
Rm 1107 Landmark North
39 Lung Sum Avenue
Sheung Shui N. T.
Hong Kong
Phone: (852) 2639 5783
Fax: (852) 2639 5797

JLG Industries (Italia)
Via Po. 22
20010 Pregnana Milanese - MI
Italy
Phone: (39) 029 359 5210
Fax: (39) 029 359 5845

JLG Europe B.V.
Polaris Avenue 63
2132 JH Hoofddorp
The Netherlands
Phone: (31) 235 655 665
Fax: (31) 235 572 493

JLG Polska
Ul. Krolewska
00-060 Warsawa
Poland
Phone: (48) 914 320 245
Fax: (48) 914 358 200

JLG Industries (Scotland)
Wright Business Centre
1 Lonmay Road
Queenslie,Glasgow G33 4EL
Scotland
Phone: (44) 141 781 6700
Fax: (44) 141 773 1907

Plataformas Elevadoras
JLG Iberica, S.L.
Trapadella, 2
P.I. Castellbisbal Sur
08755Castellbisbal, Barcelona
Spain
Phone: (34) 937 724 700
Fax: (34) 937 711 762

JLG Industries (Sweden)
Enkopingsvagen 150
Box 704
SE - 17527 Jarfalla
Sweden
Phone: (46) 850 659 500
Fax: (46) 850 659 534