Illustrated Parts Manual

Models
1930ES, 2030ES
2630ES, 2646ES
& 3246ES

PRIOR TO SN 0200135154
&
PRIOR TO SN 1200004293

3121246

February 1, 2018

ANSI

CE

An Oshkosh Corporation Company

REVISION LOG

NOTES:

NOTE: The ES Scissor Lifts are manufactured by JLG Industries in the following countries: USA, Belgium or China. Refer to the Serial Number Tag to identify the country of manufacture. The country of manufacture may be determined by the Serial Number. ES Scissors manufactured in the USA will have a serial number prefix of 02 (i.e. 02XXXXXXXX), ES Scissors manufactured in Belgium will have a prefix of 12 (i.e. 12XXXXXXXX) and ES Scissors manufactured in the China will have a serial number prefix of B2 (i.e. B2XXXXXXXX).

NOTE: 1930ES, 2030ES, 2630ES, 2646ES & 3246ES Global Illustrated Parts Manual P/N 3121167 has been replaced by multiple manuals. Review machine S/N and use the Global Illustrated Parts Manual for the correct serial number range:
USA Built Machines Prior to SN 0200135154 — Use manual p/n 3121246.
USA Built Machines SN 0200135154 to SN 0200152825 — Use manual p/n 3121247.
USA Built Machines SN 0200152825 to SN 0200198014 — Use manual p/n 3121248.
USA Built Machines SN 0200198014 through 0200239381 — Use manual p/n 3121275.
USA Built Machines SN 0200239381 to Present — Use manual p/n 3121681 (1930ES) or 3121683 (2646ES/3246ES).
Belgium Built Machines Prior to SN 1200004293 — Use manual p/n 3121246.
Belgium Built Machines SN 1200004293 to SN 1200008481— Use manual p/n 3121247.
Belgium Built Machines SN 1200008481 to Present — Use manual p/n 3121248.
China Built Machines SN B200000100 through B200020296 — Use manual p/n 2121275.
China Built Machines SN B200020296 to Present — Use manual p/n 3121681 (1930ES) or 3121683 (2646ES/3246ES).
Mexico Built Machines SN B200000100 to Present — Use manual p/n 3121681 (1930ES) or 3121683 (2646ES/3246ES).

MANUAL REVISION LOG:

May 31, 2008 - Original Issue of Manual (Edited to B/M 0010588 Revision 68)

August 1, 2008 - Revised Manual (Edited to B/M 0010588 Revision 69)

March 1, 2009 - Revised Manual

November 15, 2009 - Revised Manual

December 16, 2009 - Revised Manual

March 1, 2010 - Revised Manual

November 1, 2010 - Revised Manual

April 11, 2011 - Revised Manual

July 22, 2011 - Revised Manual

October 7, 2011 - Revised Manual

January 10, 2012 - Revised Manual

June 20, 2012 - Revised Manual

August 23, 2012 - Revised Manual

January 10, 2013 - Revised Manual

April 15, 2013 - Revised Manual

July 10, 2013 - Revised Manual

October 9, 2013 - Revised Manual

November 4, 2014 - Revised Manual

September 15, 2015 - Revised Manual

REVISION LOG

MANUAL REVISION LOG:

March 31, 2016 - Revised Manual

February 1, 2018 - Revised Manual

GENERAL INFORMATION

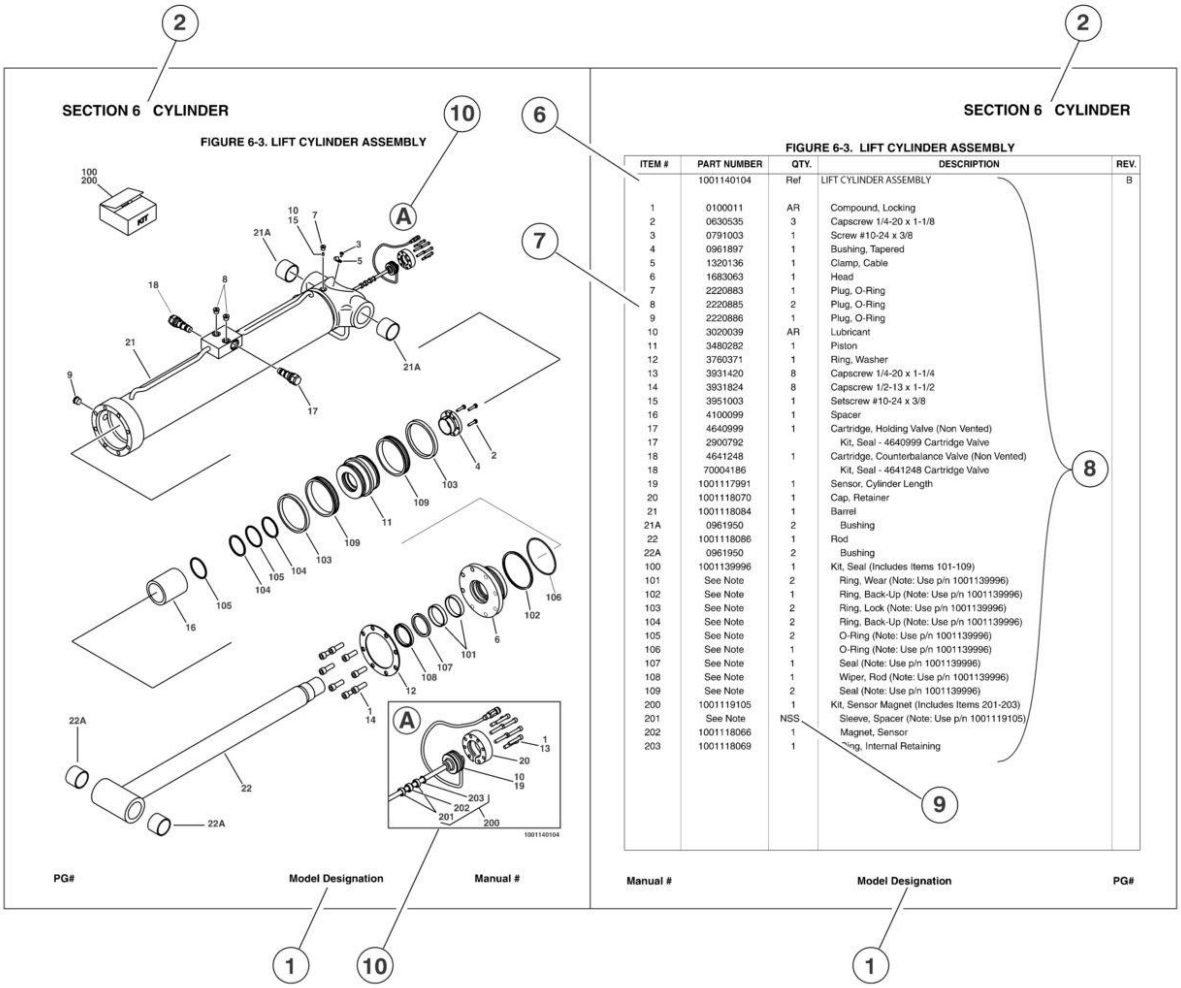

ITEM #	PART NUMBER	QTY.	DESCRIPTION	REV.
	1001140104	Ref	LIFT CYLINDER ASSEMBLY	B
1	0100011	AR	Compound, Locking	
2	0630535	3	Capscrew 1/4-20 x 1-1/8	
3	0791003	1	Screw #10-24 x 3/8	
4	0961897	1	Bushing, Tapered	
5	1320136	1	Clamp, Cable	
6	1683063	1	Head	
7	2220883	1	Plug, O-Ring	
8	2220885	2	Plug, O-Ring	
9	2220886	1	Plug, O-Ring	
10	3020039	AR	Lubricant	
11	3480282	1	Piston	
12	3760371	1	Ring, Washer	
13	3931420	8	Capscrew 1/4-20 x 1-1/4	
14	3931824	8	Capscrew 1/2-13 x 1-1/2	
15	3951003	1	Setscrew #10-24 x 3/8	
16	4100099	1	Spacer	
17	4640999	1	Cartridge, Holding Valve (Non Vented)	
17	2900792		Kit, Seal - 4640999 Cartridge Valve	
18	4641248	1	Cartridge, Counterbalance Valve (Non Vented)	
18	70004186		Kit, Seal - 4641248 Cartridge Valve	
19	1001117991	1	Sensor, Cylinder Length	
20	1001118070	1	Cap, Retainer	
21	1001118084	1	Barrel	
21A	0961950	2	Bushing	
22	1001118086	1	Rod	
22A	0961950	2	Bushing	
100	1001139996	1	Kit, Seal (Includes Items 101-109)	
101	See Note	2	Ring, Wear (Note: Use p/n 1001139996)	
102	See Note	1	Ring, Back-Up (Note: Use p/n 1001139996)	
103	See Note	2	Ring, Lock (Note: Use p/n 1001139996)	
104	See Note	2	Ring, Back-Up (Note: Use p/n 1001139996)	
105	See Note	2	O-Ring (Note: Use p/n 1001139996)	
106	See Note	1	O-Ring (Note: Use p/n 1001139996)	
107	See Note	1	Seal (Note: Use p/n 1001139996)	
108	See Note	1	Wiper, Rod (Note: Use p/n 1001139996)	
109	See Note	2	Seal (Note: Use p/n 1001139996)	
200	1001119105	1	Kit, Sensor Magnet (Includes Items 201-203)	
201	See Note	NSS	Sleeve, Spacer (Note: Use p/n 1001119105)	
202	1001118066	1	Magnet, Sensor	
203	1001118069	1	Ring, Internal Retaining	

Manual # Model Designation PG#

1) MACHINE IDENTIFICATION
Machines are identified by model and in some cases a combination of models, serial number (SN) or regional standard (i.e ANSI, CE,CSA). Components may also be identified by SN or manufacturer. common components that may be identified by these characteristics are engines and hydraulic components.

2) PARTS MANUAL ORGANIZATION
Product information in this manual is organized under section titles. Frame, Cylinder, Hydraulic and Electrical are a few examples. Each section is organized by figure and page number. The information within the Figure is then organized by item number, part number, description and corresponding illustration (s).

3) TABLE OF CONTENTS
A table of contents is found toward the beginning of the manual. Figure number, description and page number are provided for quick reference to the page containing the related information.

4) RECOMMENDED SPARE PARTS
The Recommended Spare Parts, located near the end of the manual, referance most frequently used maintenance parts.

5) PART NUMBER INDEX
A numerical index listing all part numbers and the corresponding page number(s) appears at the back of the manual.

GENERAL INFORMATION

6) NON-SERVICED PARTS
In some instances, it is necessary to display non-serviced parts, assemblies or installations. In the case of assemblies and installations there will be a Ref in the Qty column. In case of parts that are not available for service within assemblies or components, there will be a NSS (Not Sold Separately) or NLA (No Longer Available) listed in the Qty. column of the manual.

7) PARTS LIST ITEM NUMBERS
Numbers shown in the item# column correspond to numbers used in the associated illustration (s). Item numbers which are missing from the sequence in the parts list are not used on that page

8) INDENTED PARTS DESCRIPTION
An indented part description is included in the item under which it is indented.

9) ABB REVIATION AND SYMBOLS

AC ..... Alternating Current
ADE. ..... Advanced Design Electronics
ANSI ..... American National Standards Institute
AR.. ..... As Required
ASSY ..... Assembly
AUX... ..... Auxiliary
AWG ..... American Wire Gauge
B/M.. ..... Bill of Material
CE.. ..... European Conformity
CCW ..... Counter Clockwise
cm. ..... Centimeter
CW ..... Clockwise
CSA. ..... Canadian Standards Association
CYL... ..... Cylinder
DIA. ..... Diameter
DC ..... Direct Current
EMS ..... Emergency Stop
ENG ..... Engine
FT(ft).. ..... Feet
GA(Ga).. ..... Gauge
HYD ..... Hydraulic
Hz.. ..... Hertz
ID.. ..... Inside Diameter
in... ..... inches
ISO ..... International Organization for Standards
JIC ..... Joint Industry Council
KG ..... Kilogram
L.. ..... Liter
LB ..... Pounds
LCD ..... Liquid Crystal Display
LED ..... Light Emitting Diodes
LH... ..... Left Hand
LSS ..... Load Sensing System
M(m)... ..... Metric/Meter
MM (mm) ..... Milimeter
mA. ..... Miliamps
NLA ..... No Longer Available
NPT ..... National Pipe Threads
NSS ..... Not Sold Separately
OD.. ..... Outside Diameter
ORB ..... O-Ring Boss
ORFS ..... O-Ring Face Seal
OZ (oz). ..... Ounces
PG ..... Page
P/N. ..... Part Number
qt. ..... Quarts
QTY. ..... Quantity
REF ..... Reference
REV ..... Revision Level
RH... ..... Right Hand
SAE ..... Society of Automotive Engineers
SN.. ..... Serial Number
SPEC(S) ..... Specifications
T/T. ..... Turntable
UGM ..... Universal Ground Module
V. ..... Volts
W... ..... Watts
#... ..... Number

10) ILLUSTRATION REFERANCE LETTERS
When necessary, illustrations may contain referance letters that are intended to track information (i. e. hoses, harnesses) from one point to another or to track visual enlargement of components to show details that may be located in another area on the illustration.

Note: Due to continuous product improvements, JLG Industries, Inc. reserves the right to make specification changes without prior notification. Contact JLG Industries, Inc. for updated information.

TABLE OF CONTENTS

SECTION 1 - FRAME 9

FIGURE 1-1. STEERING, DRIVE AND REAR AXLE INSTALLATIONS 10
FIGURE 1-2. WHEEL DRIVE ASSEMBLY (Prior to SN 0200118041, Prior to SN 1200001487) 14
FIGURE 1-3. WHEEL DRIVE ASSEMBLY (SN 0200118041 through 0200135154, SN 1200001487 through 1200004293) 18
FIGURE 1-4. FRAME MOUNTED COMPONENTS 22
FIGURE 1-5. POTHOLE PROTECTION INSTALLATION (1930ES/2030ES/2630ES) 26
FIGURE 1-6. POTHOLE PROTECTION INSTALLATION (2646ES/3246ES) 28
FIGURE 1-7. BATTERY CHARGER ASSEMBLY AND INSTALLATION (MAC CHARGER WITH BREAKERS ON SIDE) 30
FIGURE 1-8. BATTERY CHARGER ASSEMBLY AND INSTALLATION (MAC CHARGER WITH BREAKERS ON END) 32
FIGURE 1-9. BATTERY CHARGER WITH INVERTER ASSEMBLY AND INSTALLATION (OPTIONAL ON ANSI SPEC MACHINES) 36
FIGURE 1-10. LADDERS, BEACON LIGHT AND ROTARY SENSOR COVER INSTALLATIONS 38

SECTION 2 - GROUND COMPONENTS 41

FIGURE 2-1. BATTERIES AND COVERS INSTALLATION (Prior to SN 0200128413, Prior to SN 1200002974) 42
FIGURE 2-2. BATTERIES AND COVERS INSTALLATION (SN 0200128413 through 0200135154, SN 1200002974 through 1200004293) 46
FIGURE 2-3. GROUND CONTROL ASSEMBLY AND INSTALLATION (Prior to SN 0200117805, Prior to SN 1200001367) 50
FIGURE 2-4. GROUND CONTROL ASSEMBLY AND INSTALLATION (SN 0200117805 through 0200135154, SN 1200001367 through 1200004293) 54
FIGURE 2-5. BRAKE DISCONNECT/RELEASE AND MDI (MULTIFUNCTION DIGITAL INDICATOR) GAUGE INSTALLATIONS (OPTIONAL) 58

SECTION 3 - SCISSORS ARMS 61

FIGURE 3-1. SCISSOR ARMS INSTALLATION - 1930ES 62
FIGURE 3-2. SCISSOR ARMS INSTALLATION - 2030ES 66
FIGURE 3-3. SCISSOR ARMS INSTALLATION - 2630ES 68
FIGURE 3-4. SCISSOR ARMS INSTALLATION - 2646ES/3246ES 72

SECTION 4 - PLATFORM 75

FIGURE 4-1. PLATFORM INSTALLATION 76
FIGURE 4-2. RAIL (FIXED) INSTALLATION - 1930ES 80
FIGURE 4-3. RAIL (FOLD-DOWN) INSTALLATION - 1930ES 84
FIGURE 4-4. RAIL INSTALLATION - 2030ES/2630ES 88
FIGURE 4-5. RAIL INSTALLATION - 2646ES/3246ES 92
FIGURE 4-6. PLATFORM CONSOLE BOX INSTALLATION 96
FIGURE 4-7. DRIVE/STEER CONTROLLER ASSEMBLY (ORIGINAL EQUIPMENT) 100
FIGURE 4-8. DRIVE/STEER CONTROLLER ASSEMBLY (SERVICE REPLACEMENT) 102
FIGURE 4-9. WORKSTATION INSTALLATION 104
FIGURE 4-10. PACKAGE INSTALLATION (1930ES/2030ES/2630ES) 106
FIGURE 4-11. PACKAGE INSTALLATION (2646ES/3246ES) 108
FIGURE 4-12. PANEL INSTALLATIONS 112
FIGURE 4-13. QUIK WELDER INSTALLATION (Prior to SN 0200123646, Prior to SN 1200002324) 114
FIGURE 4-14. QUIK WELDER INSTALLATION (SN 0200123646 through 0200135154, SN 1200002324 through 1200004293) 116

SECTION 5 - CYLINDER 119

TABLE OF CONTENTS

FIGURE 5-1. LIFT CYLINDER ASSEMBLY 120
FIGURE 5-2. STEER CYLINDER ASSEMBLY 126

SECTION 6 - HYDRAULIC 129

FIGURE 6-1. HYDRAULIC DIAGRAM 130

SECTION 7 - ELECTRICAL 133

FIGURE 7-1. ELECTRICAL SCHEMATIC 134
FIGURE 7-2. ELECTRICAL COMPONENTS INSTALLATION 136

SECTION 8 - DECALS 147

FIGURE 8-1. DECAL INSTALLATION (ANSI SPEC) 148
FIGURE 8-2. DECALS INSTALLATIONS (ANSI EXPORT SPEC) 154
FIGURE 8-3. DECAL INSTALLATION (AUSTRALIAN AND CE SPECS) 160

SECTION 9 - RECOMMENDED SERVICE PARTS STOCK 165

FIGURE 9-1. MODEL ES STANDARD PARTS 166
FIGURE 9-2. MODEL ES VARIABLE PARTS 168
FIGURE 9-3. MODEL ES MAINTENANCE KITS 170

SECTION 10 - SPECIAL OPTIONS 171

FIGURE 10-1. SPECIAL OPTIONS LIST 172

PART NUMBER INDEX 175

SECTION 1 - FRAME

FIGURE 1-1. STEERING, DRIVE AND REAR AXLE INSTALLATIONS

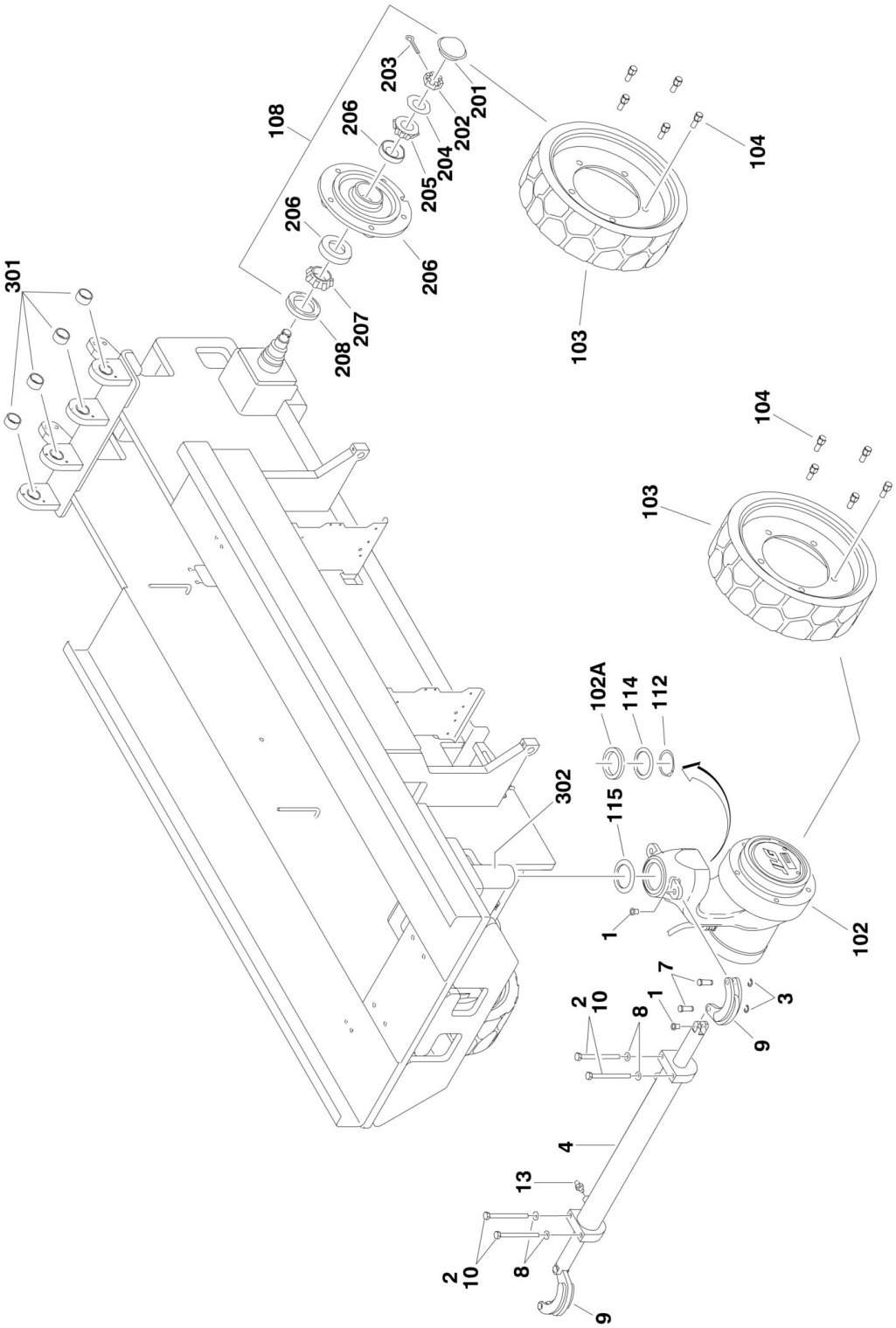

FIGURE 1-1. STEERING, DRIVE AND REAR AXLE INSTALLATIONS

ITEM	PART NUMBER	QTY	DESCRIPTION	REV
		Ref	**STEERING INSTALLATION**	
	0272371	Ref	**Steering Installation 1930ES**	F
	0273227	Ref	**Steering Installation 2030ES/2630ES**	C
	0272372	Ref	**Steering Installation 2646ES/3246ES**	G
1	0440259	2	Bearing, Flanged	
2		Ref	Bolt M10 Options:	
2	0701016	4	Bolt 40mm Length	
2	0701020	4	Bolt 60mm Length	
3	1380153	4	E-Clip	
4		Ref	Steer Cylinder Assembly (See CYLINDER SECTION for Breakdown):	
4	1684237	1	Steer Cylinder Assembly 1930ES/2030ES/2630ES	
4	1684263	1	Steer Cylinder Assembly 2646ES/3246ES	
7	3423037	4	Pin, Clevis	
8	4812000	4	Flatwasher M10	
9	4846757	2	Lug, Steer	
10	0100011	AR	Compound, Locking	
11	1320318	2	P-Clamp (Not Shown - Used with Steer Hoses) (USA Built Machines) **(Prior to SN 0200124799)**	
11	1320318	2	P-Clamp (Not Shown - Used with Steer Hoses) (Belgium Built Machines) **(Prior to SN 1200002594)**	
12	1380158	2	Clip (Not Shown - Used with Item 11) (USA Built Machines) **(Prior to SN 0200124799)**	
12	1380158	2	Clip (Not Shown - Used with Item 11) (Belgium Built Machines) **(Prior to SN 1200002594)**	
13	2110404	2	Fitting, Straight	
		Ref	**DRIVE INSTALLATION**	
	0272710	Ref	**Drive Installation 1930ES**	L
	0274224	Ref	**Drive Installation 1930ES (UL SPEC)**	C
	0272711	Ref	**Drive Installation 2030ES/2630ES**	L
	0274225	Ref	**Drive Installation 2030ES/2630ES (UL SPEC)**	C
	0273008	Ref	**Drive Installation 2646ES/3246ES**	L
	0274226	Ref	**Drive Installation 2646ES/3246ES (UL SPEC)**	C
102		Ref	Wheel Drive Assembly Options:	
102		Ref	**Wheel Drive Assembly Options 1930ES**	
102	0272305	NLA	Wheel Drive Assembly USA Built Machines (See WHEEL DRIVE ASSEMBLY for Breakdown) (Note: To replace the complete unit both right and left Drive Assemblies must be upgraded at the same time. Order qty 2 of p/n 2915236) **(Prior to SN 0200118041)**	
102	0272305	NLA	Wheel Drive Assembly Belgium Built Machines (See WHEEL DRIVE ASSEMBLY for Breakdown) (Note: To replace the complete unit both right and left Drive Assemblies must be upgraded at the same time. Order qty 2 of p/n 2915236) **(Prior to SN 1200001487)**	
102	3160306	NLA	Wheel Drive Assembly USA Built Machines (See WHEEL DRIVE ASSEMBLY for Breakdown) (Use p/n 2915236) **(SN 0200118041 through 0200135154)**	
102	3160306	NLA	Wheel Drive Assembly Belgium Built Machines (See WHEEL DRIVE ASSEMBLY for Breakdown) (Use p/n 2915236) **(SN 1200001487 through 1200004293)**	
102		Ref	**Wheel Drive Assembly 2030ES/2630ES/2646ES/3246ES**	

ITEM	PART NUMBER	QTY	DESCRIPTION	REV
102	0272306	NLA	Wheel Drive Assembly USA Built Machines (See WHEEL DRIVE ASSEMBLY for Breakdown) (Note: To replace the complete unit both right and left Drive Assemblies must be upgraded at the same time. Order qty 2 of p/n 1001100975) **(Prior to SN 0200118041)**	
102	0272306	NLA	Wheel Drive Assembly Belgium Built Machines (See WHEEL DRIVE ASSEMBLY for Breakdown) (Note: To replace the complete unit both right and left Drive Assemblies must be upgraded at the same time. Order qty 2 of p/n 1001100975) **(Prior to SN 1200001487)**	
102	3160307	NLA	Wheel Drive Assembly USA Built Machines (See WHEEL DRIVE ASSEMBLY for Breakdown) (Use p/n 1001100975) **(SN 0200118041 through 0200135154)**	
102	3160307	NLA	Wheel Drive Assembly USA Built Machines (See WHEEL DRIVE ASSEMBLY for Breakdown) (Use p/n 1001100975) **(SN 1200001487 through 1200004293)**	
102A	3577112	2	Plate, Spacer (Used only on Machines with Kit p/n 2915236 installed)	
103		Ref	Tire and Wheel Assembly	
		Ref	**Note: Must replace Tire and Wheel Assemblies in pairs per axle.**	
103	4520326	NLA	Tire and Wheel Assembly - 1930ES (Use Kit p/n 2915012)	
103	4520565	NLA	Tire and Wheel Assembly - 1930ES (Use Kit p/n 2915012)	
103	4520327	NLA	Tire and Wheel Assembly - 2030ES/2630ES/2646ES/3246ES (Use Kit p/n 2915013)	
103	4520676	NLA	Tire and Wheel Assembly - 2030ES/2630ES/2646ES/3246ES (Use Kit p/n 2915013)	
104		Ref	Bolt, Wheel Options:	
104	0630579	20	Bolt, Wheel 36mm Length	
104	0630580	20	Bolt, Wheel 22mm Length	
108	2780266	2	Hub Assembly (See Items 201-208 for Breakdown)	
112	3760463	2	Ring, Retaining	
114	4740523	4	Washer, Spindle Retaining	
115	4740524	2	Thrustwasher M60	
	2780266	Ref	**HUB ASSEMBLY**	B
		Ref	**Note: Qtys shown for 1 Assembly. Two Assemblies required per machine.**	
201	1001102354	1	Cap, Dust (was p/n 7012524)	
202	3300423	1	Nut, Slotted (was p/n 7010641)	
203	3450406	1	Pin, Cotter 2in x 3/16in (was p/n 7010642)	
204	4740468	1	Washer (was p/n 7019697)	
205	1001102351	1	Bearing, Cone - Outer (was p/n 7026185)	
206	See Note	NSS	Hub (Note: Purchase Complete Hub p/n 2780266)	
207	1001102353	1	Bearing, Cone - Inner (was p/n 7026183)	
208	1001102349	1	Seal (was p/n 7026184)	
		Ref	**FRAME WELDMENTS**	
301		Ref	Bushing Options:	
301	0440264	2	Bushing 1930ES	
301	0440265	4	Bushing 2030ES/2630ES/2646ES/3246ES	
302		Ref	Kingpin Rework Instruction Options (Provides rework procedure for damaged kingpins):	
302	3128601	AR	Kingpin Rework Instruction 1930ES/2030ES/2630ES	
302	3128703	AR	Kingpin Rework Instruction 2646ES/3246ES	

FIGURE 1-2. WHEEL DRIVE ASSEMBLY (Prior to SN 0200118041, Prior to SN 1200001487)

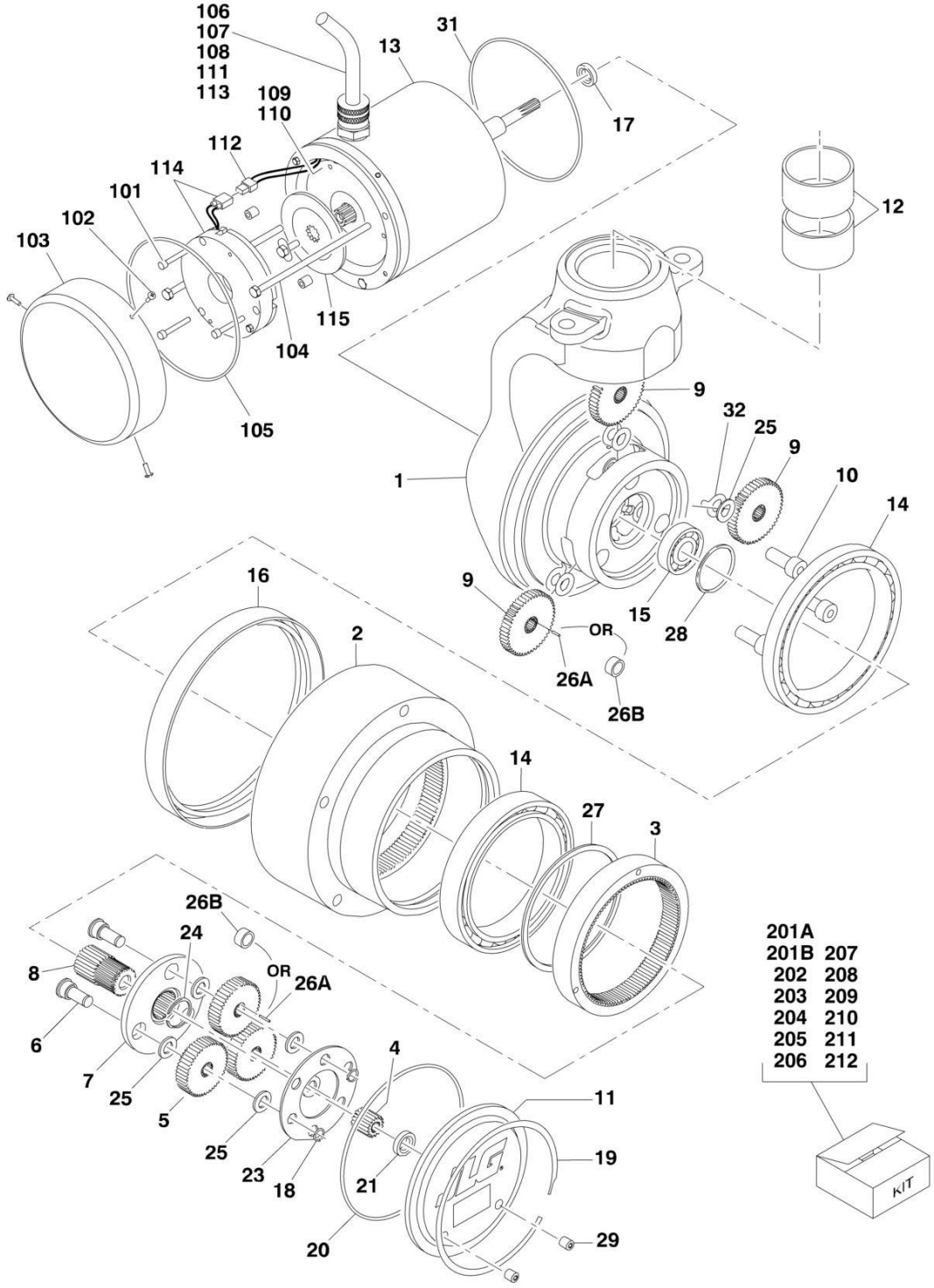

FIGURE 1-2. WHEEL DRIVE ASSEMBLY (Prior to SN 0200118041, Prior to SN 1200001487)

ITEM	PART NUMBER	QTY	DESCRIPTION	REV
		Ref	**WHEEL DRIVE ASSEMBLY (PEERLESS)**	
	0272305	Ref	**Wheel Drive Assembly 1930ES**	F
	0272306	Ref	**Wheel Drive Assembly 2030ES/2630ES/2646ES/3246ES**	F
		Ref	**HUB ASSEMBLY**	
1		Ref	Spindle	
1	7024754	NLA	Spindle 1930ES (Purchase Complete Assembly)	
1	7024761	NLA	Spindle 2030ES/2630ES/2646ES/3246ES (Purchase Complete Assembly)	
2	See Note	NSS	Hub (Note: Use Item 210)	
3	See Note	NSS	Ring, Input (Note: Use Item 211)	
4	See Note	NSS	Gear, Input Sun (Note: Use Item 204)	
5	See Note	NSS	Gear, Input Planet (Note: Use Item 204)	
6	See Note	NSS	Pin, Planet Gear (Note: Use Item 204)	
7	See Note	NSS	Carrier (Note: Use Item 204)	
8	See Note	NSS	Gear, Output Sun (Note: Use Item 204)	
9	See Note	NSS	Gear, Output Planet (Note: Use Item 205)	
10	See Note	NSS	Pin, Output Planet (Note: Use Item 205)	
11	See Note	NSS	Cover (Note: Use Item 202)	
12	7024757	1	Bushing Kit, Kingpin (Includes 2 Bushings)	
13	See Note	NSS	Motor, Electric (Note: Use Item 201A or 201B)	
14	See Note	NSS	Bearing, Main (Note: Use Item 203, 205, 210 or 211)	
15	See Note	NSS	Bearing, Shaft (Note: Use Item 205)	
16	70001739	1	Seal, Lip	
17	7024786	1	Seal, Lip	
18	See Note	NSS	Ring, Retaining (Note: Use Item 204)	
19	See Note	NSS	Ring, Retaining (Note: Use Item 202)	
20	See Note	1	O-Ring (Note: Use Item 202, 203, 204, 205, 210 or 211)	
21	See Note	NSS	Thrustwasher (Note: Use Item 202)	
23	See Note	NSS	Plate, Thrust (Note: Use Item 204)	
24	See Note	NSS	Ring, Retaining (Note: Use Item 204)	
25	See Note	NSS	Thrustwasher (Note: Use Item 204 or 205)	
26	See Note	NSS	Bearing/Bushing Options: (Note: Use Item 204 or 205)	
26A	See Note	NSS	Bearing, Needle (Note: Use Item 204 or 205)	
26B	See Note	NSS	Bushing (Note: Use Item 204 or 205)	
27	See Note	NSS	Ring, Retaining (Note: Use Item 205, 210 or 211)	
28	See Note	NSS	Ring, Retaining (Note: Use Item 205)	
29	See Note	NSS	Plug (Note: Use Item 202)	
31	See Note	NSS	O-Ring (Note: Use Item 201A, 201B, 208 or 209)	
32	See Note	NSS	Washer, Tanged (Note: Use Item 205)	
		Ref	**BRAKE AND MOTOR COMPONENTS**	
101	See Note	NSS	Bolt (Note: Use Item 201A, 201B or 212)	
102	See Note	NSS	Screw (Note: Use Item 201A, 201B or 206)	
103	See Note	NSS	Cover, Brake (Note: Use Item 201A, 201B or 206)	
104	See Note	NSS	Bolt (Note: Not Available for Purchase)	
105	See Note	NSS	O-Ring (Note: Use Item 201A, 201B, 206, 208, 209 or 212)	
106	See Note	NSS	Cable, Electrical (Note: Use Item 201A, 201B or 207)	
107	See Note	NSS	Tubing, Shrink (Note: Use Item 201A, 201B or 207)	
108	See Note	NSS	Splice, Electrical (Note: Use Item 201A, 201B or 207)	
109	See Note	NSS	Brush, Motor (Note: Use Item 201A, 201B or 208)	
110	See Note	NSS	Bearing, Ball (Note: Use Item 201A, 201B or 209)	

ITEM	PART NUMBER	QTY	DESCRIPTION	REV
111	See Note	NSS	Splice, Electrical (Note: Use Item 201A, 201B or 207)	
112	See Note	NSS	Connector (To Brake) (Note: Use Item 201A, 201B or 207)	
113	See Note	NSS	Tubing, Shrink (Note: Use Item 201A, 201B or 207)	
114	See Note	NSS	Brake Assembly (Note: Use Item 201A, 201B or 212)	
115	7024785	1	Disc, Friction	
		Ref	**KIT OPTIONS**	
201		Ref	Motor Kit Options (Includes Items 13, 17, 31, 101-115 and New Software):	
		Ref	**Note: Both right and left motors must be replaced at the same time.**	
		Ref	**Note: These kits upgrade only the motors from Peerless Motors to Advanced DC Motors used in the next figure. Kits include two motors.**	
		Ref	**Note: If these Motor Kits have previously been installed on machine refer to next figure for replacement parts.**	
201A	2915042	1	Motor Kit 1930ES Motor Kit (was Motor p/n 7024746)	
201B	2915043	1	Motor Kit 2030ES/2630ES/2646ES/3246ES Motor Kit (was Motor p/n 7024760)	
202	7024747	1	Cover Kit (Includes Items 11, 19, 20, 21 & 29)	
203	7024748	1	Main Seal Kit (Includes Qty 1 each of Items 14, 16 & 20)	
204	7024749	1	Input Carrier Kit (Includes Items 4-8, 18, 20 & 23-26)	
205	7024750	1	Output Planet Kit (Includes Items 9, 10, 15, 20, 25-28, 32 & Qty 1 of Item 14)	
206	7024751	1	Brake Cover Kit (Includes 102,103 & 105)	
207	See Note	NLA	Electrical Cable Kit Options (Includes Items 106-108 & 111-113) (Were p/n's 7024752 & 7024768):	
		Ref	**Note: Electrical Cable Kits are no longer available. Purchase Item 201A or 201B.**	
208	7024753	1	Motor Brush Kit (Includes Items 31, 105 & 109)	
209	7024755	1	Motor Bearing Kit (Includes Items 31, 105 & 110)	
210	7024756	1	Hub Kit (Includes Items 2, 16, 20, 27 & Qty 1 of Item 14)	
211	7024758	1	Input Ring Kit (Includes Items 3, 20, 27 & Qty 1 of Item 14)	
212	7024759	1	Brake Kit (Includes Items 101, 105, 114 & 115)	

FIGURE 1-3. WHEEL DRIVE ASSEMBLY (SN 0200118041 through 0200135154, SN 1200001487 through 1200004293)

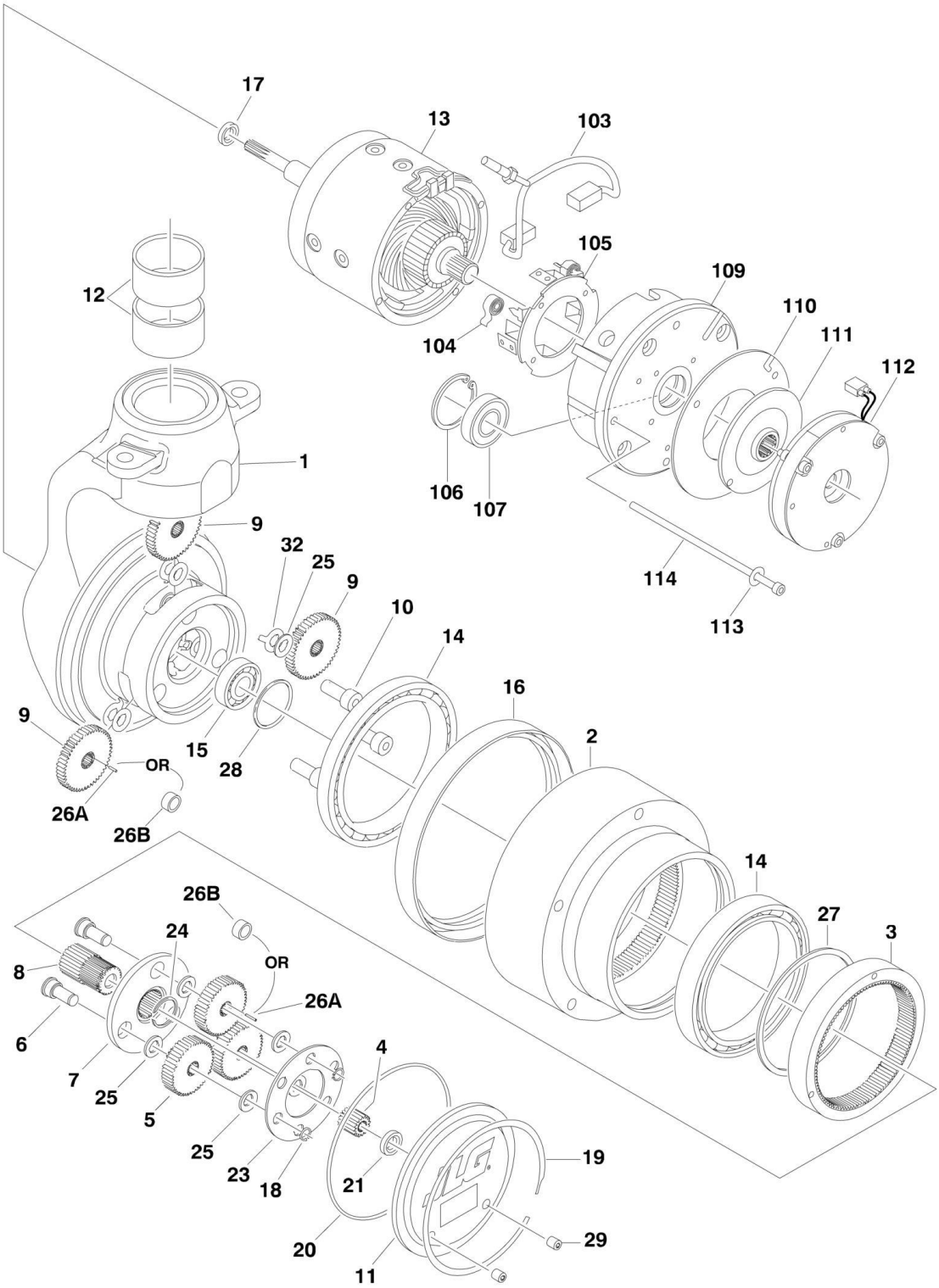

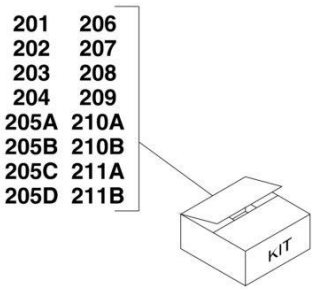

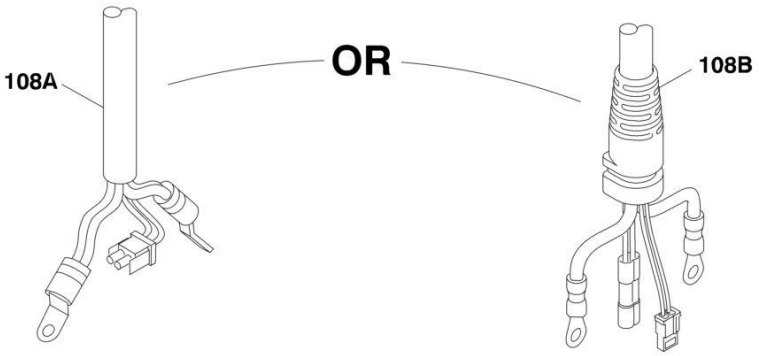

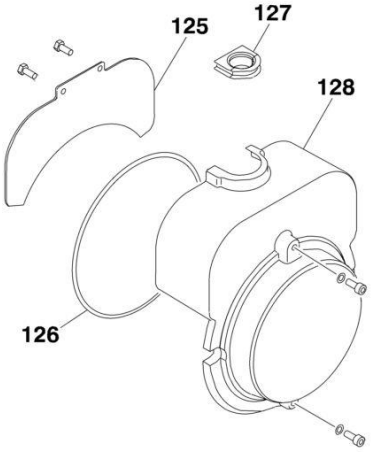

STYLE "A"

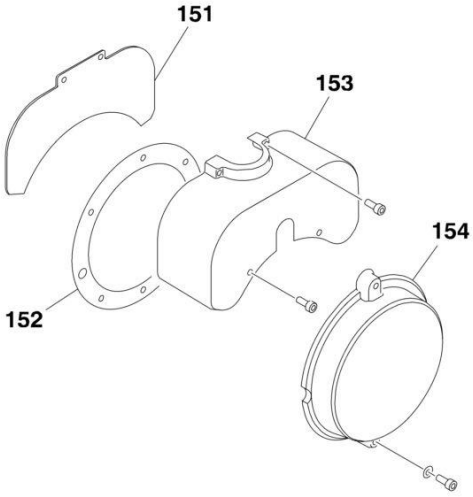

STYLE "B"

FIGURE 1-3. WHEEL DRIVE ASSEMBLY (SN 0200118041 through 0200135154, SN 1200001487 through 1200004293)

ITEM	PART NUMBER	QTY	DESCRIPTION	REV
		Ref	**WHEEL DRIVE ASSEMBLY (ADVANCED)**	
	3160306	Ref	**Wheel Drive Assembly 1930ES**	E
	3160307	Ref	**Wheel Drive Assembly 2030ES/2630ES/2646ES/3246ES**	E
		Ref	**Note: Due to service updates, drive motors may use any of the various parts listed below. Visual identification will be required.**	
		Ref	**HUB ASSEMBLY**	
1	See Note	NSS	Spindle (Note: Purchase Complete Assembly)	
2	See Note	NSS	Hub (Note: Use Item 206)	
3	See Note	NSS	Ring, Input (Note: Use Item 204)	
4	See Note	NSS	Gear, Input Sun (Note: Use Item 203)	
5	See Note	NSS	Gear, Input Planet (Note: Use Item 203)	
6	See Note	NSS	Pin, Planet Gear (Note: Use Item 203)	
7	See Note	NSS	Carrier (Note: Use Item 203)	
8	See Note	NSS	Gear, Output Sun (Note: Use Item 203)	
9	See Note	NSS	Gear, Output Planet (Note: Use Item 207)	
10	See Note	NSS	Pin, Output Planet (Note: Use Item 207)	
11	See Note	NSS	Cover (Note: Use Item 201)	
12	7024757	1	Bushing Kit, Kingpin (Includes 2 Bushings)	
13	See Note	NSS	Motor, Electric (Note: Use Item 205A, 205B, 205C or 205D)	
14	See Note	NSS	Bearing, Main (Note: Use Item 202, 204, 206 or 207)	
15	See Note	NSS	Bearing, Shaft (Note: Use Item 207)	
16	70001739	1	Seal, Lip	
17	7024786	1	Seal, Lip	
18	See Note	NSS	Ring, Retaining (Note: Use Item 203)	
19	See Note	NSS	Ring, Retaining (Note: Use Item 201)	
20	70000191	1	O-Ring	
21	See Note	NSS	Thrustwasher (Note: Use Item 201)	
23	See Note	NSS	Plate, Thrust (Note: Use Item 203)	
24	See Note	NSS	Ring, Retaining (Note: Use Item 203)	
25	See Note	NSS	Thrustwasher (Note: Use Item 203 or 207)	
26	See Note	NSS	Bearing/Bushing Options (Note: Use Item 203 or 207)	
26A	See Note	NSS	Bearing, Needle (Note: Use Item 203 or 207)	
26B	See Note	NSS	Bushing (Note: Use Item 203 or 207)	
27	See Note	NSS	Ring, Retaining (Note: Use Item 204, 206 or 207)	
28	See Note	NSS	Ring, Retaining (Note: Use Item 207)	
29	See Note	NSS	Plug (Note: Use Item 201)	
32	See Note	NSS	Washer, Tanged (Note: Use Item 207)	
		Ref	**BRAKE AND MOTOR COMPONENTS**	
103	See Note	NSS	Brush and Terminal Assembly (Note: Use Item 208)	
104	70000790	2	Spring, Brush	
105	70000791	1	Box, Brush	
106	See Note	NSS	Ring, Retaining (Note: Use Item 208)	
107	See Note	NSS	Bearing (Note: Use Item 208)	
108		Ref	Harness, Electrical Cable Options:	
108A	1001099628	1	Harness, Electrical Cable 1930ES (was p/n 7024770)	
108A	1001099676	1	Harness, Electrical Cable 2030ES/2630ES/2646ES/3246ES (was p/n 7024770 & 7024775)	
108B	1001091502	1	Harness, Electrical Cable 1930ES	

ITEM	PART NUMBER	QTY	DESCRIPTION	REV
108B	1001091843	1	Harness, Electrical Cable 2030ES/2630ES/2646ES/3246ES (Use p/n 1001134012)	
109	70000792	1	Commutator	
110	See Note	NSS	Disc, Reaction (Note: Use Item 209)	
111	7024785	1	Disc, Friction	
112	See Note	NSS	Brake, Assembly (Note: Use Item 209)	
113	See Note	NSS	Flatwasher (Note: Use Item 210A or 210B)	
114	See Note	NSS	Bolt (Note: Use Item 210A or 210B)	
		Ref	**Style "A" Brake Cover**	
125	See Note	NSS	Plate, Cover (Note: Use Item 211A or 211B)	
126	See Note	NSS	O-Ring (Note: Use Item 210A, 210B, 211A or 211B)	
127	70000383	1	Connector, Strain Relief	
128	See Note	NSS	Cover (Note: Use Item 211A or 211B)	
		Ref	**Style "B" Brake Cover**	
151	See Note	NSS	Plate, Cover (Note: Use Item 211A or 211B)	
152	70001949	1	Gasket, Cover	
153	See Note	NSS	Cover, Top (Note: Use Item 211A or 211B)	
154	See Note	NSS	Cover, End (Note: Use Item 211A or 211B)	
		Ref	**KIT OPTIONS**	
201	7024747	1	Cover Kit (Includes Items 11, 19, 20, 21 & 29)	
202	7024748	1	Main Seal Kit (Includes Qty 1 of Items 14, 16 & 20)	
203	7024749	1	Input Carrier Kit (Includes Items 4-8, 18, 20 & 23-26)	
204	7024758	1	Input Ring Kit (Includes Items 3, 20, 27 & Qty 1 of Item 14)	
205		Ref	Motor Kit Options (Includes Items 13, 17, 103-114 & 151-154):	
205		Ref	Motors with Item #108A Style Electrical Cable	
205A	1001100819	1	Motor Kit 1930ES (was p/n 7024774)	
205B	1001100820	1	Motor Kit 2030ES/2630ES/2646ES/3246ES (was p/n 7024777)	
205		Ref	Motors with Item #108B Style Electrical Cable	
205C	70001263	1	Motor Kit 1930ES	
205D	70001345	1	Motor Kit 2030ES/2630ES/2646ES/3246ES	
206	7024756	1	Hub Kit (Includes Items 2, 16, 20, 27 & Qty 1 of Item 14)	
207	7024750	1	Output Planet Kit (Includes Items 9, 10, 15, 20, 25-28, 32 & Qty 1 of Item 14)	
208	7024771	1	Motor Brush and Bearing Kit (Includes Items 103, 106 & 107)	
208	70007781	1	Brush Kit (Includes Brushese Only)	
209	7024772	1	Brake Kit (Includes Items 110, 111 & 112)	
210		Ref	Motor Hardware Kit (Includes Items 113 & 114)	
210A	7024773	1	Motor Hardware Kit 1930ES	
210B	7024776	1	Motor Hardware Kit 2030ES/2630ES/2646ES/3246ES	
211		Ref	Brake Cover Kit Options:	
211A	7024787	1	Style "A" (Includes Items 125-128)	
211B	70001265	1	Style "B" (Includes Items 151-154)	

FIGURE 1-4. FRAME MOUNTED COMPONENTS

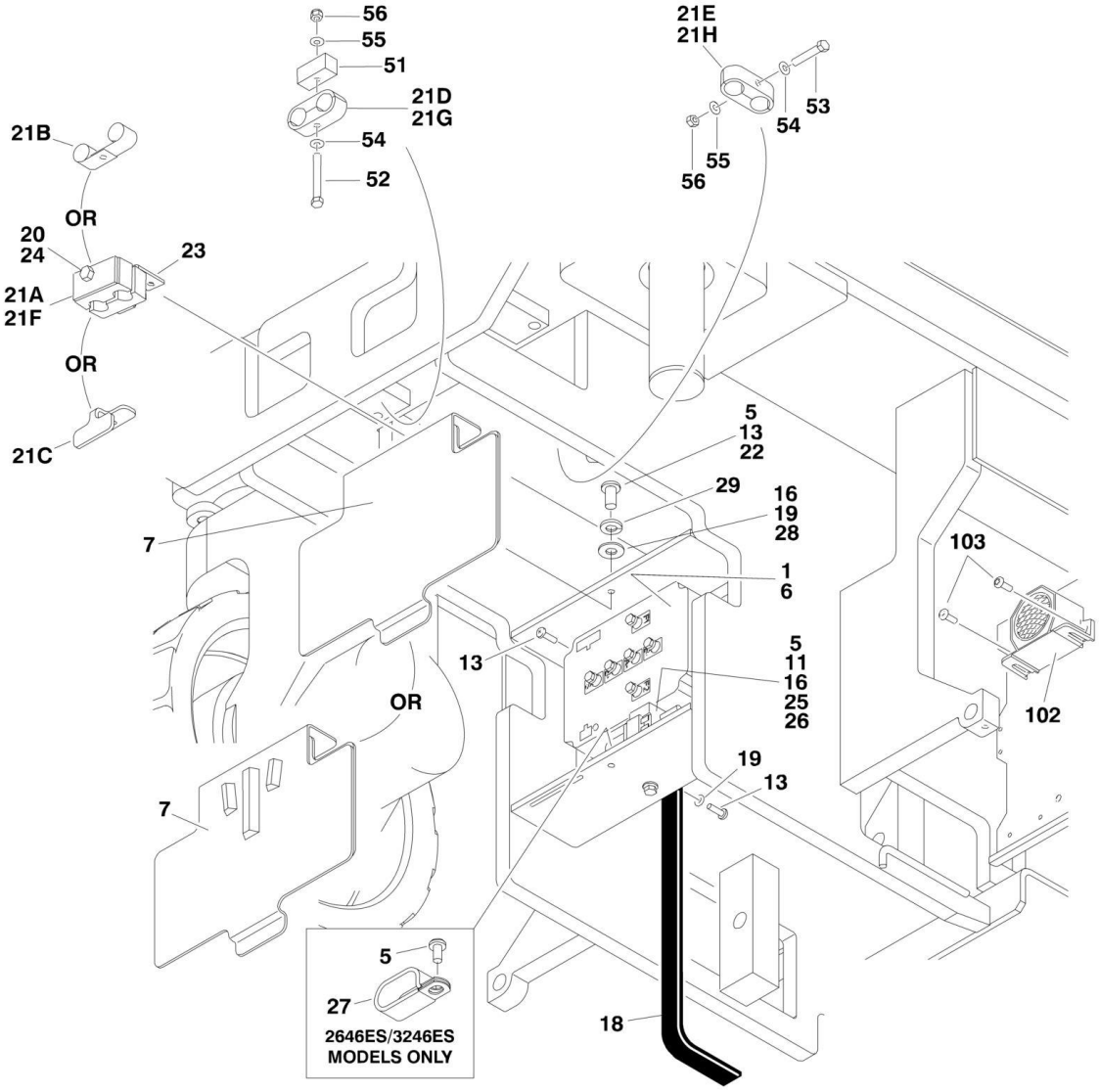

FIGURE 1-4. FRAME MOUNTED COMPONENTS

ITEM	PART NUMBER	QTY	DESCRIPTION	REV
		Ref	**CONTROLLER INSTALLATION**	
		Ref	**Controller Installation 1930ES:**	
	0272710	Ref	**Non-UL Spec**	L
	0274224	Ref	**UL Spec**	C
		Ref	**Controller Installation 2030ES/2630ES:**	
	0272711	Ref	**Non-UL Spec**	L
	0274225	Ref	**UL Spec**	C
		Ref	**Controller Installation 2646ES/3246ES:**	
	0273008	Ref	**Non-UL Spec**	L
	0274226	Ref	**UL Spec**	C
1	0100083	AR	Grease, Heat Transfer	
5	4191706	AR	Bolt M6 x 12	
6	1600346	1	Module, Control	
7		Ref	Cover Options:	
7		Ref	Cover 1930ES/2030ES/2630ES	
7	1671090	NLA	Cover - Non-UL Spec (Use p/n 1671132)	
7	1671181	1	Cover - UL Spec	
7		Ref	Cover 2646ES/3246ES	
7	1671106	NLA	Cover - Non-UL Spec (Use p/n 1671133)	
7	1671182	1	Cover - UL Spec	
11		Ref	Relay Options:	
11	3740130	1	Relay - USA Built Machines **(Prior to SN 0200128698)**	
11	3740130	1	Relay - Belgium Built Machines **(Prior to SN 1200003300)**	
11	0903069	1	Mounting Bracket Used on 3740130 Relay	
11		Ref	USA Built Machines **(SN 0200128698 through 0200135154)**	
11		Ref	Belgium Built Machines **(SN 1200003300 through 1200004293)**	
11	3740146	NLA	Relay - Non UL Spec (Use p/n 2915064)	
11	3740146	1	Relay - UL Spec	
11	0903098	1	Mounting Bracket Used on 3740146 on Relay	
		Ref	**Note: Relay p/n 3740130 Albright or Curtis brand has 4 terminals and no lead wires. Mounts with terminals to the side.**	
		Ref	**Relay p/n 3740146 Albright or Curtis brand has 4 terminals and no lead wires. Mounts with terminals facing up.**	
		Ref	**Relay p/n 3740150 is Trombetta brand has 2 terminals and 1 lead wire.**	
13	4191708	AR	Bolt M6 x 20	
16	4811700	AR	Flatwasher M6 Narrow	
18	4240147	1	Strap, Anti-Static	
19	4751400	AR	Flatwasher 1/4in Wide	
20	0700819	1	Bolt M8 x 55	
21		Ref	Clamp, Cable Options:	
		Ref	**Note: Due to service updates, cable clamps may be any of the various designs listed below. Visual identification will be required.**	
21		Ref	Non-UL Spec	
21A	1320162	1	Clamp (Only Available on 1930ES)	
21B	1320061	2	Clamp (Only Available on 2030ES/2630ES)	
21C	3574714	1	Clamp (Available on All Models)	
21D	1001091492	1	Clamp (Used as part of Service Update on 1930ES)	

ITEM	PART NUMBER	QTY	DESCRIPTION	REV
21E	1001094301	2	Clamp (Used as part of Service Update on 2030ES/2630ES/2646ES/3246ES)	
21		Ref	UL Spec	
21F	1320162	1	Clamp (Available on All Models)	
21G	1001091492	1	Clamp (Used as part of Service Update on 1930ES)	
21H	1001094301	2	Clamp (Used as part of Service Update on 2030ES/2630ES/2646ES/3246ES)	
22	4191709	1	Bolt M6 x 25	
23	4340751	Ref	Mount, Cable Clamp Options:	
23	4340751	AR	Mount, Cable Clamp - Non-UL Spec (1930ES Only)	
23	4340751	1	Mount, Cable Clamp - UL Spec	
24	4811900	1	Flatwasher M8	
25		Ref	Bolt M6 Options:	
25	0760606	1	Bolt M6 1930ES/2030ES/2630ES (12mm Length)	
25	0700608	1	Bolt M6 2646ES/3246ES (16mm Length)	
26	3290605	AR	Locknut M6	
27	1321283	AR	Clamp, Hose (2646ES/3246ES Only)	
28	4811702	AR	Flatwasher M6 Wide(Non-UL Spec)	
29	4831700	AR	Lockwasher M6 (Non-UL Spec)	
		Ref	**Items 51 - 56 may be used on machines with service update kits.**	
51	1001094124	1	Block, Spacer (1930ES Only)	
52	0700624	1	Bolt M6 x 80	
53	0700619	2	Bolt M6 x 55	
54	4751400	AR	Flatwasher 1/4in Wide	
55	4811700	AR	Flatwasher M6	
56	3290606	AR	Locknut M6	
		Ref	**ALARM INSTALLATIONS**	
	0272810	Ref	**ANSI Spec**	F
	0273443	Ref	**Australian Spec**	B
	0272811	Ref	**CE Spec**	D
	0272722	Ref	**Descent Alarm**	A
	0272913	Ref	**Motion Alarm**	A
101	4922861	1	Harness, Chassis (Not Shown - ELECTRICAL SECTION for Breakdown) (USA Built Machines) **(Prior to SN 0200126538)**	
101	4922861	1	Harness, Chassis (Not Shown - ELECTRICAL SECTION for Breakdown) (Belgium Built Machines) **(Prior to SN 1200003119)**	
102	0140043	1	Alarm	
103	4191706	2	Screw M6 x 12	

FIGURE 1-5. POTHOLE PROTECTION INSTALLATION (1930ES/2030ES/2630ES)

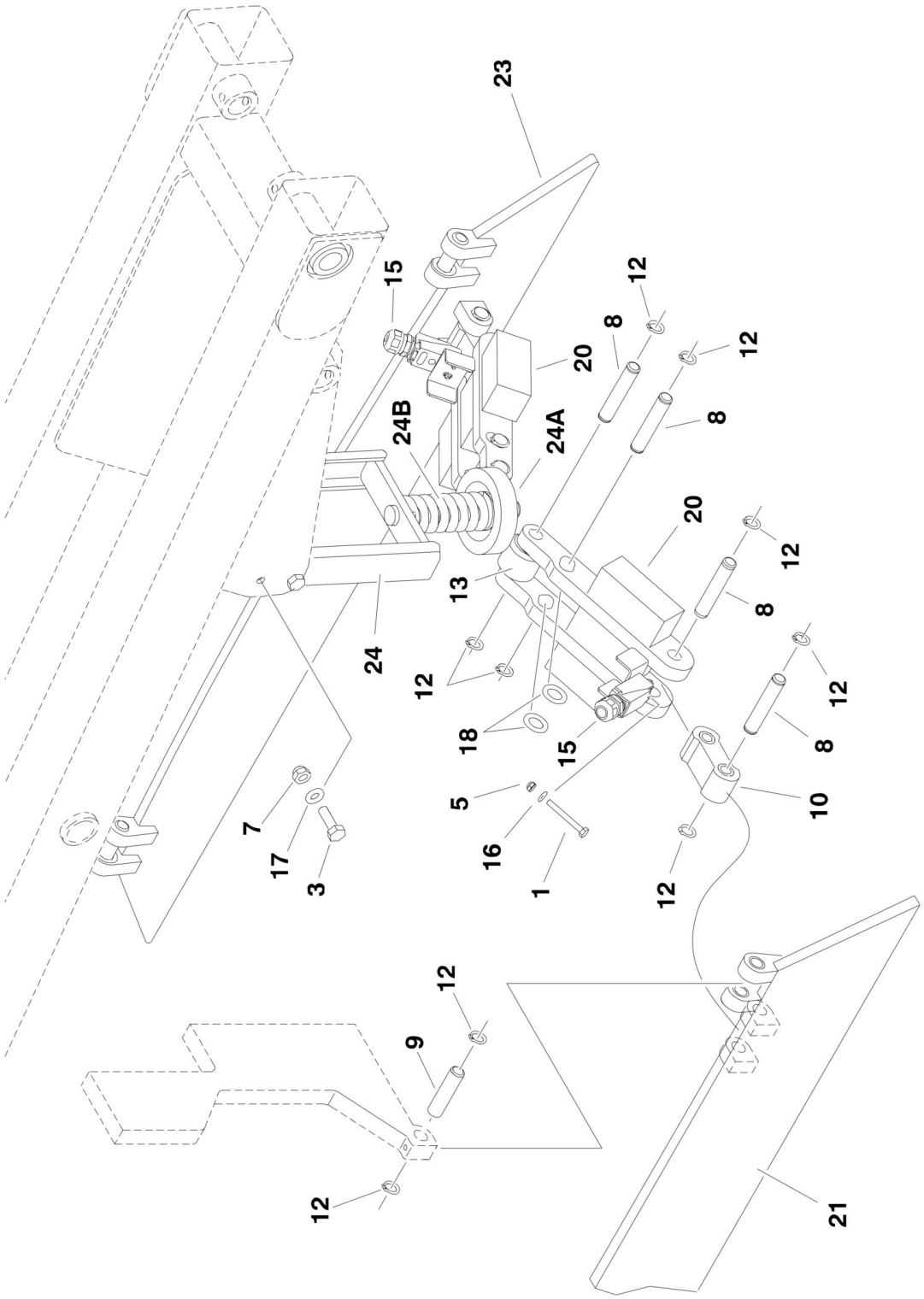

FIGURE 1-5. POTHOLE PROTECTION INSTALLATION (1930ES/2030ES/2630ES)

ITEM	PART NUMBER	QTY	DESCRIPTION	REV
		Ref	**POTHOLE PROTECTION INSTALLATION**	
	0272757	Ref	**Pothole Protection Installation 1930ES**	K
	0272758	Ref	**Pothole Protection Installation 2030ES/2630ES**	K
1	4010415	4	Screw M4 x 35	
3	0701014	4	Screw M10 x 30	
5	3290405	4	Locknut M4	
7	3291005	6	Locknut M10	
8	3423045	8	Pin	
9	3423046	NLA	Pin (Use p/n 3423189)	
10	3574176	2	Link	
10	0440263	4	Bushing	
12	3760348	20	Ring, Retaining	
13	3860108	2	Roller	
15	4360536	NLA	Switch Limit (Use p/n 1001109345)	
15	4360607	NLA	Switch Limit (Use p/n 1001109345)	
16	4750800	8	Flatwasher (Wide)	
17	4812000	4	Flatwasher M10	
18	4740086	8	Thrustwasher	
20	4846774	2	Link	
21		Ref	Support (Right) Options:	
21	4846775	1	Support (Right) 1930ES	
21	4846816	1	Support (Right) 2030ES/2630ES	
21	0440263	4	Bushing	
23		Ref	Support (Left) Options:	
23	4846861	1	Support (Left) 1930ES	
23	4846863	1	Support (Left) 2030ES/2630ES	
23	0440263	4	Bushing	
24	0060083	1	Actuator Assembly	A
24	4846773	1	Actuator	
24A	1440333	1	Collar, Actuator	
24A	3760115	1	Ring, Retaining	
24B	4160202	1	Spring	

FIGURE 1-6. POTHOLE PROTECTION INSTALLATION (2646ES/3246ES)

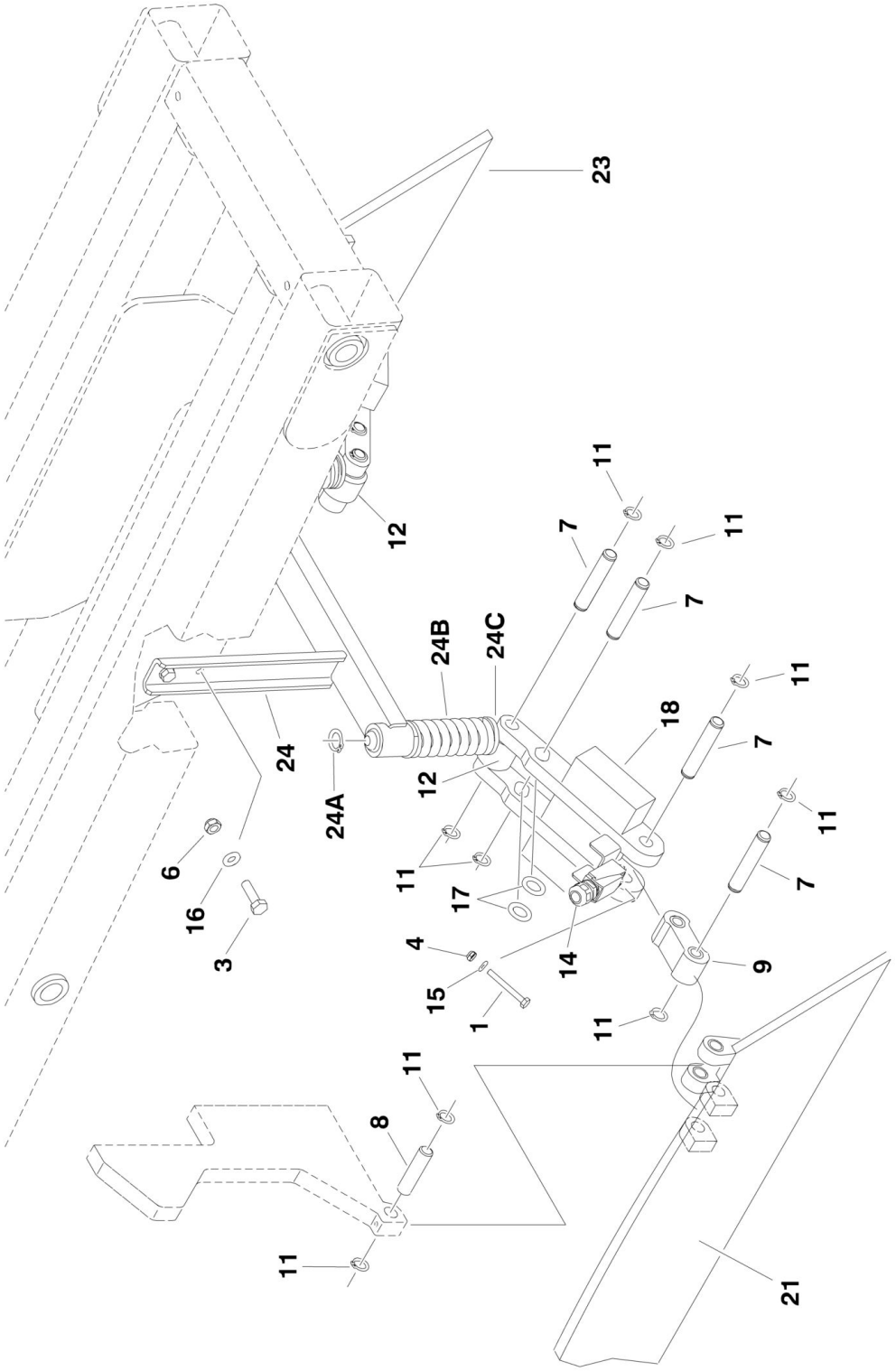

FIGURE 1-6. POTHOLE PROTECTION INSTALLATION (2646ES/3246ES)

ITEM	PART NUMBER	QTY	DESCRIPTION	REV
	0272759	Ref	**POTHOLE PROTECTION INSTALLATION (2646ES/3246ES)**	J
1	4010415	4	Screw M4 x 35	
3	0701015	4	Screw M10 x 35	
4	3290405	4	Locknut M4	
6	3291005	6	Locknut M10	
7	3423045	8	Pin	
8	3423046	NSS	Pin (Use p/n 3423189)	
9	3574176	2	Link	
9	0440263	4	Bushing	
11	3760348	20	Ring, Retaining	
12	3860108	2	Roller	
14	4360536	NLA	Switch, Limit (Use p/n 1001109345)	
14	4360607	NLA	Switch, Limit (Use p/n 1001109345)	
15	4750800	8	Flatwasher (Wide)	
16	4812000	4	Flatwasher M10	
17	4740086	8	Thrustwasher	
18	4846774	2	Link	
21	4846811	1	Support (Right)	
21	0440263	4	Bushing	
23	4846862	1	Support (Left)	
23	0440263	4	Bushing	
24	0060082	1	Actuator Assembly	A
24	4846810	1	Actuator	
24	0962292	4	Bushing	
24A	3760115	2	Ring, Retaining	
24B	4160202	2	Spring	
24C	4846788	2	Plunger	

FIGURE 1-7. BATTERY CHARGER ASSEMBLY AND INSTALLATION (MAC CHARGER WITH BREAKERS ON SIDE)

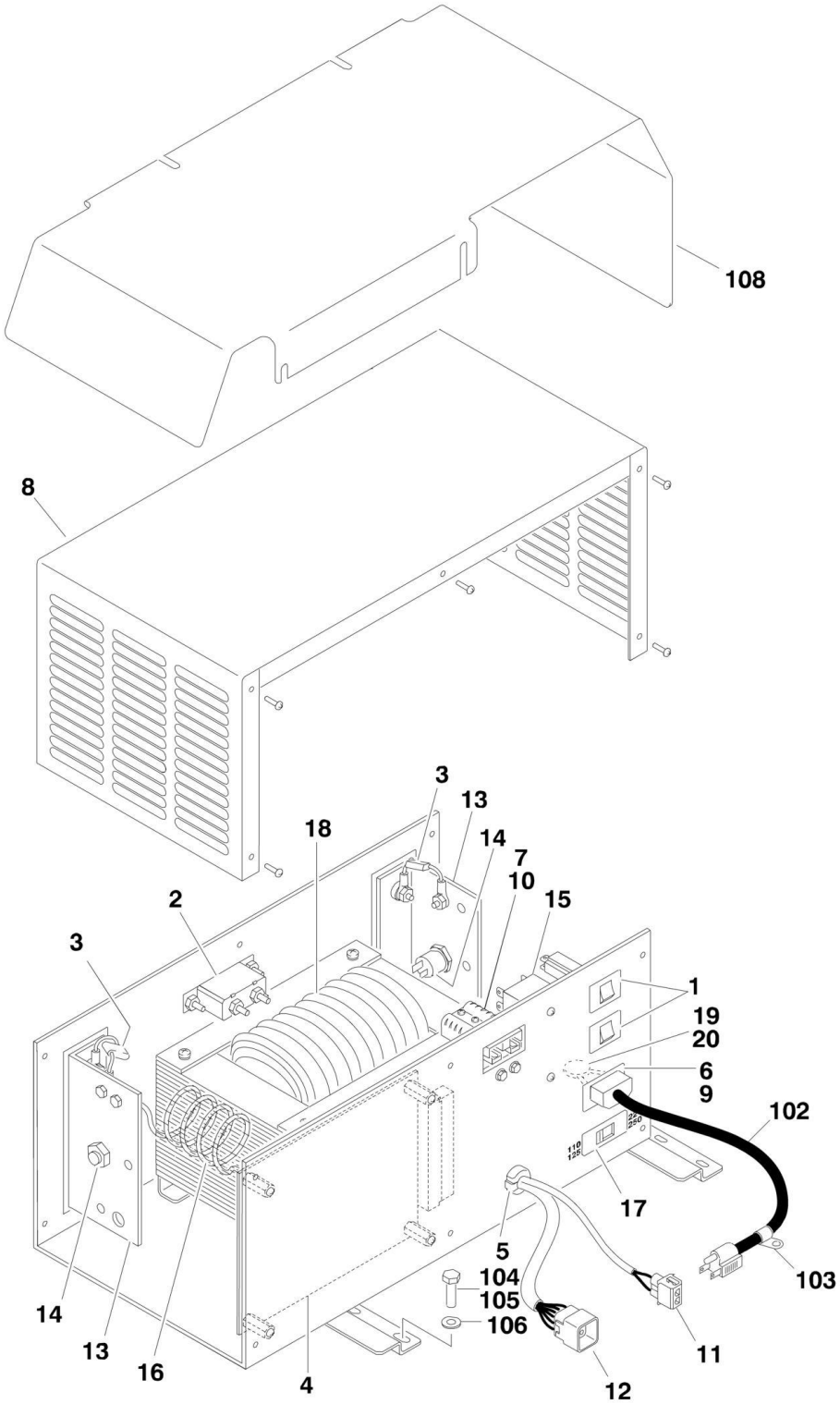

FIGURE 1-7. BATTERY CHARGER ASSEMBLY AND INSTALLATION (MAC CHARGER WITH BREAKERS ON SIDE)

ITEM	PART NUMBER	QTY	DESCRIPTION	REV
	0400218	Ref	**BATTERY CHARGER ASSEMBLY**	
1	7018514	2	Breaker, Circuit - AC	
2	7011509	1	Breaker, Circuit - DC	
3	7018577	2	Capacitor	
4	7022944	1	Card, Circuit	
5	7022947	1	Connector, Strain Relief	
6	See Note	NSS	Cord Set - AC (Note: Purchase Complete Assembly)	
7	7022945	1	Cord Set - DC	
8	See Note	NSS	Cover (Note: Purchase Complete Assembly)	
9	7018583	1	Plug, AC Inlet	
10	4460648	1	Plug, Anderson Battery Cable	
11	4460424	1	Connector, Female - 2 Position	
11	4460227	2	Pin, Male	
12	7022946	1	Harness with Connector	
12	4460899	1	Connector, Female - 6 Position	
12	4460464	6	Pin, Male	
13	7020613	1	Rectifier Assembly with Heat Shrink and Rectifiers	
14	7020673	1	Rectifier	
15	7018564	1	Relay	
16	7020674	1	Shunt Assembly	
17	7018586	1	Switch, Slide	
18	7022948	1	Transformer	
19	7018589	1	Varistor Assembly	
20	7020663	1	Varistor	
		Ref	**BATTERY CHARGER INSTALLATION**	
	0272874	Ref	**AC Cable Has Factory Supplied Plug**	E
	0272875	Ref	**AC Cable Has Locally Supplied Plug**	E
101	0400218	1	Battery Charger Assembly (See Items 1-20 for Breakdown)	
102		Ref	Cable, AC Options:	
102	1060688	1	Factory Supplied Plug	
102	1060689	1	Locally Supplied Plug	
103	1320043	1	Clamp	
104	4191707	3	Screw M6 x 16	
105	3900267	1	Capscrew	
106	4811700	3	Flatwasher M6	
107	0751006	2	Screw, Pan Head (Thread Forming) (Not Shown)	
108	3574843	1	Plate, Charger Cover	

FIGURE 1-8. BATTERY CHARGER ASSEMBLY AND INSTALLATION (MAC CHARGER WITH BREAKERS ON END)

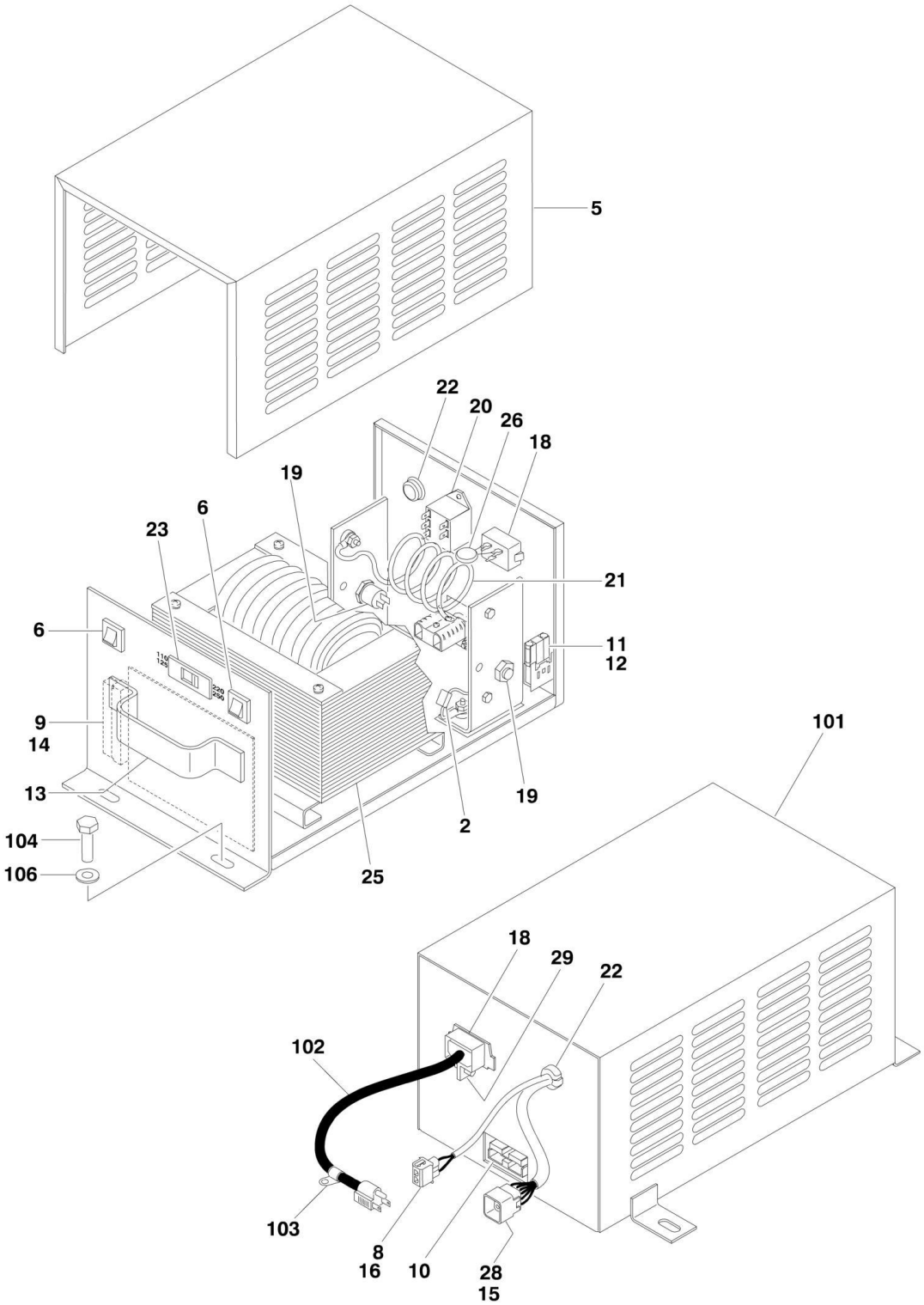

FIGURE 1-8. BATTERY CHARGER ASSEMBLY AND INSTALLATION (MAC CHARGER WITH BREAKERS ON END)

ITEM	PART NUMBER	QTY	DESCRIPTION	REV
		Ref	**BATTERY CHARGER ASSEMBLY**	
	0400220	Ref	**All Specs except Japanese Spec**	B
	0400221	Ref	**Japanese Specs Only**	B
2	7018577	2	Capacitor	
5		Ref	Case Cover, Replacement Options:	
5	7022951	1	Cover All Specs except Japanese Spec	
5	7022958	1	Cover Japanese Specs Only	
6		Ref	Circuit Breaker, AC Options:	
6	7018514	2	Circuit Breaker All Specs except Japanese Spec	
6	7018597	1	Circuit Breaker Japanese Specs Only	
8	4460227	1	Receptacle, Female - 2 Position (was p/n 7011621)	
8	4460267	2	Pin, Male	
9	7022952	1	Card, Circuit	
10	7022953	1	Cord, DC	
11	7022942	1	Fuse Assembly	
12	7018570	1	Fuse	
13	See Note	NSS	Handle (Note: Not Available for Purchase)	
14	7022954	1	Harness	
15	7022955	1	Harness	
16	7022956	1	Interlock Assembly (Includes Item 3)	
18	7022957	1	Plug, Inlet	
19	7020673	1	Rectifier	
20	7018564	1	Relay	
21	7020674	1	Shunt Assembly	
22		Ref	Connector, Strain Relief Options:	
22	7022947	1	Connector All Specs except Japanese Spec	
22	7011528	1	Connector Japanese Specs Only	
23	7018586	1	Switch, Slide	
25		Ref	Transformer Options:	
25	7022948	1	Transformer All Specs except Japanese Spec	
25	7022959	1	Transformer Japanese Specs Only	
26		Ref	Varistor Assembly Options:	
26	7018589	1	Varistor Assembly All Specs except Japanese Spec	
26	7020603	1	Varistor Assembly Japanese Specs Only	
27	See Note	NSS	Varistor (Note: Use Item 26)	
28	4460899	1	Receptacle, Female - 6 Position	
28	4460464	6	Pin, Male	
29	70002271	1	Relief, Strain	
		Ref	**BATTERY CHARGER INSTALLATION**	
	0272874	Ref	**AC Cable Has Factory Supplied Plug (All Specs except Japanese Specs)**	G
	0273681	Ref	**AC Cable Has Factory Supplied Plug (Japanese Specs)**	B
	0272875	Ref	**AC Cable Has Locally Supplied Plug (All Specs)**	F
101		Ref	Battery Charger Assembly Options (See Items 1-28 for Breakdown):	
101	0400220	1	Battery Charger Assembly All Specs except Japanese Specs	
101	0400221	1	Battery Charger Assembly Japanese Specs Only	
102		Ref	Cable, AC Options:	
102	1060688	1	Cable, AC - Factory Supplied Plug	

SECTION 1 - FRAME

ITEM	PART NUMBER	QTY	DESCRIPTION	REV
102	1060689	1	Cable, AC - Locally Supplied Plug	
103	1321293	1	Clamp	
104	4191707	2	Screw M6 x 16	
106	4811700	2	Flatwasher M6	

FIGURE 1-9. BATTERY CHARGER WITH INVERTER ASSEMBLY AND INSTALLATION (OPTIONAL ON ANSI SPEC MACHINES)

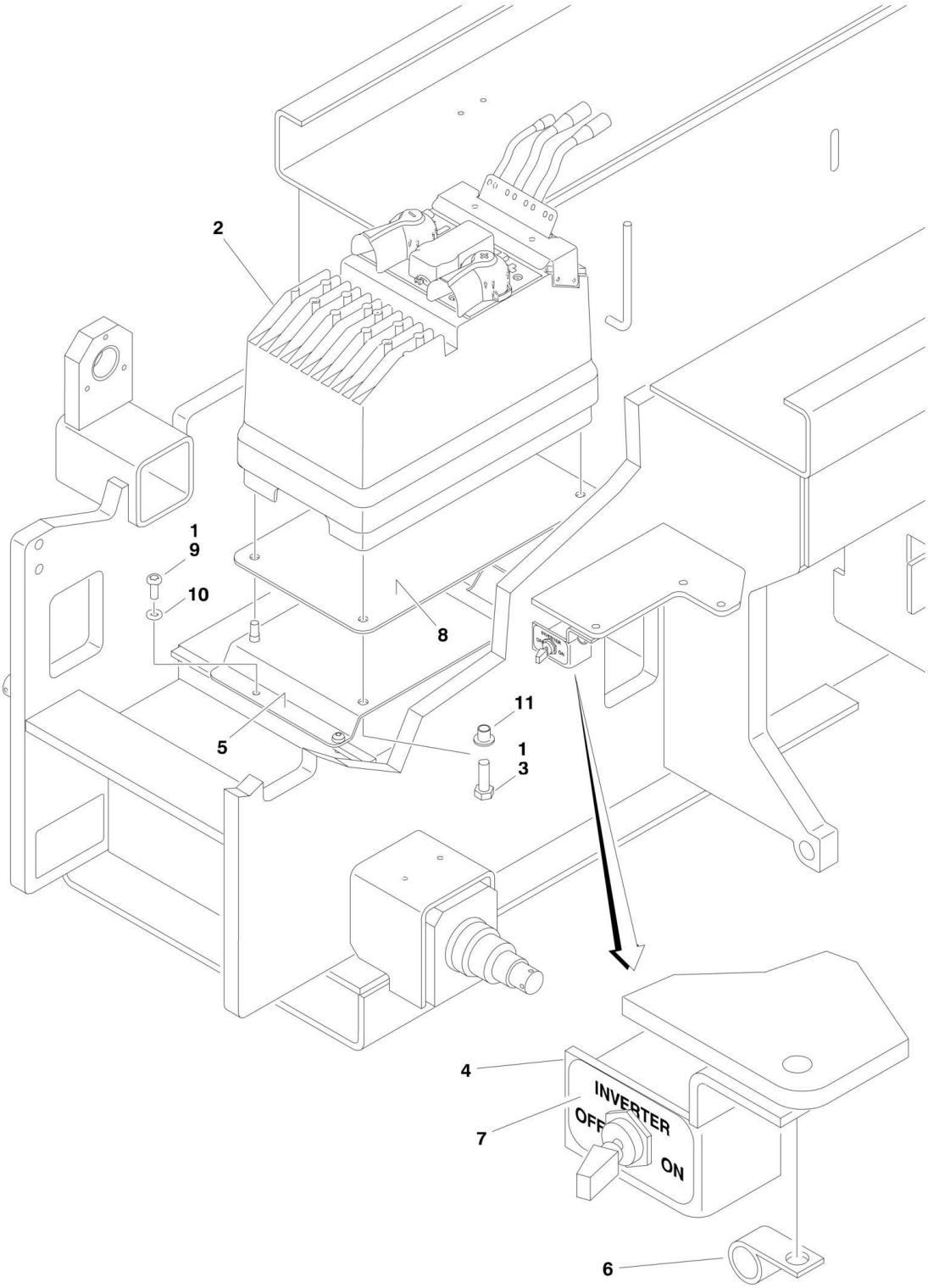

FIGURE 1-9. BATTERY CHARGER WITH INVERTER ASSEMBLY AND INSTALLATION (OPTIONAL ON ANSI SPEC MACHINES)

ITEM	PART NUMBER	QTY	DESCRIPTION	REV
		Ref	**BATTERY CHARGER ASSEMBLY**	
	2902502	Ref	**Battery Charger Assembly 1930ES**	A
	0275104	Ref	**Battery Charger Assembly 2030ES/2630ES**	B
	0275105	Ref	**Battery Charger Assembly 2646ES/3246ES**	B
1	0100011	AR	Compound, Locking	
2	0400237	NLA	Charger/Inverter Assembly (Use p/n 1001093839)	
3		Ref	Hardware Options:	
3	0760812	4	Bolt M8 x 25	
3	0760814	4	Bolt M8 x 30	
3	3290805	4	Nut M8	
4	0902780	1	Bracket, Mounting (Remote Switch)	
5		Ref	Bracket, Mounting (Charger/Inverter)	
5	0903410	1	Bracket, Mounting (Charger/Inverter) 1930ES	
5	0903319	1	Bracket, Mounting (Charger/Inverter) 2030ES/2630ES/2646ES/3246ES	
6	1320043	1	Clamp	
7	1705052	1	Decal - On/Off	
8	2820239	1	Insulation, Charger Mounting	
9	4191707	AR	Screw M6 x 16	
10	4811700	2	Flatwasher M6	
11	4740562	4	Washer, Special	
18	1706749	1	Decal - Inverter (Not Shown - Located on Frame Near Inverter)	
19		Ref	Decal - Hazardous Voltage Options (Not Shown - Located on Platform Near AC Box):	
19	1706765	1	Decal - Hazardous Voltage English Language	
19	1001136847	1	Decal - Hazardous Voltage Spanish Language	

FIGURE 1-10. LADDERS, BEACON LIGHT AND ROTARY SENSOR COVER INSTALLATIONS

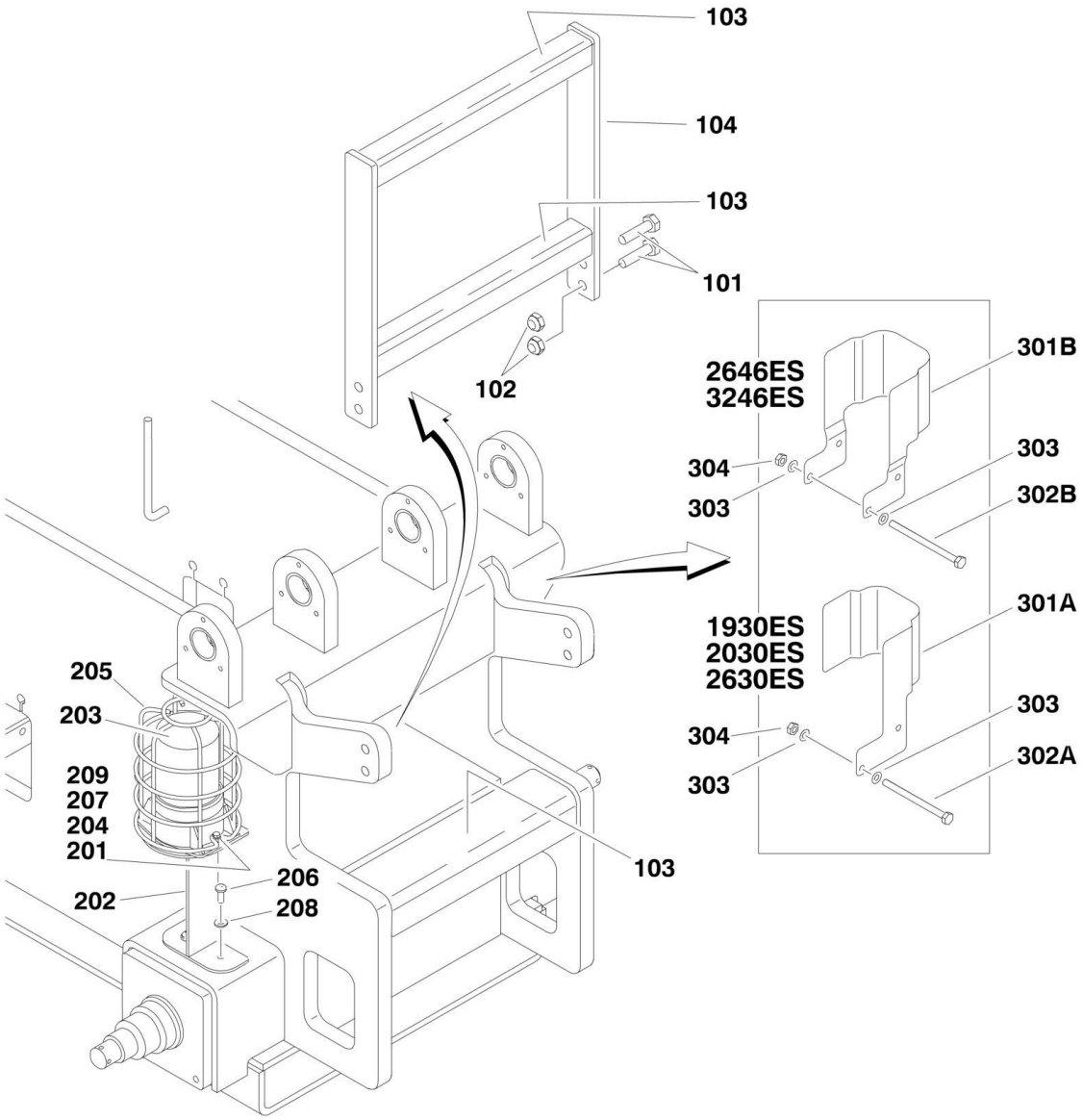

FIGURE 1-10. LADDERS, BEACON LIGHT AND ROTARY SENSOR COVER INSTALLATIONS

ITEM	PART NUMBER	QTY	DESCRIPTION	REV
		Ref	**LADDER INSTALLATIONS**	
	0272887	Ref	**Ladder Installations 2030ES**	B
	0272888	Ref	**Ladder Installations 2630ES**	B
		Ref	**Note: Not Required on Other Models**	
101	0701016	4	Bolt M10 x 40	
102	3291005	4	Locknut M10	
103	4420070	3	Tape, Anti-Skid	
104		Ref	Ladder Options:	
104	4846812	1	Ladder 2030ES	
104	4846813	1	Ladder 2630ES	
		Ref	**BEACON LIGHT INSTALLATIONS**	
	0272309	Ref	**Beacon Light Installations 1930ES (Not Shown)**	D
	0274012	Ref	**Beacon Light Installations 2030ES/2630ES**	B
	0272980	Ref	**Beacon Light Installations 2646ES/3246ES**	D
201	0760410	2	Bolt M4 x 20	
202		Ref	Bracket Options:	
202	0902905	1	Bracket 1930ES	
202	0903086	1	Bracket 2030ES/2630ES	
202	0902906	1	Bracket 2646ES/3246ES	
203	2920161	1	Light, Beacon	
203	7016319	1	Bulb, Replacement	
203	7016372	1	Len, Replacement	
204	3290405	2	Locknut M4	
205	4060865	1	Guard	
206	4191707	2	Screw M6 x 16	
207	4811400	2	Flatwasher M4 (USA Built Machines) **(Prior to SN 0200128068)**	
207	4811400	2	Flatwasher M4 (Belgium Built Machines) **(Prior to SN 1200002847)**	
208	4811700	AR	Flatwasher M6	
209	4750800	2	Flatwasher #8 (Wide) (USA Built Machines) **(SN 0200128068 through 0200135154)**	
209	4750800	2	Flatwasher #8 (Wide) (Belgium Built Machines) **(SN 1200002847 through 1200004293)**	
		Ref	**ROTARY ANGLE SENSOR COVER KIT**	
		Ref	**Note: This kit is an optional aftermarket Add-on for USA Built Machines SN 0200117602 through 0200135154 Only and Belgium Built Machines SN 1200001665 through 1200004293 Only. Not Available on previous SNs due to changes in frame design. Kit also includes instructions. Parts listed below are for service.**	
	1001105108	Ref	**Rotary Angle Sensor Cover Kit 1930ES/2030ES/2630ES**	
	1001105109	Ref	**Rotary Angle Sensor Cover Kit 2646ES/3246ES**	
301		Ref	Cover Options:	
301A	1001103029	1	Cover for 1930ES/2030ES/2630ES	
301B	1001103030	1	Cover for 2646ES/3246ES	
302		Ref	Bolt M6 Options:	
302A	0760610	2	Bolt 20mm Length for 1930ES/2030ES/2630ES	
302B	0760612	2	Bolt 25mm Length for 2646ES/3246ES	
303	4811700	4	Flatwasher 6mm	
304	3290605	2	Locknut M6	

SECTION 2 - GROUND COMPONENTS

FIGURE 2-1. BATTERIES AND COVERS INSTALLATION (Prior to SN 0200128413, Prior to SN 1200002974)

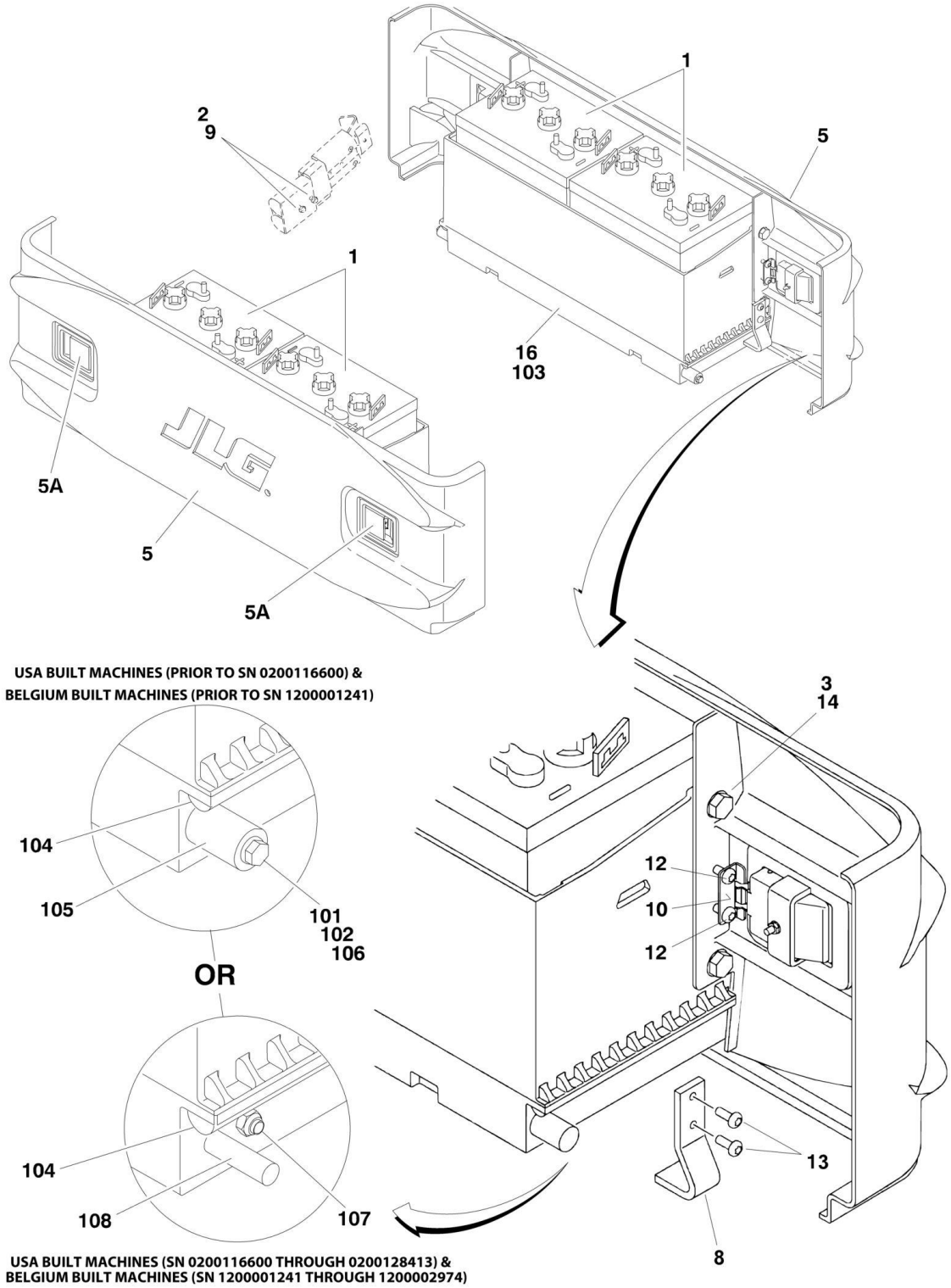

FIGURE 2-1. BATTERIES AND COVERS INSTALLATION (Prior to SN 0200128413, Prior to SN 1200002974)

ITEM	PART NUMBER	QTY	DESCRIPTION	REV
		Ref	**BATTERIES AND COVERS INSTALLATION**	
	0272719	Ref	**Batteries and Covers Installation 1930ES (220 A-HR)**	J
	0274222	Ref	**Batteries and Covers Installation 1930ES (220 A-HR) (Lock)**	B
	0274221	Ref	**Batteries and Covers Installation 1930ES (220 A-HR) (UL Spec) (Lock)**	B
	0272827	Ref	**Batteries and Covers Installation 2030ES/2630ES/2646ES/3246ES (220 A-HR) (Standard)**	J
	0274215	Ref	**Batteries and Covers Installation 2030ES/2630ES/2646ES/3246ES (220 A-HR) (Lock)**	B
	0274214	Ref	**Batteries and Covers Installation 2030ES/2630ES/2646ES/3246ES (220 A-HR) (UL Spec) (Lock)**	B
	0272720	Ref	**Batteries and Covers Installation 2030ES/2630ES/2646ES/3246ES (245 A-HR) (Hi-Output)**	J
	0274217	Ref	**Batteries and Covers Installation 2030ES/2630ES/2646ES/3246ES (245 A-HR) (Hi-Output) (Lock)**	B
	0274216	Ref	**Batteries and Covers Installation 2030ES/2630ES/2646ES/3246ES (245 A-HR) (Hi-Output) (UL Spec) (Lock)**	B
	0272878	Ref	**Anti-Vandelism Package Installation**	A
1		Ref	Battery Options:	
1	0400215	4	Battery Type GC Type with 225 AH Rating	
1	0400216	4	Battery Type EV Type with 244 AH Rating (Not Available on 1930ES)	
2	4031713	2	Bolt M6 x 40	
3	0760610	8	Bolt M6 x 20	
5		Ref	Cover Options:	
		Ref	Note: When replacing p/n 1671096 for service, drill 7mm holes to 11mm diameter.	
5	1671096	NLA	Cover (Standard) (Use p/n 2915029)	
5	1671155	NLA	Cover (Standard) (Use p/n 2915029)	
5	1671196	NLA	Cover (Standard) (Use p/n 2915029)	
5	1671175	NLA	Cover (Lockable) (Use p/n 2915030)	
5	1671197	NLA	Cover (Lockable) (Use p/n 2915030)	
5	1671180	NLA	Cover (Lockable) (UL Spec) (Use p/n 2915031)	
5A	2940151	4	Latch, Standard (2 Per Cover)	
5A	2940153	4	Latch, Anti-Vandelism Lockable (2 Per Cover)	
5A	7027862	AR	Key	
7		Ref	Battery Cable Kit Options (Not Shown - See ELECTRICAL SECTION for Breakdown):	
7	2902239	1	Battery Cable Kit 1930ES	
7	2902248	1	Battery Cable Kit 2030ES/2630ES/2646ES/3246ES	
8		Ref	Plate, Slide Stop Options:	
8	3574427	NLA	LH (Use p/n 3574981)	
8	3574427	NLA	RH (Use p/n 3574984)	
9	3290605	2	Locknut M6	
10	3574428	4	Plate, Latch	
12	4191706	8	Screw M6 x 12	
13	4191707	8	Screw M6 x 16	
14	4811700	8	Flatwasher M6	
16		Ref	Tray Assembly Options (See Items 101-106 for Breakdown):	
16	0273110	NLA	Tray Assembly (Use p/n 0273698) **(Prior to SN 0200116600)**	

ITEM	PART NUMBER	QTY	DESCRIPTION	REV
16	0273698	2	Tray Assembly **(SN 0200116600 through 0200128413)**	
16	0273110	NLA	Tray Assembly (Use p/n 0273698) **(Prior to SN 1200001241)**	
16	0273698	2	Tray Assembly **(SN 1200001241 through 1200002974)**	
19	4240172	4	Strap, Battery (UL Spec - Not Shown)	
		Ref	**TRAY ASSEMBLY OPTIONS:**	
	0273110	Ref	**USA Built Machines (Prior to SN 0200116600)**	D
	0273698	Ref	**USA Built Machines (SN 0200116600 through 0200128413)**	D
	0273110	Ref	**Belgium Built Machines (Prior to SN 1200001241)**	D
	0273698	Ref	**Belgium Built Machines (SN 1200001241 through 1200002974)**	D
101	0100011	AR	Compound, Locking	
102	0700616	2	Bolt M6 x 40 (USA Built Machines) **(Prior to SN 0200116600)**	
102	0700616	2	Bolt M6 x 40 (Belgium Built Machines) **(Prior to SN 1200001241)**	
103	Purchase Item 16	1	Tray, Battery	
104	3340975	2	Pad, Wear	
105	3860111	2	Roller (USA Built Machines) **(Prior to SN 0200116600)**	
105	3860111	2	Roller (Belgium Built Machines) **(Prior to SN 1200001241)**	
106	4811700	2	Flatwasher M6 (USA Built Machines) **(Prior to SN 0200116600)**	
106	4811700	2	Flatwasher M6 (Belgium Built Machines) **(Prior to SN 1200001241)**	
107	3290605	2	Locknut (USA Built Machines) **(SN 0200116600 through 0200128413)**	
107	3290605	2	Locknut (Belgium Built Machines) **(SN 1200001241 through 1200002974)**	
108		Ref	Battery Box Stop Options (USA Built Machines): **(SN 0200116600 through 0200128413)**	
108		Ref	Battery Box Stop Options (Belgium Built Machines): **(SN 1200001241 through 1200002974)**	
		Ref	**Note: Requires (2) 3820032 Rivet and (1) 4811600 Washer**	
108	4220208	NLA	LH (Use p/n 4220252)	
108	4220208	NLA	RH (Use p/n 4220253)	
		Ref	**Note: Old design rollers are not interchangeable with new design stops. Complete Tray Assembly # 0273698 must be purchased if upgrading to new design Battery Box Stops.**	

FIGURE 2-2. BATTERIES AND COVERS INSTALLATION (SN 0200128413 through 0200135154, SN 1200002974 through 1200004293)

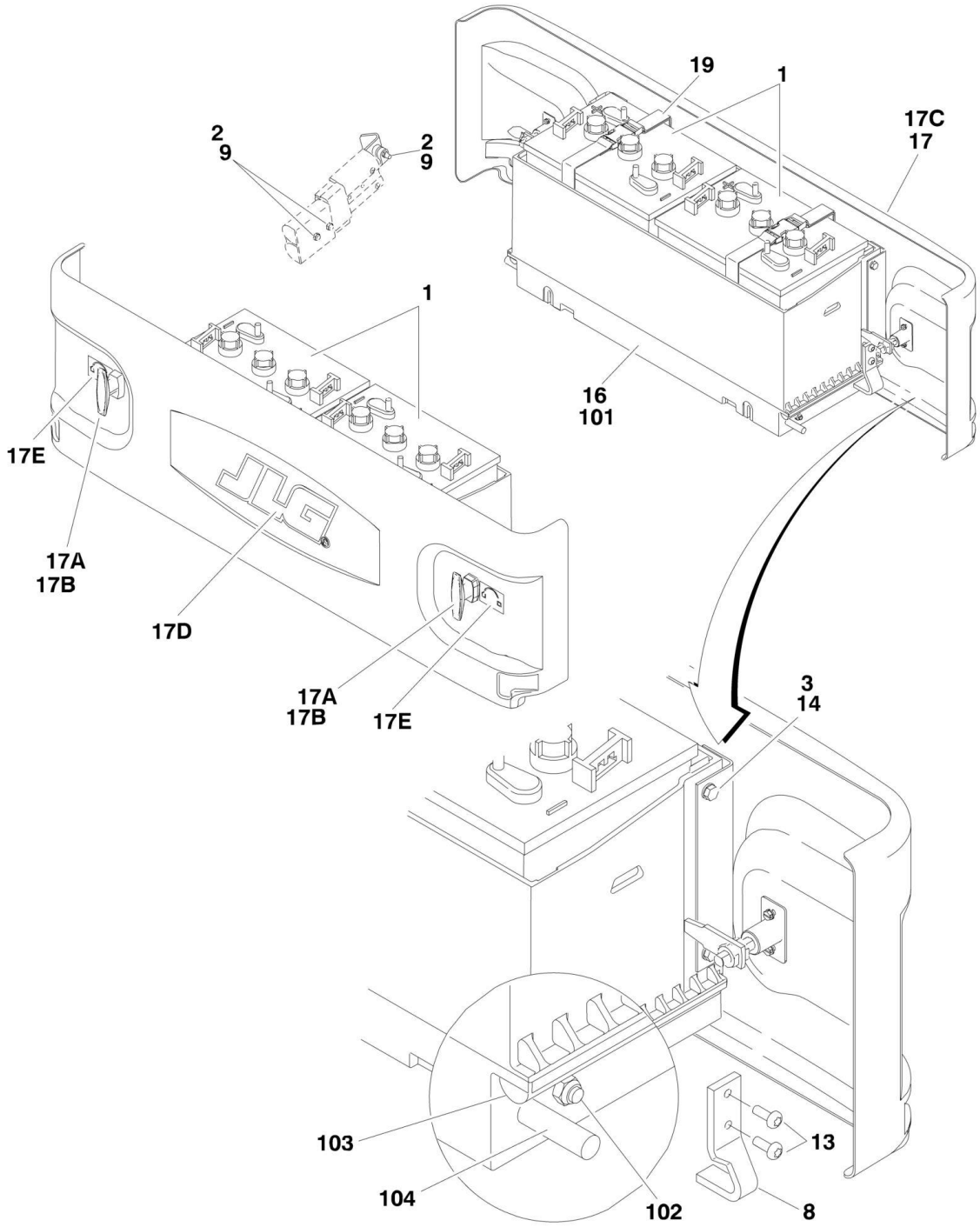

FIGURE 2-2. BATTERIES AND COVERS INSTALLATION (SN 0200128413 through 0200135154, SN 1200002974 through 1200004293)

ITEM	PART NUMBER	QTY	DESCRIPTION	REV
		Ref	**BATTERIES AND COVERS INSTALLATION**	
		Ref	**GC Type with 225 AH Rating Batteries:**	
	0272719	Ref	**Batteries and Covers Installation 1930ES (Standard Covers)**	L
	0274222	Ref	**Batteries and Covers Installation 1930ES (Lockable Covers)**	D
	0274221	Ref	**Batteries and Covers Installation 1930ES (UL Spec) (Lockable Covers)**	D
	0272827	Ref	**Batteries and Covers Installation 2030ES/2630ES/2646ES/3246ES (Standard Cover)**	L
	0274215	Ref	**Batteries and Covers Installation 2030ES/2630ES/2646ES/3246ES (Lockable Cover)**	D
	0274214	Ref	**Batteries and Covers Installation 2030ES/2630ES/2646ES/3246ES (UL Spec) (Lockable Covers)**	D
		Ref	**EV Type with 244 AH Rating Batteries:**	
	0272720	Ref	**Batteries and Covers Installation 2030ES/2630ES/2646ES/3246ES (Standard Covers)**	L
	0274217	Ref	**Batteries and Covers Installation 2030ES/2630ES/2646ES/3246ES (Lockable Covers)**	D
	0274216	Ref	**Batteries and Covers Installation 2030ES/2630ES/2646ES/3246ES (UL Spec) (Lockable Covers)**	D
1		Ref	Battery Options:	
1	0400215	4	Battery GC Type with 225 AH Rating	
1	0400216	4	Battery EV Type with 244 AH Rating (Not Available on 1930ES)	
2		Ref	Bolt Options:	
2	0760616	AR	Bolt M6 x 40, Hexhead	
2	4031713	AR	Bolt M6 x 40, Sockethead	
3	0760610	8	Bolt M6 x 20	
8		Ref	Plate, Slide Stop Options:	
8	3574981		Plate, Slide Stop - Left Side	
8	3574984		Plate, Slide Stop - Right Side	
9	3290605	AR	Locknut M6	
13	4191707	8	Screw M6 x 16	
14	4811700	8	Flatwasher M6	
16		Ref	Tray Assembly Options (See Items 101-106 for Breakdown):	
16	0273698	2	Tray - USA and Belgium	
16	0861678	2	Tray - UL Spec	
17		Ref	Cover Options:	
17		Ref	USA Built Machines **(SN 0200128413 through 0200130606)**	
17		Ref	Belgium Built Machines **(SN 1200002974 through 1200003526)**	
17	1671196	NLA	Cover - Standard (Use p/n 2915029)	
17	1671197	NLA	Cover - Lockable (Use p/n 2915030)	
17	1671200	NLA	Cover - UL Spec - Lockable (Use p/n 1671204)	
17		Ref	USA Built Machines **(SN 0200130607 through 0200135154)**	
17		Ref	Belgium Built Machines **(SN 1200003527 through 1200004293)**	
17	1671202	2	Cover - Standard	
17	1671204	2	Cover - Lockable	
17	1671200	NLA	Cover - UL Spec - Lockable (Use p/n 1671204)	
17A		Ref	Latch Options (2 Per Cover):	
17A	2940174	4	Standard	

ITEM	PART NUMBER	QTY	DESCRIPTION	REV
17A	2940175	4	Locking	
17A	7027863	4	Key	
17B	4071102	4	Shim, Latch (2 Per Cover)	
17C	1671203	1	Cover, Battery (USA Built Machines) **(SN 0200130607 through 0200135154)**	
17C	1671203	1	Cover, Battery (Belgium Built Machines) **(SN 1200003527 through 1200004293)**	
17D	1705754	1	Decal - JLG (USA Built Machines) **(SN 0200130607 through 0200135154)**	
17D	1705754	1	Decal - JLG (Belgium Built Machines) **(SN 1200003527 through 1200004293)**	
17E	1706350	2	Decal - Cover (USA Built Machines) **(SN 0200130607 through 0200135154)**	
17E	1706350	2	Decal - Cover (Belgium Built Machines) **(SN 1200003527 through 1200004293)**	
19	4240172	4	Strap, Battery (UL Spec)	
		Ref	**TRAY ASSEMBLY OPTIONS:**	
	0273698	Ref	**USA and Belgium**	E
	0861678	Ref	**UL Spec**	C
101	Purchase Item 16	1	Tray, Battery	
102	3290605	2	Locknut	
103	3340975	2	Pad, Wear (Note: Wear Pad not available separately from Tray Assembly on some applications)	
104		Ref	Stop, Battery Box Options:	
		Ref	**Note: Requires (2) 3820032 Rivet & (1) 4811600 Washer**	
104	4220208	NLA	LH (Use p/n 4220252)	
104	4220208	NLA	RH (Use p/n 4220253)	
105	3820032	AR	Rivet (USA Built Machines - Not Shown) **(SN 0200130607 through 0200135154)**	
105	3820032	AR	Rivet (Belgium Built Machines - Not Shown) **(SN 1200003527 through 1200004293)**	
106	4811600	AR	Washer (USA Built Machines - Not Shown) **(SN 0200130607 through 0200135154)**	
106	4811600	AR	Washer (Belgium Built Machines - Not Shown) **(SN 1200003527 through 1200004293)**	

FIGURE 2-3. GROUND CONTROL ASSEMBLY AND INSTALLATION (Prior to SN 0200117805, Prior to SN 1200001367)

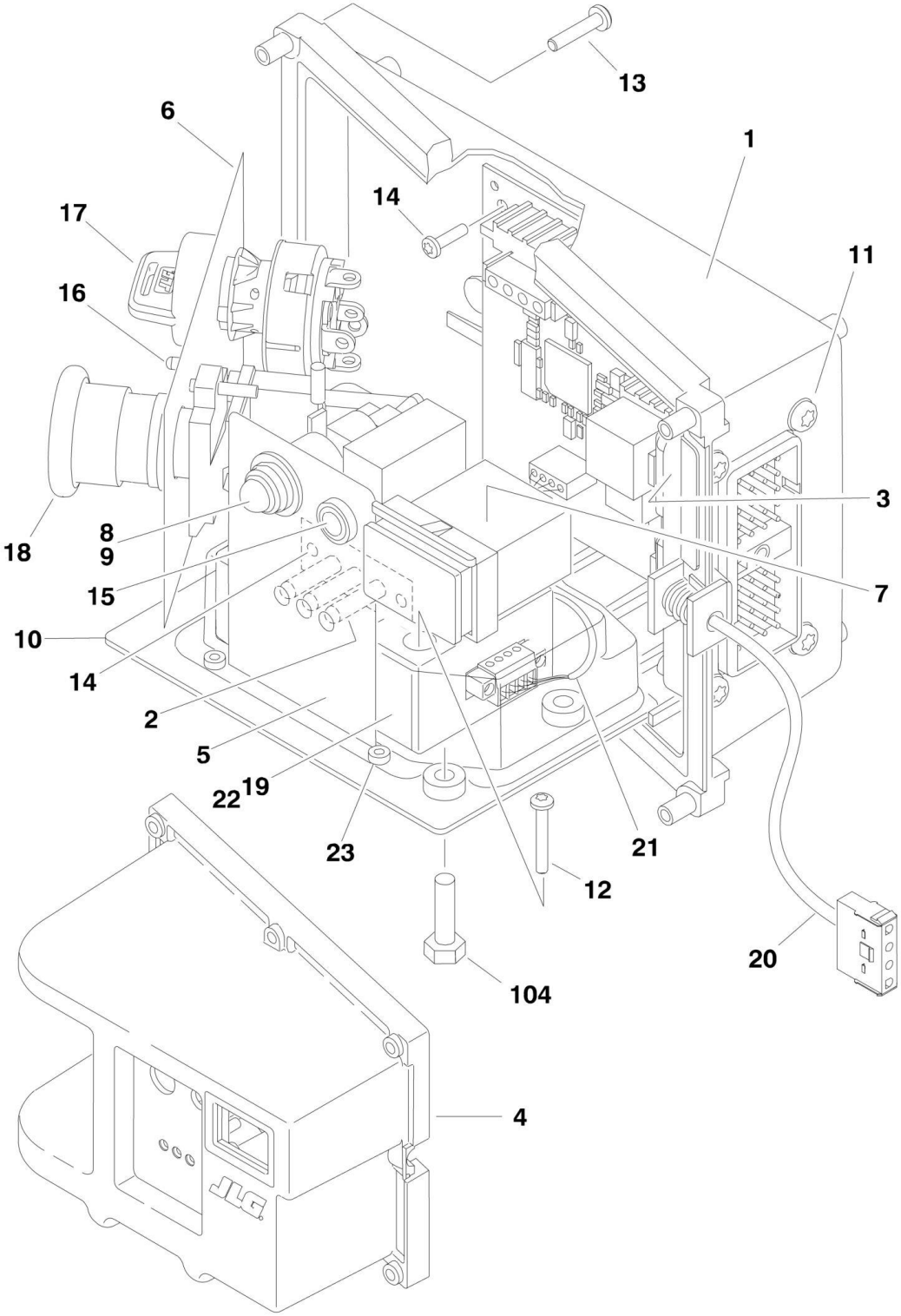

FIGURE 2-3. GROUND CONTROL ASSEMBLY AND INSTALLATION (Prior to SN 0200117805, Prior to SN 1200001367)

ITEM	PART NUMBER	QTY	DESCRIPTION	REV
		Ref	**GROUND CONTROL ASSEMBLY (USA BUILT MACHINES) (Prior to SN 0200117805)**	
		Ref	**GROUND CONTROL ASSEMBLY (BELGIUM BUILT MACHINES) (Prior to SN 1200001367)**	
	0272780	Ref	**ANSI and ANSI Export Specs**	I
	0273444	Ref	**Australian Spec**	F
	0272781	Ref	**CE Spec**	I
1	0380025	1	Box, Ground Control	
2	0610161	1	Board, PC (Battery Charger LED)	
3	0610164	NLA	Board, PC (Ground Control) (Use p/n 1600419)	
		Ref	**Note: PC Board must be recalibrated when replaced.**	
3	2915039	1	Upgrade Kit (Includes Cables, Programming Instructions and CD Software) (Note: Use with p/n 1600419 PC Board. Must be Purchased Separately)	B
4	1671105	1	Cover, Front	
5		Ref	Decal - LED Options:	
5	1705696	1	Decal - LED ANSI/ANSI Export/Australian Spec	
5	1705697	1	Decal - LED CE/Australian Spec	
6	1705698	1	Decal - Function	
7	2420172	1	Hourmeter	
8		Ref	Component Options:	
8	3520193	1	Plug (ANSI/ANSI Export/Australian Specs)	
8	2920026	1	Lamp (CE Spec)	
9		Ref	Bulb Options:	
9	Not Required	0	Bulb ANSI/ANSI Export Spec	
9	2920094	1	Bulb CE/Australian Spec	
10	3574330	1	Plate, Mounting	
11	3900336	4	Screw, Torx #10-32NC x 1/2in	
12	3900337		Screw, Torx M3.5 x 25	
13	3900338	6	Screw, Torx M4 x 20	
14	3900339	5	Screw, Plastite #6 x 1/2in	
15	4360069	1	Breaker, Circuit - 10 Amp	
16	4360328	1	Switch, Toggle	
17		Ref	Keyswitch Options:	
17	4360469	1	Keyswitch ANSI/ANSI Export Spec	
17	4360470	1	Keyswitch CE/Australian Spec	
17	2860030	1	Key, Replacement (Fits All Specs)	
18	4360475	1	Switch, Emergency Stop	
18	7020175	1	Cap	
18	7020176	1	Block, Contact	
19	4360535	NLA	Module, Tilt (Use p/n 2915009)	
20	4922865	1	Harness, Control Box (See ELECTRICAL SECTION for Breakdown)	
21	4922866	1	Harness, Tilt Sensor (See ELECTRICAL SECTION for Breakdown)	
22	4061061	1	Shield	
23	4191303	3	Screw M3.5 x 6	
		Ref	**GROUND CONTROL BOX INSTALLATION**	
	0272810	Ref	**ANSI and ANSI Export Specs**	F
	0273443	Ref	**Australian Spec**	D

SECTION 2 - GROUND COMPONENTS

ITEM	PART NUMBER	QTY	DESCRIPTION	REV
	0272811	Ref	**CE Spec**	F
104	0700615	3	Bolt M6 x 35	
	0272878	Ref	**ANTI-VANDELISM PACKAGE INSTALLATION (NOT SHOWN)**	A
	1671124	1	Cover, Lockable Ground Control Box	

FIGURE 2-4. GROUND CONTROL ASSEMBLY AND INSTALLATION (SN 0200117805 through 0200135154, SN 1200001367 through 1200004293)

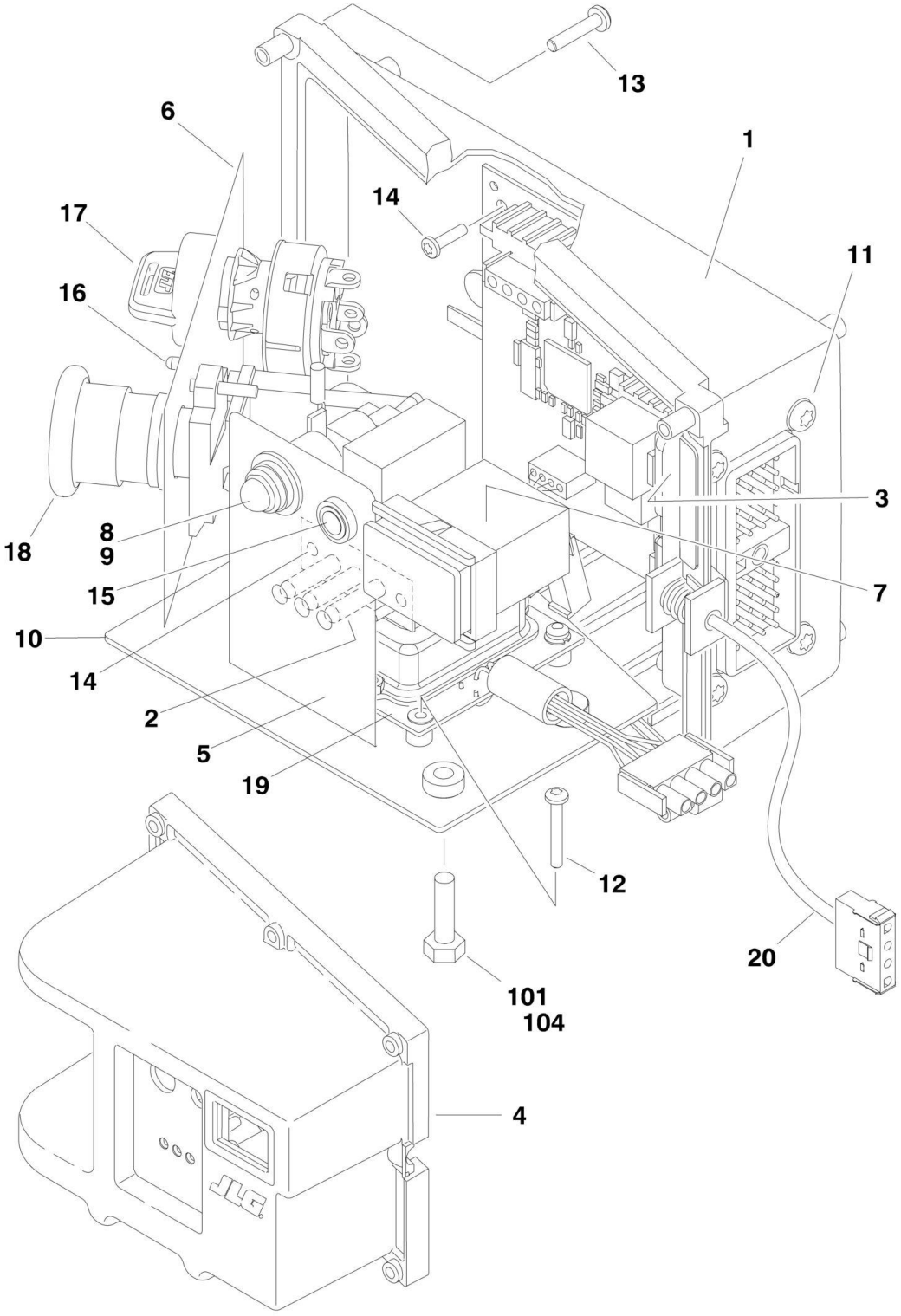

FIGURE 2-4. GROUND CONTROL ASSEMBLY AND INSTALLATION (SN 0200117805 through 0200135154, SN 1200001367 through 1200004293)

ITEM	PART NUMBER	QTY	DESCRIPTION	REV
		Ref	**GROUND CONTROL ASSEMBLY (USA BUILT MACHINES) (SN 0200117805 through 0200135154)**	
		Ref	**GROUND CONTROL ASSEMBLY (BELGIUM BUILT MACHINES) (SN 1200001367 through 1200004293)**	
	0272780	Ref	**ANSI and ANSI Export and UL Spec**	O
	0861669	Ref	**ANSI Export and Japanese Spec**	E
	0273444	Ref	**Australian Spec**	L
	0272781	Ref	**CE Spec**	O
1	0380025	1	Box, Ground Control	
2	0610161	1	Board, PC (Battery Charger LED)	
3		Ref	Board, PC (Ground Control) Options:	
		Ref	**Note: PC Board must be recalibrated when replaced.**	
3	0610164	NLA	Board, PC USA Built Machines (Use p/n 1600419) **(SN 0200117805 through 0200133155)**	
3	0610164	NLA	Board, PC Belgium Built Machines (Use p/n 1600419) **(SN 1200001367 through 1200003932)**	
3	1600419	1	Board, PC USA Built Machines **(SN 0200133156 through 0200135154)**	
3	1600419	1	Board, PC Belgium Built Machines **(SN 1200003933 through 1200004293)**	
3	2915039	1	Upgrade Kit (Includes Cables, Programming Instructions and CD Software) (Note: Use with p/n 1600419 PC Board. Must be Purchased Separately)	B
4	1671105	1	Cover, Front	
5		Ref	Decal - LED Options:	
5	1705696	1	Decal - LED ANSI/ANSI Export/Australian/UL Specs	
5	1705697	1	Decal - LED ANSI Export/Australian/CE/Japanese Specs	
6	1705698	1	Decal - Function	
7	2420172	1	Hourmeter	
8		Ref	Component Options:	
8	3520193	1	Plug (ANSI/ANSI Export/Australian/UL Specs)	
8	2920026	1	Lamp (ANSI Export/Australian/CE/Japanese Specs)	
9		Ref	Bulb Options:	
9	Not Required	0	Bulb ANSI/ANSI Export/Australian/UL Specs	
9	2920094	1	Bulb ANSI Export/Australian/CE/Japanese Specs	
10	4340739	1	Plate, Mounting	
11	3900336	4	Screw, Torx #10-32NF x 1/2in	
12	3900356	4	Screw, Torx M3.5 x 16	
13	3900338	6	Screw, Torx M4 x 20	
14	3900339	5	Screw, Plastite #6 x 1/2in	
15	4360069	1	Breaker, Circuit - 10 Amp	
16	4360328	1	Switch, Toggle	
17		Ref	Keyswitch Options:	
17	4360469	1	Keyswitch ANSI/ANSI Export/Japanese/UL Spec	
17	4360470	1	Keyswitch CE/Australian Specs	
17	2860030	1	Key, Replacement (Fits All Specs)	
18	4360475	1	Switch, Emergency Stop	
18	7020175	1	Cap	
18	7020176	1	Block, Contact	
19	4000006	NLA	Module, Tilt (Use p/n 1810140)	

SECTION 2 - GROUND COMPONENTS

ITEM	PART NUMBER	QTY	DESCRIPTION	REV
20	4922865	1	Harness, Control Box (See ELECTRICAL SECTION for Breakdown)	
		Ref	**GROUND CONTROL BOX INSTALLATION**	
	0272810	Ref	**ANSI and ANSI Export and UL Specs**	F
	0273966	Ref	**ANSI Export and Japanese Spec**	C
	0273443	Ref	**Australian Spec**	D
	0272811	Ref	**CE Spec**	F
101	0100011	AR	Compound, Locking (USA Built Machines) **(SN 0200117805 through 0200120587)**	
101	0100011	AR	Compound, Locking (Belgium Built Machines) **(SN 1200001367 through 1200001698)**	
104	0700615	3	Bolt M6 x 35	
	0272878	Ref	**ANTI-VANDELISM PACKAGE INSTALLATION (NOT SHOWN)**	A
	1671124	1	Cover, Lockable Ground Control Box	

FIGURE 2-5. BRAKE DISCONNECT/RELEASE AND MDI (MULTIFUNCTION DIGITAL INDICATOR) GAUGE INSTALLATIONS (OPTIONAL)

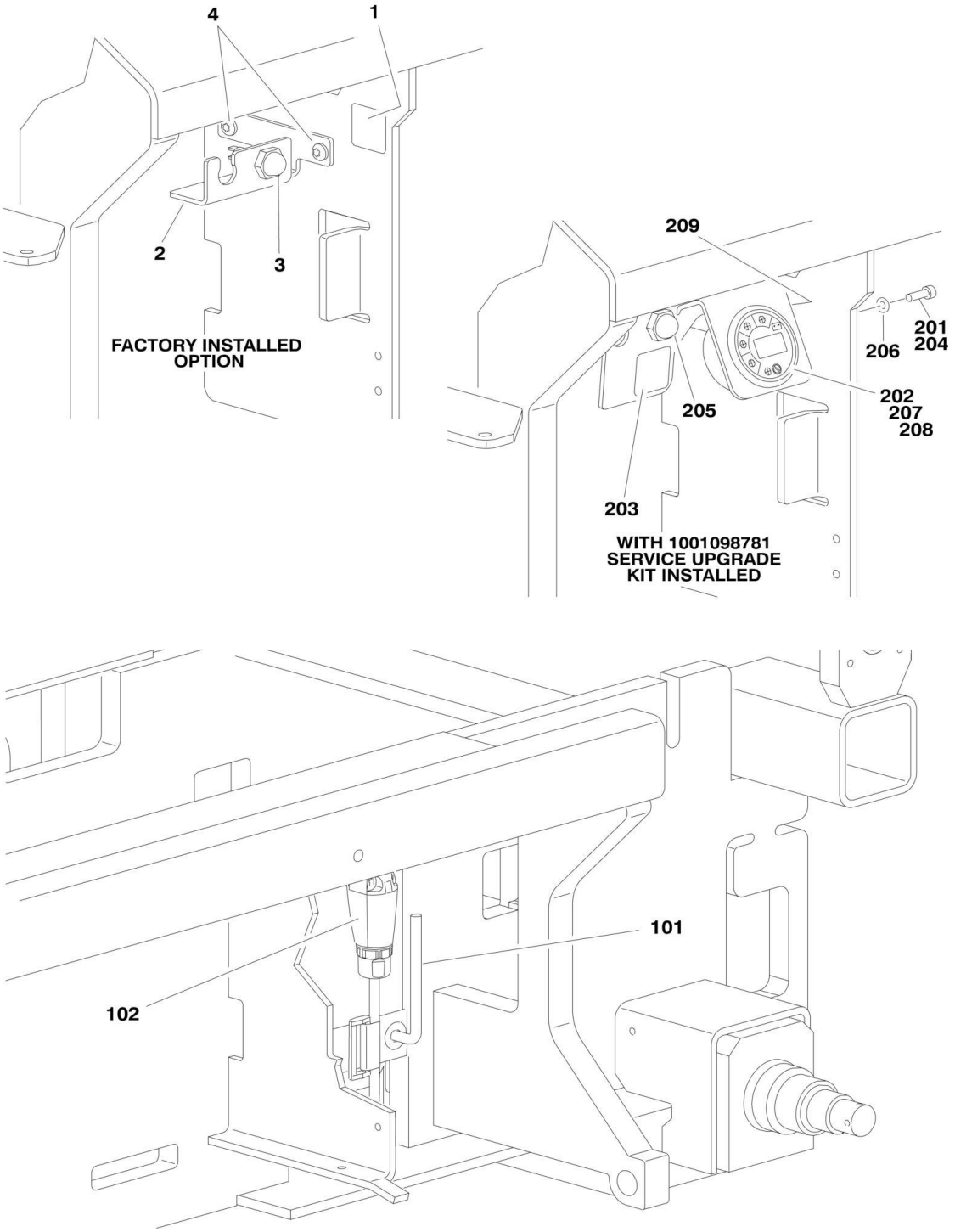

FIGURE 2-5. BRAKE DISCONNECT/RELEASE AND MDI (MULTIFUNCTION DIGITAL INDICATOR) GAUGE INSTALLATIONS (OPTIONAL)

ITEM	PART NUMBER	QTY	DESCRIPTION	REV
		Ref	**Note: Items 1-4 or 101 & 102 were factory installed options for machines with these SNs. Machines may be upgraded to include an MDI (Multifunction Digital Indicator) Gauge by installing p/n 1001098781 (Items 201- 210).**	
	0275603	Ref	**BRAKE RELEASE SWITCH INSTALLATION**	A
1	1706679	1	Decal - Brake Release	
2	0903598	1	Bracket	
3	4360387	1	Switch, Push Button	
4	4191706	2	Screw M6 x 12	
	0275432	Ref	**BRAKE RELEASE ONLY INSTALLATION**	A
101	2902331	1	Mount and Screw Kit	
102	4922944	1	Bracket Disconnect/Release Switch Assembly (See ELECTRICAL SECTION for Breakdown as Design May Vary)	
	1001098781	Ref	**MDI (MULTIFUNCTION DIGITAL INDICATOR) GAUGE AND BRAKE RELEASE SERVICE UPGRADE KIT**	A
201	0100011	AR	Compound, Locking	
202	0100048	AR	Grease, Dielectric	
203	1706679	1	Decal - Brake Release	
204	4031607	2	Capscrew M5 x 16	
205	4360387	1	Switch, Push Button	
206	4811600	2	Flatwasher M5	
207	1001092454	1	Gauge, MDI (Multifunction Digital Indicator)	
208	1001093556	1	MDI Harness (Not Shown - See ELECTRICAL SECTION for Breakdown)	
209	1001094203	1	Bracket	
210	1001094359	1	Decal - Troubleshooting (Not Shown - Located on Platform Placard Plate)	

SECTION 3 - SCISSORS ARMS

FIGURE 3-1. SCISSOR ARMS INSTALLATION - 1930ES

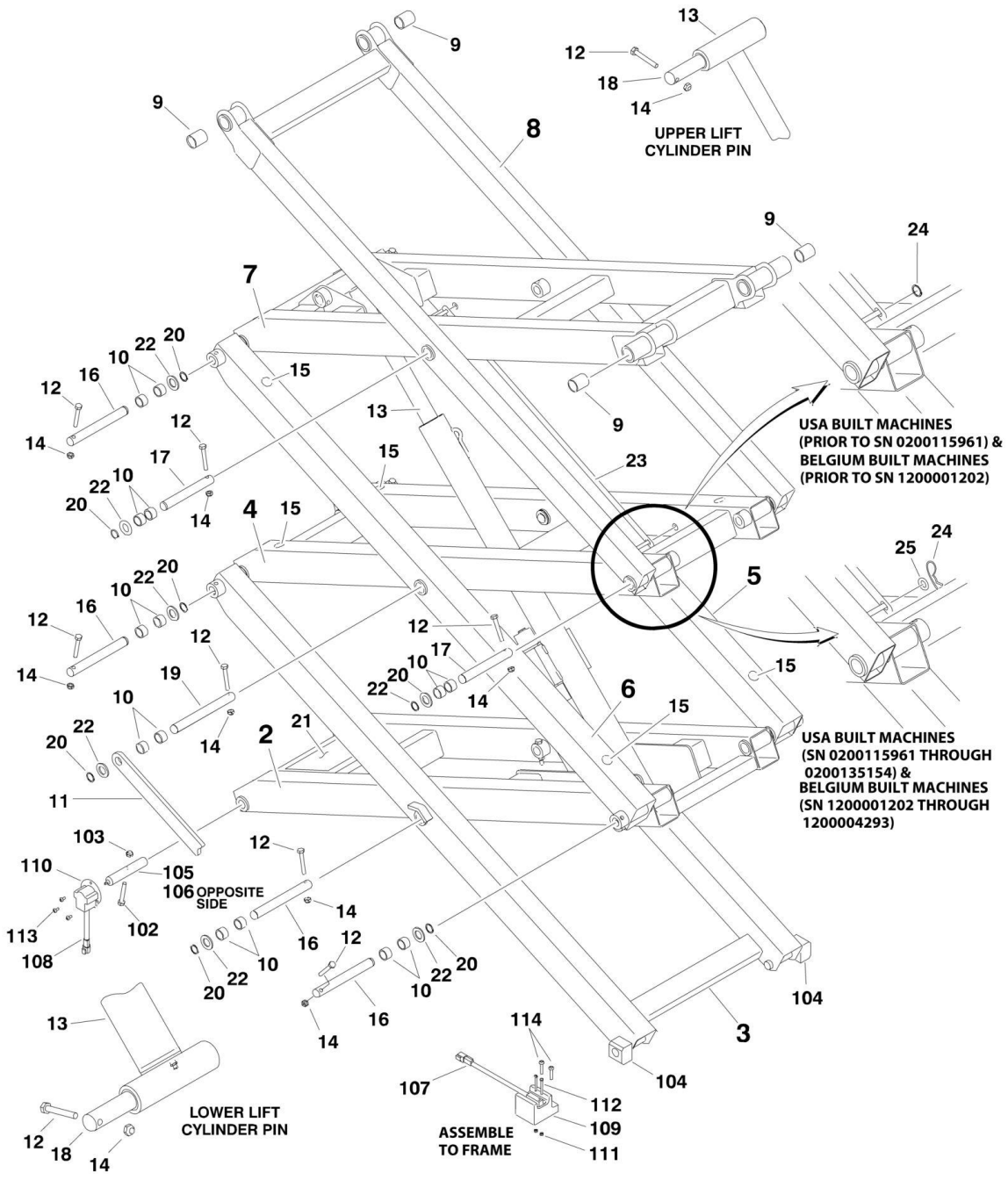

FIGURE 3-1. SCISSOR ARMS INSTALLATION - 1930ES

ITEM	PART NUMBER	QTY	DESCRIPTION	REV
	0272701	Ref	**SCISSOR ARMS ASSEMBLY - 1930ES**	M
2	0200809	1	Arm - Lower Inboard	
3	0200810	1	Arm - Lower Outboard	
4	0200811	1	Arm - Mid Inboard	
5	0200812	1	Arm - Mid Outboard (Left Side)	
6	0200813	1	Arm - Mid Outboard (Right Side)	
7	0200814	1	Arm - Upper Inboard	
8	0200815	1	Arm - Upper Outboard	
9	0440266	4	Bearing	
10	0440264	28	Bearing	
11	3574159	1	Prop, Safety	
12	0701022	16	Bolt M10 x 70	
13	1684265	1	Lift Cylinder Assembly (See CYLINDER SECTION for Breakdown)	
14	3291005	16	Locknut M10	
15	3340962	16	Pad	
16	3423031	9	Pin	
17	3423032	4	Pin	
18	3423038	2	Pin	
19	3423042	1	Pin	
20	3760115	14	Ring, Retaining	
21	4420070	AR	Tape, Anti-Skid (USA Built Machines) **(Prior to SN 0200115961)**	
21	4420070	AR	Tape, Anti-Skid (Belgium Built Machines) **(Prior to SN 1200001202)**	
22	4740531	15	Washer, Special	
23	1180381	NLA	Carrier, Cable (Use p/n 1180396)	
24	2080071	2	Ring, Fastener (USA Built Machines) **(Prior to SN 0200115961)**	
24	2080071	2	Ring, Fastener (Belgium Built Machines) **(Prior to SN 1200001202)**	
24	3420156	2	Pin, Cotter (USA Built Machines) **(SN 0200115961 through 0200135154)**	
24	3420156	2	Pin, Cotter (Belgium Built Machines) **(SN 1200001202 through 1200004293)**	
25	4812000	2	Washer M10	
	2902242	1	Arms Kit - 1930ES (Includes Items 2-11 & 23)	P
	0272735	Ref	**SCISSOR ARMS INSTALLATIONS - 1930ES**	E
102	0701020	2	Bolt M10 x 60	
103	3291005	2	Locknut M10	
104	3340964	2	Pad, Slide	
105	3423030	1	Pin, Sensor	
106	3423033	1	Pin	
107	4360502	1	Switch, Proximity Sensor	
108	4360526	NLA	Switch, Rotary Angle Sensor (Use p/n 1001092354)	
109	3200453	1	Mount, Switch	
110	3200454	1	Mount, Switch	
111	3300474	2	Locknut M4	
112	3900334	2	Screw M4	
113	4191708	3	Screw M6 x 12	
114	4191709	2	Screw M6 x 25	
115	1061036	1	Cable, Manual Descent (Not Shown)	
115	7020218	1	T-Handle (With 1/4in-20 Threads)	

SECTION 3 - SCISSORS ARMS

ITEM	PART NUMBER	QTY	DESCRIPTION	REV
115	70001878	1	T-Handle (With 5mm Threads)	
116	3321402	1	Jam Nut 1/4in-28NF (Not Shown)	
117	4160078	1	Spring, Compression (Not Shown)	
118	4420070	2	Tape, Anti-Skid (Not Shown)	

FIGURE 3-2. SCISSOR ARMS INSTALLATION - 2030ES

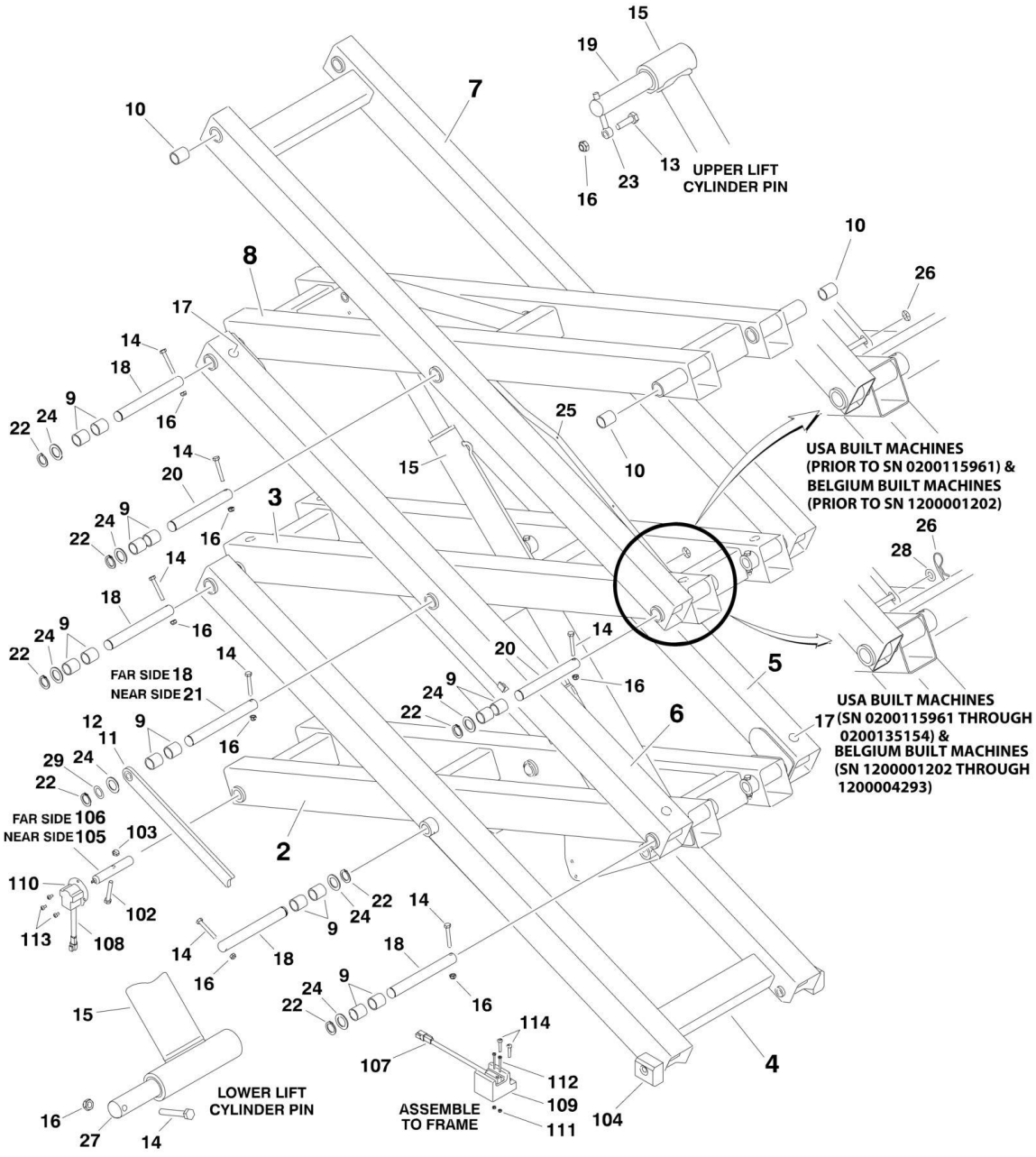

FIGURE 3-2. SCISSOR ARMS INSTALLATION - 2030ES

ITEM	PART NUMBER	QTY	DESCRIPTION	REV
	0272729	Ref	**SCISSOR ARMS INSTALLATION - 2030ES**	L
2	0200798	1	Arm - Lower Inboard	
3	0200799	1	Arm - Mid Inboard	
4	0200802	1	Arm - Lower Outboard	
5	0200803	1	Arm - Mid Outboard (Left Side)	
6	0200804	1	Arm - Mid Outboard (Right Side)	
7	0200807	1	Arm - Upper Outboard	
8	0200816	1	Arm - Upper Inboard	
9	0962006	28	Bearing	
10	0440267	4	Bearing	
11	0440266	1	Bearing	
12	3574161	1	Bar, Prop Attach	
13	0701015	1	Bolt M10 x 35	
14	0701022	15	Bolt M10 x 70	
15	1684258	1	Lift Cylinder Assembly (See CYLINDER SECTION for Breakdown)	
16	3291005	16	Locknut M10	
17	3340962	16	Pad, Arm	
18	3422997	9	Pin	
19	3422998	1	Pin (Use p/n 3423067)	
20	3423036	4	Pin	
21	3423014	1	Pin	
22	3760387	14	Ring, Retaining	
23	3841143	1	Keeper, Pin	
24	4740438	14	Washer, Special	
25	1180382	1	Carrier, Cable	
26	2080071	2	Ring, Fastener (USA Built Machines) **(Prior to SN 0200115961)**	
26	2080071	2	Ring, Fastener (Belgium Built Machines) **(Prior to SN 1200001202)**	
26	3420156	2	Pin, Cotter (USA Built Machines) **(SN 0200115961 through 0200135154)**	
26	3420156	2	Pin, Cotter (Belgium Built Machines) **(SN 1200001202 through 1200004293)**	
27	3423038	1	Pin	
28	4812000	2	Washer M10	
29	4071094	AR	Shim, Spacer	
	2902241	1	Scissor Arm Kit - 2030ES (Includes Items 2-10,12 & 25)	N
	0272730	Ref	**LIMIT SWITCHES INSTALLATION**	C
102	0701022	2	Bolt M10 x 70	
103	3291005	2	Locknut M10	
104	3340957	2	Pad, Slide	
105	3423016	1	Pin	
106	3423017	1	Pin	
107	4360502	1	Switch, Proximity Sensor	
108	4360526	1	Switch, Rotary Angle Sensor (Use p/n 1001092354)	
109	3200453	1	Mount, Switch	
110	3200454	1	Mount, Switch	
111	3300474	2	Locknut M4	
112	3900334	2	Screw M4	
113	4191706	3	Screw M6 x 12	
114	4191709	2	Screw M6 x 25	

FIGURE 3-3. SCISSOR ARMS INSTALLATION - 2630ES

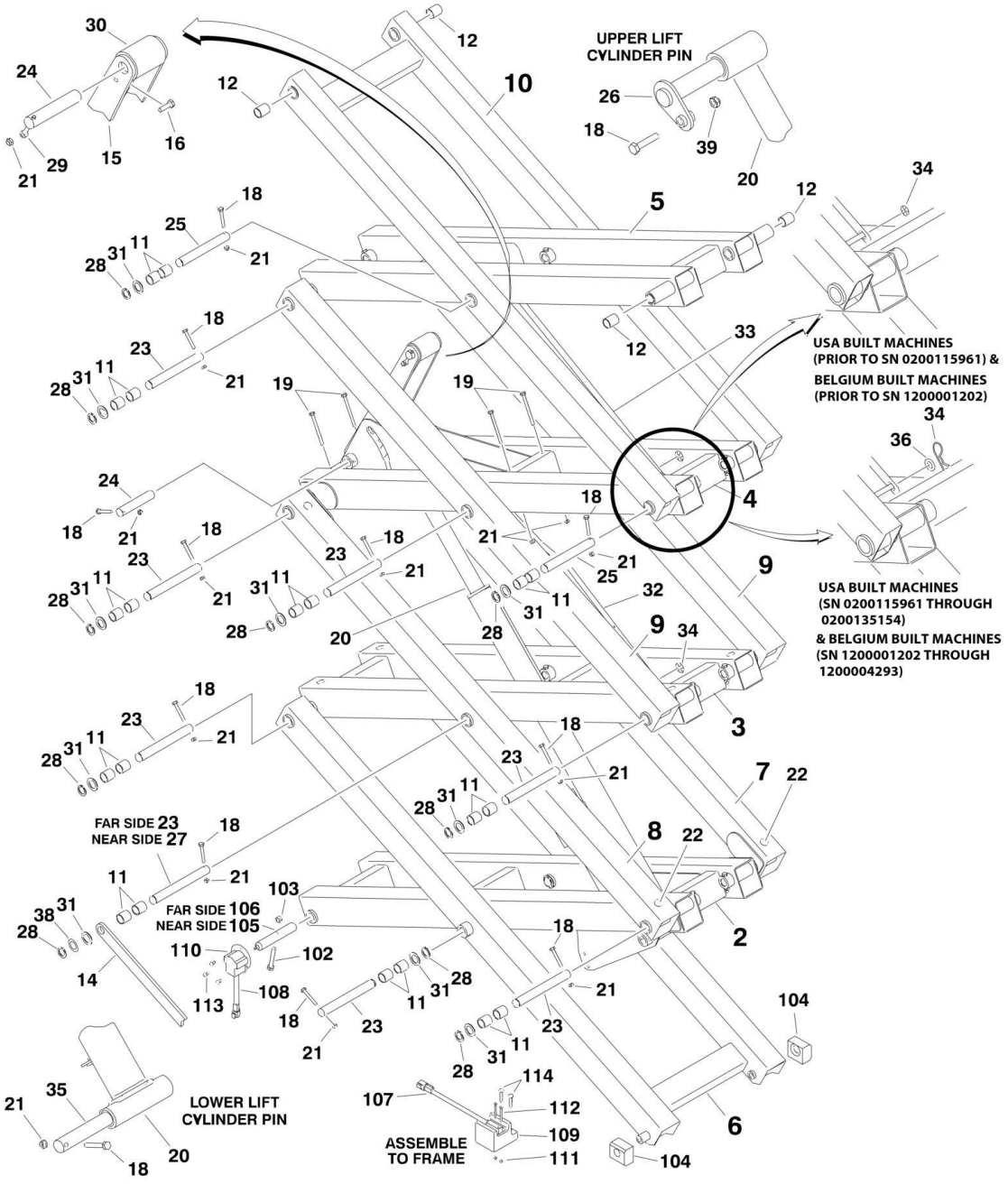

FIGURE 3-3. SCISSOR ARMS INSTALLATION - 2630ES

ITEM	PART NUMBER	QTY	DESCRIPTION	REV
	0272728	Ref	**SCISSOR ARMS INSTALLATIONS - 2630ES**	M
2	0200798	1	Arm - Lower Inboard	
3	0200799	1	Arm - Lower Mid Inboard	
4	0200800	1	Arm - Upper Mid Inboard	
5	0200801	1	Arm - Upper Inboard	
6	0200802	1	Arm - Lower Outboard	
7	0200803	1	Arm - Lower Mid Outboard (Left Side)	
8	0200804	1	Arm - Lower Mid Outboard (Right Side)	
9	0200805	2	Arm - Upper Mid Outboard	
10	0200807	1	Arm - Upper Outboard	
11	0440267	42	Bearing	
12	0440266	4	Bearing	
14	3574161	1	Bar, Prop Attach	
15	4846752	1	Kicker, Arm	
16	0701015	1	Bolt M10 x 35	
17	0701018	1	Bolt M10 x 50	
18	0701022	18	Bolt M10 x 70	
19	0701029	4	Bolt M10 x 120	
20	1684302	1	Lift Cylinder Assembly (See ELECTRICAL SECTION for Breakdown)	
21	3291005	23	Locknut M10	
22	3340962	24	Pad, Arm	
23	3422997	15	Pin	
24	3422998	1	Pin	
25	3423036	4	Pin	
26	3423039	1	Pin	
27	3423014	1	Pin	
28	3760387	20	Ring, Retaining	
29	3841143	1	Keeper, Pin	
30	3860107	1	Roller	
31	4740438	20	Washer, Special	
32	1180382	1	Carrier, Cable	
33	1180383	1	Carrier, Cable	
34	2080071	4	Ring, Fastener (USA Built Machines) **(Prior to SN 0200115961)**	
34	2080071	4	Ring, Fastener (Belgium Built Machines) **(Prior to SN 1200001202)**	
34	3420156	4	Pin, Cotter (USA Built Machines) **(SN 0200115961 through 0200135154)**	
34	3420156	4	Pin, Cotter (Belgium Built Machines) **(SN 1200001202 through 1200004293)**	
35	3423038	1	Pin	
36	4812000	2	Washer M10	
37	3423067		Pin (Not Shown)	
38	4071094	1	Shim, Spacer	
39	3291007	1	Locknut M10	
	2902240	1	Scissor Arm Kit - 2630ES (Includes Items 2-12, 14, 15, 32 & 33)	O
	0272608	Ref	**LIMIT SWITCHES INSTALLATION**	C
102	0701022	2	Bolt M10 x 70	
103	3291005	2	Locknut M10	
104	3340957	2	Pad, Slide	

SECTION 3 - SCISSORS ARMS

ITEM	PART NUMBER	QTY	DESCRIPTION	REV
105	3423016	1	Pin	
106	3423017	1	Pin	
107	4360502	1	Switch, Proximity Sensor	
108	4360526	NLA	Switch, Rotary Angle Sensor (Use p/n 1001092354)	
109	3200453	1	Mount, Switch	
110	3200454	1	Mount, Switch	
111	3300474	2	Locknut M4	
112	3900334	2	Screw M4	
113	4191706	3	Screw M6 x 12	
114	4191709	2	Screw M6 x 25	

FIGURE 3-4. SCISSOR ARMS INSTALLATION - 2646ES/3246ES

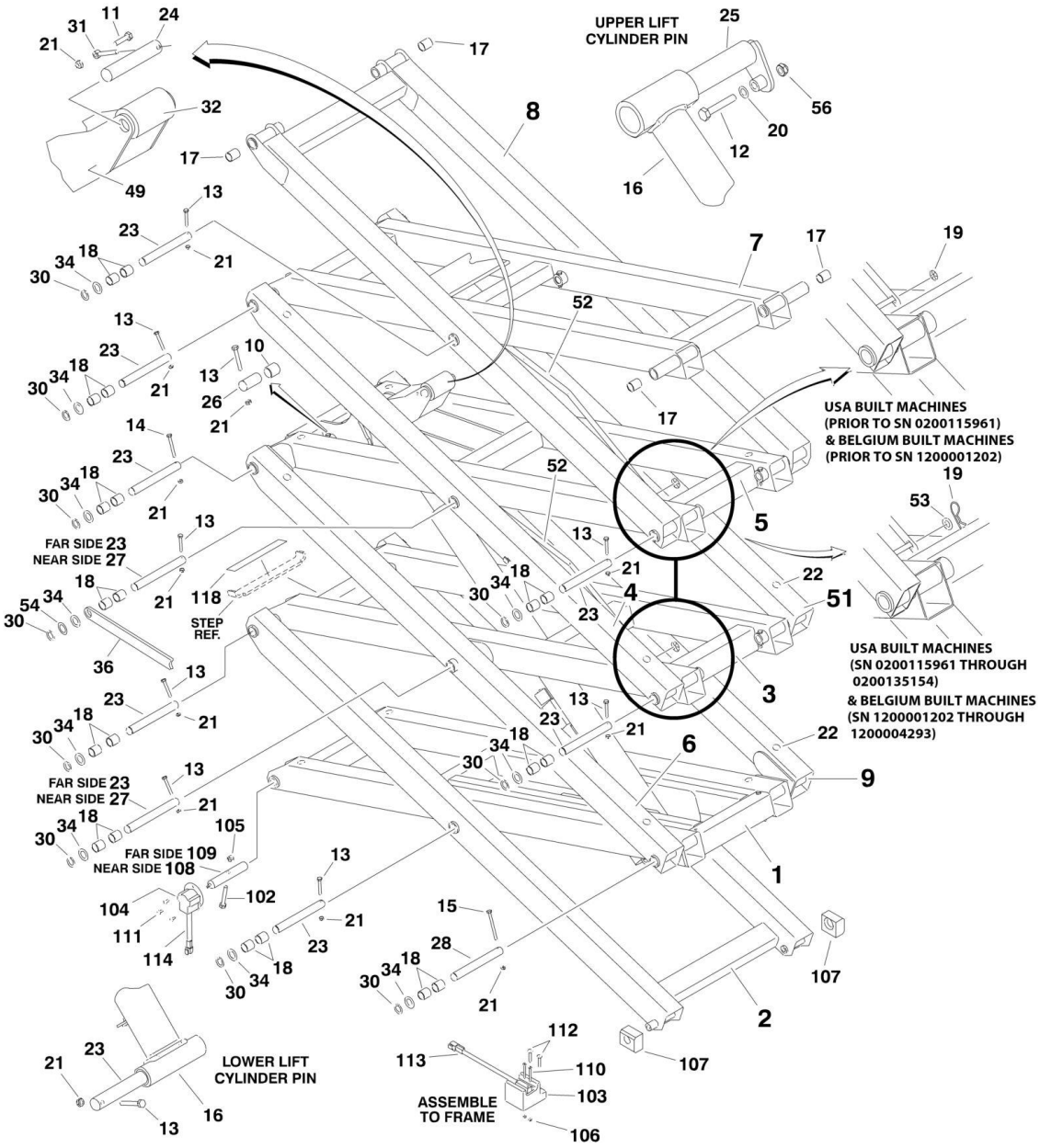

FIGURE 3-4. SCISSOR ARMS INSTALLATION - 2646ES/3246ES

ITEM	PART NUMBER	QTY	DESCRIPTION	REV
		Ref	**SCISSOR ARMS ASSEMBLIES - 2646ES/3246ES**	
	0272929	Ref	**Scissor Arms Assemblies 2646ES**	M
	0272928	Ref	**Scissor Arms Assemblies 3246ES**	M
1	0200782	1	Arm - Lower Inboard	
2	0200783	1	Arm - Lower Outboard	
3	0200784	1	Arm - Lower Mid Inboard	
4	0200785	1	Arm - Upper Mid Outboard (Right Side)	
5	0200786	1	Arm - Upper Mid Inboard	
6	0200787	1	Arm - Lower Mid Outboard (Right Side)	
7	0200788	1	Arm - Upper Inboard	
8	0200789	1	Arm - Upper Outboard	
9	0200808	1	Arm - Lower Mid Outboard (Left Side)	
10	0440257	2	Bearing	
11	0701016	1	Bolt M10 x 40	
12	0701020	1	Bolt M10 x 60	
13	0701022	19	Bolt M10 x 70	
14	0701027	2	Bolt M10 x 100	
15	0701029	2	Bolt M10 x 120	
16		Ref	Lift Cylinder Assembly Options (See CYLINDER SECTION for Breakdown):	
16	1684260	1	Lift Cylinder Assembly 2646ES	
16	1684257	1	Lift Cylinder Assembly 3246ES	
17	0962155	4	Bearing	
18	0962006	40	Bearing	
19	2080071	AR	Ring, Fastener (USA Built Machines) **(Prior to SN 0200115961)**	
19	2080071	AR	Ring, Fastener (Belgium Built Machines) **(Prior to SN 1200001202)**	
19	3420156	4	Pin, Cotter (USA Built Machines) **(SN 0200115961 through 0200135154)**	
19	3420156	4	Pin, Cotter (Belgium Built Machines) **(SN 1200001202 through 1200004293)**	
20	4812000	1	Flatwasher M10 (Note: Used as a Shim when Head of p/n 3423009 Pin Rubs Item 49 Kicker)	
21	3291005	24	Locknut M10	
22	3340962	24	Pad, Arm	
23	3422997	17	Pin	
24	3422998	1	Pin	
25	3423009	1	Pin	
26	3423011	2	Pin	
27	3423014	1	Pin	
28	3423026	2	Pin	
30	3760387	20	Ring, Retaining	
31	3841143	1	Keeper, Pin	
32	3860104	1	Roller	
33	4420070	AR	Tape, Anti-Skid (USA Built Machines) **(Prior to SN 0200115961)**	
33	4420070	AR	Tape, Anti-Skid (Belgium Built Machines) **(Including 1200001202)**	
34	4740438	20	Washer, Special	
36	3574161	1	Prop, Safety	
49	4846684	1	Kicker, Arm	
51	0200817	1	Arm - Upper Mid Outboard (Left Side)	

SECTION 3 - SCISSORS ARMS

ITEM	PART NUMBER	QTY	DESCRIPTION	REV
52	1180380	2	Carrier, Cable	
53	4812000	2	Washer, 10mm	
54	4071094	AR	Shim, Spacer	
55	3423170	1	Pin	
56	3291007	1	Locknut M10	
	2902236	1	Scissor Arm Kit - 2646ES/3246ES (Includes Items 1-10, 17, 18, 36, 49, 51 & 52)	L
		Ref	**SCISSOR ARMS INSTALLATIONS - 2646ES/3246ES**	
	0272623	Ref	**Scissor Arms Installations 2646ES**	D
	0272622	Ref	**Scissor Arms Installations 3246ES**	D
102	0701022	2	Bolt M10 x 70	
103	3200453	1	Mount, Switch	
104	3200454	1	Mount, Switch	
105	3291005	2	Locknut M10	
106	3300474	2	Locknut M4	
107	3340957	2	Pad, Slide	
108	3423016	1	Pin, Sensor	
109	3423017	1	Pin	
110	3900334	2	Screw M4	
111	4191706	3	Screw M6 x 12	
112	4191709	2	Screw M6 x 25	
113	4360502	1	Switch, Proximity Sensor	
114	4360526	NLA	Switch, Rotary Angle Sensor (Use p/n 1001092354)	
118	4420070	2	Tape, Anti-Skid	

SECTION 4 - PLATFORM

FIGURE 4-1. PLATFORM INSTALLATION

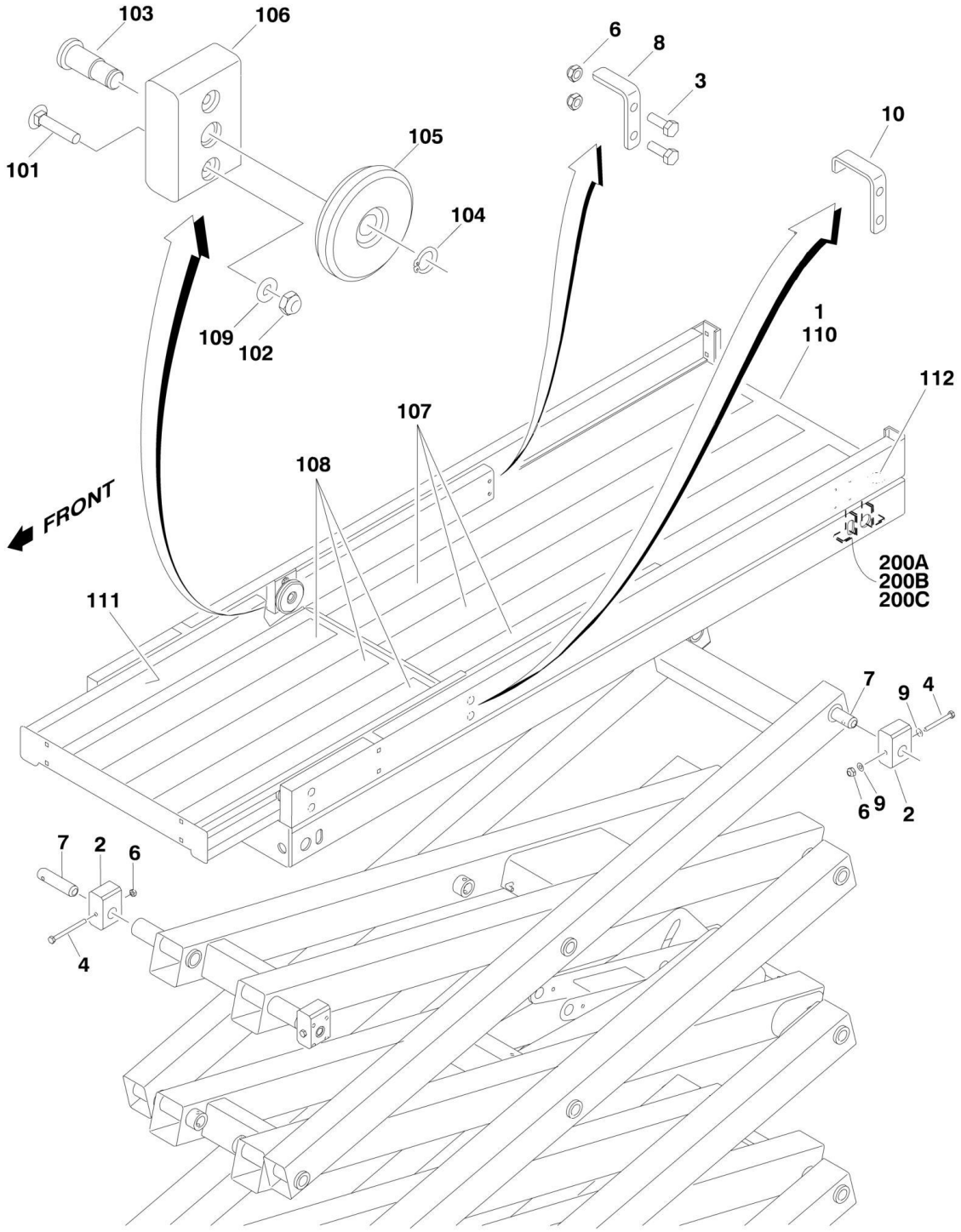

FIGURE 4-1. PLATFORM INSTALLATION

ITEM	PART NUMBER	QTY	DESCRIPTION	REV
		Ref	**PLATFORM INSTALLATIONS**	
		Ref	**All Specs except CE and Japanese Specs**	
	0272633	Ref	**Platform Installations 1930ES (Original Equipment)**	E
	1001134933	Ref	**Platform Installations 1930ES (Service Replacement)**	A
	0272666	Ref	**Platform Installations 2030ES/2630ES**	E
	0272698	Ref	**Platform Installations 2646ES/3246ES**	E
		Ref	**CE and Japanese Specs Only**	
	0272836	Ref	**Platform Installations 1930ES**	K
	0272837	Ref	**Platform Installations 2030ES/2630ES**	L
	0272838	Ref	**Platform Installations 2646ES/3246ES**	K
		Ref	**Note: All versions are available on ANSI Export Spec.**	
1		Ref	Platform Assembly (See Items 101-112 for Breakdown):	
1	0272637	NLA	Platform Assembly 1930ES (Use p/n 1001134934)	
1	0272661	1	Platform Assembly 2030ES/2630ES	
1	0272696	1	Platform Assembly 2646ES/3246ES	
2		Ref	Block, Slide Options:	
2	3340976	2	Block, Slide 1930ES (Front Block)	
2	3340965	2	Block, Slide 1930ES (Rear Block)	
2	1001134951	2	Block, Slide 1930ES (Spacer Sleeve Used with Rear Block) (Service Replacement Platforms Only)	
	0561520	4	Block, Slide 2030ES/2630ES/2646ES/3246ES	
3	3900351	4	Bolt M10 x 30	
4		Ref	Bolt M10 Options:	
4	0701022	2	Bolt 70mm Length (Front Slide Block - 1930ES)	
4	0701026	2	Bolt 90mm Length (Rear Slide Block - 1930ES)	
4	0701029	2	Bolt 120mm Length (Rear Slide Block - 1930ES) (Service Replacement Platform Only)	
4	0701024	2	Bolt 80mm Length (Front Slide Block - 2030ES/2630ES/2646ES/3246ES)	
4	0701027	2	Bolt 100mm Length (Rear Slide Block - 2030ES/2630ES/2646ES/3246ES)	
6	3291005	8	Locknut M10	
7		Ref	Pin Options:	
7	3423049	4	Pin All Machines except CE and Japanese Specs	
7	See Note	4	Pin CE and Japanese Spec Machines (Note: Refer to JLG Supplement p/n 3124288)	
8	3574067	2	Plate, Extension Stop	
9	4812000	4	Flatwasher M10	
10		Ref	Bracket, Platform Containment Options:	
10	0903579	2	Bracket (Standard on 2646ES/3246ES Only)	
10	9984279	1	Service Kit to Install Brackets (Includes qty 2 p/n 0903579 Brackets and Instructions) (Suggested installation on ALL ES models USA Built Machines and on ALL ES models Belgium Built Machines) **(SN 0200127552 through 0200135154)**	
10	9984279	1	Service Kit to Install Brackets (Includes qty 2 p/n 0903579 Brackets and Instructions) (Suggested installation on ALL ES models Belgium Built Machines) **(SN 1200003021 through 1200004293)**	
		Ref	**PLATFORM ASSEMBLY**	
	0272637	1	**Platform Assembly 1930ES (Original Equipment)**	E
	1001134934	Ref	**Platform Assembly 1930ES (Service Replacement)**	A
	0272661	Ref	**Platform Assembly 2030ES/2630ES**	E

ITEM	PART NUMBER	QTY	DESCRIPTION	REV
	0272696	Ref	**Platform Assembly 2646ES/3246ES**	F
101	0630565	8	Bolt, Carriage M10 x 50	
102	3291005	8	Locknut M10	
103	3423013	4	Pin (USA Built Machines) **(Prior to SN 0200127552)**	
103	3423013	1	Pin (Belgium Built Machines) **(Prior to SN 1200003021)**	
104	3760348	4	Ring, Retaining (USA Built Machines) **(Prior to SN 0200127552)**	
104	3760348	1	Ring, Retaining (Belgium Built Machines) **(Prior to SN 1200003021)**	
105		Ref	Roller Options:	
105	3860110	4	Roller USA Built Machines **(Prior to SN 0200127552)**	
105	3860110	1	Roller Belgium Built Machines, Belgium Built Machines **(Prior to SN 1200003021)**	
105	3860118	4	Roller USA Built Machines **(SN 0200127552 through 0200135154)**	
105	3860118	1	Roller Belgium Built Machines **(SN 1200003021 through 1200004293)**	
106		Ref	Spacer/Mount Options:	
106	3860106	4	Spacer/Mount USA Built Machines **(Prior to SN 0200127552)**	
106	3860106	1	Spacer/Mount Belgium Built Machines **(Prior to SN 1200003021)**	
106	4340914	4	Spacer/Mount USA Built Machines **(SN 0200127552 through 0200135154)**	
106	4340914	1	Spacer/Mount Belgium Built Machines **(SN 1200003021 through 1200004293)**	
107		Ref	Tape, Anti-Skid Options:	
107	4420071	3	Tape, Anti-Skid 1930ES	
107	4420075	3	Tape, Anti-Skid 2030ES/2630ES	
107	4420073	5	Tape, Anti-Skid 2646ES/3246ES	
108		Ref	Tape, Anti-Skid Options:	
108	4420072	3	Tape, Anti-Skid 1930ES/2030ES/2630ES	
108	4420074	5	Tape, Anti-Skid 2646ES/3246ES	
109	4812000	8	Flatwasher M10	
110		Ref	Platform Weldment Options:	
110	4846766	NLA	Platform Weldment 1930ES (Use p/n 1001134935)	
110	4846789	1	Platform Weldment 2030ES/2630ES	
110	4846761	1	Platform Weldment 2646ES/3246ES	
111		Ref	Extension Weldment Options:	
111	4846768	1	Extension Weldment 1930ES/2030ES/2630ES	
111	4846764	1	Extension Weldment 2646ES/3246ES	
112		Ref	Grommet Options:	
112	2540043	1	Grommet USA Built Machines **(Prior to SN 0200132206)**	
112	2540043	1	Grommet Belgium Built Machines **(Prior to SN 1200003748)**	
112	2540045	1	Grommet USA Built Machines **(SN 0200132206 through 0200135154)**	
112	2540045	1	Grommet Belgium Built Machines **(SN 1200003748 through 1200004293)**	
		Ref	**SLIDE BLOCK MOUNT REPAIR KITS**	
200		Ref	Fixed Mount Repair Kit (Kit includes components and instructions to repair weld cracks in fixed mounting block supports on aluminum platforms)	
200A	2915241	1	1930ES Fixed Mount Repair Kit	
200B	2915240	1	2030ES/2630ES Fixed Mount Repair Kit	
200C	2915241	1	2646ES/3246ES Fixed Mount Repair Kit	

FIGURE 4-2. RAIL (FIXED) INSTALLATION - 1930ES

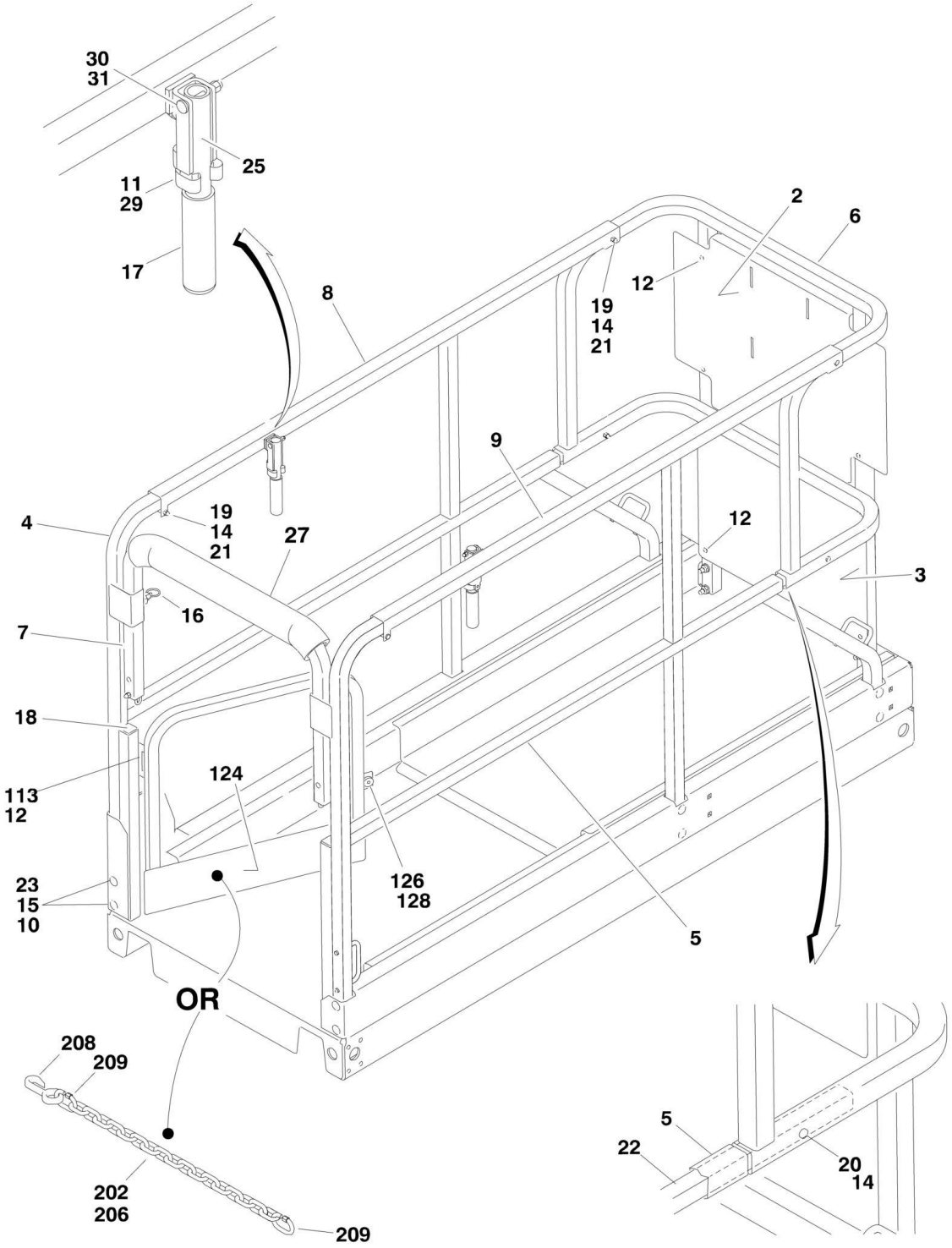

FIGURE 4-2. RAIL (FIXED) INSTALLATION - 1930ES

ITEM	PART NUMBER	QTY	DESCRIPTION	REV
		Ref	**RAIL INSTALLATION - 1930ES**	
	0272611	Ref	**Rails with Gate Closure**	H
	0272910	Ref	**Rails with Chain Closure**	E
2	3574183	1	Plate, Billboard (Upper)	
3	3574184	1	Plate, Billboard (Lower)	
4	3641480	1	Rail, Side (Left)	
5	3641481	1	Rail, Side (Right)	
6	3641482	1	Rail, Extension Platform (Front)	
7	4568645	1	Rail (Rear)	
8	4846784	1	Rail, Slide (Left)	
9	4846785	1	Rail, Slide (Right)	
10	0630565	16	Bolt, Carriage M10 x 55	
11	1380132	2	Clip, Gripper	
12	2080040	AR	Fastener, Huck	
14	3290606	AR	Capnut M6	
15	3291005	16	Locknut M10	
16	3423047	NLA	Pin, Plunger (Use p/n 3423151)	
17	2560088	2	Cover, Handle	
18	3520072	2	Cap-Plug	
19	3860111	2	Roller	
20	4010616	AR	Screw M6 x 40	
21	4010617	4	Screw M6 x 45	
22	4568631	NLA	Extension, Midrail (Use p/n 3841649)	
23	4812000	16	Flatwasher M10	
25	4846786	2	Handle, Extension	
27	3340612	18 in /46cm	Pad, Rail	
29	3820019	2	Rivet	
30	3900345	2	Screw M8 x 45	
31	3290806	2	Capnut M8	
		Ref	Rails Kit - 1930ES Options:	
	2902249	1	Rail Kit (USA Built Machines) (Includes Items 2-9 & 25) **(Prior to SN 0200124833)**	J
	2902249	1	Rail Kit (Belgium Built Machines) (Includes Items 2-9 & 25) **(Prior to SN 1200002342)**	J
	2902391	1	Rails with Gate Closure - (Includes Items 2-9, 11, 14, 16,17, 19, 24-25, 27-31 & 124) (USA Built Machines) **(SN 0200124833 through 0200135154)**	F
	2902391	1	Rails with Gate Closure - (Includes Items 2-9, 11, 14, 16,17, 19, 24-25, 27-31 & 124) (Belgium Built Machines) **(SN 1200002342 through 1200004293)**	F
	2902392	1	Rails with Chain Closure - (Includes Items 2-9, 11, 14, 16, 17, 19, 25, & 27-31) (USA Built Machines) **(SN 0200124833 through 0200135154)**	F
	2902392	1	Rails with Chain Closure - (Includes Items 2-9, 11, 14, 16, 17, 19, 25, & 27-31) (Belgium Built Machines) **(SN 1200002342 through 1200004293)**	F
	0272611	Ref	**GATE CLOSURE COMPONENTS**	J
113	2600281	2	Hinge	
124	4846723	1	Gate	
126	3080006	NLA	Magnet, Gate (Use p/n 3080007)	
128	3820016	1	Rivet (USA Built Machines) **(Prior to SN 0200125355)**	

ITEM	PART NUMBER	QTY	DESCRIPTION	REV
128	3820016	1	Rivet (USA Built Machines) **(Prior to SN 1200002342)**	
	0272910	Ref	**CHAIN CLOSURE COMPONENTS**	G
202	1260136	2 ft/61cm	Chain	
206	2820097	2 ft/61cm	Cover, Chain	
208	2940064	NLA	Snap Latch (Use p/n 1001101076 - Includes Item 209)	
209	3010088	2	Link	

FIGURE 4-3. RAIL (FOLD-DOWN) INSTALLATION - 1930ES

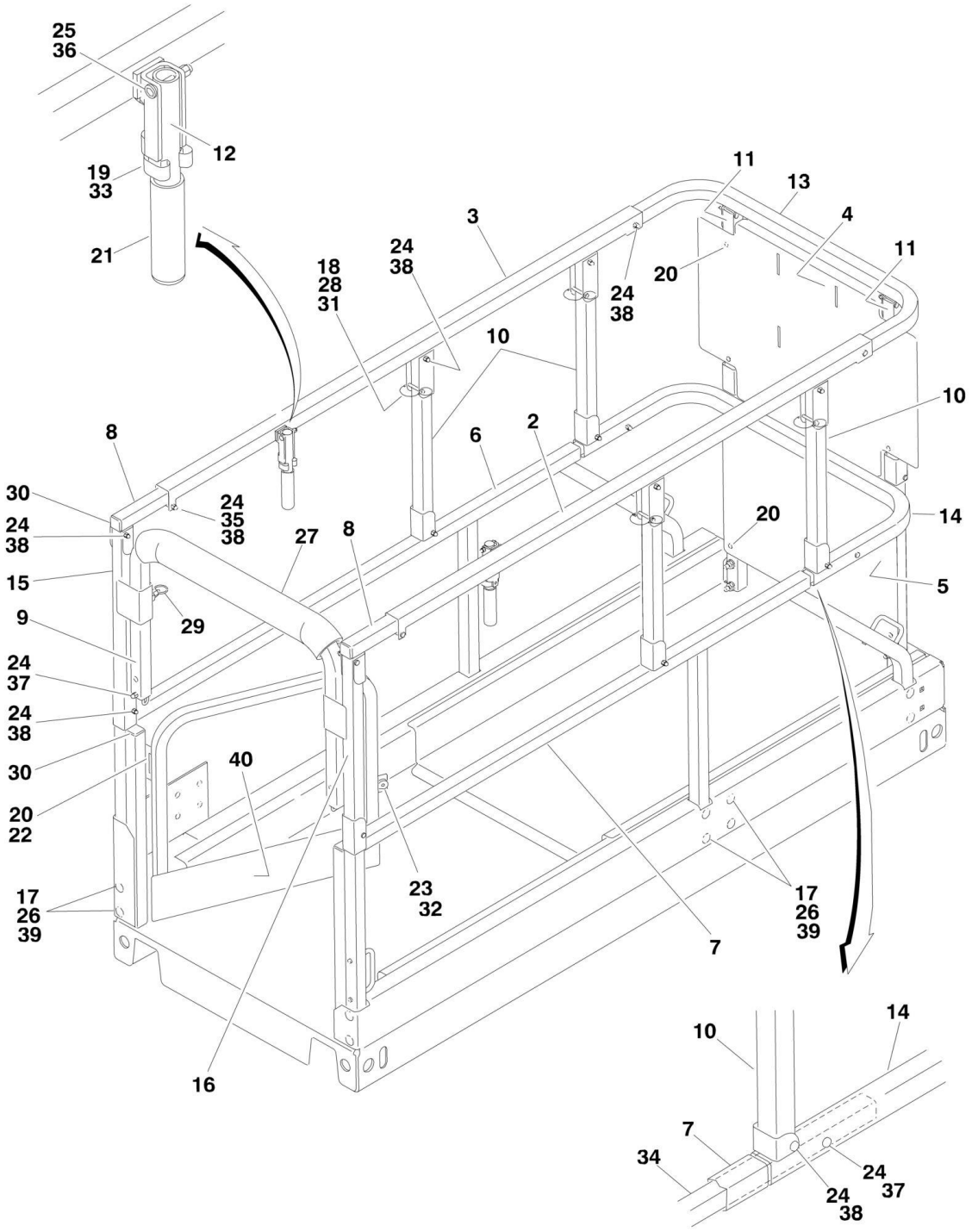

FIGURE 4-3. RAIL (FOLD-DOWN) INSTALLATION - 1930ES

ITEM	PART NUMBER	QTY	DESCRIPTION	REV
		Ref	**RAIL INSTALLATION - 1930ES**	
	0273479	Ref	**Rails with Gate Closure**	F
2	1271571	1	Rail, Slide (Right)	
3	1271572	1	Rail, Slide (Left)	
4	3574183	1	Plate, Billboard (Upper)	
5	3574184	1	Plate, Billboard (Lower)	
6	3641534	1	Rail (Left Lower Side)	
7	3641535	1	Rail (Right Lower Side)	
8	3641536	2	Rail (Both Upper Sides)	
9	4568645	1	Rail (Rear Upper)	
10	4568667	4	Tube, Folding (Side)	
11	4568711	2	Tube, Folding (Front)	
12	4846786	2	Handle, Extension	
13	4846794	1	Rail (Front Upper)	
14	4846795	1	Rail (Front Mid)	
15	4846796	1	Tube, Folding (Left Rear)	
16	4846797	1	Tube, Folding (Right Rear)	
17	0630565	16	Bolt, Carriage M10 x 55	
18	1060379	NLA	Lanyard (Use Item 28)	
19	1380132	2	Clip, Gripper	
20	2080040	16	Fastener, Huck	
21	2560088	2	Cover, Handle	
22	2600281	2	Hinge	
23	3080006	NLA	Magnet, Gate (Use p/n 3080007)	
24	3290606	AR	Capnut M6	
25	3290806	2	Capnut M8	
26	3291005	16	Capnut M10	
27	3340612	18 in /46cm	Pad, Rail	
28	3421453	NLA	Pin (Use p/n 3423278)	
29	3423047	NLA	Pin, Plunger (Use p/n 3423151)	
30	3520072	4	Cap-Plug	
31	3760170	4	Ring, Split	
32	3820016	1	Rivet (USA Built Machines) **(Prior to SN 0200125355)**	
32	3820016	1	Rivet (Belgium Built Machines) **(Prior to SN 1200002342)**	
33	3820019	2	Rivet	
34	3841649	2	Tube, Slide (Mid)	
35	3860111	2	Roller	
36	3900345	2	Capscrew M8 x 45	
37	4010616	AR	Screw M6 x 40	
38	4010617	20	Screw M6 x 45	
39	4812000	16	Flatwasher M10	
40	4846723	1	Gate	
		Ref	Rails Kit - 1930ES Options:	
	2902294	1	Rail Kit (Includes Items 2-16) (USA Built Machines) **(Prior to SN 0200124833)**	E
	2902294	1	Rail Kit (Includes Items 2-16) (Belgium Built Machines) **(Prior to SN 1200002342)**	E
	2902384	1	Rail Kit (Includes Items 2-16, 19, 21, 25, 27-29, 32, 33, 35-36, 38 & 40) (USA Built Machines) **(SN 0200124833 through 0200135154)**	F

ITEM	PART NUMBER	QTY	DESCRIPTION	REV
	2902384	1	Rail Kit (Includes Items 2-16, 19, 21, 25, 27-29, 32, 33, 35-36, 38 & 40) (Belgium Built Machines) **(SN 1200002342 through 1200004293)**	F

FIGURE 4-4. RAIL INSTALLATION - 2030ES/2630ES

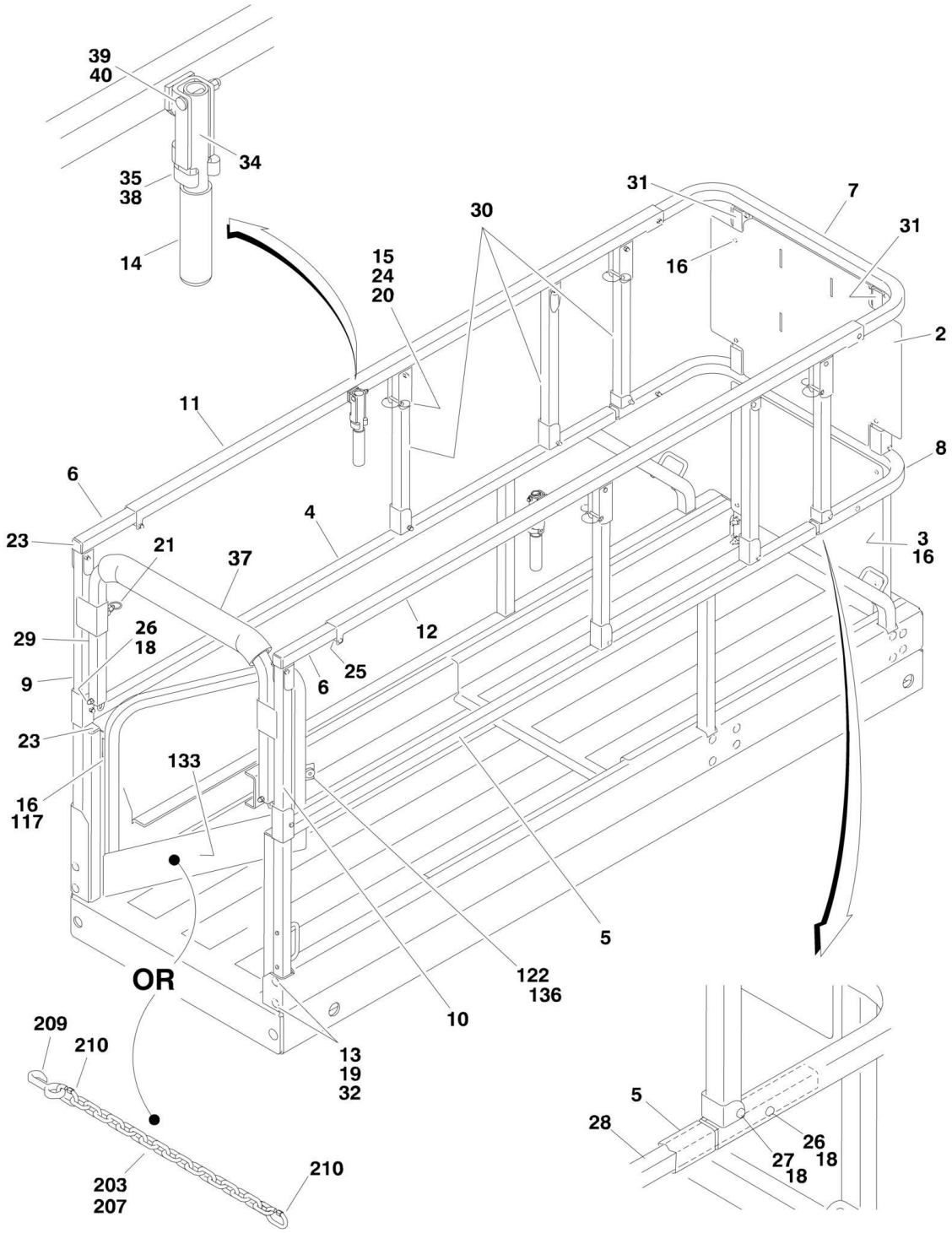

FIGURE 4-4. RAIL INSTALLATION - 2030ES/2630ES

ITEM	PART NUMBER	QTY	DESCRIPTION	REV
		Ref	**RAIL INSTALLATION - 2030ES/2630ES**	
	0272667	Ref	**Rails with Gate Closure**	J
	0272911	Ref	**Rails with Chain Closure**	H
2	3574183	1	Plate, Billboard (Upper)	
3	3574184	1	Plate, Billboard (Lower)	
4	4846791	1	Rail, Side (Left)	
5	4846792	1	Rail, Side (Right)	
6	4846793	2	Rail, Platform (Top)	
7	4846794	1	Rail, Extension (Top)	
8	4846795	1	Rail, Extension (Mid)	
9	4846796	1	Rail, Upright (Left Rear)	
10	4846797	1	Rail, Upright (Right Rear)	
11	4846799	1	Rail, Slide (Left)	
12	4846800	1	Rail, Slide (Right)	
13	0630565	16	Bolt, Carriage M10 x 55	
14	2560088		Handle	
15	1060379	NLA	Lanyard (Use Item 20)	
16	2080040	AR	Fastener, Huck	
18	3290606	AR	Capnut M6	
19	3291005	16	Locknut M10	
20	3421453	NLA	Snap Pin (Use p/n 3423278)	
21	3423047	NLA	Pin, Plunger (Use p/n 3423151)	
23	3520072	4	Cap-Plug	
24	3760170	4	Ring, Split	
25	3860085	2	Roller	
26	4010616	AR	Screw M6 x 40	
27	4010617	24	Screw M6 x 45	
28	4568631	NLA	Extension, Midrail (Use p/n 3841649)	
29	4568645	1	Rail (Rear)	
30	4568667	6	Tube, Folding Post (Platform)	
31	4568711	2	Tube, Folding Post (Extension)	
32	4812000	16	Flatwasher M10	
34	4846786	2	Handle, Extension	
35	1380132	2	Clip, Gripper	
37	3340612	18 in /46cm	Pad, Rail	
38	3820019	2	Rivet	
39	3900345	2	Screw M8 x 45	
40	3290806	2	Capnut M8	
		Ref	Rails Kit - 2030ES/2630ES Options:	
	2902250	1	Rail Kit (Includes Items 2-12, 29-31 & 34) (USA Built Machines) **(Prior to SN 0200124833)**	J
	2902250	1	Rail Kit (Includes Items 2-12, 29-31 & 34) (Belgium Built Machines) **(Prior to SN 1200002342)**	J
	2902376	1	Rails with Gate Closure (Includes Items 2-12, 14-15, 20-21, 24-25, 27, 29-31, 33-40 & 133) (USA Built Machines) **(SN 0200124833 through 0200135154)**	H
	2902376	1	Rails with Gate Closure (Includes Items 2-12, 14-15, 20-21, 24-25, 27, 29-31, 33-40 & 133) (Belgium Built Machines) **(SN 1200002342 through 1200004293)**	H

ITEM	PART NUMBER	QTY	DESCRIPTION	REV
	2902382	1	Rails with Chain Closure (Includes Items 2-12, 14-15, 20-21, 24-25, 27, 29-31 & 33-40) (USA Built Machines) **(SN 0200124833 through 0200135154)**	H
	2902382	1	Rails with Chain Closure (Includes Items 2-12, 14-15, 20-21, 24-25, 27, 29-31 & 33-40) (Belgium Built Machines) **(SN 1200002342 through 1200004293)**	H
	0272667	Ref	**GATE CLOSURE COMPONENTS**	J
117	2600281	2	Hinge	
122	3080006	NLA	Magnet, Gate (Use p/n 3080007)	
133	4846723	1	Gate	
136	3820016	2	Rivet (USA Built Machines) **(Prior to SN 0200125355)**	
136	3820016	1	Rivet (Belgium Built Machines) **(Prior to SN 1200002342)**	
	0272911	Ref	**CHAIN CLOSURE COMPONENTS**	H
203	1260136	2 ft/61cm	Chain	
207	2820097	2 ft/61cm	Cover, Chain	
209	2940064	NLA	Snap Latch (Use p/n 1001101076 - Includes Item 210)	
210	3010088	2	Link	

FIGURE 4-5. RAIL INSTALLATION - 2646ES/3246ES

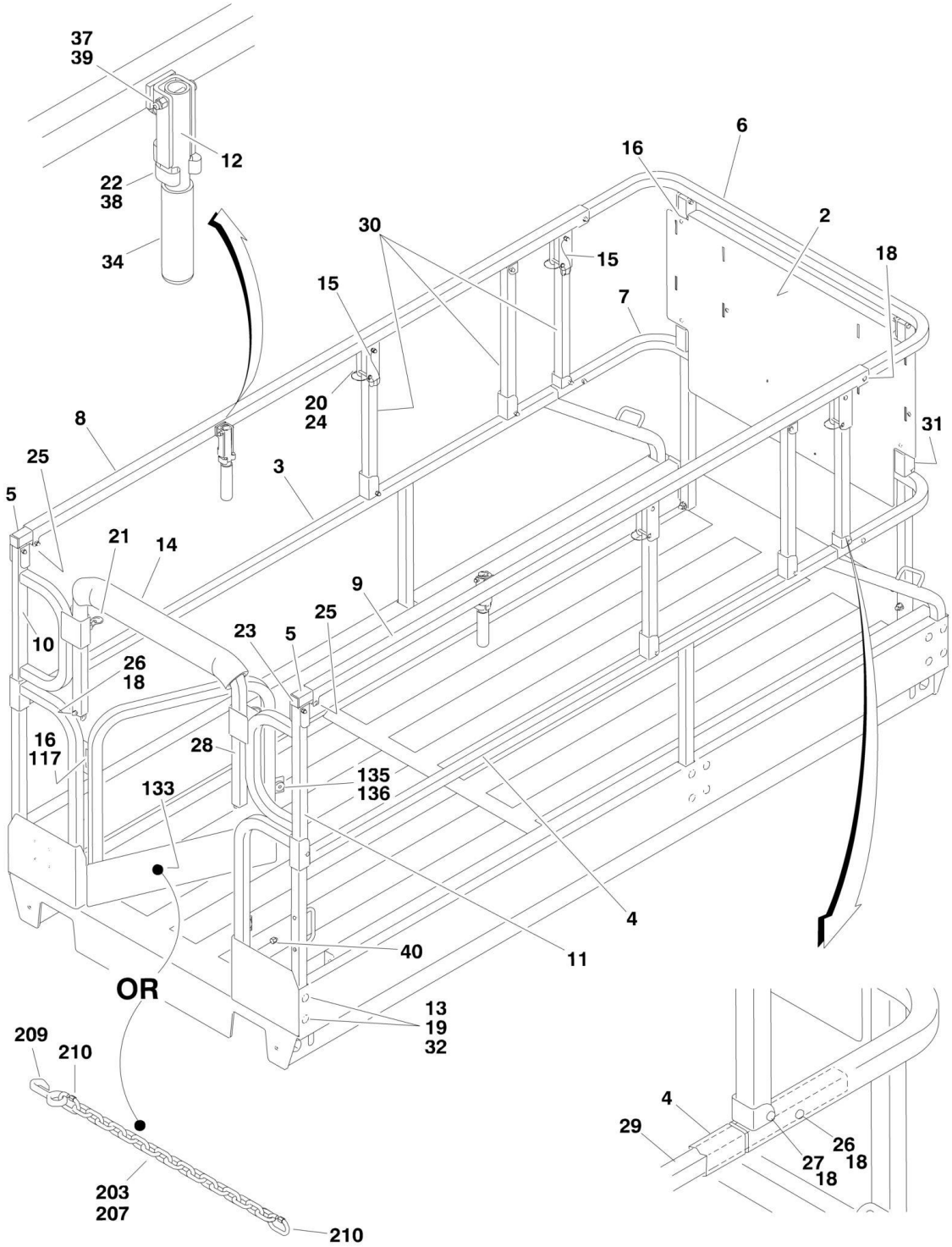

FIGURE 4-5. RAIL INSTALLATION - 2646ES/3246ES

ITEM	PART NUMBER	QTY	DESCRIPTION	REV
		Ref	**RAIL INSTALLATION - 2646ES/3246ES**	
	0272697	Ref	**Gate Entry**	K
	0272912	Ref	**Chain Entry**	I
2	3574150	1	Plate, Billboard	
3		Ref	Rail, Side (Left) Options:	
3	4846770	1	Rail, Side (Left) USA Built Machines **(Prior to SN 0200130600)**	
3	4846770	1	Rail, Side (Left) Belgium Built Machines **(Prior to SN 1200003263)**	
3	3641582	1	Rail, Side (Left) USA Built Machines **(SN 0200130600 through 0200135154)**	
3	3641582	1	Rail, Side (Left) Belgium Built Machines **(SN 1200003263 through 1200004293)**	
4	4846771	1	Rail, Side (Right)	
5	4846772	2	Rail, Platform (Top)	
6	4846776	1	Rail, Extension (Top)	
7	4846777	1	Rail, Extension (Mid)	
8	4846778	1	Rail, Slide (Left)	
9	4846779	1	Rail, Slide (Right)	
10	4846780	1	Rail, Upright (Left Rear)	
11	4846781	1	Rail, Upright (Right Rear)	
12	4846786	2	Handle, Extension	
13	0630565	18	Bolt, Carriage M10 x 55	
14	3340612	18 in /46cm	Pad, Cover	
15	1060379	NLA	Lanyard (Use Item 20)	
16	2080040	Ref	Fastener, Huck	
16	2080040	12	Gate Entry	
16	2080040	4	Chain Entry	
18	3290606	AR	Capnut M6	
19	3291005	18	Locknut M10	
20	3421453	NLA	Snap Pin (Use p/n 3423278)	
21	3423047	NLA	Pin, Plunger (Use p/n 3423151)	
22	1380132	2	Clip, Gripper	
23	3520072	2	Cap-Plug	
24	3760170	4	Ring, Split	
25	3860111	2	Roller	
26	4010616	AR	Screw M6 x 40	
27	4010617	24	Screw M6 x 45	
28	4568645	1	Rail (Rear)	
29	4568664	NLA	Extension, Midrail (Use p/n 3841648)	
30	4568667	6	Tube, Folding Post (Platform)	
31	4568711	2	Tube, Folding Post (Extension)	
32	4812000	18	Flatwasher M10	
34	2560088	2	Grip, Handle	
37	3290806	2	Capnut M8	
38	3820019	2	Rivet	
39	3900345	2	Screw M8 x 45	
40	3300477	2	Nut, Acorn	
		Ref	Rails Kit - 2646ES/3246ES Options:	
	2902247	1	Rail Kit (Includes Items 2-12, 28, 30 & 31) (USA Built Machines) **(Prior to SN 0200124833)**	J

ITEM	PART NUMBER	QTY	DESCRIPTION	REV
	2902247	1	Rail Kit (Includes Items 2-12, 28, 30 & 31) (Belgium Built Machines) **(Prior to SN 1200002342)**	J
	2902381	1	Rails Kit with Gate Closure (Includes Items 2-12, 14-15, 20-22, 24-25, 27-28, 30-31, 33-34, 36-39 & 133) (USA Built Machines) **(SN 0200124833 through 0200135154)**	H
	2902381	1	Rails Kit with Gate Closure (Includes Items 2-12, 14-15, 20-22, 24-25, 27-28, 30-31, 33-34, 36-39 & 133) (Belgium Built Machines) **(SN 1200002342 through 1200004293)**	H
	2902383	1	Rails Kit with Chain Closure (Includes Items 2-12, 14-15, 20-22, 24-25, 27-28, 30-31, 33-34 & 36-39) (USA Built Machines) **(SN 0200124833 through 0200135154)**	H
	2902383	1	Rails Kit with Chain Closure (Includes Items 2-12, 14-15, 20-22, 24-25, 27-28, 30-31, 33-34 & 36-39) (Belgium Built Machines) **(SN 1200002342 through 1200004293)**	H
	0272697	Ref	**GATE ENTRY INSTALLATION**	K
117	2600281	2	Hinge	
133	4846723	1	Gate	
135	3080006	NLA	Magnet, Gate (Use p/n 3080007)	
136	3820016	2	Rivet (USA Built Machines) **(Prior to SN 0200125355)**	
136	3820016	1	Rivet (Belgium Built Machines) **(Prior to SN 1200002342)**	
	0272912	Ref	**CHAIN ENTRY INSTALLATION**	I
203	1260136	2 ft/61m	Chain	
207	2820097	2 ft/61m	Cover, Chain	
209	2940064	NLA	Snap, Latch (Use p/n 1001101076 - Includes Item 210)	
210	3010088	2	Link, Repair	

FIGURE 4-6. PLATFORM CONSOLE BOX INSTALLATION

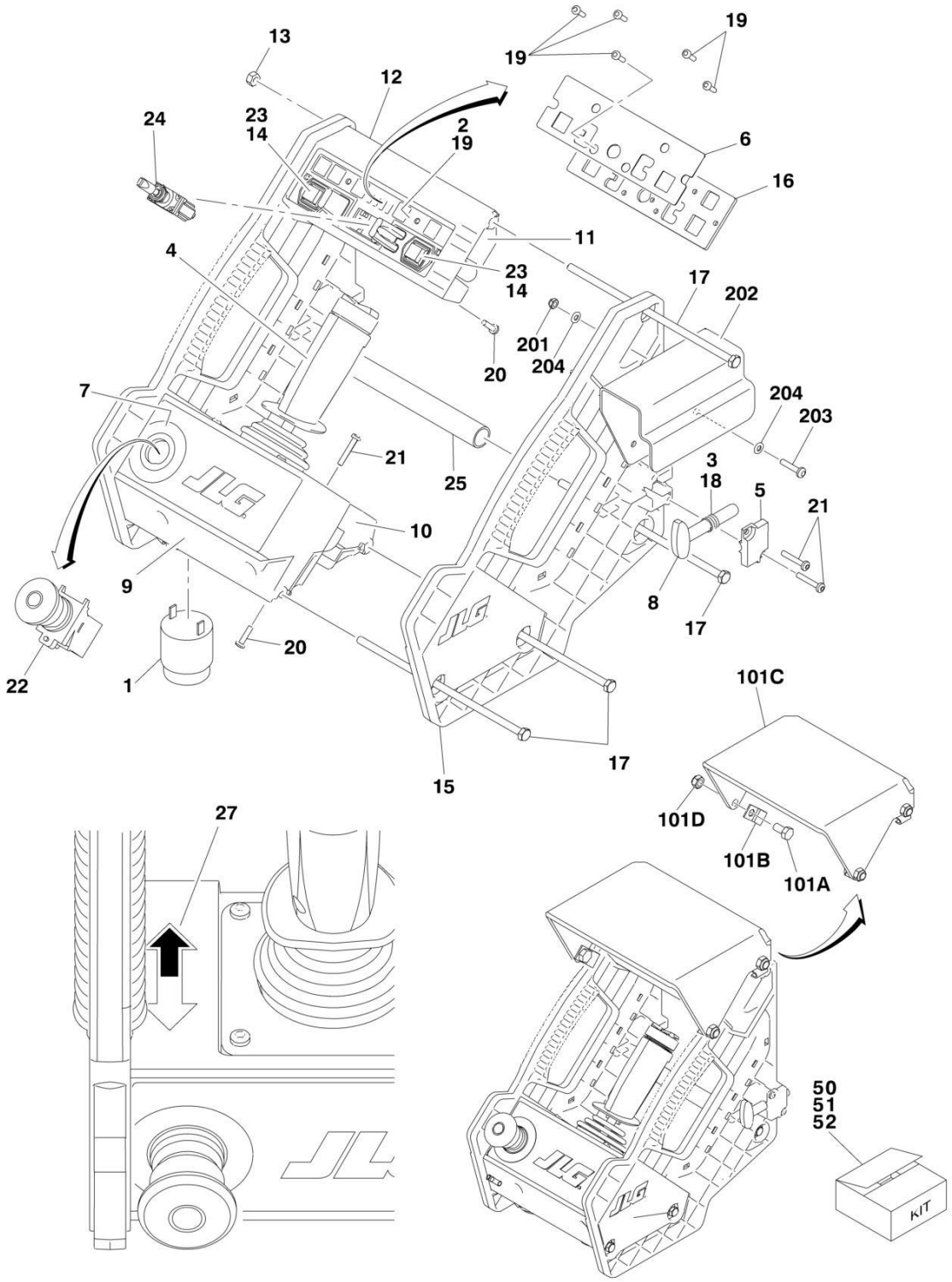

FIGURE 4-6. PLATFORM CONSOLE BOX INSTALLATION

ITEM	PART NUMBER	QTY	DESCRIPTION	REV
		Ref	**CONSOLE BOX ASSEMBLY**	
	0272778	Ref	**All Specs except CE Spec (See Note)**	F
	0272779	Ref	**CE Spec (See Note)**	F
		Ref	**Note: When replacing complete assembly, use p/n 1001091153 for All Specs except CE Spec Machines. Use p/n 1001091154 for CE Spec Machines.**	
1	0140011	1	Alarm	
2	0610162	NLA	Module, Platform Box Control (Use Item 52)	
3	1380156	1	E-Clip	
4	1600345	NLA	Drive/Steer Controller Assembly (Use p/n 1001134438) (See DRIVE/STEER CONTROLLER ASSEMBLY for Breakdown)	
5	1671098	1	Latch	
6		Ref	Decal - Icon Options:	
6	1705674	1	Decal - Icon All Specs except CE Spec	
6	1705675	1	Decal - Icon CE Spec	
7	1705676	1	Decal - Emergency Stop Ring	
8	2560179	1	Handle, Latch	
9	2760113	NLA	Housing, Joystick (Lower) (Use p/n 1001091390)	
10	2760114	NLA	Mount, Joystick (Use p/n 1001091390)	
11	2760115	NLA	Housing, Module Mounting (Lower) (Use p/n 1001091279)	
12	2760116	NLA	Housing, Module Mounting (Upper) (Use Item 51 or 52)	
13	3300473	4	Nut M6	
14	3340968	2	Button (Includes Black Button Only)	
15	3380475	2	Panel, Side	
16	3574249	NLA	Plate, Decal (Use Item 50, 51 or 52)	
17	3900333	4	Screw M6 x 190	
18	4160203	1	Spring, Compression	
19	4191306	11	Screw M3.5 x 12	
20	4191407	8	Screw M4 x 16	
21	4191409	6	Screw M4 x 25	
22	4360475	1	Switch, Emergency Stop	
22	7020175	1	Cap	
22	7020176	1	Block, Contact	
23	4360538	2	Strip, Switch and Membrane	
24	4360539	1	Switch, Toggle	
25	4568738	1	Tube, Spacer	
26	4922870	1	Harness, Platform Box (Not Shown - See ELECTRICAL SECTION for Breakdown)	
27	1703819	1	Decal - Directional Arrow	
		Ref	Kit Options:	
50	1001091967	1	Kit 1 - Decal Kit (Includes Items 6, 16 & 19)	A
		Ref	**Note: Two Item 6's are included in the kit - 1 for All Specs except CE and 1 for CE Specs. Use decal required for applicable spec. Dispose of the decal not used.**	
		Ref	**Note: If Housing has been replaced with Kit 1001091393 or Kit 1001091965, use Decal Kit p/n 1001091968**	
51	1001091393	1	Kit 2 - Decal and Housing Kit (Includes Items 6, 12, 16 & 19)	A
		Ref	**Note: Two Item 6's are included in the kit - 1 for All Specs except CE and 1 for CE Specs. Use decal required for applicable spec. Dispose of the decal not used.**	
52	1001091965	1	Kit 3 - Decal, Housing and PC Board Kit (Includes Items 2, 6, 12, 16 & 19)	A

ITEM	PART NUMBER	QTY	DESCRIPTION	REV
		Ref	**Note: Two Item 6's are included in the kit - 1 for All Specs except CE and 1 for CE Specs. Use decal required for applicable spec. Dispose of the decal not used.**	
	0272878	Ref	**ANTI-VANDELISM PACKAGE INSTALLATION (NOT SHOWN)**	A
	1671131	1	Cover, Lockable Platform Console Box	
	0273841	Ref	**PLATFORM BOX COVER INSTALLATION (Use p/n 1001118216 as Replacement)**	C
101	2902341	NLA	Kit, Platform Box Shield (Use p/n 1001118215)	
101A	0760808	4	Bolt M8 x 16	
101B	1380159	4	Clip, Cover Mounting	
101C	1671161	NLA	Cover, Platform Box (Use p/n 1001116154)	
101D	3290805	4	Locknut M8	
	0274386	Ref	**PLATFORM BOX HANGER INSTALLATION (OPTIONAL)**	B
201	3290405	2	Locknut M4	
202	3575794	1	Plate, Bracket	
203	3900338	2	Screw M4 x 20	
204	4811400	4	Flatwasher M4	

FIGURE 4-7. DRIVE/STEER CONTROLLER ASSEMBLY (ORIGINAL EQUIPMENT)

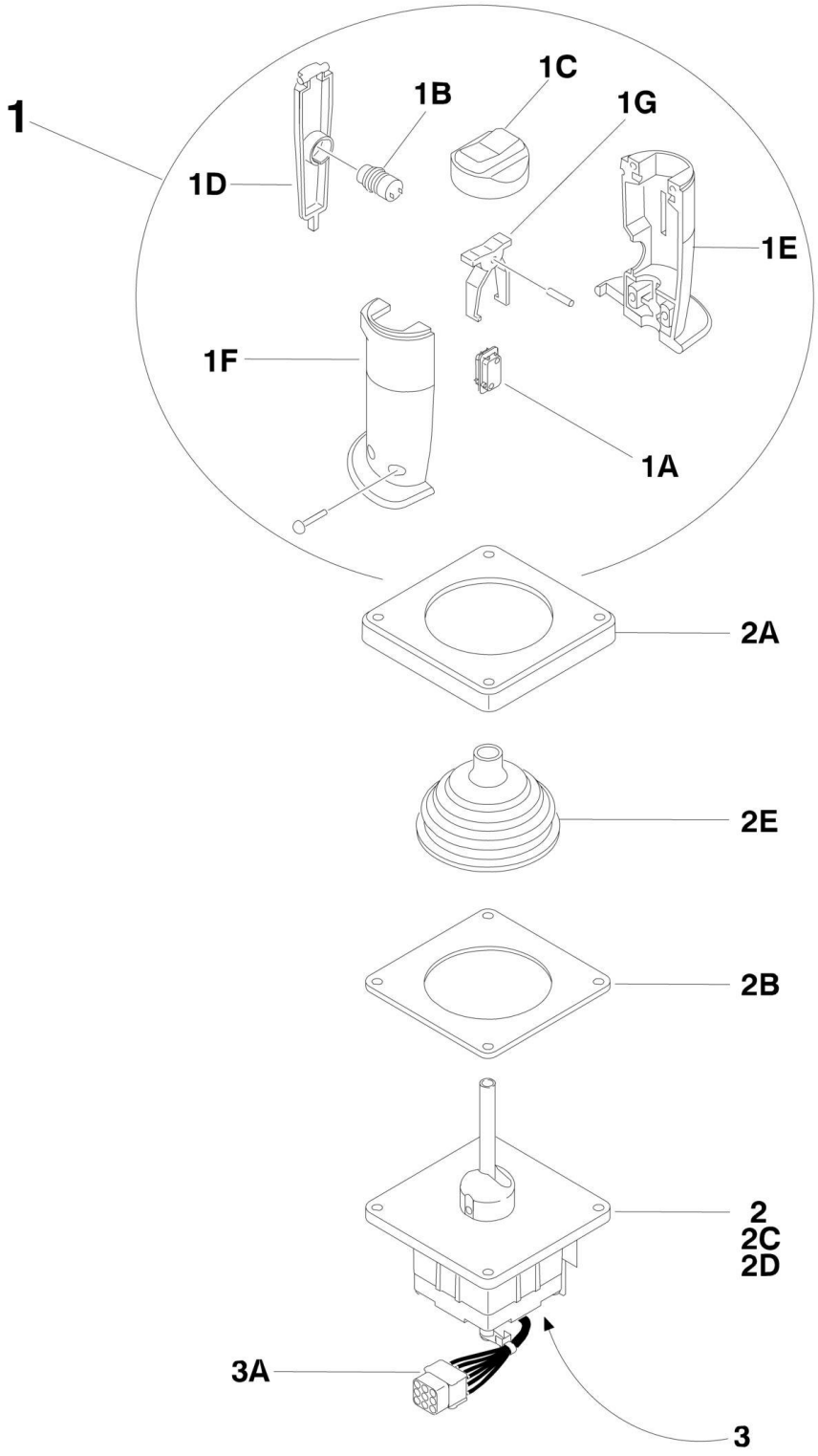

FIGURE 4-7. DRIVE/STEER CONTROLLER ASSEMBLY (ORIGINAL EQUIPMENT)

ITEM	PART NUMBER	QTY	DESCRIPTION	REV
	1600345	Ref	**CONTROLLER ASSEMBLY**	A
		Ref	**Note: Original Equipment controller p/n 1600345 may have been replaced with Service Replacement controller p/n 1001134438. Visually identify controller before ordering parts.**	
1	7020551	1	Grip Assembly	
1A	7020500	2	Switch, Steer Rocker	
1B	7020501	1	Switch, Enable Push Button	
1C	7003790	1	Cap, Rubber Rocker (Includes Lock Ring)	
1D	7011997	1	Trigger	
1E	See Note	NSS	Grip - Right Half (Note: Use Item 1)	
1F	See Note	NSS	Grip - Left Half (Note: Use Item 1)	
1G	See Note	NSS	Actuator, Switch (Note: Use Item 1)	
2	See Note	NSS	Handle/Housing Assembly (Note: Use p/n 1001134438)	
2A	7020552	1	Bezel	
2B	7020553	1	Gasket	
2C	7020554	1	Spring, Centering	
2D	7020555	1	Foot, Centering	
2E	7020556	1	Boot, Rubber	
3	See Note	NSS	Electrical Assembly (Not Shown) (Note: Use p/n 1001134438)	
3A	4460266	1	Connector, Receptacle - 9 Pin	
3A	4460226	7	Socket, Female	
3A	4460265	1	Plug, Male - 9 Position (Part of Platform Box Harness)	
3A	4460227	7	Pin, Male (Part of Platform Box Harness)	

FIGURE 4-8. DRIVE/STEER CONTROLLER ASSEMBLY (SERVICE REPLACEMENT)

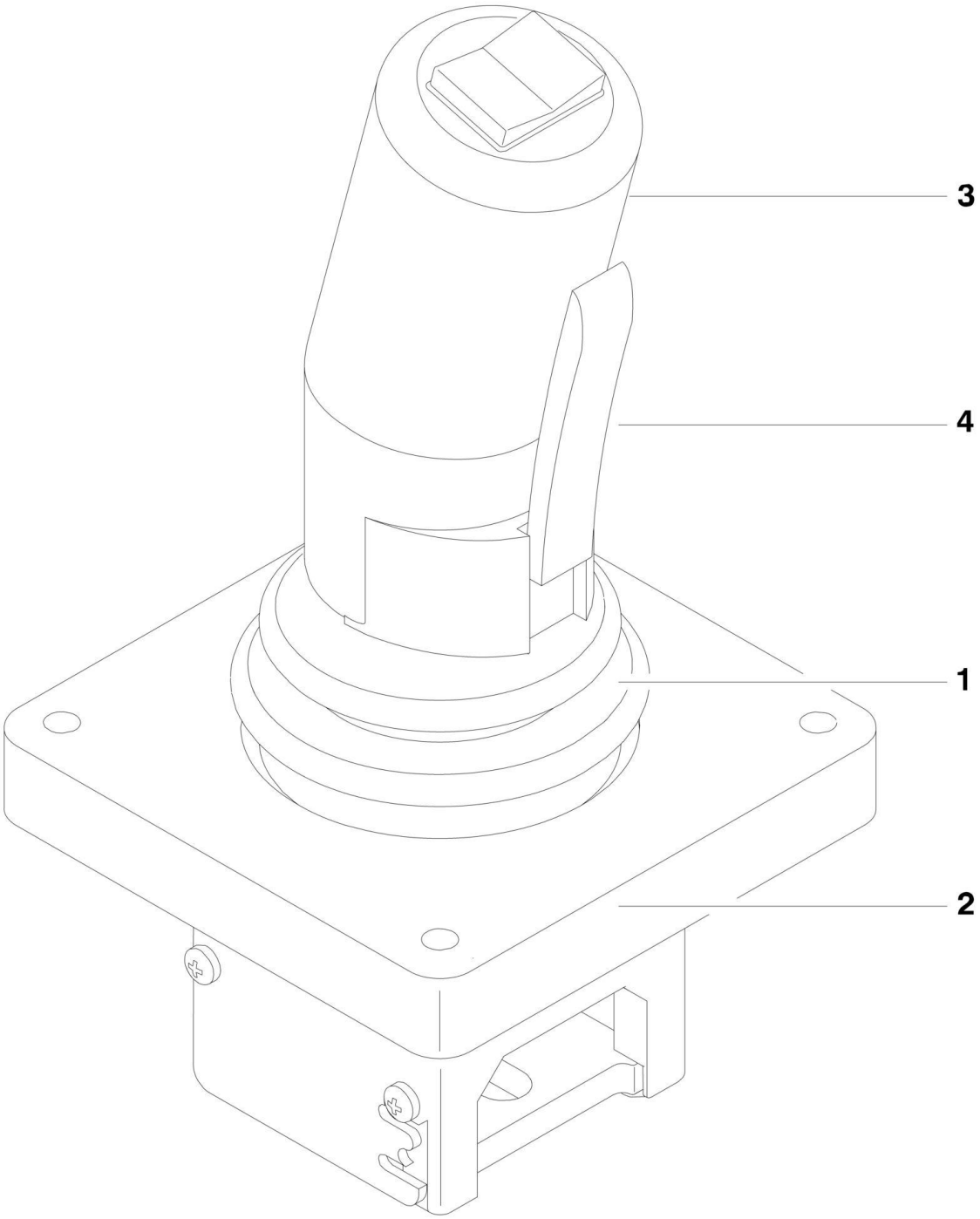

FIGURE 4-8. DRIVE/STEER CONTROLLER ASSEMBLY (SERVICE REPLACEMENT)

ITEM	PART NUMBER	QTY	DESCRIPTION	REV
	1600402	Ref	**DRIVE/STEER CONTROLLER ASSEMBLY**	A
		Ref	**Note: Use p/n 1001134438 Kit (Includes p/n 1600402) as replacement. Original Equipment was p/n 1600345.**	
1	70001250	1	Boot, Panel	
2	70001252	1	Gasket, Mounting	
2	70001251	1	Bezel, Mounting	
3	70003650	1	Handle Repair Kit (Includes handle gasket, item#4 push button and item#4 lever installed in front handle half, back handle half, top actuator, boot and hardware)	
3	70000084	1	Cap, Rubber	
3	70000082	1	Microswitch	
3	7027766	1	Ring, Retaining	
3	7027365	1	Actuator, Handle	
3	70001253	1	Gasket, Handle	
3	70000683	4	Washer, Neoprene	
3	70000685	2	Spacer, Plastic	
3	70000686	2	Screw (Top)	
3	70000684	2	Screw (Bottom)	
4	7027367	1	Switch, Push button	
4	7027765	1	Lever, Enable	

FIGURE 4-9. WORKSTATION INSTALLATION

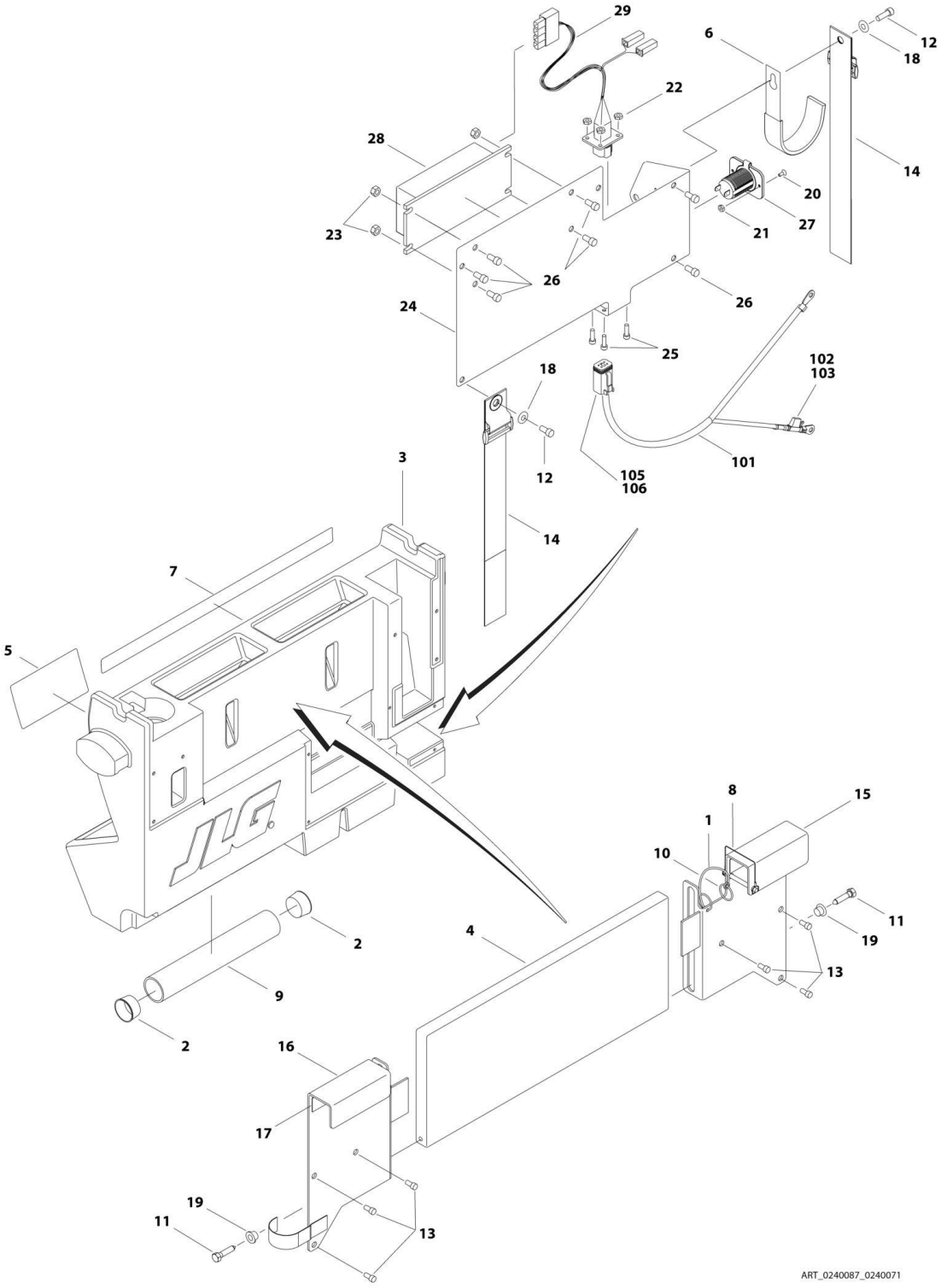

FIGURE 4-9. WORKSTATION INSTALLATION

ITEM	PART NUMBER	QTY	DESCRIPTION	REV
		Ref	**WORKSTATION INSTALLATIONS**	
	0240087	Ref	**Workstation W/O DC Converter**	B
	0240071	Ref	**Workstation W/DC Converter**	B
1	1060379	1	Cable, Lanyard	
2	1120555	2	Cap, Manual Storage	
3	1580023	1	Container	
4	1580024	1	Tray	
5	1705997	1	Decal – Workstation	
6	2700100	1	Hook, Hanger	
7	2902348	1	Decal – Workstation Kit	
8	3422219	1	Pin	
9	3460334	1	PVC Pipe	
10	3760170	2	Ring	
11	3900355	2	Screw 5/16 x 1-1/2	
12	3931412	2	Bolt 1/4 x 3/4	
13	3931508	6	Bolt 5/16 x 1/2	
14	4240003	2	Strap	
15	4340853	1	Mount, RH Channel	
16	4340854	1	Mount, LH Channel	
17	4420062	3 ft/0.9m	Tape	
18	4711400	2	Washer 1/4	
19	4740480	2	Insert, Plastic	
20	0740603	2	Screw #6 x 3/4 (Workstation W/DC Converter Only)	
21	3310601	2	Nut #6 (Workstation W/DC Converter Only)	
22	3311005	4	Locknut #10 (Workstation W/DC Converter Only)	
23	3311405	1	Locknut 1/4 (Workstation W/DC Converter Only)	
24	3380527	1	Panel, Converter/Receptacle (Workstation W/DC Converter Only)	
25	3931010	4	Bolt #10 x 5/8 (Workstation W/DC Converter Only)	
26	3931408	1	Bolt 1/4 x 1/2 (Workstation W/DC Converter Only)	
27	4461012	1	Receptacle (Workstation W/DC Converter Only)	
28	4530026	1	Transformer (Workstation W/DC Converter Only)	
29	4923121	1	Harness, Workstation (Workstation W/DC Converter Only)	
29	4460885	1	Connector – 4 Position	
29	4460464	4	Pin	
29	4460878	1	Connector – 4 Position	
29	4460887	4	Terminal	
		Ref	**WORKSTATION POWER CABLE INSTALLATIONS**	
	4923114	Ref	**1930ES/2030ES**	A
	4923115	Ref	**2630ES/2646ES/3246ES**	A
101	1060331	60 ft/18.3m	Electrical Cable – 16/4 (1930ES/2030ES)	
101	1060331	70 ft/21.3m	Electrical Cable – 16/4 (2630ES/2646ES/3246ES)	
102	2400061	1	Fuse – 10 Amp	
103	2400066	1	Holder, Fuse	
105	4460465	4	Socket, Female	
106	4460884	1	Connector – 4 Position	

FIGURE 4-10. PACKAGE INSTALLATION (1930ES/2030ES/2630ES)

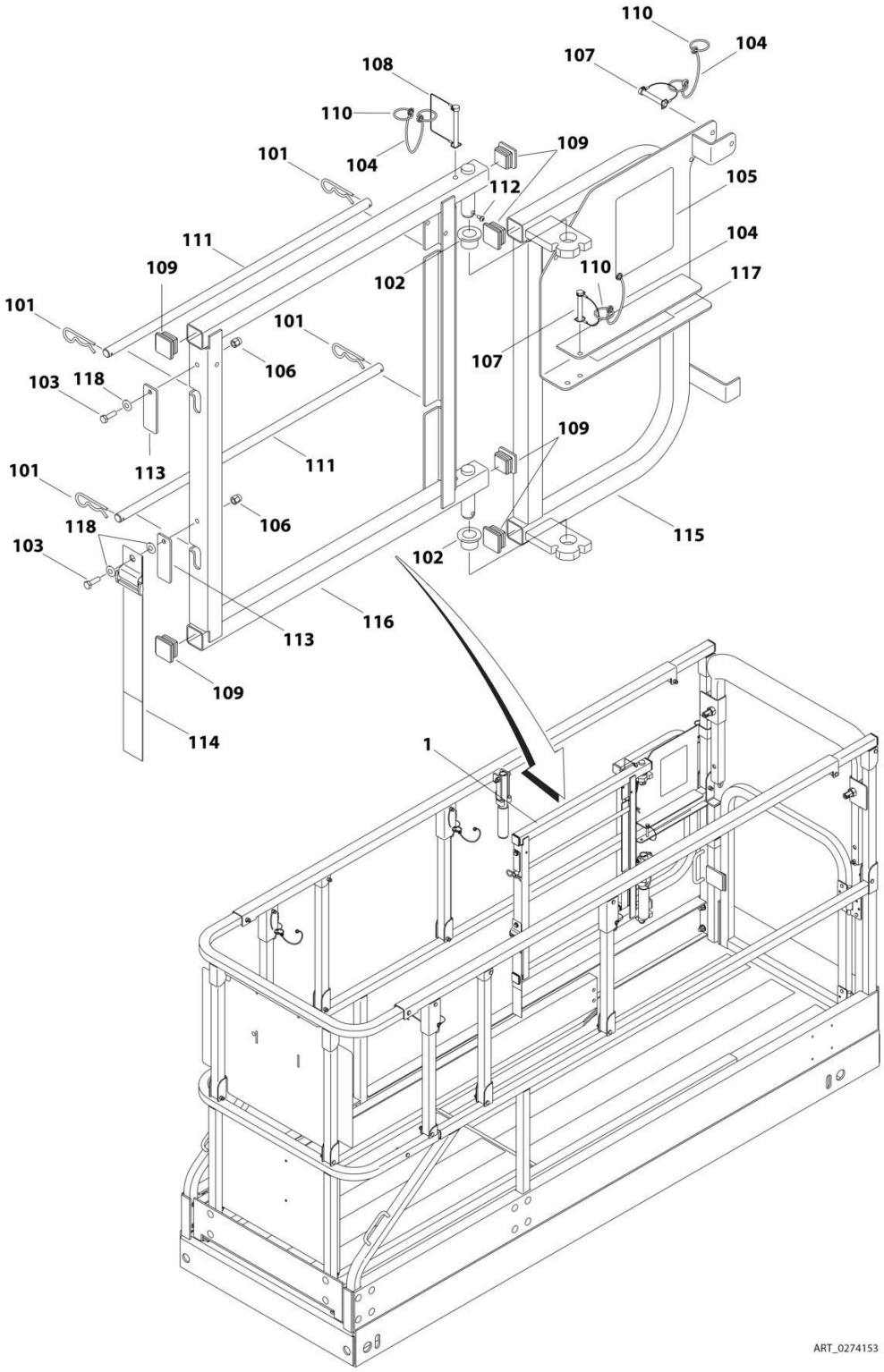

FIGURE 4-10. PACKAGE INSTALLATION (1930ES/2030ES/2630ES)

ITEM	PART NUMBER	QTY	DESCRIPTION	REV
	0274153	Ref	**ELECTRICIAN'S TREE INSTALLATION (1930ES/2030ES/2630ES)**	A
1	0240102	1	Electrician's Tree (See Items 101-118 for Breakdown)	
	0240102	Ref	**ELECTRICIAN'S TREE**	A
101	80325	4	Hairpin, Cotter	
102	0440223	2	Bushing	
103	0700610	3	Bolt M6 x 20	
104	1060379	3	Cable, Lanyard	
105	2902386	1	Decal – Electrician's Tree Kit	
106	3290606	3	Nut M6	
107	3421453	2	Pin	
108	3422219	1	Pin	
109	3520072	6	Plug	
110	3760170	5	Ring	
111	3841675	2	Rod, Spool	
112	4191706	1	Screw M6 x 12	
113	4220227	2	Stop, Spool Rod	
114	4240003	1	Strap	
115	4340946	1	Mount, Base Pivot	
116	4340947	1	Mount, Spool Rack	
117	4420062	1	Tape, UHMW	
118	4711400	3	Washer 1/4	

FIGURE 4-11. PACKAGE INSTALLATION (2646ES/3246ES)

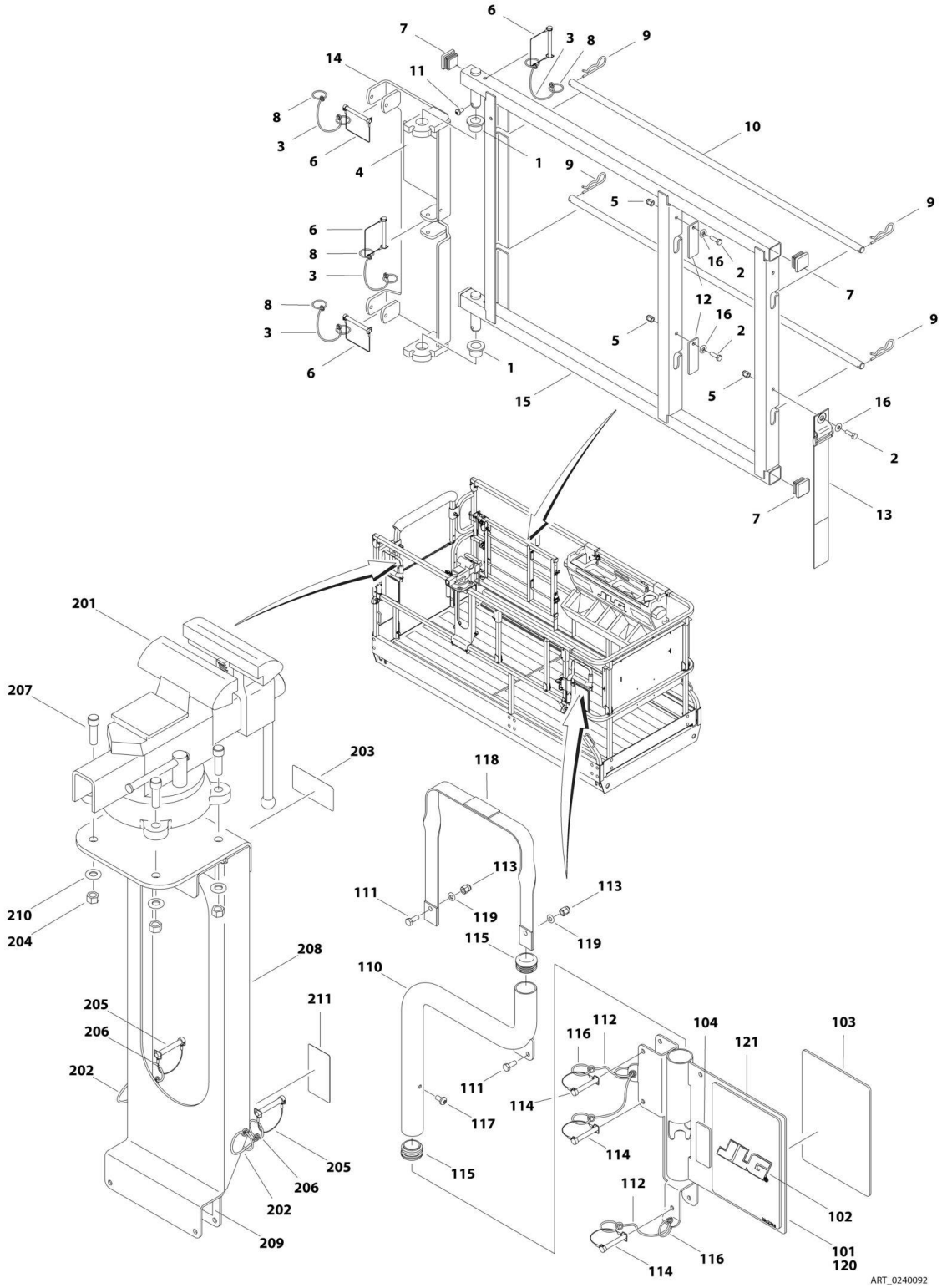

FIGURE 4-11. PACKAGE INSTALLATION (2646ES/3246ES)

ITEM	PART NUMBER	QTY	DESCRIPTION	REV
	0240092	Ref	**ACCESSORY, INSTALLATIONS (ELECTRICAL PACKAGE) (2646ES/3246ES)**	B
1	0440223	2	Bushing	
2	0700610	3	Bolt M6 x 20	
3	1060379	4	Cable, Lanyard	
4	2902347	1	Decal – Electrician's Tree Kit	
5	3290606	3	Nut M6	
6	3422219	4	Pin	
7	3520072	4	Plug	
8	3760170	8	Ring	
9	80325	4	Hairpin, Cotter	
10	3841667	2	Rod, Spool	
11	4191706	1	Screw M6 x 12	
12	4220227	2	Stop, Spool Rod	
13	4240003	1	Strap	
14	4340909	1	Mount, Base Pivot	
15	4340910	1	Mount, Spool Rack	
16	4711400	3	Washer 1/4	
		Ref	**ACCESSORY, PIPE RACK INSTALLATIONS (ELECTRICAL, PLUMBERS AND PLANT PACKAGES)**	
	0272883	Ref	**Australian Spec (Prior to SN 0200122251, Prior to SN 1200001991)**	C
	0272884	Ref	**ANSI, ANSI Export and CSA Specs (Prior to SN 0200122251, Prior to SN 1200001991)**	C
	0272917	Ref	**CE and Japan Specs (Prior to SN 0200122251, Prior to SN 1200001991)**	C
	0272884	Ref	**All Specs (SN 0200122251 through 0200135154, SN 1200001991 through 1200004293)**	D
101	0240057	2	Accessory, Pipe Rack Tube (See Items 110-121 for Breakdown)	
102	1702010	2	Decal – JLG	
103		Ref	Decal – Pipe Rack Capacity Options:	
103	1705931	2	Australian Spec	
103	Not Required		ANSI, ANSI Export and CSA Specs	
103	1705933	2	CE and Japan Specs	
104	8005670	2	Decal – Instruction Read Operators Manual	
	0240057	Ref	**ACCESSORY, PIPE RACK ASSEMBLIES (ELECTRICAL, PLUMBERS AND PLANT PACKAGES)**	E
110	0240054	1	Accessory, Pipe Rack Tube	
111	0700608	2	Bolt M6 x 16	
112	1060379	3	Cable, Lanyard	
113	3290606	2	Nut M6	
114	3421453	3	Pin	
115	3520176	2	Plug	
116	3760170	5	Ring	
117	4191706	1	Screw M6 x 12	
118	4240164	1	Strap	
119	4811700	4	Washer M6	
120	4846876	1	Pipe Rack	
121	2902346	2	Decal – Capacity Pipe Rack Kit	
	0240093	Ref	**ACCESSORY, VISE (ELECTRICAL, PLUMBERS AND PLANT PACKAGES)**	B

ITEM	PART NUMBER	QTY	DESCRIPTION	REV
201	0240088	1	Vise	
202	1060379	2	Cable, Lanyard	
203	1705985	1	Decal – Weight	
204	3311605	4	Nut 3/8-16	
205	3421453	2	Pin	
206	3760170	4	Ring	
207	3931620	4	Bolt 3/8 x 1-1/4	
208	4340911	1	Mount	
209	4420062	3 ft/0.9m	Tape, UHMW	
210	4711600	4	Washer 3/8	
211	8005670	1	Decal – Instruction Read Operators Manual	

FIGURE 4-12. PANEL INSTALLATIONS

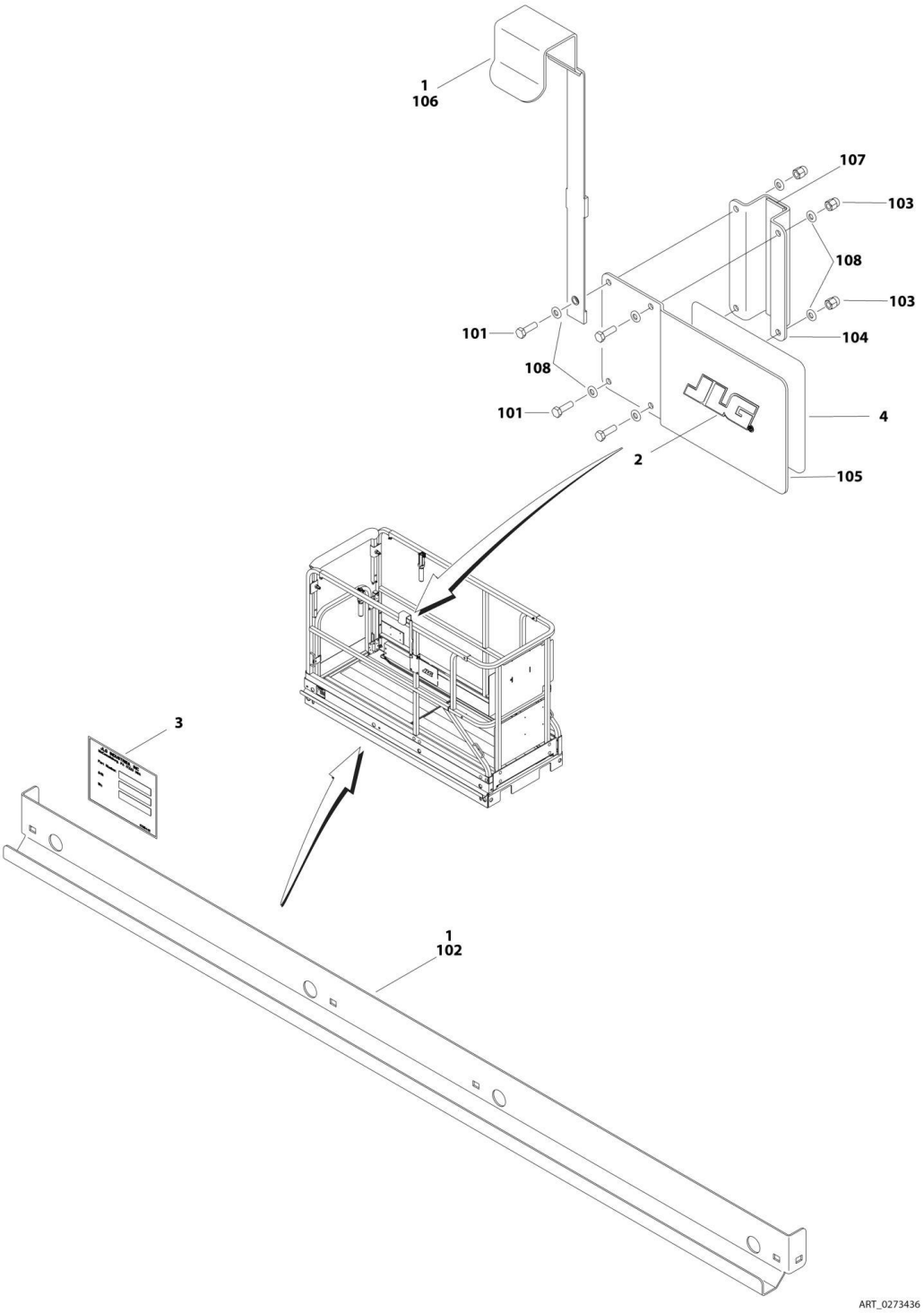

FIGURE 4-12. PANEL INSTALLATIONS

ITEM	PART NUMBER	QTY	DESCRIPTION	REV
		Ref	**PANEL CARRIER INSTALLATIONS**	
		Ref	**1930ES Options:**	
	0273436	Ref	**ANSI and ANSI Export Specs**	E
	0272858	Ref	**Australian, CE and Japan Specs**	E
		Ref	**2030ES/2630ES Options**	
	0273437	Ref	**ANSI and ANSI Export Specs**	E
	0272859	Ref	**Australian, CE and Japan Specs**	E
		Ref	**2646ES/3246ES Options**	
	0273438	Ref	**ANSI and ANSI Export Specs**	D
	0272860	Ref	**Australian, CE and Japan Specs**	C
		Ref	Attach, Panel Carrier Options: (See Items 101-108 for Breakdown)	
1	0240060	1	1930ES	
1	0240061	1	2030ES/2630ES	
1	0240062	1	2646ES/3246ES	
2	1702010	1	Decal – JLG	
3	See Note	1	Nameplate (Note: Not Available for Purchase)	
4		Ref	Decal – Capacity Options:	
4	1705934	1	1930ES/2030ES/2630ES (ANSI and ANSI Export Specs)	
4	1705935	1	1930ES/2030ES/2630ES (Australian, CE and Japan Specs)	
4	1705792	1	2646ES/3246ES (ANSI and ANSI Export Specs)	
4	1705793	1	2646ES/3246ES (Australian, CE and Japan Specs)	
		Ref	**PANEL CARRIER ATTACHMENTS**	
	0240060	Ref	**1930ES**	C
	0240061	Ref	**2030ES/2630ES**	C
	0240062	Ref	**2646ES/3246ES**	C
101	0760610	4	Bolt M6 x 20	
102		Ref	Channel Options:	
102	1271574	1	1930ES	
102	1271565	1	2030ES/2630ES	
102	1271564	1	2646ES/3246ES	
103	3290606	4	Nut M6	
104	3574505	1	Plate, Bracket	
105	3574506	1	Plate, Bracket	
106	4240165	1	Strap, Tie Down	
107	4420037	AR	Tape, Insulation	
108	4811700	8	Washer, M6	

FIGURE 4-13. QUIK WELDER INSTALLATION (Prior to SN 0200123646, Prior to SN 1200002324)

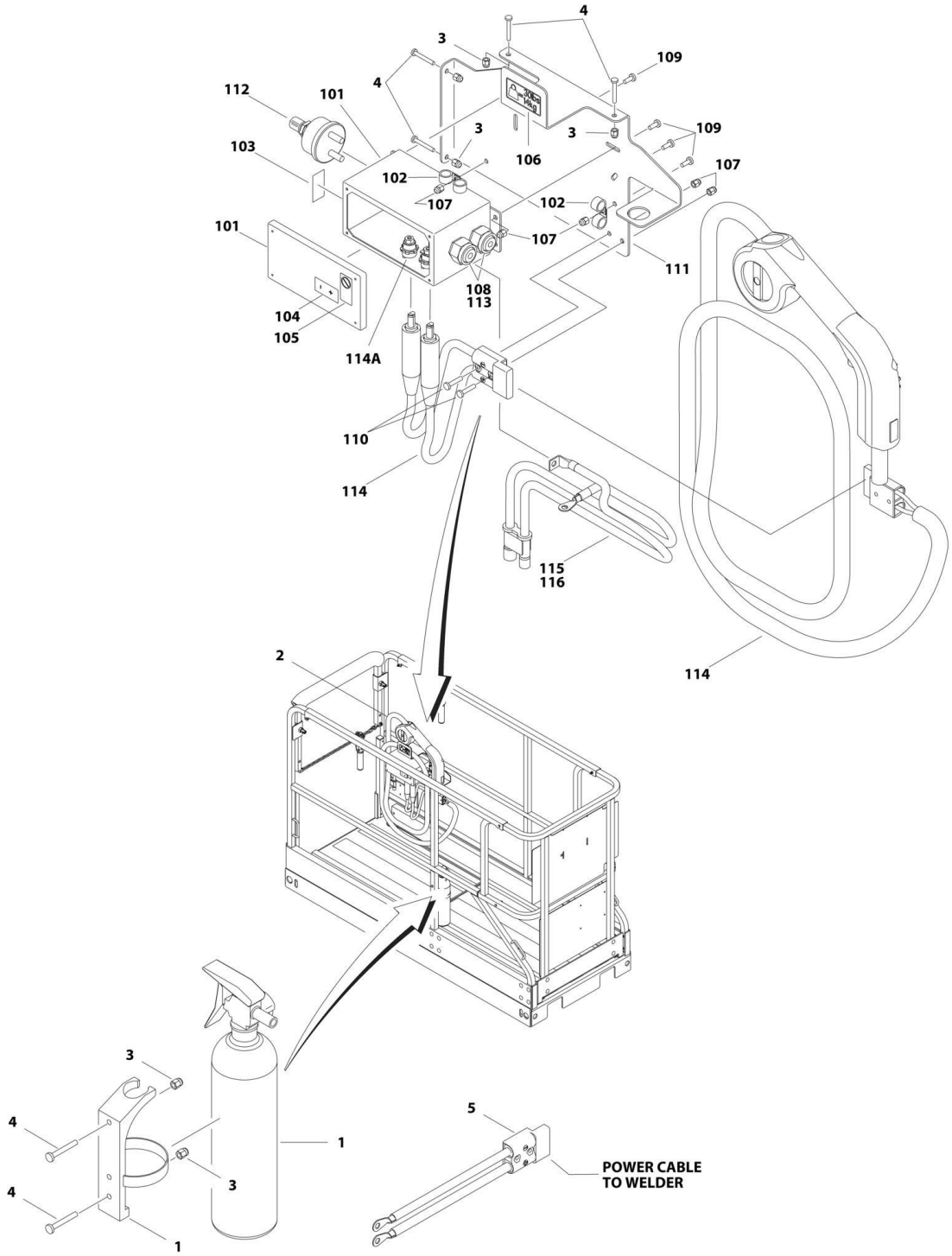

FIGURE 4-13. QUIK WELDER INSTALLATION (Prior to SN 0200123646, Prior to SN 1200002324)

ITEM	PART NUMBER	QTY	DESCRIPTION	REV
		Ref	**QUIK WELDER INSTALLATIONS**	
	0272879	Ref	**1930ES**	A
	0272880	Ref	**2030ES**	A
	0272881	Ref	**2630ES**	A
	0272882	Ref	**2646ES/3246ES**	A
1	2030010	1	Extinguisher, Fire	
2	2902334	1	Kit, Quik Welder (See Items 101-120 for Breakdown)	
3	3290606	6	Bolt M6 x 1	
4	4010617	6	Screw M6 x 45	
5		Ref	Cable, Quik Welder Power Options:	
5	4923049	1	1930ES	
5	4923050	1	2030ES	
5	4923051	1	2630ES	
5	4923052	1	2646ES/3246ES	
	2902334	Ref	**QUIK WELDER KIT**	A
101	0861527	1	Box, Welder Disconnect	
102	1320224	4	Clamp	
103	1705213	1	Decal – On/Off	
104	1705214	1	Decal – Plus/ Minus	
105	1705305	1	Decal – Weld Lead	
106	1705953	1	Decal – Weight	
107	3290606	8	Nut M6	
108	3300048	2	Nut 3/4	
109	4010608	6	Screw M6 x 16	
110	4010614	2	Screw M6 x 30	
111	4340860	1	Quik Welder Box Mounting	
112	4360155	1	Switch, Master Disconnect	
113	4460328	2	Terminal, Connector	
114	4530021	1	Welder	
114A	7027303	2	Connector, Female	
115	4923048	1	Cable, Quik Welder Assembly	
116	1060957	1	Cable, Welder	

FIGURE 4-14. QUIK WELDER INSTALLATION (SN 0200123646 through 0200135154, SN 1200002324 through 1200004293)

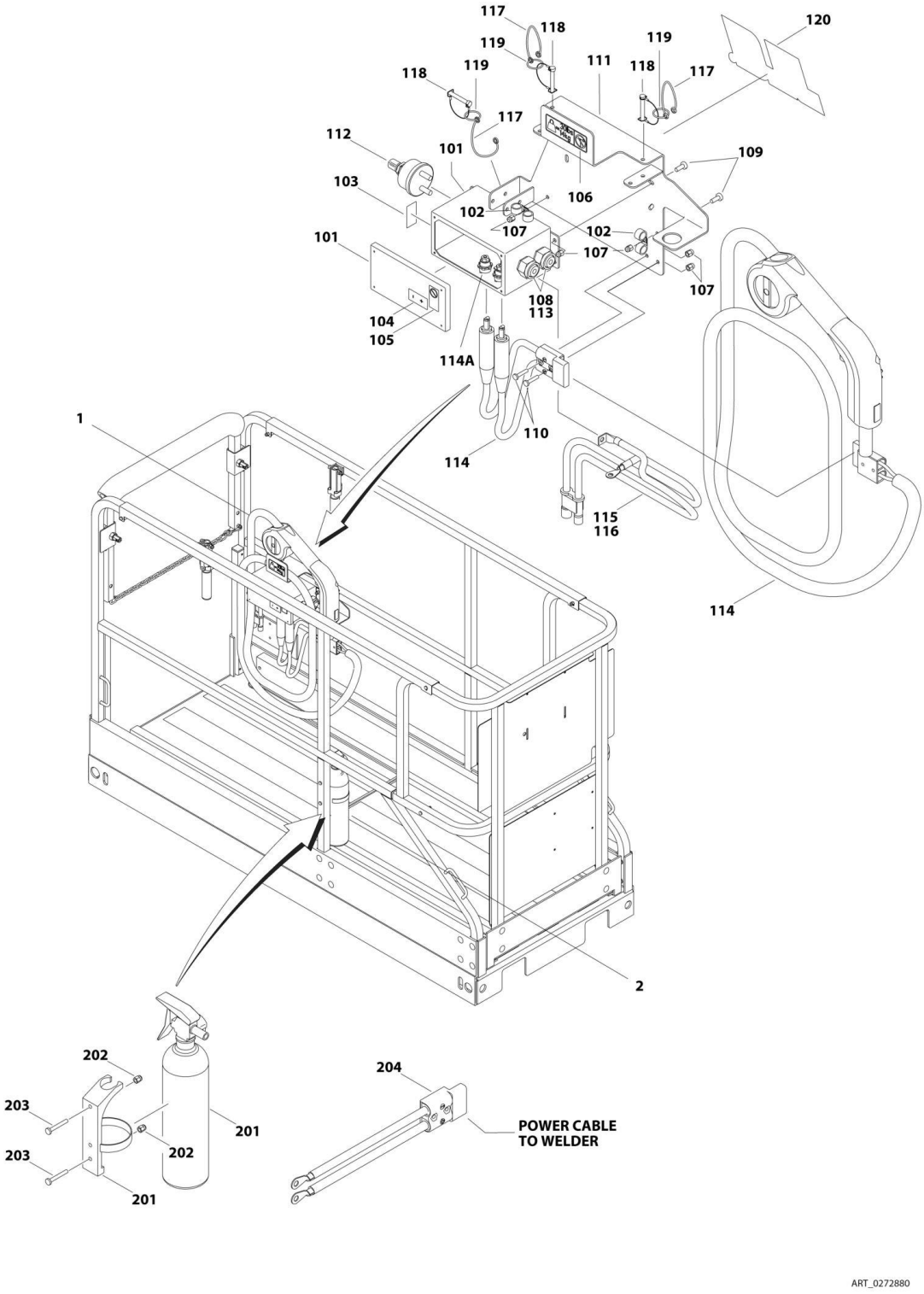

FIGURE 4-14. QUIK WELDER INSTALLATION (SN 0200123646 through 0200135154, SN 1200002324 through 1200004293)

ITEM	PART NUMBER	QTY	DESCRIPTION	REV
		Ref	**QUIK WELDER INSTALLATIONS**	
	0272879	Ref	**1930ES**	C
	0272880	Ref	**2030ES**	C
	0272881	Ref	**2630ES**	C
	0272882	Ref	**2646ES/3246ES**	C
1	2902334	1	Kit, Quik Welder (See Items 101-120 for Breakdown)	
2		Ref	Quik Welder Ready Installations (See Items 201-204 for	
2	0274154	1	1930ES	
2	0274155	1	2030ES	
2	0274156	1	2630ES	
2	0274157	1	2646ES/3246ES	
	2902334	Ref	**QUIK WELDER KIT**	B
101	0861527	1	Box, Welder Disconnect	
102	1320224	4	Clamp	
103	1705213	1	Decal – On/Off	
104	1705214	1	Decal – Plus/Minus	
105	1705305	1	Decal – Weld Lead	
106	1705953	1	Decal – Weight	
107	3290606	8	Nut M6	
108	3300048	2	Nut 3/4	
109	4010608	6	Screw M6 x 16	
110	4010614	2	Screw M6 x 30	
111	4340938	1	Mount, Quik Welder	
112	4360155	1	Switch, Master Disconnect	
113	4460328	2	Terminal, Connector	
114	4530021	1	Welder	
114A	7027303	2	Connector, Female	
115	4923048	1	Cable, Quik Welder Assembly	
116	1060957	1	Cable, Welder	
117	1060379	3	Cable, Lanyard	
118	3421453	3	Pin	
119	3760170	3	Ring	
120	1705754	1	Decal - JLG	
		Ref	**QUIK WELDER READY INSTALLATIONS**	
	0274154	Ref	**1930ES**	B
	0274155	Ref	**2030ES**	B
	0274156	Ref	**2630ES**	B
	0274157	Ref	**2646ES/3246ES**	B
201	2030010	1	Extinguisher, Fire	
202	3290606	6	Nut M6	
203	4010617	2	Screw M6 x 45	
203	4010608	2	Screw M6 x 16	
204		Ref	Cable, Quik Welder Power Options:	
204	4923049	1	1930ES	
204	4923050	1	2030ES	
204	4923051	1	2630ES	
204	4923052	1	2646ES/3246ES	

SECTION 5 - CYLINDER

SECTION 5 - CYLINDER

FIGURE 5-1. LIFT CYLINDER ASSEMBLY

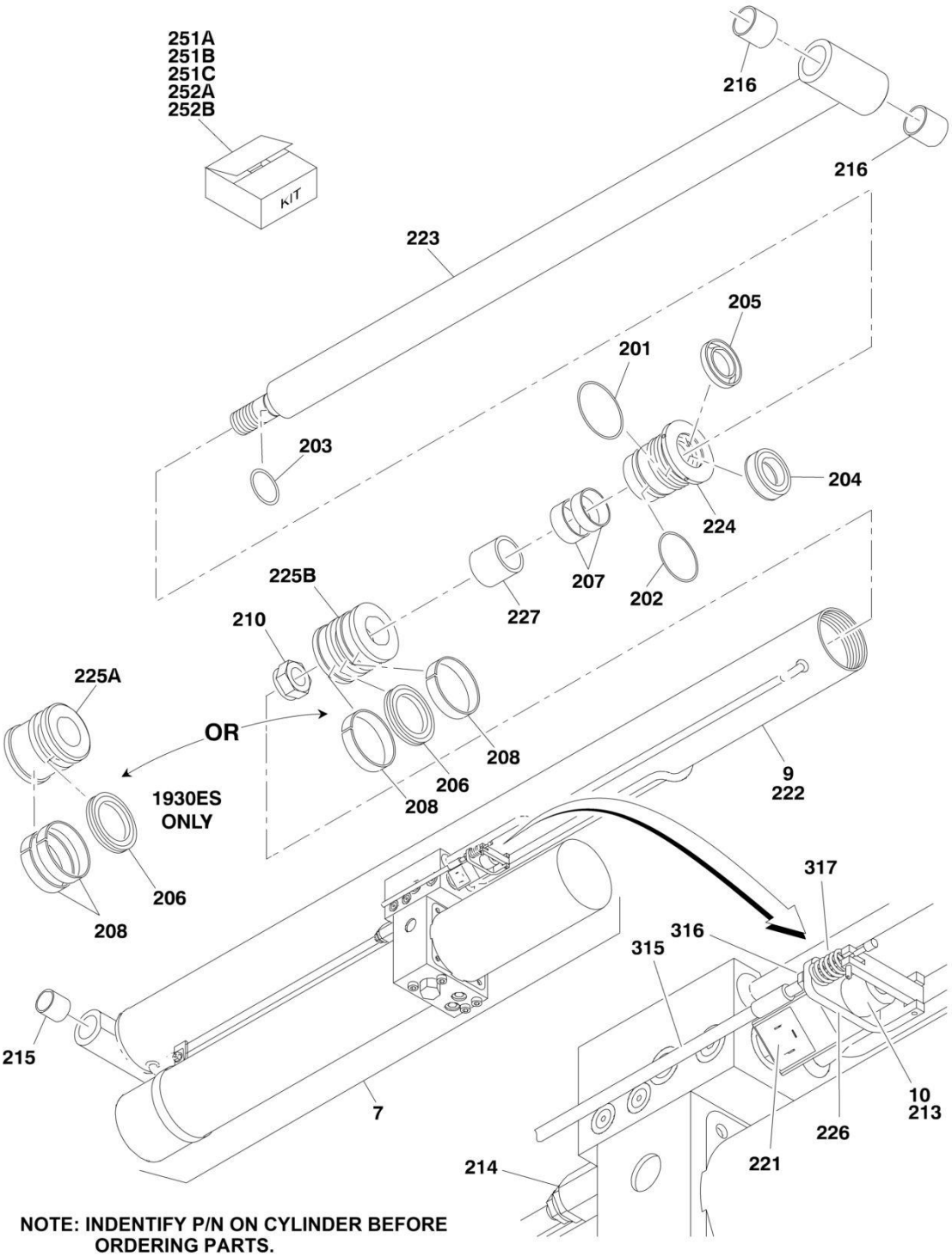

NOTE: INDENTIFY P/N ON CYLINDER BEFORE ORDERING PARTS.

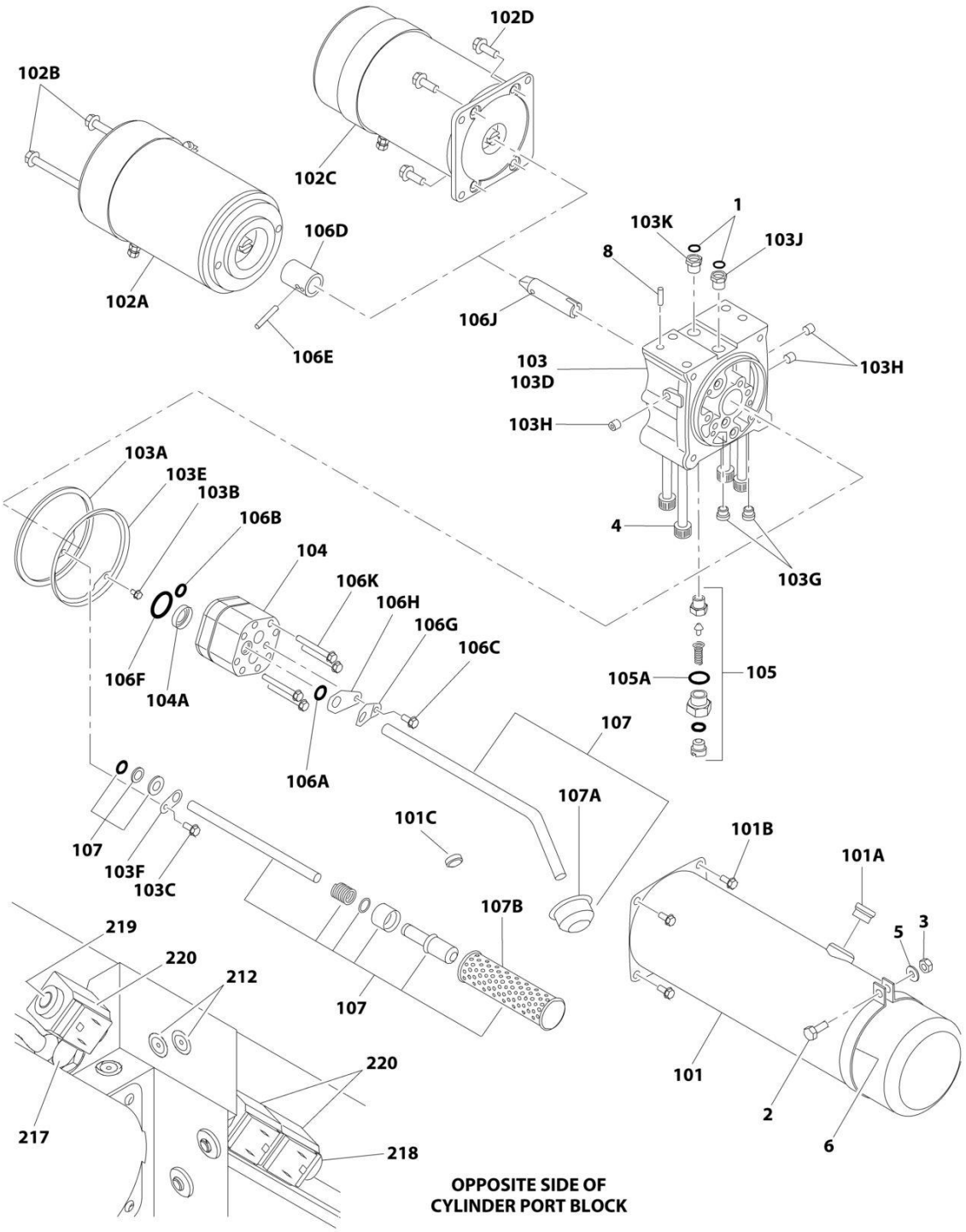

NOTE: INDENTIFY P/N ON CYLINDER BEFORE ORDERING PARTS.

FIGURE 5-1. LIFT CYLINDER ASSEMBLY

ITEM	PART NUMBER	QTY	DESCRIPTION	REV
		Ref	**LIFT CYLINDER ASSEMBLY**	
	1684265	Ref	**Lift Cylinder Assembly 1930ES**	D
	1684258	Ref	**Lift Cylinder Assembly 2030ES**	C
	1684302	Ref	**Lift Cylinder Assembly 2630ES**	B
	1684260	Ref	**Lift Cylinder Assembly 2646ES**	E
	1684257	Ref	**Lift Cylinder Assembly 3246ES**	E
1	7023577	2	O-Ring	
2	See Note	NSS	Capscrew (All except 1930ES Models) (Note: Not Available - Purchase Locally)	
3	See Note	NSS	Locknut (All except 1930ES Models) (Note: Not Available - Purchase Locally)	
4	7023589	4	Capscrew	
5	See Note	NSS	Flatwasher (All except 1930ES Models) (Note: Not Available - Purchase Locally)	
6	7023539	1	Clamp (All except 1930ES Models)	
7		Ref	Power Pack Assembly - Complete Options (See Items 101-107B for Breakdown):	
7	7023558	1	Power Pack Assembly - Complete 1930ES	
7	7023549	1	Power Pack Assembly - Complete 2030ES	
7	7023568	1	Power Pack Assembly - Complete 2630ES	
7	7023557	1	Power Pack Assembly - Complete 2646ES	
7	7023535	1	Power Pack Assembly - Complete 3246ES	
8		Ref	Pin, Alignment Options:	
8	70003646	2	Pin, Dowel	
8	70003645	2	Roll Pin	
9	See Note	NSS	Cylinder Assembly Only (Note: Purchase Individual Components - See Items 201-227 for Breakdown)	
10	See Note	NSS	Plug, Brass (Orifice) (Note: Not Available for Purchase)	
11	7019864	1	Setscrew (1930ES Only) (Not Shown)	
		Ref	**POWER PACK ASSEMBLY - COMPLETE**	
	7023558	1	**Power Pack Assembly - Complete 1930ES (1684265 Cylinder)**	
	7023549	1	**Power Pack Assembly - Complete 2030ES (1684258 Cylinder)**	
	7023568	1	**Power Pack Assembly - Complete 2630ES (1684302 Cylinder)**	
	7023557	1	**Power Pack Assembly - Complete 2646ES (1684260 Cylinder)**	
	7023535	1	**Power Pack Assembly - Complete 3246ES (1684257 Cylinder)**	
101		Ref	Tank Kit Options (Note: Includes Tank and Items 101A-101C):	
101	7023569	1	Tank Kit 1930ES	
101	7023587	1	Tank Kit 2030ES	
101	7023585	1	Tank Kit 2630ES	
101	7023578	1	Tank Kit 2646ES	
101	7023583	1	Tank Kit 3246ES	
101A	7023593	1	Plug, Fill	
101B	See Note	NSS	Screw (Note: Use Item 101)	
101C	See Note	NSS	Magnet (Note: Use Item 101)	
102		Ref	Motor Options:	
102A	7023570	1	1930ES/2030ES/2630ES Motor	
102A	70000658	1	Brush Kit - 7023570 Motor	

ITEM	PART NUMBER	QTY	DESCRIPTION	REV
102B	See Note	NSS	Bolt (Note: Purchase Locally or Use Item 102A)	
102C	7023579	1	2646ES/3246ES Motor	
102C	70000659	1	Brush Kit - 7023579 Motor	
102D	See Note	NSS	Bolt M8 x 22 (Note: Purchase Locally or Use Item 106J)	
102D	See Note	NSS	Washer (Note: Purchase Locally or Use Item 106J)	
103	7023571	1	Adapter Kit	
103A	70000335	1	O-Ring	
103B	See Note	NSS	Screw (Note: Use Item 103)	
103C	See Note	NSS	Screw (Note: Use Item 103)	
103D	See Note	NSS	Adapter (Note: Use Item 103)	
103E	See Note	1	Seal (Note: Use Item 252A or 252B)	
103F	See Note	NSS	Retainer (Note: Use Item 103)	
103G	2220883	2	Plug	
103H	See Note	NSS	Plug (Note: Use Item 103)	
103J	See Note	NSS	Breather 9/16 - 12UNC (Note: Use Item 103)	
103K	See Note	NSS	Breather 9/16 - 18SAE (Note: Use Item 103)	
104		Ref	Pump Options:	
		Ref	**Note: Shaft Seal is only Repair Part Available. No Other Service Parts Available - Replace Complete Pump.**	
104	7023572	1	1930ES/2630ES Pump	
104	7023588	1	2030ES Pump	
104	7023580	1	2646ES/3246ES Pump	
104A	See Note	NSS	Seal, Shaft (Note: Use Item 252A or 252B)	
105	7023573	1	Relief Valve Assembly	
105A	7023591	1	Sealing Washer	
106		Ref	Power Pack Miscellaneous Service Parts	
106A	See Note	NSS	Seal (Note: Use Item 106J)	
106B	See Note	1	Seal (Note: Use Item 106J)	
106C	See Note	NSS	Screw (Note: Use Item 106J)	
106D	See Note	NSS	Sleeve (1930ES/2030ES/2630ES Only) (Note: Use Item 106J)	
106E	See Note	NSS	Roll Pin (1930ES/2030ES/2630ES Only) (Note: Use Item 106J)	
106F	See Note	NSS	Seal (Note: Use Item 106J, 252A or 252B)	
106G	See Note	NSS	Tab, Locking (Note: Use Item 106J)	
106H	See Note	NSS	Retainer, Tube (Note: Use Item 106J)	
106J		Ref	Coupler Kit Options:	
106J	7023574	1	Coupler Kit 1930ES/2030ES/2630ES (Includes Items 106A-106K)	
106J	7023581	1	Coupler Kit 2646ES/3246ES (Includes Items 106A-106K)	
106K	See Note	NSS	Bolt - 1930ES/2030ES/2630ES (Note: Use Item 106J)	
106K	See Note	NSS	Stud M8 x 110 - 2646ES/3246ES (Note: Use Item 106J)	
106K	See Note	NSS	Washer - 2646ES/3246ES (Note: Use Item 106J)	
106K	See Note	NSS	Nut M8 - 2646ES/3246ES (Note: Use Item 106J)	
107		Ref	Tube Kit Options:	
107	7023575	1	Tube Kit 1930ES	
107	7023586	1	Tube Kit 2030ES/2630ES	
107	7023582	1	Tube Kit 2646ES	
107	7023584	1	Tube Kit 3246ES	
107A	See Note	NSS	Strainer (Note: Use Item 107)	
107B	7023576	1	Filter Element (Includes Seal)	
		Ref	**CYLINDER ASSEMBLY ONLY COMPONENTS**	
201	See Note	NSS	O-Ring (Note: Use Item 251A, 251B or 251C)	

ITEM	PART NUMBER	QTY	DESCRIPTION	REV
202	See Note	NSS	O-Ring (Note: Use Item 251A, 251B or 251C)	
203	See Note	NSS	O-Ring (Note: Use Item 251A, 251B or 251C)	
204	See Note	NSS	Seal (Note: Use Item 251A, 251B or 251C)	
205	See Note	NSS	Wiper (Note: Use Item 251A, 251B or 251C)	
206	See Note	NSS	Seal (Note: Use Item 251A, 251B or 251C) (Note: This is a 3 piece seal. Assembly may be required)	
207	See Note	NSS	Ring, Wear (Note: Use Item 251A, 251B or 251C)	
208	See Note	NSS	Ring, Wear (Note: Use Item 251A, 251B or 251C)	
210	70004193	1	Locknut	
211	2220882	4	Plug, Steel (SAE #3) (Not Shown)	
212	2220883	8	Plug, Steel (SAE #4)	
213	7023543	1	Valve, Proportional (Lift Down)	
214	7023542	1	Valve, Relief (Steer)	
215		Ref	Bushing Options:	
215	0962257	2	Bushing 1930ES/2030ES/2630ES	
215	0962006	2	Bushing 2646ES/3246ES	
216		Ref	Bushing Options:	
216	0962257	2	Bushing 1930ES/2030ES/2630ES	
216	0962181	2	Bushing 2646ES/3246ES	
217	7023538	1	Valve, Check	
218	7023537	1	Directional Control Valve (Steer)	
219	7023536	1	Directional Control Valve (Lift Up)	
220	7023541	3	Coil (Steer and Lift Up)	
221	7023540	1	Coil (Lift Down)	
222		Ref	Barrel Options:	
222	7023553	1	Barrel 1930ES	
222	7023548	1	Barrel 2030ES/2630ES	
222	7023556	1	Barrel 2646ES	
222	7023534	1	Barrel 3246ES	
223		Ref	Rod Options:	
223	7023552	1	Rod 1930ES	
223	7023547	1	Rod 2030ES/2630ES	
223	7023555	1	Rod 2646ES	
223	7023533	1	Rod 3246ES	
224		Ref	Head Options:	
224	7023551	1	Head 1930ES	
224	7023546	1	Head 2030ES/2630ES	
224	7023532	1	Head 2646ES/3246ES	
225		Ref	Piston Options:	
225A	7023550	1	Piston 1930ES	
225B	7023545	1	Piston 2030ES/2630ES	
225B	7023531	1	Piston 2646ES/3246ES	
226	7023530		Emergency Release Assembly	
227		Ref	Spacer Options:	
227	Not Required	0	Spacer 1930ES/2030ES/2630ES/2646ES	
227	7023529	1	Spacer 3246ES	
		Ref	**SEAL KIT OPTIONS**	
251		Ref	Seal Kit - Cylinder Options (Includes Items 201-208):	
251A	7023554	1	Seal Kit - Cylinder 1930ES	
251B	7023544	1	Seal Kit - Cylinder 2030ES/2630ES	
251C	7023528	1	Seal Kit - Cylinder 2646ES/3246ES	

ITEM	PART NUMBER	QTY	DESCRIPTION	REV
252		Ref	Seal Kit - Reservoir/Pump Options (Includes 103A, 103E, 104A, 106B & 106F):	
252A	70001709	1	Seal Kit - Reservoir/Pump 1930ES/2030ES/2630ES	
252B	70001982	1	Seal Kit - Reservoir/Pump 2646ES/3246ES	
		Ref	**MANUAL DESCENT COMPONENTS**	
	0272735	Ref	**Manual Descent Components 1930ES**	H
	0272730	Ref	**Manual Descent Components 2030ES**	D
	0272608	Ref	**Manual Descent Components 2630ES**	D
	0272623	Ref	**Manual Descent Components 2646ES**	F
	0272622	Ref	**Manual Descent Components 3246ES**	F
315		Ref	Cable, Pull Options:	
315	1061036	1	Cable, Pull 1930ES	
315	1061035	NLA	Cable, Pull 2030ES/2630ES (Use p/n 1061036)	
315	1061034	1	Cable, Pull 2646ES/3246ES	
315	7020218	1	T-Handle (With 1/4in-20 Threads)	
315	70001878	1	T-Handle (With 5mm Threads)	
316	3321402	1	Nut, Jam 1/4in-18NF	
317	4160078	1	Spring	

FIGURE 5-2. STEER CYLINDER ASSEMBLY

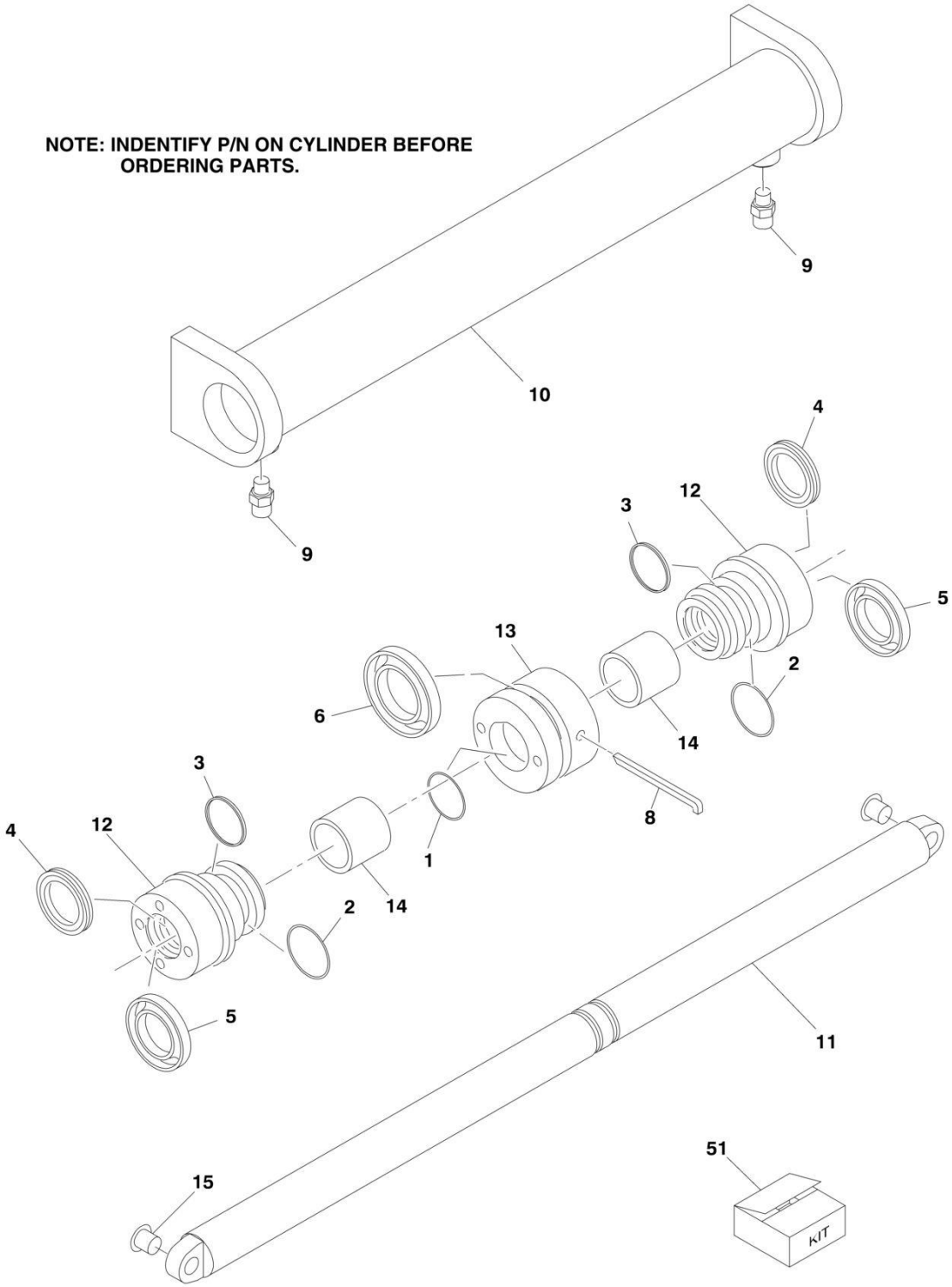

FIGURE 5-2. STEER CYLINDER ASSEMBLY

ITEM	PART NUMBER	QTY	DESCRIPTION	REV
		Ref	**STEER CYLINDER ASSEMBLY**	
	1684237	Ref	**Steer Cylinder Assembly 1930ES/2030ES/2630ES**	D
	1684263	Ref	**Steer Cylinder Assembly 2646ES/3246ES**	E
1	See Note	NSS	O-Ring (Note: Use Item 51)	
2	See Note	NSS	O-Ring (Note: Use Item 51)	
3	See Note	NSS	Ring, Back-up (Note: Use Item 51)	
4	See Note	NSS	Seal (Note: Use Item 51)	
5	See Note	NSS	Wiper (Note: Use Item 51)	
6	See Note	NSS	Seal (Note: Use Item 51)	
8	7023564	1	Ring, Retaining	
9	2110404	2	Fitting, Straight Adapter	
10		Ref	Tube Assembly Options:	
10	7023563	1	Tube Assembly 1930ES/2030ES/2630ES	
10	7023567	1	Tube Assembly 2646ES/3246ES	
11		Ref	Rod Options:	
11	7023562	1	Rod 1930ES/2030ES/2630ES	
11	7023566	1	Rod 2646ES/3246ES	
12	7023561	2	Head	
13	7023560	1	Piston	
14		Ref	Spacer Options:	
14	Not Required	0	Spacer 1930ES/2030ES/2630ES	
14	7023565	2	Spacer 2646ES/3246ES	
15	0440259	2	Bushing	
51	7023559	1	Seal Kit - Cylinder (Includes Items 1-6)	

SECTION 6 - HYDRAULIC

FIGURE 6-1. HYDRAULIC DIAGRAM

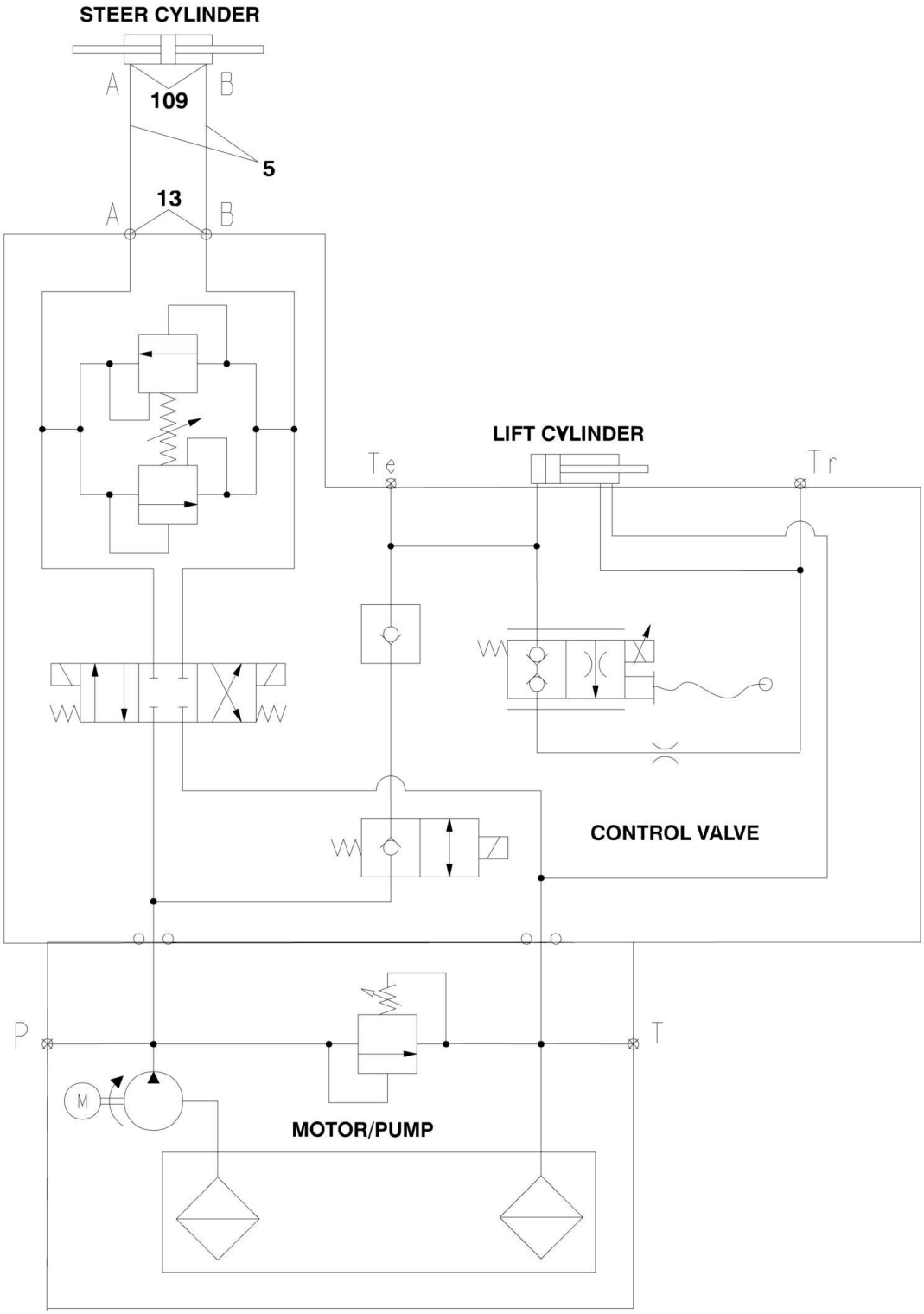

FIGURE 6-1. HYDRAULIC DIAGRAM

ITEM	PART NUMBER	QTY	DESCRIPTION	REV
		Ref	**HYDRAULIC COMPONENTS**	
	0272371	Ref	**Steer Hydraulics (1930ES)**	F
	0273227	Ref	**Steer Hydraulics (2030ES/2630ES)**	C
	0272372	Ref	**Steer Hydraulics (2646ES/3246ES)**	F
	2792599	Ref	**Hydraulic Schematic**	C
5		Ref	Hose Options:	
5	2753882	2	Hose 1930ES/2030ES/2630ES	
5	2753883	2	Hose 2646ES/3246ES	
13	2110404	2	Fitting, Straight	
		Ref	**STEER CYLINDER ASSEMBLY**	
	1684237	Ref	**Steer Cylinder Assembly 1930ES/2030ES/2630ES**	D
	1684263	Ref	**Steer Cylinder Assembly 2646ES/3246ES**	D
109	2110404	2	Fitting, Straight Adapter	

SECTION 7 - ELECTRICAL

FIGURE 7-1. ELECTRICAL SCHEMATIC

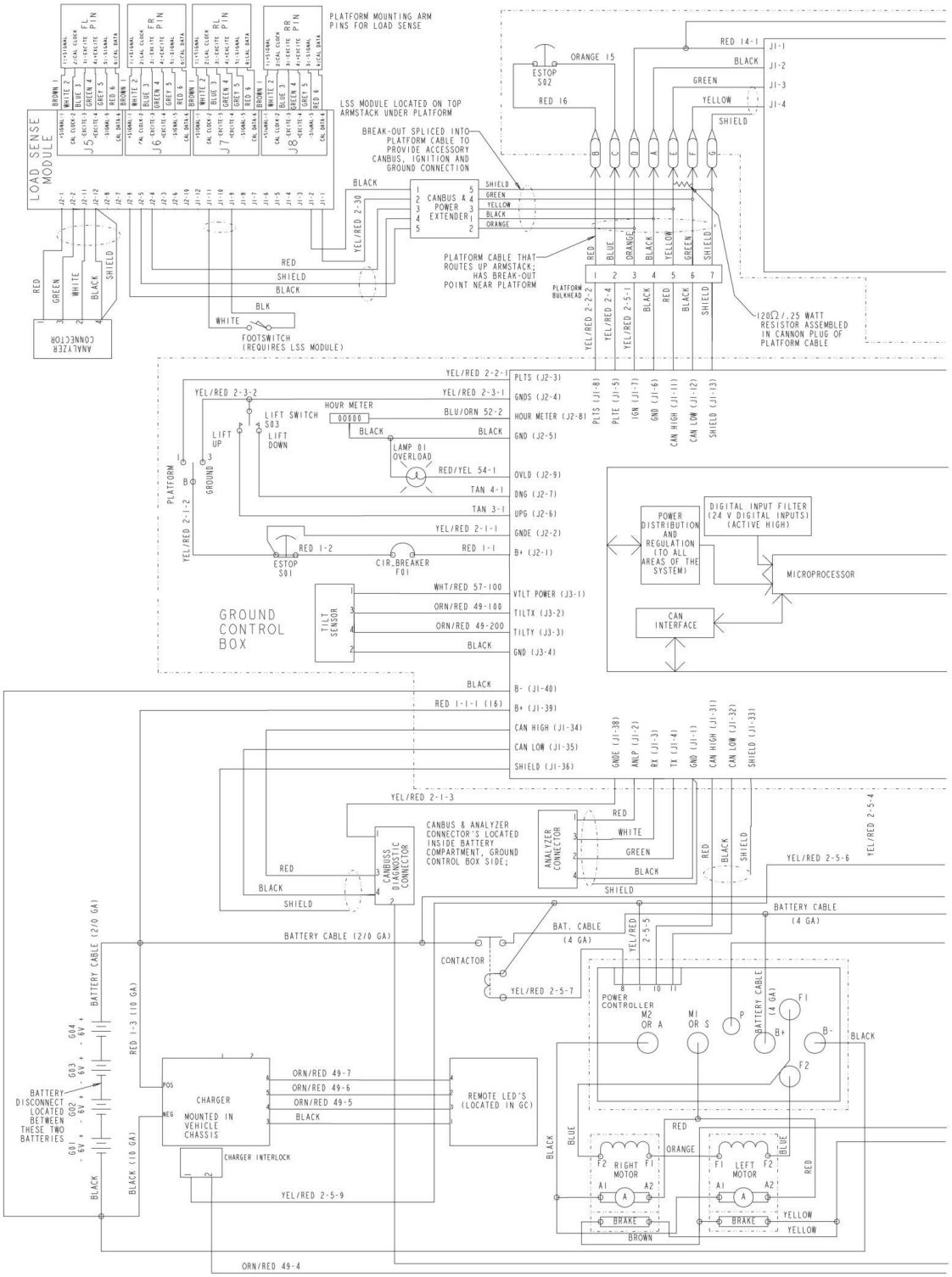

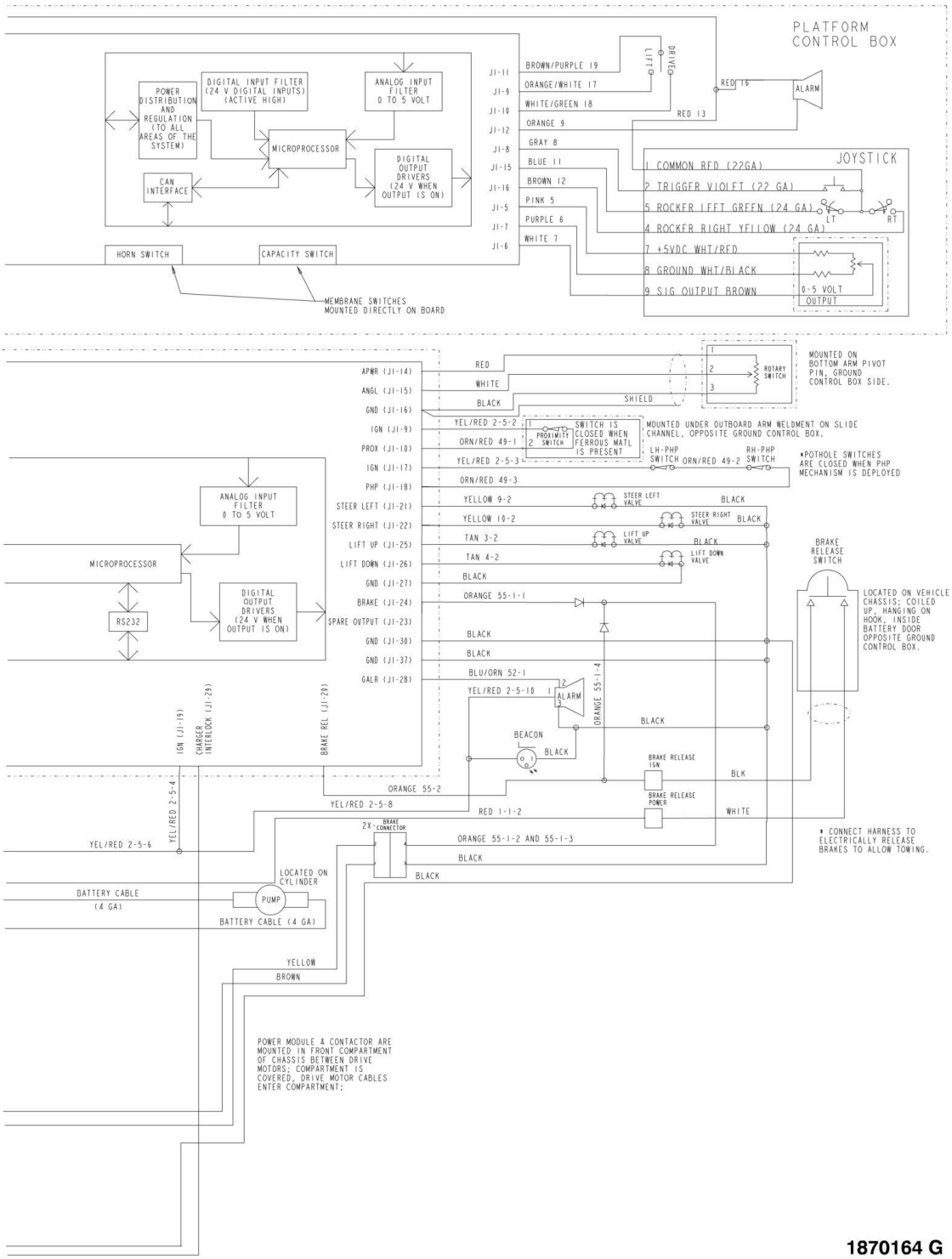
PLATFORM CONTROL BOX
POWER DISTRIBUTION AND REGULATION (TO ALL AREAS OF THE SYSTEM)
DIGITAL INPUT FILTER (24 V DIGITAL INPUTS) (ACTIVE HIGH)
ANALOG INPUT FILTER 0 TO 5 VOLT
MICROPROCESSOR
DIGITAL OUTPUT DRIVERS (24 V WHEN OUTPUT IS ON)
CAN INTERFACE
HORN SWITCH
CAPACITY SWITCH
MEMBRANE SWITCHES MOUNTED DIRECTLY ON BOARD
J1-11 BROWN/PURPLE 19
J1-9 ORANGE/WHITE 17
J1-10 WHITE/GREEN 18
J1-12 ORANGE 9
J1-8 GRAY 8
J1-15 BLUE 11
J1-16 BROWN 12
J1-5 PINK 5
J1-7 PURPLE 6
J1-6 WHITE 7
LIFT
DRIVE
RED 16
RED 13
ALARM
JOYSTICK
1 COMMON RED (22GA)
2 TRIGGER VIOLET (22 GA)
5 ROCKER LEFT GREEN (24 GA)
4 ROCKER RIGHT YELLOW (24 GA)
7 +5VDC WHT/RED
8 GROUND WHT/BLACK
9 SIG OUTPUT BROWN
LT
RT
0-5 VOLT OUTPUT
APWR (J1-14)
ANGL (J1-15)
GND (J1-16)
IGN (J1-9)
PROX (J1-10)
IGN (J1-17)
PHP (J1-18)
STEER LEFT (J1-21)
STEER RIGHT (J1-22)
LIFT UP (J1-25)
LIFT DOWN (J1-26)
GND (J1-27)
BRAKE (J1-24)
SPARE OUTPUT (J1-23)
GND (J1-30)
GND (J1-37)
GALR (J1-28)
RED
WHITE
BLACK
SHIELD
ROTARY SWITCH
MOUNTED ON BOTTOM ARM PIVOT PIN, GROUND CONTROL BOX SIDE.
YEL/RED 2-5-2
ORN/RED 49-1
PROXIMITY SWITCH
SWITCH IS CLOSED WHEN FERROUS MATL IS PRESENT
MOUNTED UNDER OUTBOARD ARM WELDMENT ON SLIDE CHANNEL, OPPOSITE GROUND CONTROL BOX.
YEL/RED 2-5-3
LH-PHP SWITCH
ORN/RED 49-2
RH-PHP SWITCH
*POTHOLE SWITCHES ARE CLOSED WHEN PHP MECHANISM IS DEPLOYED
ORN/RED 49-3
YELLOW 9-2
STEER LEFT VALVE
YELLOW 10-2
STEER RIGHT VALVE
TAN 3-2
LIFT UP VALVE
TAN 4-2
LIFT DOWN VALVE
ORANGE 55-1-1
BLU/ORN 52-1
YEL/RED 2-5-10
ALARM
ORANGE 55-1-4
BEACON
BRAKE RELEASE SWITCH
LOCATED ON VEHICLE CHASSIS; COILED UP, HANGING ON HOOK, INSIDE BATTERY DOOR OPPOSITE GROUND CONTROL BOX.
BRAKE RELEASE IGN
BRAKE RELEASE POWER
BLK
WHITE
ANALOG INPUT FILTER 0 TO 5 VOLT
MICROPROCESSOR
RS232
DIGITAL OUTPUT DRIVERS (24 V WHEN OUTPUT IS ON)
IGN (J1-19)
CHARGER INTERLOCK (J1-29)
BRAKE REL (J1-20)
YEL/RED 2-5-4
ORANGE 55-2
YEL/RED 2-5-8
RED 1-1-2
2X BRAKE CONNECTOR
YEL/RED 2-5-6
ORANGE 55-1-2 AND 55-1-3
* CONNECT HARNESS TO ELECTRICALLY RELEASE BRAKES TO ALLOW TOWING.
LOCATED ON CYLINDER
BATTERY CABLE (4 GA)
PUMP
BATTERY CABLE (4 GA)
YELLOW
BROWN
POWER MODULE & CONTACTOR ARE MOUNTED IN FRONT COMPARTMENT OF CHASSIS BETWEEN DRIVE MOTORS; COMPARTMENT IS COVERED, DRIVE MOTOR CABLES ENTER COMPARTMENT;

1870164 G

FIGURE 7-2. ELECTRICAL COMPONENTS INSTALLATION

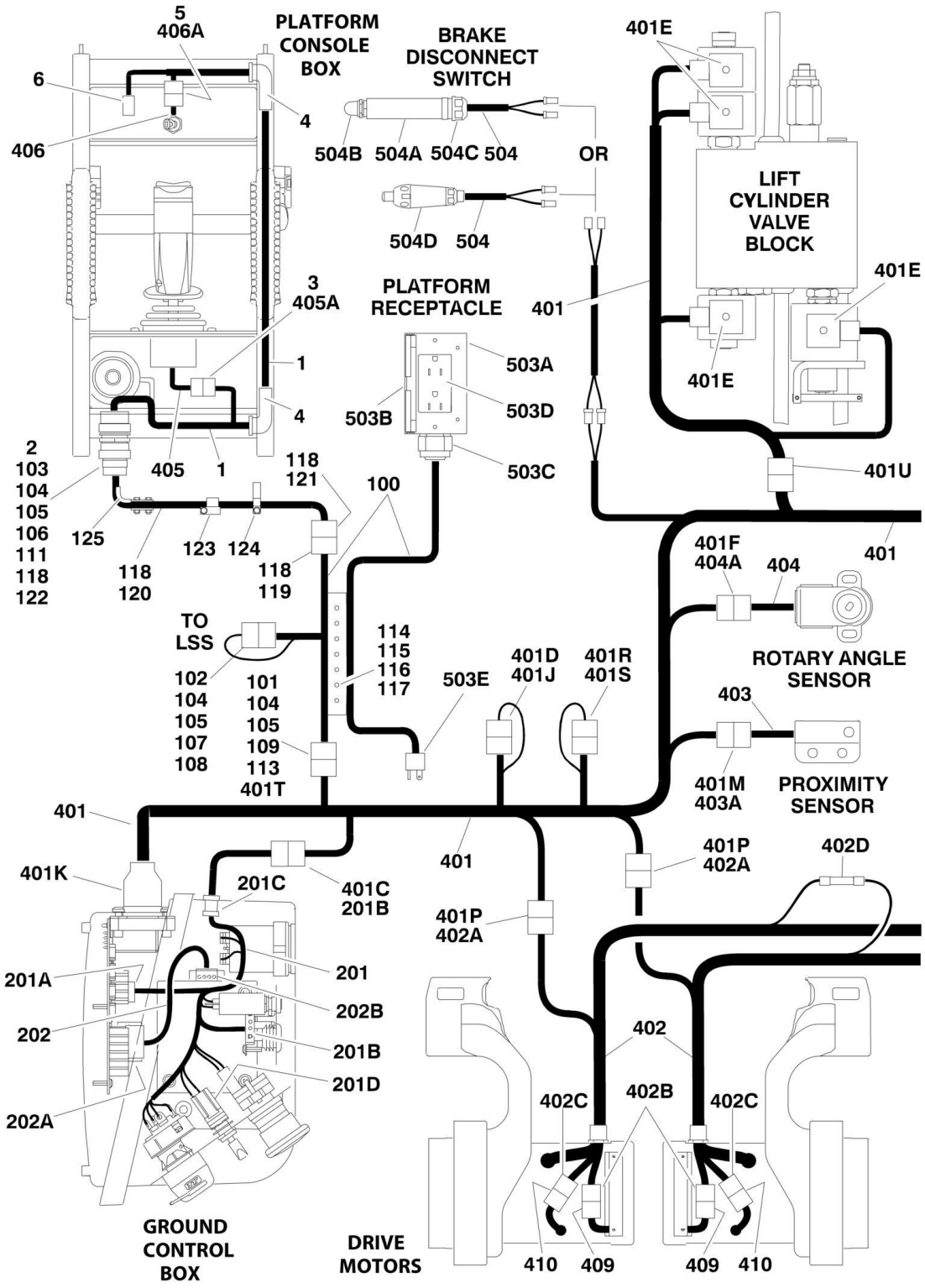

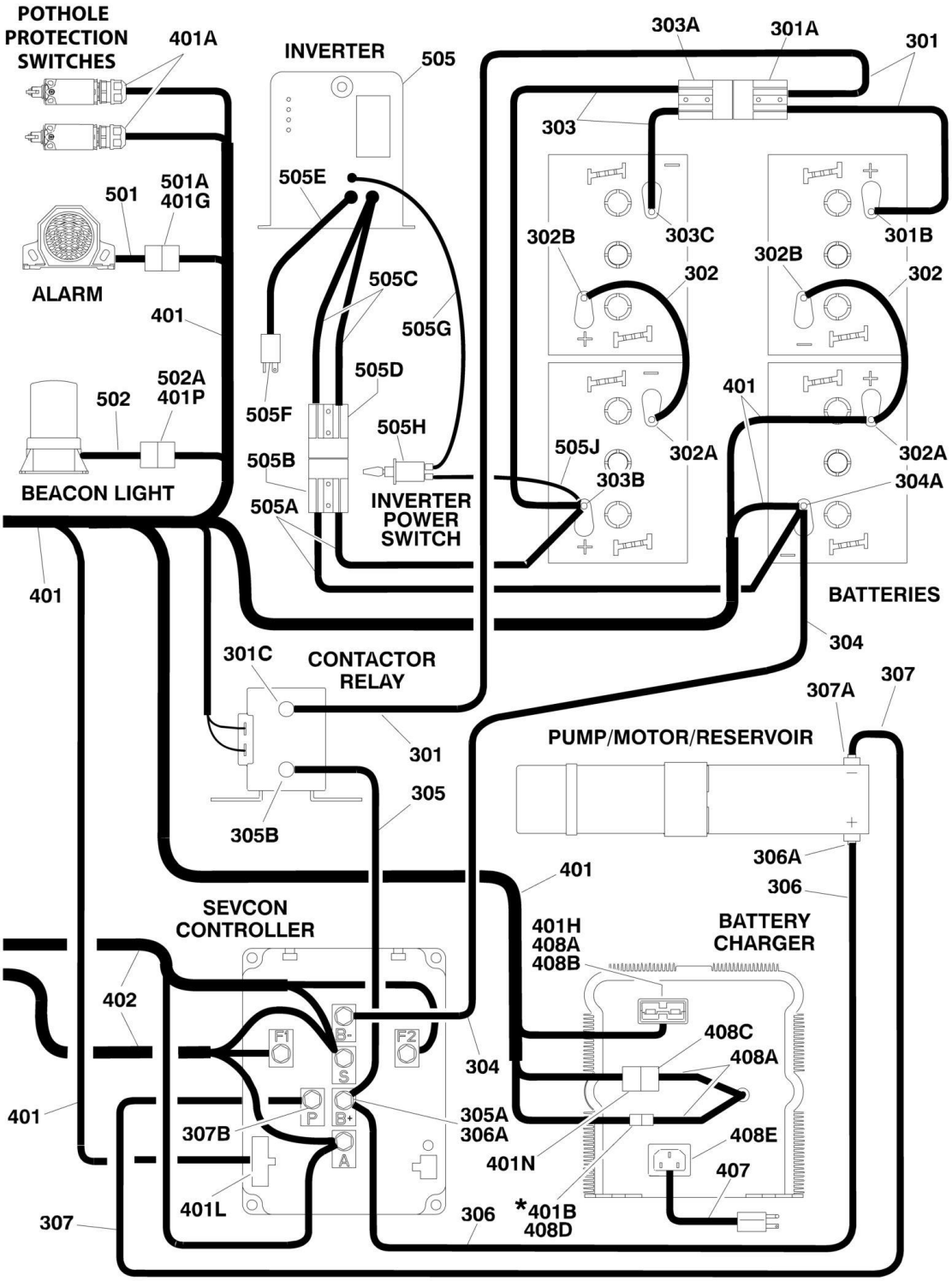

*NOTE: THIS CONNECTION USED ONLY WHEN FOOTSWITCH OR BATTERY CHARGER INTERLOCK OPTIONS ARE REQUIRED.

FIGURE 7-2. ELECTRICAL COMPONENTS INSTALLATION

ITEM	PART NUMBER	QTY	DESCRIPTION	REV
		Ref	**CONSOLE BOX COMPONENTS**	
1	4922870	1	Platform Box Harness	A
2	4461016	1	Connector - 14 Position	
2	4460464	6	Pin, Male	
2	4460466	8	Plug, Sealing	
2	4460496	1	Lockwasher	
2	4460497	1	Nut, Panel	
3	4460265	1	Plug, Male - 9 Position	
3	4460267	8	Pin, Male	
4	2540042	2	Grommet 90	
5	See Note	NSS	Receptacle, Female - 3 Position (Note: Not Available for Purchase)	
6	4461057	1	Plug, Male - 16 Position	
		Ref	**PLATFORM CABLES INSTALLATION**	
	0272832	Ref	**Platform Cables Installation 1930ES**	G
	0272833	Ref	**Platform Cables Installation 2030ES**	G
	0272834	Ref	**Platform Cables Installation 2630ES**	G
	0272835	Ref	**Platform Cables Installation 2646ES/3246ES**	G
100		Ref	Platform to Ground Harness Options:	
100		Ref	**Platform to Ground Harness 1930ES**	
100	1061028	NLA	ANSI, ANSI Export, Japanese and UL Specs	
		Ref	**(Note: For complete Ground to Platform Control Box Harness, purchase p/ns 1001094154 & Item 118 p/n 1001104466. For Platform to Ground Cable purchase only p/n 1001094154. See additional notes above Item 101)**	
100	1061028	NLA	Australian and CE Specs	
		Ref	**(Note: For complete Ground to Platform Control Box Harness, purchase p/ns 1001094332 & Item 118 p/n 1001104466. For Platform to Ground Cable purchase only p/n 1001094332. See additional notes above Item 101)**	
100		Ref	**Platform to Ground Harness 2030ES**	
100	1061029	NLA	ANSI, ANSI Export, Japanese and UL Specs	
		Ref	**(Note: For complete Ground to Platform Control Box Harness purchase p/ns 1001094155 & Item 118p/n 1001104467. For Platform to Ground Cable purchase only p/n 1001094155. See additional notes above Item 101)**	
100	1061029	NLA	Australian and CE Spec	
		Ref	**(Note: For complete Ground to Platform Control Box Harness, purchase p/ns 1001094333 & Item 118 p/n 1001104467. For Platform to Ground Cable purchase only p/n 1001094333. See additional notes above Item 101)**	
100		Ref	**Platform to Ground Harness 2630ES**	
100	1061030	NLA	ANSI, ANSI Export, Japanese and UL Specs	
		Ref	**(Note: For complete Ground to Platform Control Box Harness, purchase p/ns 1001094156 & Item 118 p/n 1001104467. For Platform to Ground Cable purchase only p/n 1001094156. See additional notes above Item 101)**	
100	1061030	NLA	Australian and CE Specs	
		Ref	**(Note: For complete Ground to Platform Control Box Harness, purchase p/ns 1001094334 & Item 118 p/n 1001104467. For Platform to Ground Cable purchase only p/n 1001094334. See additional notes above Item 101)**	
100		Ref	**Platform to Ground Harness 2646ES/3246ES**	
100	1061031	NLA	ANSI, ANSI Export, Japanese and UL Specs	

ITEM	PART NUMBER	QTY	DESCRIPTION	REV
		Ref	**(Note: For complete Ground to Platform Control Box Harness, purchase p/ns 1001094157 & Item 118 p/n 1001104468. For Platform to Ground Cable purchase only p/n 1001094157. See additional notes above Item 101)**	
100	1061031	NLA	Australian and CE Spec	
		Ref	**(Note: For complete Ground to Platform Control Box Harness, purchase p/ns 1001094335 & Item 118 p/n 1001104468. For Platform to Ground Cable purchase only p/n 1001094335. See additional notes above Item 101)**	
		Ref	**Note: If machine is equipped with platform rail padding limit switches harness p/n 4923250, replace with p/n 4923632 when installing complete Ground to Platform Control Box Harness.**	
		Ref	**Note: If machine is equipped with overload sensing harness p/n 4922908, replace with p/n 4923228 when installing complete Ground to Platform Control Box Harness.**	
		Ref	**Note: Items 101-111 are Components for Original Equipment Platform to Ground Cable. See Items 119-122 if equipped with Replacement Coiled Harness Cable.**	
101	0840058	1	Boot, 8 Position	
102	0840059	1	Boot, 6 Position	
103	3730119	1	Resistor	
104	4460465	19	Socket, Female	
105	4460466	9	Plug, Sealing	
106	4460754	1	Connector -14 Position	
107	4460894	1	Plug, Male - 6 Position	
108	4460899	1	Receptacle, Female - 6 Position	
109	4460930	1	Plug, Male - 8 Position	
111	4460493	1	Cap, Dust	
112	1320318	AR	Clamp, Hose (1930ES/2646ES/3246ES Only - Not Shown)	
113	0100048	AR	Grease, Dielectric	
114	1380158	AR	Retainer	
115	4740545	AR	Washer, Spec Cable	
116	0760610	2	Screw M6 x 20	
117	3290607	2	Nut M6	
118		Ref	Platform to Platform Control Box Harness Repair Kit with Coiled Cable (Includes Items 119-125)	
118	2915251	NLA	Platform to Platform Control Box Harness 1930ES (Use Repair Kit with Coiled Cable p/n 1001104466)	A
118	2915252	NLA	Platform to Platform Control Box Harness 2030ES/2630ES (Use Repair Kit with Coiled Cable p/n 1001104467)	A
118	2915253	NLA	Platform to Platform Control Box Harness 2646ES/3246ES (Use Repair Kit with Coiled Cable p/n 1001104468)	A
119	4460930	1	Plug, Male - 8 Position	
119	4460465	4	Socket, Female	
119	4460944	3	Socket, Female (Gold)	
119	4460466	1	Plug, Sealing	
119	0840061	1	Boot, 8 Position Plug	
119	2820028	AR	Heat Shrink	
120		Ref	Coiled Cable Harness Assembly Options:	
120	2915251	NLA	Coiled Cable Harness Assembly 1930ES (Use p/n 1001096705)	A
120	2915252	NLA	Coiled Cable Harness Assembly 2030ES/2630ES (Use p/n 1001096706)	A
120	2915253	NLA	Coiled Cable Harness Assembly 2646ES/3246ES (Use p/n 1001096707)	A

ITEM	PART NUMBER	QTY	DESCRIPTION	REV
121	4460931	1	Receptacle, Female - 8 Position	
121	4460464	4	Pin, Male	
121	4460943	3	Pin, Male (Gold)	
121	4460466	1	Plug, Sealing	
121	0840058	1	Boot, 8 Position Receptacle	
121	2820026	AR	Insulation, Clear Tubing	
121	2820028	AR	Heat Shrink	
122	4460754	1	Plug, Male -14 Position	
122	4460465	4	Socket, Female	
122	4460944	3	Socket, Female	
122	4460466	4	Plug, Sealing	
122	3730119	1	Resistor	
122	4460493	1	Cap, Dust	
122	2820026	AR	Insulation, Clear Tubing	
123	1001094175	AR	Clamp, Post	
123	4010617	AR	Screw M6 x 45	
123	3290606	AR	Nut, Acorn M6	
124	1001094180	4	Clamp, Rail	
124	0760606	4	Screw M6 x 12	
124	3290606	4	Nut, Acorn M6	
125	1001104465	AR	Hook, Corner	
125	4010617	AR	Screw M6 x 45	
125	3290606	AR	Nut, Acorn M6	
		Ref	**GROUND CONTROL BOX COMPONENTS**	
201	4922865	1	Control Box Harness	E
201A	4460265	1	Plug, Male - 9 Position	
201A	4460268	9	Socket, Female	
201B	4460761	2	Receptacle, Female - 4 Position	
201B	4460267	8	Pin, Male	
201C	See Note	NSS	Grommet (Note: Molded in Part of Harness)	
201D	4460418	1	Receptacle, Female - 3 Position	
201D	4460419	3	Terminal	
202	4922866	1	Tilt Sensor Harness (USA Built Machines) **(Prior to SN 0200117805)**	F
202	4922866	1	Tilt Sensor Harness (Belgium Built Machines) **(Prior to SN 1200001367)**	F
202A	4460321	1	Plug, Male - 4 Position	
202A	4460267	4	Pin, Male	
202B	4460985	1	Plug, Male - 4 Position	
		Ref	**BATTERY CABLE KITS**	
	2902239	Ref	**Battery Cable Kits 1930ES**	D
	2902248	Ref	**Battery Cable Kits 2030ES/2630ES/2646ES/3246ES**	D
301		Ref	Cable, Battery (Contactor and LH Battery to Disconnect)	
301	1060997	1	Cable, Battery (Contactor and LH Battery to Disconnect) 1930ES	D
301	1061008	1	Cable, Battery (Contactor and LH Battery to Disconnect) 2030ES/2630ES/2646ES/3246ES	D
301A	4460618	1	Connector, Anderson	
301A	See Note	NSS	Handle, Connector (Note: Not Available for Purchase)	
301B	0840048	2	Boot, Terminal (Red)	
301C	0840041	2	Boot, Terminal (Red)	
302	1060998	2	Cable, Battery (Battery Positive to Battery Negative)	D

ITEM	PART NUMBER	QTY	DESCRIPTION	REV
302A	See Note	NSS	Boot, Terminal (Black) (1 Per Cable) (Note: Not Available for Purchase)	
302B	0840048	1	Boot, Terminal (Red) (1 per Cable)	
303		Ref	Cable, Battery (RH Batteries to Disconnect)	
303	1060999	1	Cable, Battery (RH Batteries to Disconnect) 1930ES	D
303	1061010	1	Cable, Battery (RH Batteries to Disconnect) 2030ES/2630ES/2646ES/3246ES	D
303A	4460618	1	Connector, Anderson	
303B	0840048	1	Boot, Terminal (Red)	
303C	See Note	NSS	Boot, Terminal (Black) (Note: Not Available for Purchase)	
304		Ref	Cable, Battery (LH Battery to Connector B-)	
304	1061000	1	Cable, Battery (LH Battery to Connector B-) 1930ES	D
304	1061009	1	Cable, Battery (LH Battery to Connector B-) 2030ES/2630ES/2646ES/3246ES	D
304A	See Note	NSS	Boot, Terminal (Black) (Note: Not Available for Purchase)	
305	1061001	1	Cable, Battery (Contactor to Controller B+)	C
305A	See Note	NSS	Boot, Terminal (Black) (1 Per Cable) (Note: Not Available for Purchase)	
305B	0840041	1	Boot, Terminal (Red) (1 per Cable)	
306		Ref	Cable, Battery (Controller B+ to Motor Positive)	
306	1061015	1	Cable, Battery (Controller B+ to Motor Positive) 1930ES	C
306	1061013	1	Cable, Battery (Controller B+ to Motor Positive) 2030ES/2630ES/2646ES/3246ES	C
306A	0840041	2	Boot, Terminal (Red)	
307		Ref	Cable, Battery (Controller P to Motor Negative)	
307	1061016	1	Cable, Battery (Controller P to Motor Negative) 1930ES	C
307	1061014	1	Cable, Battery (Controller P to Motor Negative) 2030ES/2630ES/2646ES/3246ES	C
307A	See Note	NSS	Boot, Terminal (Black) (Note: Not Available for Purchase)	
307B	0840041	1	Boot, Terminal (Red)	
		Ref	**STANDARD HARNESSES**	
401	4922861	NLA	Chassis/Lift Cylinder Harness (All Models) (See Notes Below)	
401	4923194	NLA	Chassis/Lift Cylinder Harness (1930ES/2030ES/2630ES) (See Notes Below)	
401	4923335	NLA	Chassis/Lift Cylinder Harness (1930ES/2030ES/2630ES) (See Notes Below)	
401	4923195	NLA	Chassis/Lift Cylinder Harness (2646ES/3246ES) (See Notes Below)	
401	4923336	NLA	Chassis/Lift Cylinder Harness (2646ES/3246ES) (See Notes Below)	
401		Ref	**Note: For 1930ES/2030ES/2630ES, Purchase qty 1 each of p/n 4923380 Chassis Harness and p/n 4923270 Lift Cylinder Harness for replacement.**	
401		Ref	**Note: For 2646ES/3246ES, Purchase qty 1 each of p/n 4923381 Chassis Harness and p/n 4923270 Lift Cylinder Harness for replacement.**	
401		Ref	**Note: Connection at Contactor relay may need changed to match relay currently on machine.**	
401	4933315		Diagram, Wiring (Note: This is the wiring diagram for chassis harness p/n 4923194/4923195)	D
401	3990010	2	Diode 6 Amp (Not Shown)	
401A	4360536	NLA	Switch, Limit (Use p/n 4360607)	
401B	4460320	1	Plug, Male - 2 Position (Note: Connection to this plug used only when footswitch or battery interlock options are required)	
401B	4460226	2	Socket, Female	

ITEM	PART NUMBER	QTY	DESCRIPTION	REV
401C	4460321	1	Plug, Male - 4 Position	
401C	4460227	4	Pin, Male	
401D	4460321	1	Plug, Male - 4 Position	
401D	4460226	1	Socket, Female	
401E	4460499	4	DIN Connector	
401F	4460539	1	Plug, Male - 3 Position	
401F	4460465	3	Socket, Female	
401G	4460539	1	Plug, Male - 3 Position	
401G	4460465	2	Socket, Female	
401H	4460648	1	Connector, Anderson	
401J	4460761	1	Receptacle, Female - 4 Position	
401J	4460227	4	Pin, Male	
401K	4460814	1	Plug, Male - 40 Position	
401K	4460465	40	Socket, Female	
401K	0840057	1	Boot	
401L	4460870	1	Plug, Male - 12 Position	
401L	4460877	4	Pin, Male	
401M	4460891	1	Plug, Male - 2 Position	
401M	4460465	2	Socket, Female	
401N	4460894	1	Plug, Male - 6 Position	
401N	4460465	6	Socket, Female	
401N	0840059	1	Boot	
401P	4460897	3	Receptacle, Female - 2 Position	
401P	4460464	6	Pin, Male	
401R	4460930	1	Plug, Male - 8 Position	
401R	4460466	1	Seal, Plug	
401S	4460931	1	Receptacle, Female - 8 Position	
401S	4460464	4	Pin, Male	
401S	0840058	1	Boot	
401T	4460931	1	Receptacle, Female - 8 Position	
401T	4460464	7	Pin, Male	
401T	0840058	1	Boot	
401U		Ref	Components Options (Note: These parts used when updated chassis/lift cylinder harnesses have been installed - See ref. note at Item 401):	
401U	4460899	1	Connector, Female - 6 Position	
401U	4460464	6	Pin Male	
401U	4460894	1	Plug, Male - 6 Position	
401U	4460465	6	Socket, Female	
402		Ref	Drive Motor Harness Options:	
402		Ref	USA Built Machines **(Prior to SN 0200118041)**	
402		Ref	Belgium Built Machines **(Prior to SN 1200001487)**	
402	7024752	NLA	USA Built Machines 1930ES (Note: Drive Motor Harness no longer available. If equipped with Peerless drive motor, purchase Drive Motor Upgrade Kit p/n 2915042. If equipped with Advanced DC Motor, See WHEEL DRIVE ASSEMBLY for Breakdown to identify cable)	
402	7024752	NLA	Belgium Built Machines 1930ES (Note: Drive Motor Harness no longer available. If equipped with Peerless drive motor, purchase Drive Motor Upgrade Kit p/n 2915042. If equipped with Advanced DC Motor, See WHEEL DRIVE ASSEMBLY for Breakdown to identify cable)	
402	7024768	NLA	USA Built Machines 2030ES/2630ES/2646ES/3246ES (Note: Drive Motor Harness no longer available. If equipped with	

ITEM	PART NUMBER	QTY	DESCRIPTION	REV
			Peerless drive motor, purchase Drive Motor Upgrade Kit p/n 2915043. If equipped with Advanced DC Motor, See WHEEL DRIVE ASSEMBLY for Breakdown to identify cable)	
402	7024768	NLA	Belgium Built Machines 2030ES/2630ES/2646ES/3246ES (Note: Drive Motor Harness no longer available. If equipped with Peerless drive motor, purchase Drive Motor Upgrade Kit p/n 2915043. If equipped with Advanced DC Motor, See WHEEL DRIVE ASSEMBLY for Breakdown to identify cable)	
402		Ref	USA Built Machines **(SN 0200118041 through 0200135154)**	
402		Ref	Belgium Built Machines **(SN 1200001487 through 1200004293)**	
402	7024770	NLA	1930ES (Use p/n 1001099628)	
402	7024770	NLA	2030ES/2630ES/2646ES/3246ES (Use p/n 1001099676)	
402	7024775	NLA	2030ES/2630ES/2646ES/3246ES (Use p/n 1001099676)	
402	1001091843	NLA	2030ES/2630ES/2646ES/3246ES (Use p/n 1001091843)	
402A	4460891	2	Plug, Male - 2 Position (1 Per Harness)	
402A	4460465	4	Socket, Female (2 Per Harness)	
402B	70001442	2	Plug, Male - 2 Position (1 Per Harness) (To Brake)	
402B	See Note	NSS	Socket, Female (2 Per Harness) (To Break) (Note: Not Available for Purchase)	
402C	70001443	2	Plug, Male - 2 Position (1 Per Harness) (To Motor)	
402C	70001444	4	Socket, Female (2 Per Harness) (To Motor)	
402D	See Note	NLA	Connector, Butt (Note: Purchase Locally)	
		Ref	**Note: P/N 7024770 Harness is equipped with a connector at this location. When replacing, clip connector and butt splice to Drive Harness from opposite side.**	
403	4360502	1	Proximity Sensor and Harness (Separate Harness Not Available)	
403A	4460897	1	Receptacle, Female - 2 Position	
403A	4460464	2	Pin, Male	
404	4360526	NSS	Rotary Angle Sensor and Harness (Separate Harness Not Available) (Use p/n 1001092354)	
404A	4460536	1	Receptacle, Female - 3 Position	
404A	4460464	3	Pin, Male	
405	See Note	NSS	Joystick, Harness (Note: Purchase Complete Joystick)	
405A	4460266	1	Receptacle, Female - 9 Position	
405A	4460268	8	Socket, Female	
406	4360539	1	Toggle Switch and Harness (Separate Harness Not Available)	
406A	See Note	NSS	Plug, Male - 3 Position (Note: Use Item 406)	
407		Ref	Cable, AC Options:	
407	1060688	1	Cable, AC - Factory Supplied Plug	
407	1060689	1	Cable, AC - Locally Supplied Plug	
408		Ref	Battery Charger Components	
408A		Ref	DC Harness/Cord Set Options:	
408A	7022945	Ref	DC Harness/Cord Set MAC Charger with Breakers on the Side	
408A	7022953	Ref	DC Harness/Cord Set MAC Charger with Breakers on the End	
408B	4460648	1	Plug, Battery Cable	
408C		Ref	Harness with Connector Options:	
408C	7022946	1	Harness with Connector MAC Charger with Breakers on the Side	
408C	7022955	1	Harness with Connector MAC Charger with Breakers on the End	
408C	4460899	1	Connector, Female - 6 Position	
408C	4460464	6	Pin, Male	
408D	4460424	1	Connector, Female - 2 Position (Note: Connection to this plug used only when battery interlock options are required)	

ITEM	PART NUMBER	QTY	DESCRIPTION	REV
408D	4460227	2	Pin, Male	
408E	See Note	NSS	AC Harness/Cord Set (Note: Purchase Complete Battery Charger)	
408E	7018583	1	Connector, Female	
409	See Note	NSS	Harness, Brake (Note: Internal Connections - Purchase Complete Brake)	
409	See Note	NSS	Receptacle, Female - 2 Position (1 Per Harness) (Note: Purchase Complete Brake)	
409	See Note	NSS	Pin, Male (2 Per Harness) (Note: Purchase Complete Brake)	
410	See Note	NSS	Harness, Motor (Note: Internal Connections - Purchase Complete Motor)	
410	See Note	NSS	Receptacle, Female - 2 Position (1 Per Harness) (Note: Internal Connections - Purchase Complete Motor)	
410	See Note	NSS	Pin, Male (2 Per Harness) (Note: Internal Connections - Purchase Complete Motor)	
		Ref	**OPTIONAL HARNESSES**	
501	0140043	1	Alarm and Harness (Separate Harness Not Available)	
501A	4460536	1	Receptacle, Female - 3 Position	
501A	4460464	3	Pin, Male	
502	2920161	1	Beacon Light and Harness (Separate Harness Not Available)	
502A	4460891	1	Plug, Male - 2 Position (1 Per Harness)	
502A	4460465	2	Socket, Female (2 Per Harness)	
503		Ref	Platform Electrical Outlet Components	
503	0272839	Ref	ANSI Spec	H
503	0272843	Ref	ANSI Export/Australian/CE Specs	E
503		Ref	Decal - AC Power	
503	1703464	1	ANSI Spec	
503	3252507	1	ANSI Export/Australian/CE Specs	
503A		Ref	Box, Switch Options:	
503A	0860038	1	Metal Box (ANSI Spec) **(Prior to SN 0200134340)**	
503A	0861731	1	Poly Box (ANSI Spec) **(SN 0200134340 through 0200135154)**	
503A	See Note	NLA	Switch Box (ANSI Export/Australian/CE Spec Machines) (Note: Purchase Locally)	
503A		Ref	Hardware Options:	
503A	3900335	2	Screw M4.8 x 25 (Self Drilling) (Used with Metal Box)	
503A	4010408	4	Screw M4 x 16 (Used with Poly Box)	
503A	3290405	4	Locknut M4 (Used with Poly Box)	
503B		Ref	Cover Options:	
503B	4060700	1	ANSI Spec with Metal Box **(Prior to SN 0200134340)**	
503B	1671207	1	ANSI Spec with Poly Box **(SN 0200134340 through 0200135154)**	
503B	See Note	NLA	ANSI Export/Australian/CE Spec Machines (Note: Purchase Locally)	
503C		Ref	Connector, Strain Relief Options:	
503C	4460071	1	ANSI Spec with Metal Box **(Prior to SN 0200134340)**	
503C	4460662	1	ANSI Spec with Poly Box **(SN 0200134340 through 0200135154)**	
503C	See Note	NLA	ANSI Export/Australian/CE Spec Machines (Note: Purchase Locally)	
503D		Ref	Receptacle, Electrical Options:	
503D	4460346	1	ANSI Spec	
503D	See Note	NLA	ANSI Export/Australian/CE Spec Machines (Note: Purchase Locally)	

ITEM	PART NUMBER	QTY	DESCRIPTION	REV
503E		Ref	Plug, Male Options:	
503E	4460138	1	ANSI Spec	
503E	See Note	NLA	ANSI Export/Australian/CE Spec Machines (Note: Purchase Locally)	
503G	4460315	1	Terminal, Spade (Not Shown)	
		Ref	Receptacle Box Kit Options:	
	See Note	NLA	Metal Box (Note: Use p/n 2902431)	
	2902431	1	Poly Box (Includes Poly Box, Switch Cover, Receptacle and Strain Relief Connector)	
504	4922944	1	Brake Disconnect Harness	E
504	1060680	15 ft/2.7m	Cable, Electrical 18/2	
504A	2560181	1	Handle (USA Built Machines) **(Prior to SN 0200133920)**	
504A	2560181	1	Handle (Belgium Built Machines)	
504B	4360387	1	Switch, Push Button (USA Built Machines) **(Prior to SN 0200133920)**	
504B	4360387	1	Switch, Push Button (Belgium Built Machines)	
504C	4460633	1	Connector, Strain Relief (USA Built Machines) **(Prior to SN 0200133920)**	
504C	4460633	1	Connector, Strain Relief (Belgium Built Machines)	
504D	4360613	1	Switch, Limit (USA Built Machines Only) **(SN 0200133920 through 0200135154)**	
504D	4240003	1	Strap, Cinch (Not Shown)	
505		Ref	Inverter Electrical Components (See SPECIAL OPTIONS SECTIONS for Breakdown for Other Components)	
505	0272876	Ref	Inverter Electrical Components 1930ES	B
505	0273070	Ref	Inverter Electrical Components 2030ES/2630ES	B
505	0273071	Ref	Inverter Electrical Components 2646ES/3246ES	B
505A	1061037	1	Cable, Power - DC (8Ga)	B
505B	4460648	1	Connector, Anderson (50Amp)	
505C	See Note	3 ft/1m	Cable, Power - DC (8Ga) (Note: Not Available for Purchase)	
505D	4460648	1	Connector, Anderson (50Amp)	
505E	See Note	5 ft/1.5m	Cable Electrical -14/3 (Note: Not Available for Purchase)	
505F	4460205	1	Plug, Male 110GFI	
505G	See Note	5 ft/1.5m	Cable, Power (Note: Not Available for Purchase)	
505H	4360482	1	Switch, Toggle	
505J	4922912	1	Harness, Power	A
		Ref	**TOOLS FOR SERVICE (NOT SHOWN)**	
	7002821	1	Crimper, Wire	
	7002823	1	Extractor, Pin - Universal	
	4460467	AR	Extractor, Pin #16 Gauge	
	4460510	AR	Extractor, Pin #12 Gauge	
	7002828	1	Stripper, Wire	
	2901443	1	Analyzer Kit	
	1600244	1	Analyzer	
	1060633	1	Cable, Analyzer	
	4460321	2	Plug, Male - 4 Position	
	4460226	8	Socket, Female	
	1001137005	1	Software Cables Kit	

SECTION 8 - DECALS

FIGURE 8-1. DECAL INSTALLATION (ANSI SPEC)

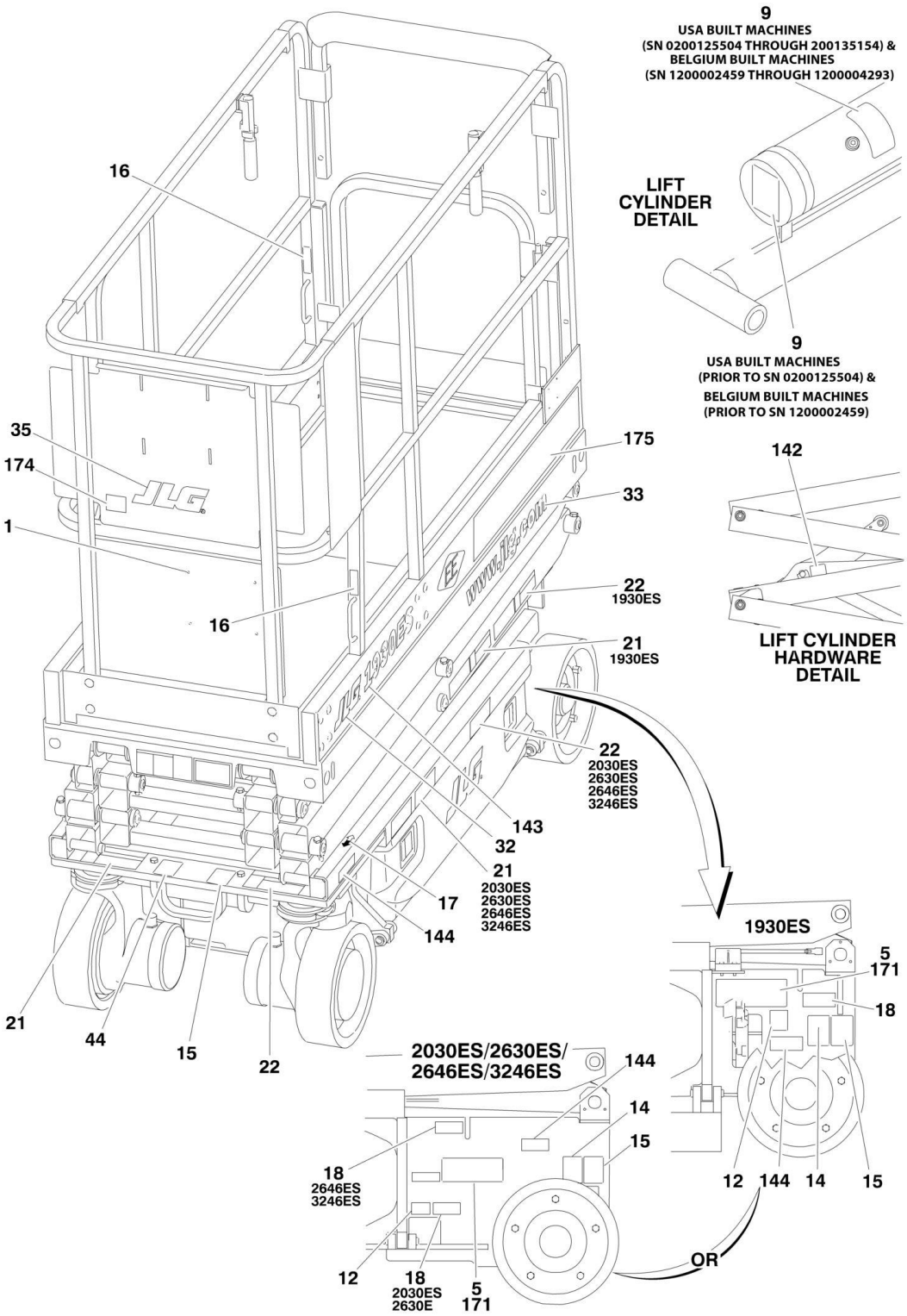

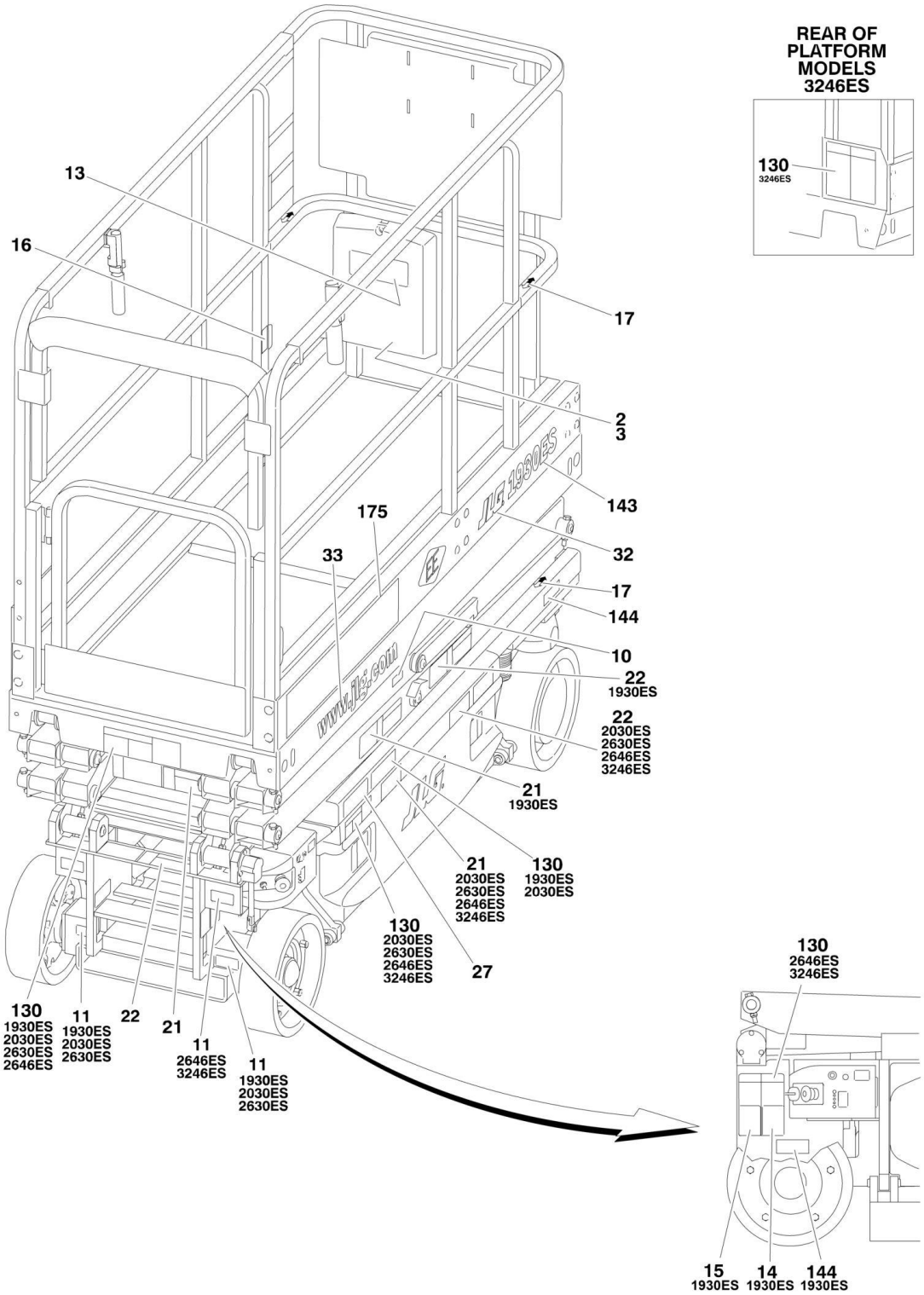
REAR OF PLATFORM MODELS 3246ES
130 3246ES
13
16
17
2
3
143
175
32
33
17
144
10
22 1930ES
22 2030ES 2630ES 2646ES 3246ES
21 1930ES
21 2030ES 2630ES 2646ES 3246ES
130 1930ES 2030ES
130 2030ES 2630ES 2646ES 3246ES
27
130 1930ES 2030ES 2630ES 2646ES
11 1930ES 2030ES 2630ES
22
21
11 2646ES 3246ES
11 1930ES 2030ES 2630ES
130 2646ES 3246ES
15 1930ES
14 1930ES
144 1930ES

PLATFORM DECAL PANEL DETAILS

MODEL 1930ES

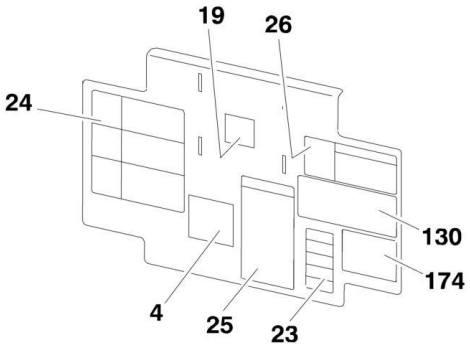

MODELS 2030ES & 2630ES

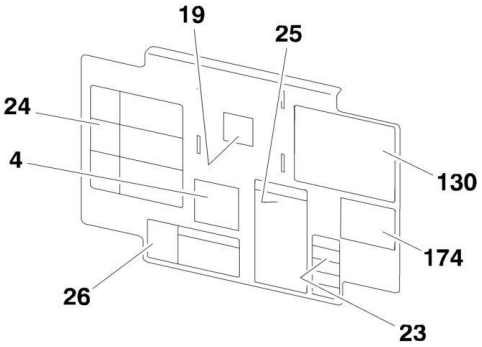

MODELS 2646ES & 3246ES

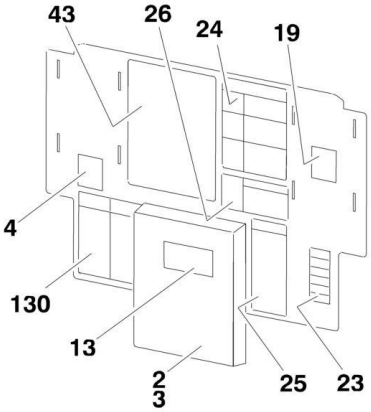

FIGURE 8-1. DECAL INSTALLATION (ANSI SPEC)

ITEM	PART NUMBER	QTY	DESCRIPTION	REV
	0272854	Ref	**DECALS INSTALLATION**	7
	0272870	Ref	**JLG Decals**	2
1	2080040	4	Fastener	
2	0860520	1	Box, Manual Storage	
3	1060279	1	Cable, Lanyard	
4	1700584	1	Decal - Patent	
5	2080057	4	Fastener	
7	See Note	NSS	Decal - Bar Code (Not Shown - Located on Back of Platform Console Box) (Note: Not Available for Purchase)	
9	1704412	1	Decal - Hydraulic Oil	
10	1705693	1	Decal - Safety Prop	
11	1704016	2	Decal - Forklift	
12	1702155	1	Decal - Battery Disconnect	
13	1701509	1	Decal - Manual Reference	
14	1703811	4	Decal - Lifting Lugs	
15	1703814	3	Decal - Tie Down	
16	1704277	3	Decal - Attach Lanyard Here	
17	1703819	4	Decal - Directional Arrow	
18	1703822	1	Decal - Manual Descent	
19	1705692	1	Decal - Control Box Location	
21	1705694	4	Decal - Crushing Hazard	
22	1705695	4	Decal - Danger Electrocution	
23	1705686	1	Decal - Legend	
24	1705680	1	Decal - Danger/Warning	
25	1705679	1	Decal - Inspection	
26	1705681	1	Decal - Electrocution	
27	1703813	2	Decal - Warning Battery Vent	
32	1705754	2	Decal - JLG	
33	1705687	2	Decal - Website (USA Built Machines) **(Prior to SN 0200135154)**	
33	1705687	1	Decal - Website (Belgium Built Machines) **(Prior to SN 1200003933)**	
35	1702773	1	Decal - JLG	
39		Ref	Decal - AC Power Options:	
39	1703464	1	Decal - AC Power 120-60Hz	
39	3252507	1	Decal - AC Power 220V-50/60Hz	
44	1701499	1	Decal - No Lift	
	0010588	Ref	**DECAL OPTIONS**	38
130		Ref	Decal - Capacity Options:	
130		Ref	Decal - Capacity 1930ES:	
130	1705638	2	Decal - Capacity 500lbs/227kg (Platform Box and Platform Entry Locations)	
130	1705699	1	Decal - Capacity 500lbs/227kg (Ground Control Box Location)	
130	1705639	3	Decal - Capacity 2030ES: 800lbs/363kg (All Locations)	
130		Ref	Decal - Capacity 2630ES:	
130	1705941	1	Decal - Capacity Platform Console Box Decal - 500lb/227kg and 800lb/360kg (Located at Platform Console Box)	
130	1705941	1	Decal - Capacity Platform Entry Decal USA Built Machines - 500lb/227kg **(Prior to SN 0200116522)**	
130	1705941	1	Decal - Capacity Platform Entry Decal Belgium Built Machines - 800lb/360kg **(Prior to SN 1200001229)**	

ITEM	PART NUMBER	QTY	DESCRIPTION	REV
130	1705880	1	Decal - Capacity Platform Entry Decal USA Built Machines - 500lb/227kg **(SN 0200116522 through 0200135154)**	
130	1705880	1	Decal - Capacity Platform Entry Decal Belgium Built Machines - 800lb/360kg **(SN 1200001229 through 1200004293)**	
130	1705699	1	Decal - Capacity Ground Control Box USA Built Machines - 500lb/227kg **(Prior to SN 0200116522)**	
130	1705699	1	Decal - Capacity Ground Control Box Belgium Built Machines - 500lb/227kg **(Prior to SN 1200001229)**	
130	1705941	1	Decal - Capacity Ground Control Box USA Built Machines - 500lb/227kg **(SN 0200116522 through 0200135154)**	
130	1705941	1	Decal - Capacity Ground Control Box Belgium Built Machines - 800lb/360kg **(SN 1200001229 through 1200004293)**	
130	1705640	3	Decal - Capacity 2646ES: 1000lbs/454kg	
130	1705641	3	Decal - Capacity 3246ES: 700lbs/317kg	
142	1001116915	1	Decal - Hardware Retention	
143		Ref	Decal - Model Designation Options:	
143	1705642	2	Decal - Model Designation 1930ES	
143	1705643	2	Decal - Model Designation 2030ES	
143	1705644	2	Decal - Model Designation 2630ES	
143	1705645	2	Decal - Model Designation 2646ES	
143	1705646	2	Decal - Model Designation 3246ES	
144		Ref	Decal - Max Tire Load Options:	
144	1705647	4	Decal - Max Tire Load 1930ES	
144	1706310	4	Decal - Max Tire Load 2030ES/2630ES	
144	1706311	4	Decal - Max Tire Load 2646ES/3246ES	
171	See Note	NSS	Nameplate - Serial Number (Note: Not Available for Purchase)	
174	3251813	1	Decal - Made in USA	
175		Ref	Decal - Platform Color Options:	
175	1705850	2	Decal - Platform Color 1930ES/2030ES/2630ES	
175	1705851	2	Decal - Platform Color 2646ES/3246ES	

FIGURE 8-2. DECALS INSTALLATIONS (ANSI EXPORT SPEC)

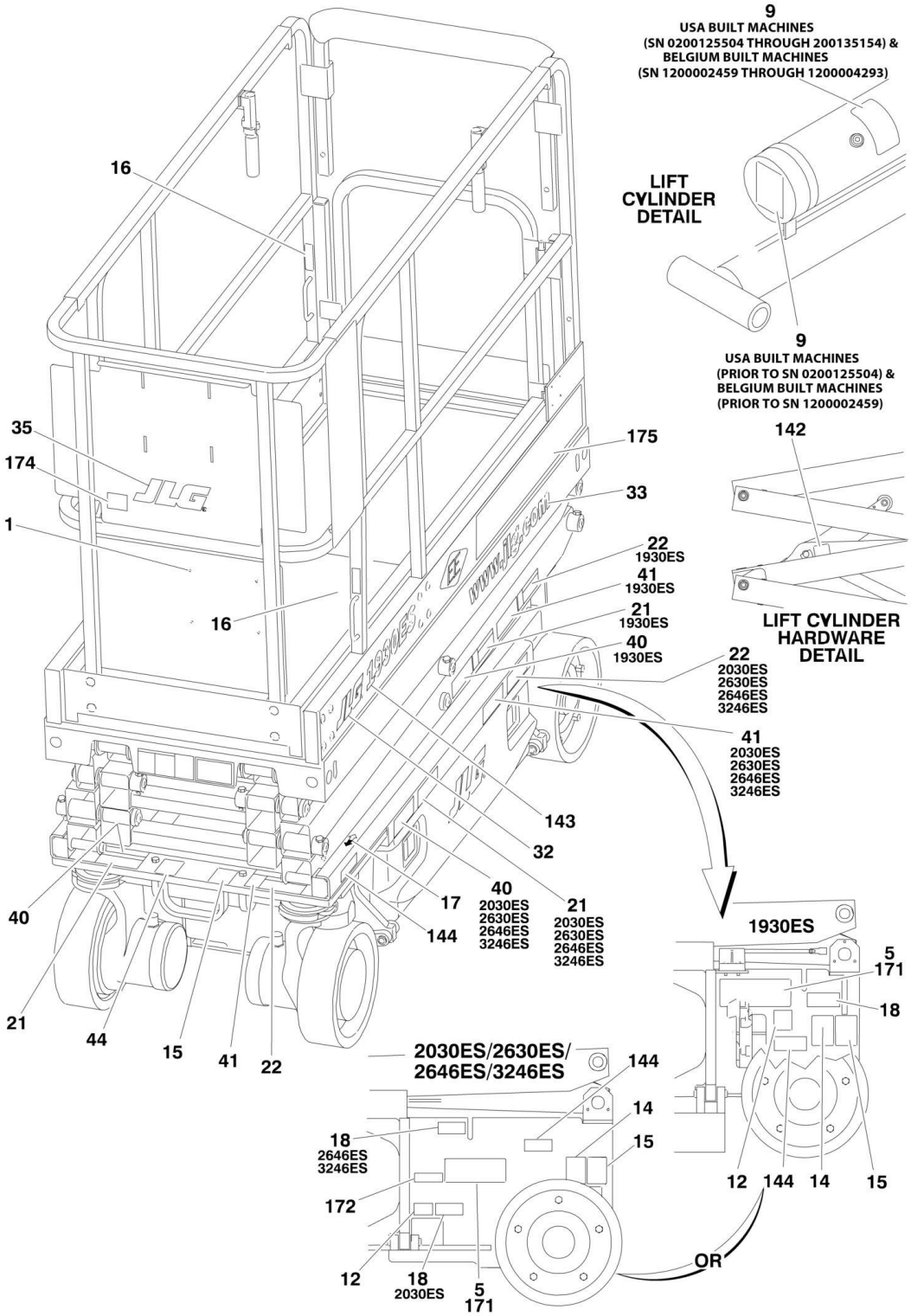

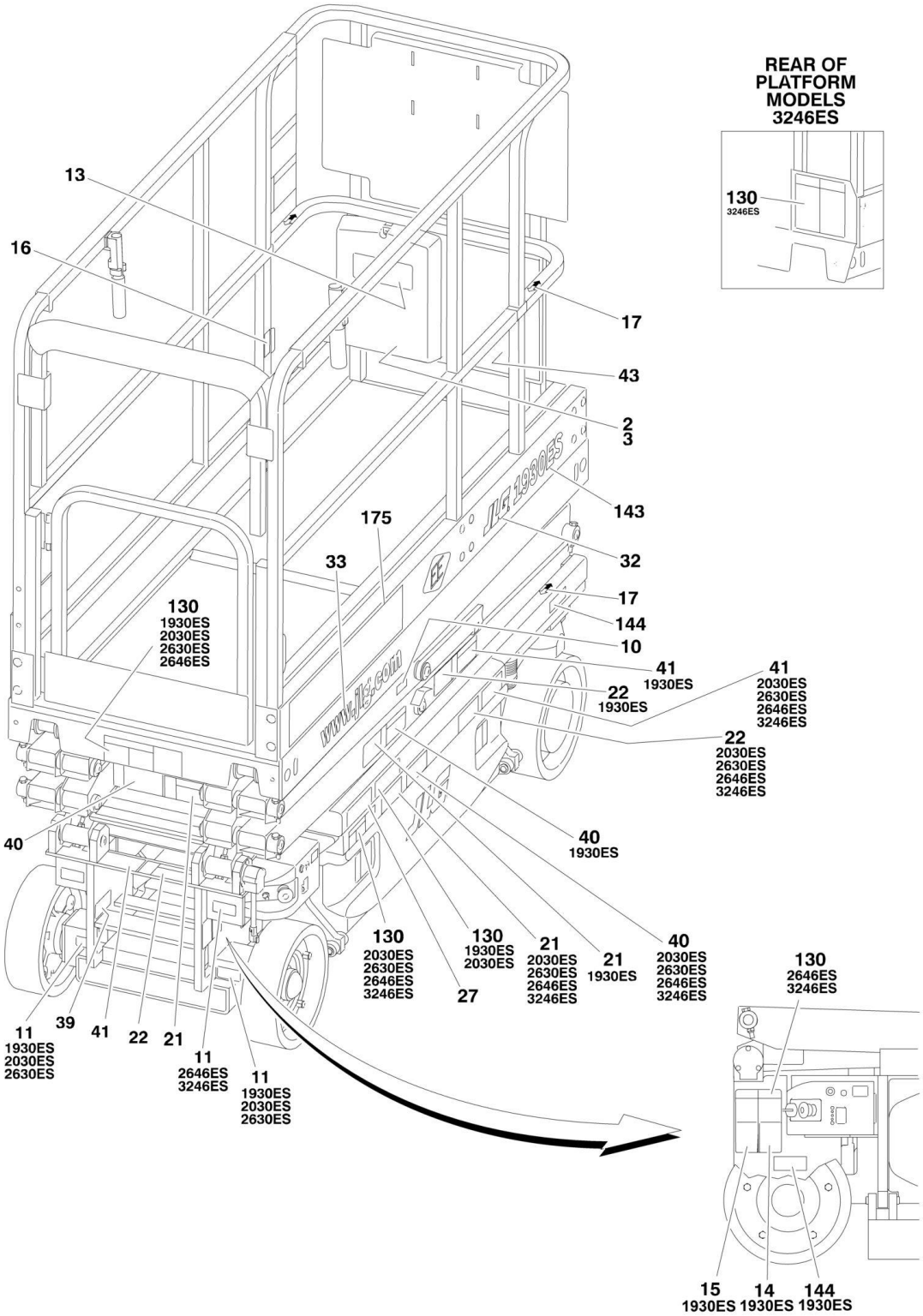
REAR OF PLATFORM MODELS 3246ES
130
3246ES
13
16
17
43
2
3
143
32
175
33
17
144
10
130
1930ES
2030ES
2630ES
2646ES
41
1930ES
41
2030ES
2630ES
2646ES
3246ES
22
1930ES
22
2030ES
2630ES
2646ES
3246ES
40
40
1930ES
130
2030ES
2630ES
2646ES
3246ES
130
1930ES
2030ES
27
21
2030ES
2630ES
2646ES
3246ES
21
1930ES
40
2030ES
2630ES
2646ES
3246ES
130
2646ES
3246ES
11
1930ES
2030ES
2630ES
39
41
22
21
11
2646ES
3246ES
11
1930ES
2030ES
2630ES
15
1930ES
14
1930ES
144
1930ES

PLATFORM DECAL PANEL DETAILS

MODEL 1930ES

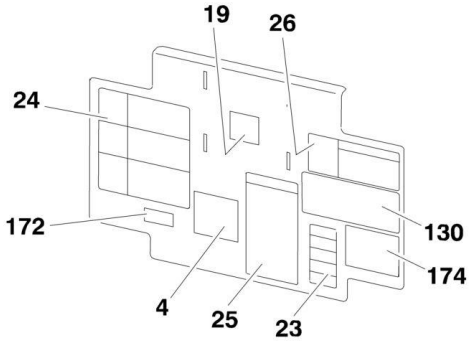

MODELS 2030ES & 2630ES

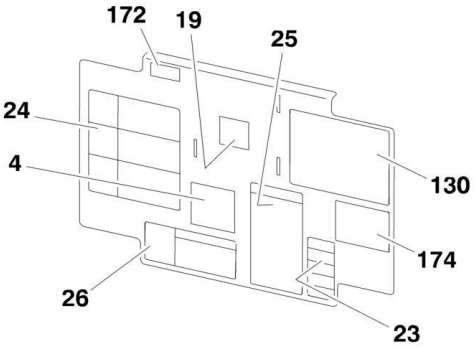

MODELS 2646ES & 3246ES

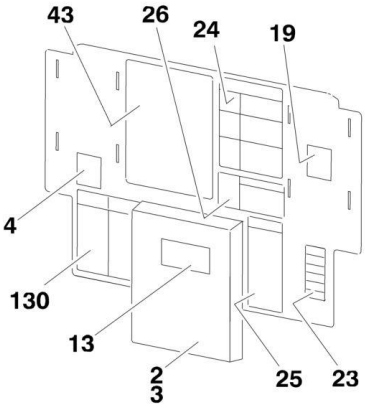

FIGURE 8-2. DECALS INSTALLATIONS (ANSI EXPORT SPEC)

ITEM	PART NUMBER	QTY	DESCRIPTION	REV
		Ref	**DECALS INSTALLATION - ANSI EXPORT SPECS**	
	0272864	Ref	**Brazilian Spec (Portuguese/Spanish Spec)**	3
	0273795	Ref	**Chinese Specs (English/Chinese Spec)**	3
	0272857	Ref	**CSA Spec (English/French)**	3
	0274120	Ref	**Korean Spec**	2
	0272863	Ref	**Latin American Spec (English/Spanish)**	3
	0272870	Ref	**JLG Decals**	2
1	2080040	4	Fastener	
2	0860520	1	Box, Manual Storage	
3	1060279	1	Cable, Lanyard	
4	1700584	1	Decal - Patent	
5	2080057	4	Fastener	
7	See Note	NSS	Decal - Bar Code (Not Shown - Located on Back of Platform Console Box) (Note: Not Available for Purchase)	
9	1704412	1	Decal - Hydraulic Oil	
10	1705693	1	Decal - Safety Prop	
11	1704016	2	Decal - Forklift	
12	1702155	1	Decal - Battery Disconnect	
13	1701509	1	Decal - Manual Reference	
14	1703811	3	Decal - Lifting Lugs	
15	1703814	3	Decal - Tie Down	
16	1704277	3	Decal - Attach Lanyard Here	
17	1703819	4	Decal - Directional Arrow	
18	1703822	1	Decal - Manual Descent	
19	1705692	1	Decal - Control Box Location	
21		Ref	Decal - Crushing Hazard	
21	1705694	4	All Specs except Brazilian Spec	
21	1705722	4	Brazilian Specs	
22		Ref	Decal - Danger Electrocution	
22	1705695	4	All Specs except Brazilian Spec	
22	1703834	4	Brazilian Specs	
23		Ref	Decal - Legend	
23	1705726	1	Brazilian Specs	
23	1705946	1	Chinese Spec	
23	1705723	1	CSA Spec	
23	1706057	1	Korean Spec	
23	1705720	1	Latin American Spec	
24		Ref	Decal - Danger/Warning	
24	1705680	1	All Specs except Brazilian Spec	
24	1705894	1	Brazilian Specs	
25		Ref	Decal - Inspection	
25	1705679	1	All Specs except Brazilian Spec	
25	1705727	1	Brazilian Specs	
26		Ref	Decal - Electrocution	
26	1705681	1	All Specs except Brazilian Spec	
26	1705721	1	Brazilian Specs	
27		Ref	Decal - Warning Battery Vent	
27	1704341	2	Brazilian Spec	
27	1704344	2	Chinese Spec	
27	1704340	2	CSA Spec	

ITEM	PART NUMBER	QTY	DESCRIPTION	REV
27	1703856	2	Korean Spec	
27	1704339	2	Latin American Spec	
32	1705754	2	Decal - JLG	
33	1705687	2	Decal - Website (USA Built Machines Only) **(Prior to SN 0200135154)**	
33	1705687	1	Decal - Website (Belgium Built Machines Only) **(Prior to SN 1200003933)**	
35	1702773	1	Decal - JLG	
39		Ref	Decal - AC Power Options:	
39	1703464	1	Decal - AC Power 120-60Hz	
39	3252507	1	Decal - AC Power 220V-50/60Hz	
40		Ref	Decal - Crushing Hazard Options:	
40	1705725	4	Brazilian and Latin American Specs	
40	1705717	4	CSA Spec	
40	1705943	4	Chinese Spec	
40	1706052	4	Korean Spec	
41		Ref	Decal - Electrocution Options:	
41	1705724	4	Brazilian and Latin American Specs	
41	1705718	4	CSA Spec	
41	1705944	4	Chinese Spec	
41	1706056	4	Korean Spec	
43		Ref	Decal - Warning/Danger Options:	
43	1705719	1	Brazilian and Latin American Specs	
43	3252098	1	CSA Spec (English/French)	
43	1705945	1	Chinese Spec	
43	1706053	1	Korean Spec	
44	1701499	1	Decal - No Lift	
	0010588	Ref	**DECAL OPTIONS**	38
130		Ref	Decal - Capacity Options:	
130		Ref	Decal - Capacity 1930ES:	
130	1705638	2	Decal - Capacity 500lbs/227kg (Platform Box and Platform Entry Locations)	
130	1705699	1	Decal - Capacity 500lbs/227kg (Ground Control Box Location)	
130	1705639	3	Decal - Capacity 2030ES: 800lbs/363kg (All Locations)	
130		Ref	Decal - Capacity 2630ES:	
130	1705941	1	Decal - Capacity Platform Console Box Decal - 500lb/227kg & 800lb/360kg (Located on Frame Side and at Platform Console Box)	
130	1705941	1	Decal - Capacity Platform Entry Decal USA Built Machines - 500lb/227kg **(Prior to SN 0200116522)**	
130	1705941	1	Decal - Capacity Platform Entry Decal Belgium Built Machines - 800lb/360kg **(Prior to SN 1200001229)**	
130	1705880	1	Decal - Capacity Platform Entry Decal USA Built Machines - 500lb/227kg **(SN 0200116522 through 0200239381)**	
130	1705880	1	Decal - Capacity Platform Entry Decal Belgium Built Machines - 800lb/360kg **(SN 1200001229 to Present)**	
130	1705699	1	Decal - Capacity Ground Control Box USA Built Machines - 500lb/227kg **(Prior to SN 0200116522)**	
130	1705699	1	Decal - Capacity Ground Control Box Belgium Built Machines - 500lb/227kg **(Prior to SN 1200001229)**	
130	1705941	1	Decal - Capacity Ground Control Box USA Built Machines - 500lb/227kg **(SN 0200116522 through 0200239381)**	
130	1705941	1	Decal - Capacity Ground Control Box Belgium Built Machines - 800lb/360kg **(SN 1200001229 to Present)**	

ITEM	PART NUMBER	QTY	DESCRIPTION	REV
130	1705640	3	Decal - Capacity 2646ES: 1000lbs/454kg	
130	1705641	3	Decal - Capacity 3246ES: 700lbs/317kg	
142	1001116915	1	Decal - Hardware Retention	
143		Ref	Decal - Model Designation Options:	
143	1705642	2	Decal - Model Designation 1930ES	
143	1705643	2	Decal - Model Designation 2030ES	
143	1705644	2	Decal - Model Designation 2630ES	
143	1705645	2	Decal - Model Designation 2646ES	
143	1705646	2	Decal - Model Designation 3246ES	
144		Ref	Decal - Max Tire Load Options:	
144	1705647	4	Decal - Max Tire Load 1930ES	
144	1706310	4	Decal - Max Tire Load 2030ES/2630ES	
144	1706311	4	Decal - Max Tire Load 2646ES/3246ES	
171	See Note	NSS	Nameplate - Serial Number (Note: Not Available for Purchase)	
172		Ref	Decal - CSA Options:	
172	1705303	1	CSA Spec (English/French)	
172	Not Required	1	Latin American Spec (English/Spanish)/(English/Chinese Spec)	
174	3251813	1	Decal - Made in USA	
175		Ref	Decal - Platform Color Options:	
175	1705850	2	Decal - Platform Color 1930ES/2030ES/2630ES	
175	1705851	2	Decal - Platform Color 2646ES/3246ES	
176	1705880	1	Decal - Capacity (Platform Entry) (800lbs/363kg - 500lbs/227kg) (2630ES)	

FIGURE 8-3. DECAL INSTALLATION (AUSTRALIAN AND CE SPECS)

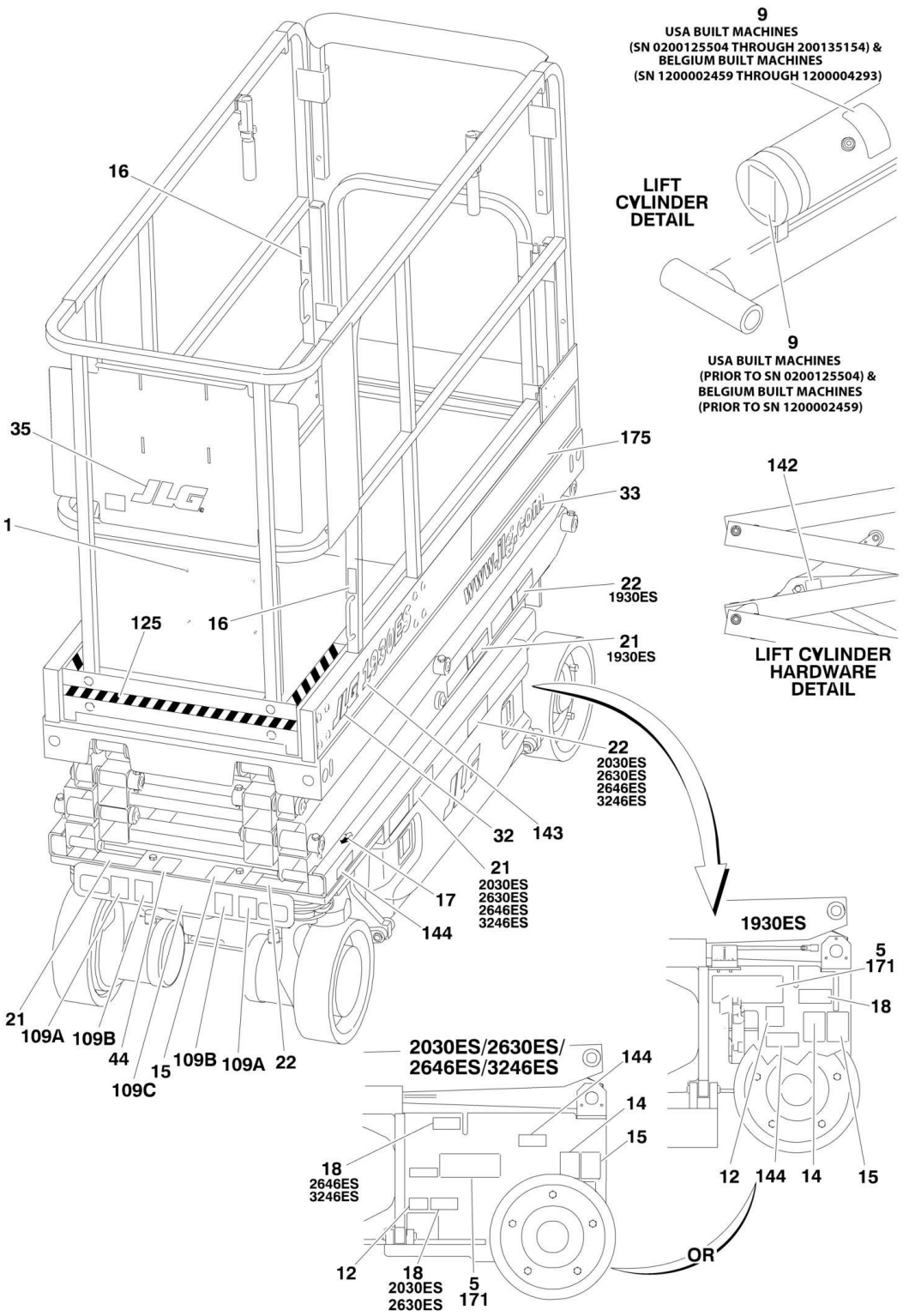

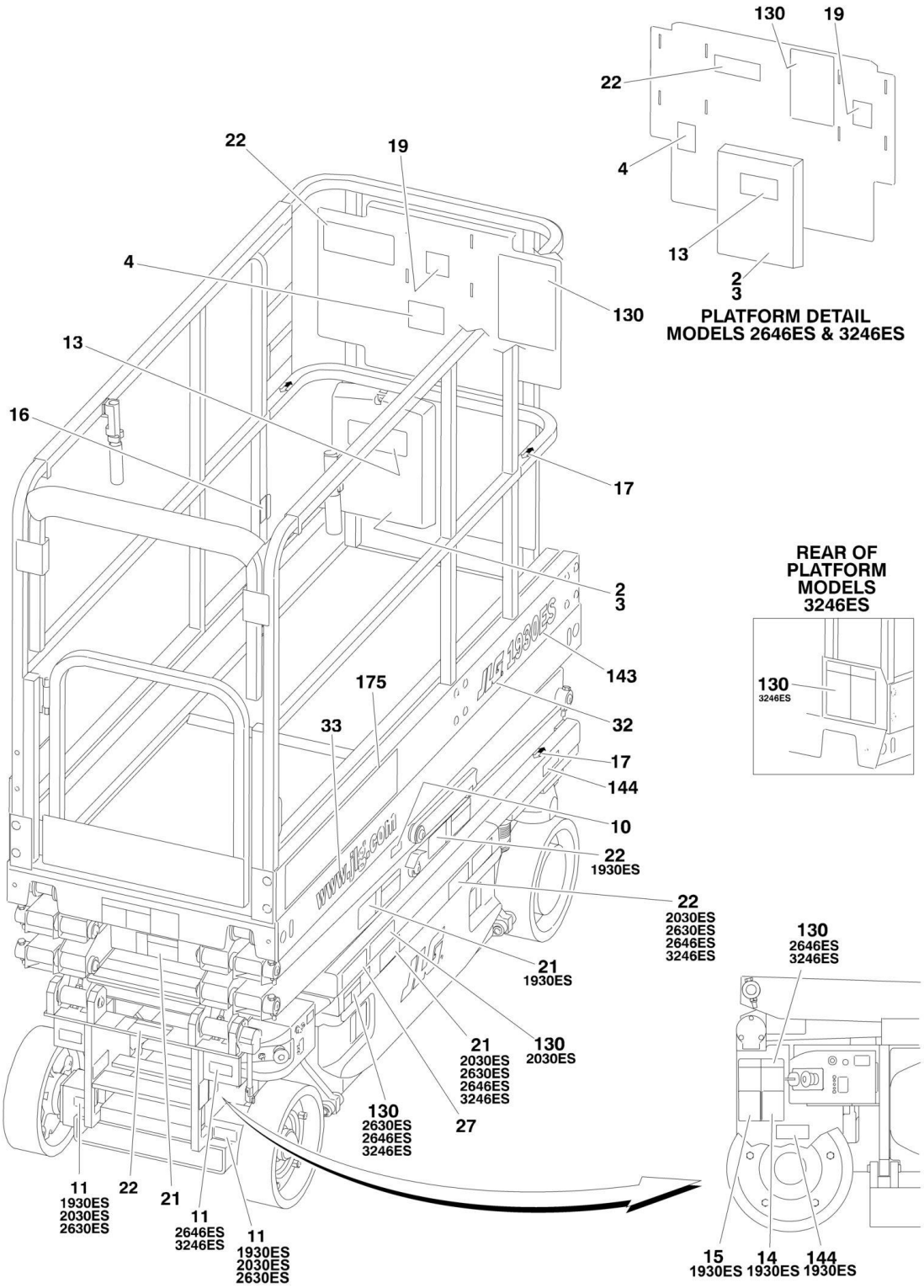
130
19
22
4
13
2
3
PLATFORM DETAIL
MODELS 2646ES & 3246ES
22
19
4
130
13
16
17
2
3
143
175
32
33
17
144
10
22
1930ES
22
2030ES
2630ES
2646ES
3246ES
21
1930ES
21
2030ES
2630ES
2646ES
3246ES
130
2030ES
130
2630ES
2646ES
3246ES
27
11
1930ES
2030ES
2630ES
22
21
11
2646ES
3246ES
11
1930ES
2030ES
2630ES
REAR OF
PLATFORM
MODELS
3246ES
130
3246ES
130
2646ES
3246ES
15
1930ES
14
1930ES
144
1930ES

FIGURE 8-3. DECAL INSTALLATION (AUSTRALIAN AND CE SPECS)

ITEM	PART NUMBER	QTY	DESCRIPTION	REV
		Ref	**DECALS INSTALLATION - ANSI EXPORT SPECS**	
	0272856	Ref	**Australian Spec**	5
	0272855	Ref	**CE Spec**	7
	0272870	Ref	**JLG Decals**	2
1	2080040	4	Fastener	
2	0860520	1	Box, Manual Storage	
3	1060279	1	Cable, Lanyard	
4	1700584	1	Decal - Patent	
5	2080057	4	Fastener	
7	See Note	NSS	Decal - Bar Code (Not Shown - Located on Back of Platform Console Box) (Note: Not Available for Purchase)	
9	1704412	1	Decal - Hydraulic Oil	
10	1705693	1	Decal - Safety Prop	
11	1704016	2	Decal - Forklift	
12	1702155	1	Decal - Battery Disconnect	
13	1701509	1	Decal - Manual Reference	
14	1703811	3	Decal - Lifting Lugs	
15	1703814	3	Decal - Tie Down	
16	1704277	3	Decal - Attach Lanyard Here	
17	1703819	4	Decal - Directional Arrow	
18	1703822	1	Decal - Manual Descent	
19	1705692	1	Decal - Control Box Location	
21	1705673	4	Decal - Crushing Hazard	
22	1705671	5	Decal - Danger Electrocution	
27	1705670	1	Decal - Warning Battery Vent	
32	1705754	2	Decal - JLG	
33	1705687	2	Decal - Website (USA Built Machines) **(Prior to SN 0200135154)**	
33	1705687	1	Decal - Website (Belgium Built Machines) **(Prior to SN 1200003933)**	
35	1702773	1	Decal - JLG	
39		Ref	Decal - AC Power Options:	
39	1703464	1	Decal - AC Power 120-60Hz	
39	3252507	1	Decal - AC Power 220V-50/60Hz	
44	1701499	1	Decal - No Lift	
45	1702928	1	Decal - CE (Not Shown)	
	0010588	Ref	**DECAL OPTIONS**	38
109	0273454	AR	Lifting Lug and Decals (Standard on Australian Spec/Optional on CE Spec)	B
109A	1703811	2	Decal - Lifting Lug	
109B	1703814	2	Decal - Tie-Down	
109C	0240055	1	Attach, Lifting Lug	
109C	3574636	1	Bar, Mounting (Located Behind Item 109C)	
125		Ref	Decal - Corner Stripe Options:	
125	0272721	AR	Decal - Corner Stripe 1930ES/2030ES/2630ES	B
125	0272862	AR	Decal - Corner Stripe 2646ES/3246ES	B
125	4420051	1.3 m	Decal - Corner Stripe 1930ES/2030ES/2630ES	
125	4420051	1.2 m	Decal - Corner Stripe 2646ES/3246ES	
130		Ref	Decal - Capacity Options:	
130	1705666	1	Decal - Capacity 230kg Indoor/120kg Outdoor (1930ES)	
130	1705667	1	Decal - Capacity 360kg (2030ES)	

ITEM	PART NUMBER	QTY	DESCRIPTION	REV
130	1705887	1	Decal - Capacity 230kg (2630ES) (Australian Specs)	
130	1705942	1	Decal - Capacity 230kg/360kg (2630ES) (CE Specs)	
130	1705668	1	Decal - Capacity 450kg (2646ES)	
130	1705819	1	Decal - Capacity 320kg/450kg (3246ES) (Australian Spec)	
130	1705704	1	Decal - Capacity 320kg (3246ES) (CE Spec)	
142	1001116915	1	Decal - Hardware Retention	
143		Ref	Decal - Model Designation Options:	
143	1705642	2	Decal - Model Designation 1930ES	
143	1705643	2	Decal - Model Designation 2030ES	
143	1705644	2	Decal - Model Designation 2630ES	
143	1705645	2	Decal - Model Designation 2646ES	
143	1705646	2	Decal - Model Designation 3246ES	
144		Ref	Decal - Max Tire Load Options:	
144	1705648	4	Decal - Max Tire Load 1930ES	
144	1706310	4	Decal - Max Tire Load 2030ES/2630ES	
144	1706312	4	Decal - Max Tire Load 2646ES/3246ES	
171	See Note	NSS	Nameplate - Serial Number (Note: Not Available for Purchase)	
175		Ref	Decal - Platform Color Options:	
175	1705850	2	Decal - Platform Color 1930ES/2030ES/2630ES	
175	1705851	2	Decal - Platform Color 2646ES/3246ES	

SECTION 9 - RECOMMENDED SERVICE PARTS STOCK

FIGURE 9-1. MODEL ES STANDARD PARTS

ITEM	PART NUMBER	QTY	DESCRIPTION	REV
	Note	Ref	**Note: The following list will service one machine (built to current production per date on the front cover) with emergency repair parts which can be installed in the field. Parts from the list should be replaced when inventory is depleted to keep service parts stock supplied. For further information, contact your JLG dealer or the JLG Industries Parts Department.**	
		Ref	**STANDARD PARTS**	
	2915064	1	Relay	
	4360069	1	Breaker, Circuit - 10Amp	
	4360328	1	Switch, Toggle	
	2860030	1	Key, Replacement	
	4360475	1	Switch, Mushroom	
	1001091910	1	Switch, Rotary Angle Sensor	
	1001134438	1	Controller, Drive	
	4360538	1	Switch and Membrane	
	4360539	1	Switch, Toggle	
	7020500	1	Switch, Rocker	
	7020501	1	Switch, Push Button	
	7023540	1	Coil	
	7023541	1	Coil	
	7023593	1	Plug, Fill	
	7023576	1	Filter	
	3990013	2	Diode 1Amp	

FIGURE 9-2. MODEL ES VARIABLE PARTS

ITEM	PART NUMBER	QTY	DESCRIPTION	REV
	Note	Ref	**Note: The following list will service one machine (built to current production per date on the front cover) with emergency repair parts which can be installed in the field. Parts from the list should be replaced when inventory is depleted to keep service parts stock supplied. For further information, contact your JLG dealer or the JLG Industries Parts Department.**	
		Ref	**VARIABLE PARTS**	
	1600346	1	Control Module (Frame)	
	1600419	1	Control Module (Ground Control)	
	4000006	1	Tilt Module	
	4360469	1	Switch, Key (ANSI/ANSI Export Spec)	
	4360470	1	Switch, Key (CE/Australian Spec)	
	4360387	1	Switch, Push Button	
	3080007	1	Magnet, Latch (Machines with Platform Gate Entry)	
	1001101076	1	Snap Latch Repair Kit (Machines with Platform Chain Entry)	
	1001091965	1	Control Module (Platform)	
	4360607	1	Switch, Limit	
	4360613	1	Limit Switch (Machines with Optional Brake Disconnect)	
	4922944	1	Release Switch (Machines with Optional Brake Disconnect)	
	4360482	1	Switch, Toggle (ANSI and CSA Spec Machines with Optional Battery Charger/Inverter Combo)	

FIGURE 9-3. MODEL ES MAINTENANCE KITS

ITEM	PART NUMBER	QTY	DESCRIPTION	REV
	Note	Ref	**Note: The following list will service one machine (built to current production per date on the front cover) with emergency repair parts which can be installed in the field. Parts from the list should be replaced when inventory is depleted to keep service parts stock supplied. For further information, contact your JLG dealer or the JLG Industries Parts Department.**	
		Ref	**MAINTENANCE KITS**	
	1001101329	NLA	Annual Hydraulic Maintenance Kit - 1930ES/2030ES/2630ES (With Standard Hydraulic Oil)	
	1001101330	NLA	Annual Hydraulic Maintenance Kit - 2646ES/3246ES (With Standard Hydraulic Oil)	

SECTION 10 - SPECIAL OPTIONS

FIGURE 10-1. SPECIAL OPTIONS LIST

ITEM	PART NUMBER	QTY	DESCRIPTION	REV
	Note	Ref	**Note: This list is to accommodate machines ordered with special equipment. Options may not be applicable to all models. For more specific parts information contact JLG Parts Department.**	
		Ref	**SPECIAL OPTIONS LIST**	
		Ref	**Airline Installation (1/2in)**	
	0274516	Ref	**Airline Installation (1/2in) 1930ES**	
	0274370	Ref	**Airline Installation (1/2in) 2030ES**	
	0274517	Ref	**Airline Installation (1/2in) 2630ES**	
	0274446	Ref	**Airline Installation (1/2in) 2646ES/3246ES**	
		Ref	**Brake Disconnect/Release Kit Options**	
	0275432	Ref	**Brake Disconnect Cable Kit (Optional All Specs)**	
	2902331	Ref	Brake Mount Kit (includes Mounting Bracket and Setscrew)	
	4922944	Ref	Brake Switch and Harness	
	0275530	Ref	**Brake Release Switch (Optional ANSI, ANSI Export, CSA and UL Specs/Standard on Australian and CE Specs) For Machines without Pressure Checks)**	
	See Note	Ref	**Brake Release Switch (Optional ANSI, ANSI Export, CSA and UL Specs/Standard on Japanese Specs) (For Machines with Pressure Checks) (was p/n 0275603) (Note: Use Both p/ns 0275530 & 0273859)**	
	2915016	Ref	**Battery Charger Mounting Kit**	
		Ref	**Decal Options**	
	0272721	Ref	**Decals - Corner Stripes (1930ES/2030ES/2630ES)**	
	0272862	Ref	**Decals - Corner Stripes (2646ES/3246ES)**	
	0273603	Ref	**Decals - Commercial Solutions Group (ANSI and CSA Specs Only)**	
	1705304	Ref	**Decals - Service Support (Commercial Solutions Group Only) (ANSI, CSA and UL Specs Only)**	
	0274545	Ref	**Decals - FedEx (ANSI, CSA and UL Specs Only)**	
	0273603	Ref	**Decals - Grainger Spec (ANSI, CSA and UL Specs Only)**	
	0274527	Ref	**Decals - Head and Engquist Equipment (ANSI Specs Only)**	
	0273543	Ref	**Decals - Hertz (ANSI, CSA and UL Specs Only)**	
	0272877	Ref	**Decals - Home Depot (ANSI, CSA and UL Specs Only)**	
	0273544	Ref	**Decals - Nations Rent (ANSI, CSA and UL Specs Only)**	
	0274242	Ref	**Decals - Nations Equipment Services (1930ES/2030ES/2630ES) (ANSI, CSA and UL Specs Only)**	
	0274251	Ref	**Decals - Nations Equipment Services (2646ES/3246ES) (ANSI, CSA and UL Specs Only)**	
	0275900	Ref	**Decals - RSC Equipment Rental (ANSI Specs Only)**	
	1705304	Ref	**Decals - Service Support (ANSI and CSA Specs Only)**	
	1706922	Ref	**Decals - Service Support (ANSI and CSA Specs Only)**	
	0272872	Ref	**Decals - Sunbelt (ANSI, CSA and UL Specs Only)**	
	0274179	Ref	**Decals - Sunstate (ANSI, CSA and UL Specs Only)**	
	0274126	Ref	**Decals - UL Specs (EE Rating)**	
	0272871	Ref	**Decals - United Rentals (ANSI, CSA and UL Specs Only)**	
	1001103307	Ref	**Decals - UPS (ANSI Spec Only)**	
		Ref	**Decal Kit Options**	
	2890186	Ref	**Decal Kit - CE Designation**	
	1001149795	Ref	**Decal Kit - Complete 1930ES**	
	1001149796	Ref	**Decal Kit - Complete 2030ES**	

ITEM	PART NUMBER	QTY	DESCRIPTION	REV
	1001149797	Ref	**Decal Kit - Complete 2630ES**	
	1001149798	Ref	**Decal Kit - Complete 2646ES**	
	1001149799	Ref	**Decal Kit - Complete 3246ES**	
	2902522	Ref	**Decal Kit - Country Spec (ANSI Spec)**	
	2902523	Ref	**Decal Kit - Country Spec (Australian and CE Spec)**	
	2902526	Ref	**Decal Kit - Country Spec (Brazil Spec)**	
	2902528	Ref	**Decal Kit - Country Spec (Chinese Spec)**	
	2902524	Ref	**Decal Kit - Country Spec (CSA Spec)**	
	2902532	Ref	**Decal Kit - Country Spec (Korean Spec)**	
	2902525	Ref	**Decal Kit - Country Spec (Latin American Spec)**	
	2902267	Ref	**Decal Kit - Master**	
	1001091967	Ref	**Decal Kit - Platform Box Decal**	
	1001091393	Ref	**Decal Kit - Platform Box Decal and Housing**	
	1001091965	Ref	**Decal Kit - Platform Box Decal, Housing and PC Board**	
		Ref	**Electrical Connector Kits**	
	1001148902	Ref	Amp/Tyco Electrical Connector Kit	
	1001148903	Ref	Deutsch DT Electrical Connector Kit	
	1001148904	Ref	Deutsch HD Electrical Connector Kit	
	1001148905	Ref	Packard Electrical Connector Kit	
	1001148906	Ref	Various Electrical Connectors Kit	
		Ref	**Electricians Package (Note: See Platform Section)**	
	0273950	Ref	**Without DC Converter**	
	0273949	Ref	**With DC Converter**	
		Ref	**Electricians Tree (Note: See Platform Section)**	
	0240092	Ref	**Without DC Converter**	
	0274153	Ref	**With DC Converter**	
	0274849	Ref	**Fire Extinguisher Installation (ANSI)**	
		Ref	**Fluids**	
	2300028	AR	**Fluid, Hydraulic - Mobil DTE 10 Excel 15 (Bulk)**	
	70010346	AR	**Fluid, Hydraulic - Mobil DTE 10 Excel 15 (1 Gallon)**	
	2300042	AR	**Fluid, Hydraulic - Synthetic Biodegradeable**	
		Ref	**Footswitch Installation Options (Japanese Spec)**	
	0273761	Ref	**Footswitch Installation 1930ES**	
	0273762	Ref	**Footswitch Installation 2030ES/2630ES/2646ES/3246ES**	
	3128145	Ref	**Inspection Packet (ANSI and ANSI Export Specs Only)**	
	0274341	Ref	**Interlock Override for Battery Charger Installation (ANSI)**	
		Ref	**Inverter Installations (ANSI, ANSI Export and Japanese Specs) Only)**	
	0272876	Ref	**Inverter Installations 1930ES**	
	0273070	Ref	**Inverter Installations 2030ES/2630ES**	
	0273071	Ref	**Inverter Installations 2646ES/3246ES**	
	2460042	1	Inverter Assembly	
	4360482	1	Switch, Toggle	
	1705051	1	Decal - Instructions	
	1705052	1	Decal - On-Off	
	0273454	Ref	**Lifting Lugs Installations**	
		Ref	**Maintenance Kits - Annual Hydraulic (Not for Machines with Biodegradeable Hydraulic Fluid)**	
	1001101329	NLA	**Maintenance Kits - Annual Hydraulic (Not for Machines with Biodegradeable Hydraulic Fluid) 1930ES/2030ES/2630ES**	
	1001101330	NLA	**Maintenance Kits - Annual Hydraulic (Not for Machines with Biodegradeable Hydraulic Fluid) 2646ES/3246ES**	

ITEM	PART NUMBER	QTY	DESCRIPTION	REV
	2902405	Ref	**Motor Band Kit (UL Specs Only)**	
	3125053	Ref	**Operator Video (ANSI and ANSI Export Specs Only)**	
	1001214536	Ref	**Platform Extension Lock Replacement Kit (Steel Platform Only)**	
		Ref	**Platform Gate Latch - Magna-Latch Side Pull**	
	1001135316	Ref	**Platform Gate Latch - Magna-Latch Side Pull 1930ES/2030ES/2630ES**	
	1001135317	Ref	**Platform Gate Latch - Magna-Latch Side Pull 2646ES/3246ES**	
		Ref	**Platform Limit Switches and Rail Padding Installations**	
	0272865	Ref	**Platform Limit Switches and Rail Padding Installations 1930ES without Limit Switches**	
	0274042	Ref	**Platform Limit Switches and Rail Padding Installations 1930ES with Limit Switches**	
	0272866	Ref	**Platform Limit Switches and Rail Padding Installations 2030ES/2630ES without Limit Switches**	
	0274043	Ref	**Platform Limit Switches and Rail Padding Installations 2030ES/2630ES with Limit Switches**	
	1001098162	Ref	**Platform Limit Switches and Rail Padding Installations 2646ES with Limit Switches and No Padding (CE Spec Only)**	
	0272867	Ref	**Platform Limit Switches and Rail Padding Installations 2646ES/3246ES without Limit Switches**	
	0274044	Ref	**Platform Limit Switches and Rail Padding Installations 2646ES/3246ES with Limit Switches**	
		Ref	**Platform Worklights Installations**	
	0272850	Ref	**Platform Worklight Installations 1930ES (Without UL Specs)**	
	0272851	Ref	**Platform Worklight Installation 2030ES (Without UL Specs)**	
	0272852	Ref	**Platform Worklight Installation 2630ES (Without UL Specs)**	
	0272853	Ref	**Platform Worklight Installation 2646ES/3246ES (Without UL Specs)**	
	0275937	Ref	**Platform Worklight Installation 2646ES/3246ES (With UL Specs)**	
	0273952	Ref	**Plant Maintenance Package (Note: See Platform Section)**	
	0273951	Ref	**Plumbers Package (Note: See Platform Section)**	
	0273859	Ref	**Pressure Check Installation (All Specs except Australian and CE Specs)**	
		Ref	**Tools for Service**	
	7002821	1	Crimper, Wire	
	7002823	1	Extractor, Pin - Universal	
	4460467	AR	Extractor, Pin #16 Gauge	
	4460510	AR	Extractor, Pin #12 Gauge	
	7004275	1	Installer, Cylinder Seal - 1in	
	7004276	1	Installer, Cylinder Seal - 1 1/2ïn	
	7002826	1	Installer, Cylinder Seal - 2in	
	7016654	1	Screwdriver, Magnetic	
	7002822	1	Screwdriver, Potentiometer	
	7002828	1	Stripper, Wire	
	2901443	1	Analyzer Kit	
	4341055	1	Service Safety Prop	
	1706331	1	Decal - ES Service Prop	
	70000555	1	Relief Valve Removable Tool (For Older Style Relief Valves)	

PART NUMBER INDEX

SECTION 10 - SPECIAL OPTIONS

0010588.....151, 158, 162
0060082.....29
0060083.....27
0100011....11, 37, 44, 56, 59
0100048.....59, 139
0100083.....23
0140011.....97
0140043.....24, 144
0200782.....73
0200783.....73
0200784.....73
0200785.....73
0200786.....73
0200787.....73
0200788.....73
0200789.....73
0200798.....67, 69
0200799.....67, 69
0200800.....69
0200801.....69
0200802.....67, 69
0200803.....67, 69
0200804.....67, 69
0200805.....69
0200807.....67, 69
0200808.....73
0200809.....63
0200810.....63
0200811.....63
0200812.....63
0200813.....63
0200814.....63
0200815.....63
0200816.....67
0200817.....73
0240054.....109
0240055.....162
0240057.....109
0240060.....113
0240061.....113
0240062.....113
0240071.....105
0240087.....105
0240088.....110
0240092.....109, 173
0240093.....109
0240102.....107
0272305.....11, 15
0272306.....12, 15
0272309.....39
0272371.....11, 131
0272372.....11, 131
0272608.....69, 125
0272611.....81
0272622.....74, 125
0272623.....74, 125
0272633.....77
0272637.....77
0272661.....77
0272666.....77
0272667.....89, 90
0272696.....77, 78
0272697.....93, 94
0272698.....77
0272701.....63
0272710.....11, 23
0272711..... 11, 23
0272719..... 43, 47
0272720..... 43, 47
0272721..... 162, 172
0272722..... 24
0272728..... 69
0272729..... 67
0272730..... 67, 125
0272735..... 63, 125
0272757..... 27
0272758..... 27
0272759..... 29
0272778..... 97
0272779..... 97
0272780..... 51, 55
0272781..... 51, 55
0272810..... 24, 51, 56
0272811..... 24, 52, 56
0272827..... 43, 47
0272832..... 138
0272833..... 138
0272834..... 138
0272835..... 138
0272836..... 77
0272837..... 77
0272838..... 77
0272839..... 144
0272843..... 144
0272850..... 174
0272851..... 174
0272852..... 174
0272853..... 174
0272854..... 151
0272855..... 162
0272856..... 162
0272857..... 157
0272858..... 113
0272859..... 113
0272860..... 113
0272862..... 162, 172
0272863..... 157
0272864..... 157
0272865..... 174
0272866..... 174
0272867..... 174
0272870.... 151, 157, 162
0272871..... 172
0272872..... 172
0272874..... 31, 33
0272875..... 31, 33
0272876..... 145, 173
0272877..... 172
0272878.... 43, 52, 56, 98
0272879..... 115, 117
0272880..... 115, 117
0272881..... 115, 117
0272882..... 115, 117
0272883..... 109
0272884..... 109
0272887..... 39
0272888..... 39
0272910..... 81, 82
0272911..... 89, 90
0272912..... 93, 94
0272913..... 24
0272917..... 109
0272928..... 73
0272929..... 73
0272980..... 39
0273008..... 11, 23
0273070..... 145, 173
0273071..... 145, 173
0273110..... 43, 44
0273227..... 11, 131
0273436..... 113
0273437..... 113
0273438..... 113
0273443..... 24, 51, 56
0273444..... 51, 55
0273454..... 162, 173
0273479..... 85
0273543..... 172
0273544..... 172
0273603..... 172
0273681..... 33
0273698..... 44, 47, 48
0273761..... 173
0273762..... 173
0273795..... 157
0273841..... 98
0273859..... 174
0273949..... 173
0273950..... 173
0273951..... 174
0273952..... 174
0273966..... 56
0274012..... 39
0274042..... 174
0274043..... 174
0274044..... 174
0274120..... 157
0274126..... 172
0274153..... 107, 173
0274154..... 117
0274155..... 117
0274156..... 117
0274157..... 117
0274179..... 172
0274214..... 43, 47
0274215..... 43, 47
0274216..... 43, 47
0274217..... 43, 47
0274221..... 43, 47
0274222..... 43, 47
0274224..... 11, 23
0274225..... 11, 23
0274226..... 11, 23
0274242..... 172
0274251..... 172
0274341..... 173
0274370..... 172
0274386..... 98
0274446..... 172
0274516..... 172
0274517..... 172
0274527..... 172
0274545..... 172
0274849..... 173
0275104..... 37
0275105..... 37
0275432..... 59, 172
0275530..... 172
0275603..... 59
0275900..... 172
0275937.....174
0380025.....51, 55
0400215.....43, 47
0400216.....43, 47
0400218.....31
0400220.....33
0400221.....33
0400237.....37
0440223.....107, 109
0440257.....73
0440259.....11, 127
0440263.....27, 29
0440264.....12, 63
0440265.....12
0440266.....63, 67, 69
0440267.....67, 69
0561520.....77
0610161.....51, 55
0610162.....97
0610164.....51, 55
0630565....78, 81, 85, 89, 93
0630579.....12
0630580.....12
0700608.....24, 109
0700610.....107, 109
0700615.....52, 56
0700616.....44
0700619.....24
0700624.....24
0700819.....23
0701014.....27
0701015.....29, 67, 69
0701016.....11, 39, 73
0701018.....69
0701020.....11, 63, 73
0701022....63, 67, 69, 73, 74, 77
0701024.....77
0701026.....77
0701027.....73, 77
0701029.....69, 73, 77
0740603.....105
0751006.....31
0760410.....39
0760606.....24, 140
0760610..39, 43, 47, 113, 139
0760612.....39
0760616.....47
0760808.....98
0760812.....37
0760814.....37
0840041.....140, 141
0840048.....140, 141
0840057.....142
0840058.....139, 140, 142
0840059.....139, 142
0840061.....139
0860038.....144
0860520.....151, 157, 162
0861527.....115, 117
0861669.....55
0861678.....47, 48
0861731.....144
0902780.....37
0902905.....39

0902906 39
0903069 23
0903086 39
0903098 23
0903319 37
0903410 37
0903579 77
0903598 59
0962006 ..... 67, 73, 124
0962155 73
0962181 124
0962257 124
0962292 29
1001091393 ..... 97, 173
1001091492 ..... 23, 24
1001091502 20
1001091843 ..... 21, 143
1001091910 166
1001091965 97, 168, 173
1001091967 ..... 97, 173
1001092454 59
1001093556 59
1001094124 24
1001094175 140
1001094180 140
1001094203 59
1001094301 24
1001094359 59
1001098162 174
1001098781 59
1001099628 20
1001099676 20
1001100819 21
1001100820 21
1001101076 168
1001101329 ..... 170, 173
1001101330 ..... 170, 173
1001102349 12
1001102351 12
1001102353 12
1001102354 12
1001103029 39
1001103030 39
1001103307 172
1001104465 140
1001105108 39
1001105109 39
1001116915 ..... 152, 159, 163
1001134438 166
1001134933 77
1001134934 77
1001134951 77
1001135316 174
1001135317 174
1001136847 37
1001137005 145
1001148902 173
1001148903 173
1001148904 173
1001148905 173
1001148906 173
1001149795 172
1001149796 172
1001149797 173
1001149798 173
1001149799 173
1001214536..... 174
1060279 .... 151, 157, 162
1060331 105
1060379 . 85, 89, 93, 105, 107, 109, 110, 117
1060633 145
1060680 145
1060688 ..... 31, 33, 143
1060689 ..... 31, 34, 143
1060957 ..... 115, 117
1060997 140
1060998 140
1060999 141
1061000 141
1061001 141
1061008 140
1061009 141
1061010 141
1061013 141
1061014 141
1061015 141
1061016 141
1061028 138
1061029 138
1061030 138
1061031 ..... 138, 139
1061034 125
1061035 125
1061036 ..... 63, 125
1061037 145
1120555 105
1180380 74
1180381 63
1180382 ..... 67, 69
1180383 69
1260136 ..... 82, 90, 94
1271564 113
1271565 113
1271571 85
1271572 85
1271574 113
1320043 ..... 31, 37
1320061 23
1320162 ..... 23, 24
1320224 ..... 115, 117
1320318 ..... 11, 139
1321283 24
1321293 34
1380132 .... 81, 85, 89, 93
1380153 11
1380156 97
1380158 ..... 11, 139
1380159 98
1440333 27
1580023 105
1580024 105
1600244 145
1600345 ..... 97, 101
1600346 ..... 23, 168
1600402 103
1600419 ..... 55, 168
1671090 23
1671096 43
1671098 97
1671105 ..... 51, 55
1671106 23
1671124 ..... 52, 56
1671131 98
1671155 43
1671161 98
1671175 43
1671180 43
1671181 23
1671182 23
1671196 ..... 43, 47
1671197 ..... 43, 47
1671200 47
1671202 47
1671203 48
1671204 47
1671207 144
1684237 ..... 11, 127, 131
1684257 ..... 73, 122
1684258 ..... 67, 122
1684260 ..... 73, 122
1684263 ..... 11, 127, 131
1684265 ..... 63, 122
1684302 ..... 69, 122
1700584 ..... 151, 157, 162
1701499 ..... 151, 158, 162
1701509 ..... 151, 157, 162
1702010 ..... 109, 113
1702155 ..... 151, 157, 162
1702773 ..... 151, 158, 162
1702928 162
1703464 .... 144, 151, 158, 162
1703811 ..... 151, 157, 162
1703813 151
1703814 ..... 151, 157, 162
1703819 ..... 97, 151, 157, 162
1703822 ..... 151, 157, 162
1703834 157
1703856 158
1704016 ..... 151, 157, 162
1704277 ..... 151, 157, 162
1704339 158
1704340 157
1704341 157
1704344 157
1704412 ..... 151, 157, 162
1705051 173
1705052 ..... 37, 173
1705213 ..... 115, 117
1705214 ..... 115, 117
1705303 159
1705304 172
1705305 ..... 115, 117
1705638 ..... 151, 158
1705639 ..... 151, 158
1705640 ..... 152, 159
1705641 ..... 152, 159
1705642 ..... 152, 159, 163
1705643 ..... 152, 159, 163
1705644 ..... 152, 159, 163
1705645 ..... 152, 159, 163
1705646 ..... 152, 159, 163
1705647 ..... 152, 159
1705648 163
1705666 162
1705667 162
1705668 163
1705670 162
1705671 162
1705673 162
1705674 97
1705675 97
1705676 97
1705679 ..... 151, 157
1705680 ..... 151, 157
1705681 ..... 151, 157
1705686 151
1705687 .... 151, 158, 162
1705692 .... 151, 157, 162
1705693 .... 151, 157, 162
1705694 ..... 151, 157
1705695 ..... 151, 157
1705696 ..... 51, 55
1705697 ..... 51, 55
1705698 ..... 51, 55
1705699 .... 151, 152, 158
1705704 163
1705717 158
1705718 158
1705719 158
1705720 157
1705721 157
1705722 157
1705723 157
1705724 158
1705725 158
1705726 157
1705727 157
1705754 ..... 48, 117, 151, 158, 162
1705792 113
1705793 113
1705819 163
1705850 .... 152, 159, 163
1705851 .... 152, 159, 163
1705880 .... 152, 158, 159
1705887 163
1705894 157
1705931 109
1705933 109
1705934 113
1705935 113
1705941 .... 151, 152, 158
1705942 163
1705943 158
1705944 158
1705945 158
1705946 157
1705953 ..... 115, 117
1705985 110
1705997 105
1706052 158
1706053 158
1706056 158
1706057 157
1706310 .... 152, 159, 163
1706311 ..... 152, 159
1706312 163
1706331 174
1706350 48
1706679 59
1706749 37
1706765 37
1706922 172
2030010 ..... 115, 117

2080040....81, 85, 89, 93, 151, 157, 162
2080057.....151, 157, 162
2080071.....63, 67, 69, 73
2110404.....11, 127, 131
2220882.....124
2220883.....123, 124
2300028.....173
2300042.....173
2400061.....105
2400066.....105
2420172.....51, 55
2460042.....173
2540042.....138
2540043.....78
2540045.....78
2560088.....81, 85, 89, 93
2560179.....97
2560181.....145
2600281.....81, 85, 90, 94
2700100.....105
2753882.....131
2753883.....131
2760113.....97
2760114.....97
2760115.....97
2760116.....97
2780266.....12
2792599.....131
2820026.....140
2820028.....139, 140
2820097.....82, 90, 94
2820239.....37
2860030.....51, 55, 166
2890186.....172
2901443.....145, 174
2902236.....74
2902239.....43, 140
2902240.....69
2902241.....67
2902242.....63
2902247.....93, 94
2902248.....43, 140
2902249.....81
2902250.....89
2902267.....173
2902294.....85
2902331.....59, 172
2902334.....115, 117
2902341.....98
2902346.....109
2902347.....109
2902348.....105
2902376.....89
2902381.....94
2902382.....90
2902383.....94
2902384.....85, 86
2902386.....107
2902391.....81
2902392.....81
2902405.....174
2902431.....145
2902502.....37
2902522.....173
2902523.....173
2902524.....173
2902525..... 173
2902526..... 173
2902528..... 173
2902532..... 173
2915016..... 172
2915039..... 51, 55
2915042..... 16
2915043..... 16
2915064..... 166
2915240..... 78
2915241..... 78
2915251..... 139
2915252..... 139
2915253..... 139
2920026..... 51, 55
2920094..... 51, 55
2920161..... 39, 144
2940064..... 82, 90, 94
2940151..... 43
2940153..... 43
2940174..... 47
2940175..... 48
3010088..... 82, 90, 94
3080006.... 81, 85, 90, 94
3080007..... 168
3125053..... 174
3128145..... 173
3128601..... 12
3128703..... 12
3160306..... 11, 20
3160307..... 12, 20
3200453.... 63, 67, 70, 74
3200454.... 63, 67, 70, 74
3251813..... 152, 159
3252098..... 158
3252507... 144, 151, 158, 162
3290405... 27, 29, 39, 98, 144
3290605... 24, 39, 43, 44, 47, 48
3290606... 24, 81, 85, 89, 93, 107, 109, 113, 115, 117, 140
3290607..... 139
3290805..... 37, 98
3290806.... 81, 85, 89, 93
3291005... 27, 29, 39, 63, 67, 69, 73, 74, 77, 78, 81, 85, 89, 93
3291007..... 69, 74
3300048..... 115, 117
3300423..... 12
3300473..... 97
3300474.... 63, 67, 70, 74
3300477..... 93
3310601..... 105
3311005..... 105
3311405..... 105
3311605..... 110
3321402..... 64, 125
3340612.... 81, 85, 89, 93
3340957..... 67, 69, 74
3340962.... 63, 67, 69, 73
3340964..... 63
3340965..... 77
3340968..... 97
3340975..... 44, 48
3340976..... 77
3380475..... 97
3380527..... 105
3420156.... 63, 67, 69, 73
3421453 . 85, 89, 93, 107, 109, 110, 117
3422219.... 105, 107, 109
3422997..... 67, 69, 73
3422998..... 67, 69, 73
3423009..... 73
3423011..... 73
3423013..... 78
3423014..... 67, 69, 73
3423016..... 67, 70, 74
3423017..... 67, 70, 74
3423026..... 73
3423030..... 63
3423031..... 63
3423032..... 63
3423033..... 63
3423036..... 67, 69
3423037..... 11
3423038..... 63, 67, 69
3423039..... 69
3423042..... 63
3423045..... 27, 29
3423046..... 27, 29
3423047.... 81, 85, 89, 93
3423049..... 77
3423067..... 69
3423170..... 74
3450406..... 12
3460334..... 105
3520072... 81, 85, 89, 93, 107, 109
3520176..... 109
3520193..... 51, 55
3574067..... 77
3574150..... 93
3574159..... 63
3574161..... 67, 69, 73
3574176..... 27, 29
3574183..... 81, 85, 89
3574184..... 81, 85, 89
3574249..... 97
3574330..... 51
3574427..... 43
3574428..... 43
3574505..... 113
3574506..... 113
3574636..... 162
3574714..... 23
3574843..... 31
3574981..... 47
3574984..... 47
3575794..... 98
3577112..... 12
3641480..... 81
3641481..... 81
3641482..... 81
3641534..... 85
3641535..... 85
3641536..... 85
3641582..... 93
3730119..... 139, 140
3740130..... 23
3740146.....23
3760115.....27, 29, 63
3760170..85, 89, 93, 105, 107, 109, 110, 117
3760348.....27, 29, 78
3760387.....67, 69, 73
3760463.....12
3820016....81, 82, 85, 90, 94
3820019.....81, 85, 89, 93
3820032.....48
3841143.....67, 69, 73
3841649.....85
3841667.....109
3841675.....107
3860085.....89
3860104.....73
3860106.....78
3860107.....69
3860108.....27, 29
3860110.....78
3860111.....44, 81, 85, 93
3860118.....78
3900267.....31
3900333.....97
3900334.....63, 67, 70, 74
3900335.....144
3900336.....51, 55
3900337.....51
3900338.....51, 55, 98
3900339.....51, 55
3900345.....81, 85, 89, 93
3900351.....77
3900355.....105
3900356.....55
3931010.....105
3931408.....105
3931412.....105
3931508.....105
3931620.....110
3990010.....141
3990013.....166
4000006.....55, 168
4010408.....144
4010415.....27, 29
4010608.....115, 117
4010614.....115, 117
4010616.....81, 85, 89, 93
4010617....81, 85, 89, 93, 115, 117, 140
4031607.....59
4031713.....43, 47
4060700.....144
4060865.....39
4061061.....51
4071094.....67, 69, 74
4071102.....48
4160078.....64, 125
4160202.....27, 29
4160203.....97
4191303.....51
4191306.....97
4191407.....97
4191409.....97
4191706....23, 24, 43, 59, 67, 70, 74, 107, 109

4191707 ... 31, 34, 37, 39, 43, 47
4191708 ..... 23, 63
4191709 ... 24, 63, 67, 70, 74
4220208 ..... 44, 48
4220227 ..... 107, 109
4240003 ... 105, 107, 109, 145
4240147 23
4240164 109
4240165 113
4240172 ..... 44, 48
4340739 55
4340751 24
4340853 105
4340854 105
4340860 115
4340909 109
4340910 109
4340911 110
4340914 78
4340938 117
4340946 107
4340947 107
4341055 174
4360069 ..... 51, 55, 166
4360155 ..... 115, 117
4360328 ..... 51, 55, 166
4360387 ..... 59, 145, 168
4360469 ..... 51, 55, 168
4360470 ..... 51, 55, 168
4360475 .. 51, 55, 97, 166
4360482 .... 145, 168, 173
4360502 ... 63, 67, 70, 74, 143
4360526 ... 63, 67, 70, 74, 143
4360535 51
4360536 ..... 27, 29, 141
4360538 ..... 97, 166
4360539 ..... 97, 143, 166
4360607 ..... 27, 29, 168
4360613 ..... 145, 168
4420037 113
4420051 162
4420062 .... 105, 107, 110
4420070 ... 39, 63, 64, 73, 74
4420071 78
4420072 78
4420073 78
4420074 78
4420075 78
4460071 144
4460138 145
4460205 145
4460226 ... 101, 141, 142, 145
4460227 31, 33, 101, 142, 144
4460265 .... 101, 138, 140
4460266 ..... 101, 143
4460267 ..... 33, 138, 140
4460268 ..... 140, 143
4460315 145
4460320 141
4460321 .... 140, 142, 145
4460328 ..... 115, 117
4460346 144
4460418 140
4460419 140
4460424 ..... 31, 143
4460464 31, 33, 105, 138, 140, 142, 143, 144
4460465 ... 105, 139, 140, 142, 143, 144
4460466 ... 138, 139, 140, 142
4460467 ..... 145, 174
4460493 ..... 139, 140
4460496 138
4460497 138
4460499 142
4460510 ..... 145, 174
4460536 ..... 143, 144
4460539 142
4460618 ..... 140, 141
4460633 145
4460648 ..... 31, 142, 143, 145
4460662 144
4460754 ..... 139, 140
4460761 ..... 140, 142
4460814 142
4460870 142
4460877 142
4460878 105
4460884 105
4460885 105
4460887 105
4460891 .... 142, 143, 144
4460894 ..... 139, 142
4460897 ..... 142, 143
4460899 31, 33, 139, 142, 143
4460930 ..... 139, 142
4460931 ..... 140, 142
4460943 140
4460944 ..... 139, 140
4460985 140
4461012 105
4461016 138
4461057 138
4520326 12
4520327 12
4520565 12
4520676 12
4530021 ..... 115, 117
4530026 105
4568631 ..... 81, 89
4568645 .... 81, 85, 89, 93
4568664 93
4568667 ..... 85, 89, 93
4568711 ..... 85, 89, 93
4568738 97
4711400 .... 105, 107, 109
4711600 110
4740086 ..... 27, 29
4740438 ..... 67, 69, 73
4740468 12
4740480 105
4740523 12
4740524 12
4740531 63
4740545 139
4740562 37
4750800 ..... 27, 29, 39
4751400 ..... 23, 24
4811400 ..... 39, 98
4811600 ..... 48, 59
4811700 .... 23, 24, 31, 34, 37, 39, 43, 44, 47, 109, 113
4811702 24
4811900 24
4812000 .... 11, 27, 29, 63, 67, 69, 73, 74, 77, 78, 81, 85, 89, 93
4831700 24
4846684 73
4846723 ..... 81, 85, 90, 94
4846752 69
4846757 11
4846761 78
4846764 78
4846766 78
4846768 78
4846770 93
4846771 93
4846772 93
4846773 27
4846774 ..... 27, 29
4846775 27
4846776 93
4846777 93
4846778 93
4846779 93
4846780 93
4846781 93
4846784 81
4846785 81
4846786 ..... 81, 85, 89, 93
4846788 29
4846789 78
4846791 89
4846792 89
4846793 89
4846794 ..... 85, 89
4846795 ..... 85, 89
4846796 ..... 85, 89
4846797 ..... 85, 89
4846799 89
4846800 89
4846810 29
4846811 29
4846812 39
4846813 39
4846816 27
4846861 27
4846862 29
4846863 27
4846876 109
4922861 ..... 24, 141
4922865 ..... 51, 56, 140
4922866 ..... 51, 140
4922870 ..... 97, 138
4922912 145
4922944 ..... 59, 145, 168, 172
4923048 ..... 115, 117
4923049 ..... 115, 117
4923050 ..... 115, 117
4923051 ..... 115, 117
4923052 ..... 115, 117
4923114 105
4923115 105
4923121 105
4923194 141
4923195 141
4923335 141
4923336 141
4933315 141
70000082 103
70000084 103
70000191 20
70000335 123
70000383 21
70000555 174
70000658 122
70000659 123
70000683 103
70000684 103
70000685 103
70000686 103
70000790 20
70000791 20
70000792 21
70001250 103
70001251 103
70001252 103
70001253 103
70001263 21
70001265 21
70001345 21
70001442 143
70001443 143
70001444 143
70001709 125
70001739 ..... 15, 20
70001878 ..... 64, 125
70001949 21
70001982 125
70002271 33
70003645 122
70003646 122
70003650 103
70004193 124
70007781 21
70010346 173
7002821 ..... 145, 174
7002822 174
7002823 ..... 145, 174
7002826 174
7002828 ..... 145, 174
7003790 101
7004275 174
7004276 174
7011509 31
7011528 33
7011997 101
7016319 39
7016372 39
7016654 174
7018514 ..... 31, 33
7018564 ..... 31, 33
7018570 33
7018577 ..... 31, 33

SECTION 10 - SPECIAL OPTIONS

7018583.....31, 144
7018586.....31, 33
7018589.....31, 33
7018597.....33
7019864.....122
7020175.....51, 55, 97
7020176.....51, 55, 97
7020218.....63, 125
7020500.....101, 166
7020501.....101, 166
7020551.....101
7020552.....101
7020553.....101
7020554.....101
7020555.....101
7020556.....101
7020603.....33
7020613.....31
7020663.....31
7020673.....31, 33
7020674.....31, 33
7022942.....33
7022944.....31
7022945.....31, 143
7022946.....31, 143
7022947.....31, 33
7022948.....31, 33
7022951.....33
7022952.....33
7022953.....33, 143
7022954.....33
7022955.....33, 143
7022956.....33
7022957.....33
7022958..... 33
7022959..... 33
7023528..... 124
7023529..... 124
7023530..... 124
7023531..... 124
7023532..... 124
7023533..... 124
7023534..... 124
7023535..... 122
7023536..... 124
7023537..... 124
7023538..... 124
7023539..... 122
7023540..... 124, 166
7023541..... 124, 166
7023542..... 124
7023543..... 124
7023544..... 124
7023545..... 124
7023546..... 124
7023547..... 124
7023548..... 124
7023549..... 122
7023550..... 124
7023551..... 124
7023552..... 124
7023553..... 124
7023554..... 124
7023555..... 124
7023556..... 124
7023557..... 122
7023558..... 122
7023559..... 127
7023560..... 127
7023561..... 127
7023562..... 127
7023563..... 127
7023564..... 127
7023565..... 127
7023566..... 127
7023567..... 127
7023568..... 122
7023569..... 122
7023570..... 122
7023571..... 123
7023572..... 123
7023573..... 123
7023574..... 123
7023575..... 123
7023576..... 123, 166
7023577..... 122
7023578..... 122
7023579..... 123
7023580..... 123
7023581..... 123
7023582..... 123
7023583..... 122
7023584..... 123
7023585..... 122
7023586..... 123
7023587..... 122
7023588..... 123
7023589..... 122
7023591..... 123
7023593..... 122, 166
7024747..... 16, 21
7024748..... 16, 21
7024749.....16, 21
7024750.....16, 21
7024751.....16
7024752.....142
7024753.....16
7024754.....15
7024755.....16
7024756.....16, 21
7024757.....15, 20
7024758.....16, 21
7024759.....16
7024761.....15
7024768.....142, 143
7024770.....143
7024771.....21
7024772.....21
7024773.....21
7024775.....143
7024776.....21
7024785.....16, 21
7024786.....15, 20
7024787.....21
7027303.....115, 117
7027365.....103
7027367.....103
7027765.....103
7027766.....103
7027862.....43
7027863.....48
8005670.....109, 110
80325.....107, 109
9984279.....77

3121246

An Oshkosh Corporation Company

Corporate Office
JLG Industries, Inc.
1 JLG Drive
McConnellsburg, PA 17233-9533
USA
☎ +1-717-485-5161 (Corporate)
☎ +1-877-554-5438 (Customer Support Toll Free)
+1-717-485-6417

JLG Worldwide Locations

JLG Industries
358 Park Road
Regents Park
NSW 2143
Sydney 2143
Australia
☎ +6 (12) 87186300
+6 (12) 65813058
Email: techservicesaus@jlg.com

JLG Ground Support Oude
Bunders 1034
Breitwaterstraat 12A
3630 Maasmechelen
Belgium
☎ +32 (0)89 84 82 26
Email: emeaservice@jlg.com

JLG Latino Americana LTDA
Rua Antonia Martins Luiz, 580
Distrito Industrial Joao Narezzi
Indaiatuba-SP 13347-404
Brasil
☎ +55 (19) 3936 7664 (Parts)
☎ +55 (19) 3936 9049 (Service)
Email: comercialpecas@jlg.com
Email: servicos@jlg.com

Oshkosh-JLG (Tianjin)
Equipment Technology LTD
Shanghai Branch
No 465 Xiao Nan Road
Feng Xian District
Shanghai 201204
China
☎ +86 (21) 800 819 0050

JLG Industries Dubai
Jafza View
PO Box 262728, LB 19
20th Floor, Office 05
Jebel Ali, Dubai
☎ +971 (0) 4 884 1131
+971 (0) 4 884 7683
Email: emeaservice@jlg.com

JLG France SAS
Z.I. Guillaume Mon Amy
30204 Fauillet
47400 Tonniens
France
☎ +33 (0) 553 84 85 86
+33 (0) 553 84 85 74
Email: pieces@jlg.com

JLG Deutschland GmbH
Max Planck Str. 21
27721 Ritterhude-Ihlpohl
Germany
☎ +49 (0) 421 69350-0
+49 (0) 421 69350-45
Email: german-parts@jlg.com

JLG Equipment Services Ltd.
Rm 1107 Landmark North
39 Lung Sum Avenue
Sheung Shui N. T.
Hong Kong
☎ +(852) 2639 5783
+(852) 2639 5797

JLG Industries (Italia) S. R. L.
Via Po, 22
IT-20010 Pregnana Milanese (MI)
Italy
☎ +39 (0) 2 9359 5210
+39 (0) 2 9359 5211
Email: ricambi@jlg.com

JLG EMEA B.V.
Polaris Avenue 63
2132 JH Hoofdorf
The Netherlands
☎ +31 (0) 23 565 5665
Email: emeaservice@jlg.com

JLG NZ Access Equipment & Services
2B Fisher Cresent
Mt Wellington 1060
Auckland, New Zealand
☎ +6 (12) 87186300
+6 (12) 65813058
Email: techservicesaus@jlg.com

JLG Industries
Vahutinskoe shosse 24b
Khimki,
Moscow Region 141400
Russia Federation
☎ +7 (499) 922 06 99
+7 (499) 922 06 99

Oshkosh-JLG Singapore
Technology Equipment P te Ltd.
35 Tuas Avenue 2
Jurong Industrial Estate
Singapore 639454
☎ +65 6591 9030
+65 6591 9045
Email: SEA@jlg.com

JLG Iberica S. L.
Trapadella, 2
Pol. Ind. Castellbisbal Sur
08755 Castellbisbal
Barcelona
Spain
☎ +34 (0) 93 772 47 00
+34 (0) 93 77 117 62
Email: parts_iberica@jlg.com

JLG Sverige AB
Enkopingsvagen 150
17627 Jarfalla
Sweden
☎ +46 (0) 8 506 595 00
+46 (0) 8 506 595 27
Email: nordicsupport@jlg.com

JLG Industries (UK) Ltd.
Bentley House
Bentley Avenue
Middleton, Greater Manchester
M24 2GP
United Kingdom
☎ +44 (0) 161 654 1000
+44 (0) 161 654 1003
Email: ukparts@jlg.com

www.jlg.com