Illustrated Parts Manual

Models

10ML
12MLC
15ML
18MLC
20ML
24MLC
25ML

P/N
31211318

May 1, 2018

ANSI

An Oshkosh Corporation Company

REVISION LOG

May 1, 2018 - Original Issue (Edited to 1001235000 Revision A)

GENERAL INFORMATION

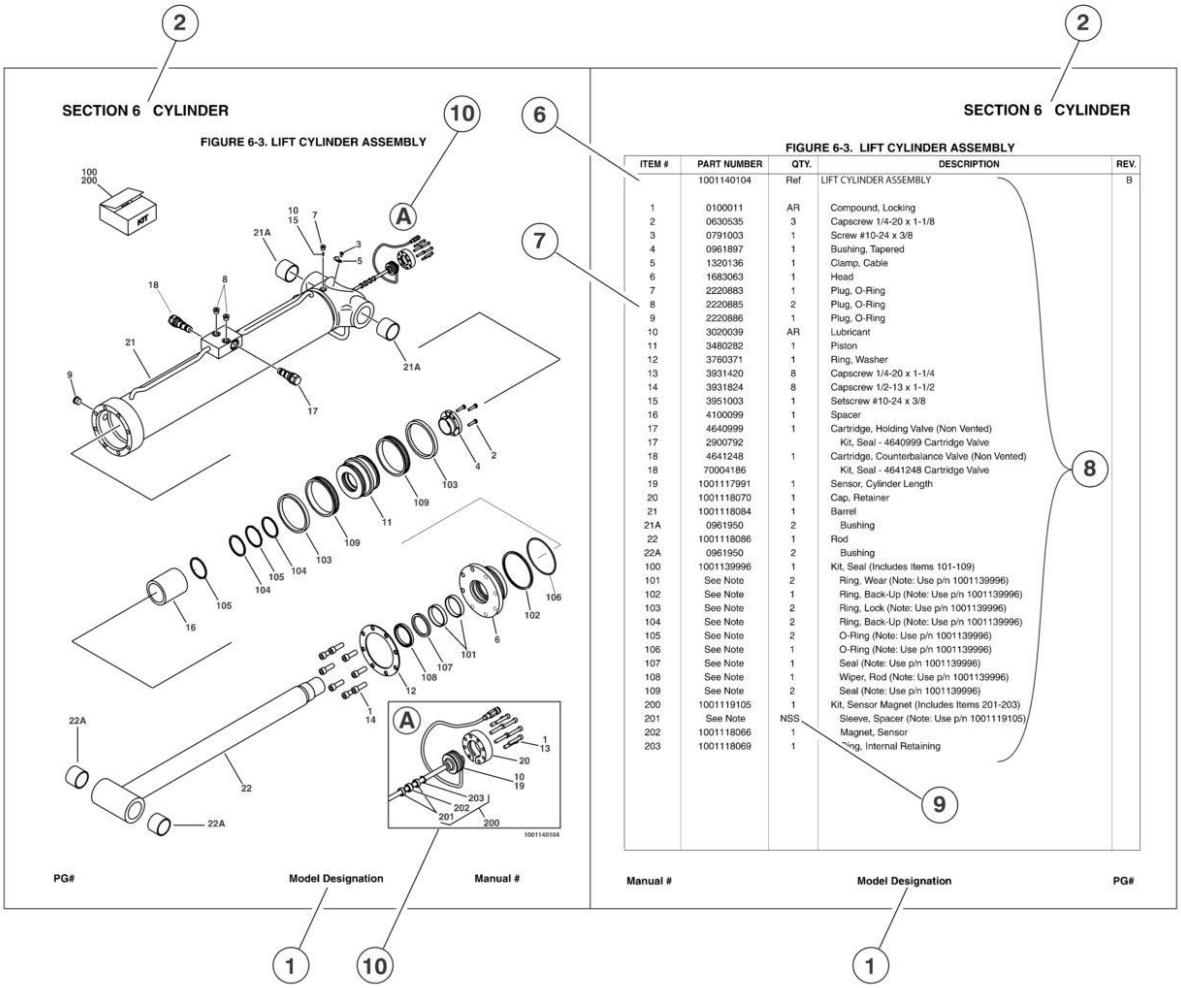

ITEM #	PART NUMBER	QTY.	DESCRIPTION	REV.
	1001140104	Ref.	LIFT CYLINDER ASSEMBLY	B
1	0100011	AR	Compound, Locking	
2	0630535	3	Capscrew 1/4-20 x 1-1/8	
3	0791003	1	Screw #10-24 x 3/8	
4	0961897	1	Bushing, Tapered	
5	1320136	1	Clamp, Cable	
6	1683063	1	Head	
7	2220883	1	Plug, O-Ring	
8	2220885	2	Plug, O-Ring	
9	2220886	1	Plug, O-Ring	
10	3020039	AR	Lubricant	
11	3480282	1	Piston	
12	3760371	1	Ring, Washer	
13	3931420	8	Capscrew 1/4-20 x 1-1/4	
14	3931824	8	Capscrew 1/2-13 x 1-1/2	
15	3951003	1	Setscrew #10-24 x 3/8	
16	4100099	1	Spacer	
17	4640999	1	Cartridge, Holding Valve (Non Vented)	
17	2900792		Kit, Seal - 4640999 Cartridge Valve	
18	4641248	1	Cartridge, Counterbalance Valve (Non Vented)	
18	70004186		Kit, Seal - 4641248 Cartridge Valve	
19	1001117991	1	Sensor, Cylinder Length	
20	1001118070	1	Cap, Retainer	
21	1001118084	1	Barrel	
21A	0961950	2	Bushing	
22	1001118086	1	Rod	
22A	0961950	2	Bushing	
100	1001139996	1	Kit, Seal (Includes Items 101-109)	
101	See Note	2	Ring, Wear (Note: Use p/n 1001139996)	
102	See Note	1	Ring, Back-Up (Note: Use p/n 1001139996)	
103	See Note	2	Ring, Lock (Note: Use p/n 1001139996)	
104	See Note	2	Ring, Back-Up (Note: Use p/n 1001139996)	
105	See Note	2	O-Ring (Note: Use p/n 1001139996)	
106	See Note	1	O-Ring (Note: Use p/n 1001139996)	
107	See Note	1	Seal (Note: Use p/n 1001139996)	
108	See Note	1	Wiper, Rod (Note: Use p/n 1001139996)	
109	See Note	2	Seal (Note: Use p/n 1001139996)	
200	1001119105	1	Kit, Sensor Magnet (Includes Items 201-203)	
201	See Note	NSS	Sleeve, Spacer (Note: Use p/n 1001119105)	
202	1001118066	1	Magnet, Sensor	
203	1001118069	1	Ring, Internal Retaining	

Manual # Model Designation PG#

1) MACHINE IDENTIFICATION
Machines are identified by model and in some cases a combination of models, serial number (SN) or regional standard (i.e ANSI, CE,CSA). Components may also be identified by SN or manufacturer. common components that may be identified by these characteristics are engines and hydraulic components.

2) PARTS MANUAL ORGANIZATION
Product information in this manual is organized under section titles. Frame, Cylinder, Hydraulic and Electrical are a few examples. Each section is organized by figure and page number. The information within the Figure is then organized by item number, part number, description and corresponding illustration (s).

3) TABLE OF CONTENTS
A table of contents is found toward the beginning of the manual. Figure number, description and page number are provided for quick reference to the page containing the related information.

4) RECOMMENDED SPARE PARTS
The Recommended Spare Parts, located near the end of the manual, referance most frequently used maintenance parts.

5) PART NUMBER INDEX
A numerical index listing all part numbers and the corresponding page number(s) appears at the back of the manual.

GENERAL INFORMATION

6) NON-SERVICED PARTS

In some instances, it is necessary to display non-serviced parts, assemblies or installations. In the case of assemblies and installations there will be a Ref in the Qty column. In case of parts that are not available for service within assemblies or components, there will be a NSS (Not Sold Separately) or NLA (No Longer Available) listed in the Qty. column of the manual.

7) PARTS LIST ITEM NUMBERS

Numbers shown in the item# column correspond to numbers used in the associated illustration (s). Item numbers which are missing from the sequence in the parts list are not used on that page

8) INDENTED PARTS DESCRIPTION

An indented part description is included in the item under which it is indented.

9) ABB REVIATION AND SYMBOLS

AC ..... Alternating Current
ADE. ..... Advanced Design Electronics
ANSI ..... American National Standards Institute
AR.. ..... As Required
ASSY ..... Assembly
AUX... ..... Auxiliary
AWG ..... American Wire Gauge
B/M.. ..... Bill of Material
CE.. ..... European Conformity
CCW ..... Counter Clockwise
cm. ..... Centimeter
CW ..... Clockwise
CSA. ..... Canadian Standards Association
CYL... ..... Cylinder
DIA. ..... Diameter
DC ..... Direct Current
EMS ..... Emergency Stop
ENG ..... Engine
FT(ft).. ..... Feet
GA(Ga).. ..... Gauge
HYD ..... Hydraulic
Hz.. ..... Hertz
ID.. ..... Inside Diameter
in... ..... inches
ISO ..... International Organization for Standards
JIC ..... Joint Industry Council
KG ..... Kilogram
L.. ..... Liter
LB ..... Pounds
LCD ..... Liquid Crystal Display
LED ..... Light Emitting Diodes
LH... ..... Left Hand
LSS ..... Load Sensing System
M(m)... ..... Metric/Meter
MM (mm) ..... Milimeter
mA. ..... Miliamps
NLA..... No Longer Available
NPT ..... National Pipe Threads
NSS ..... Not Sold Separately
OD.. ..... Outside Diameter
ORB ..... O-Ring Boss
ORFS ..... O-Ring Face Seal
OZ (oz). ..... Ounces
PG ..... Page
P/N. ..... Part Number
qt. ..... Quarts
QTY. ..... Quantity
REF ..... Reference
REV ..... Revision Level
RH... ..... Right Hand
SAE..... Society of Automotive Engineers
SN.. ..... Serial Number
SPEC(S)..... Specifications
T/T. ..... Turntable
UGM ..... Universal Ground Module
V. ..... Volts
W... ..... Watts
#... ..... Number

10) ILLUSTRATION REFERANCE LETTERS

When necessary, illustrations may contain referance letters that are intended to track information (i. e. hoses, harnesses) from one point to another or to track visual enlargement of components to show details that may be located in another area on the illustration.

Note: Due to continuous product improvements, JLG Industries, Inc. reserves the right to make specification changes without prior notification. Contact JLG Industries, Inc. for updated information.

TABLE OF CONTENTS

SECTION 1 - BASE 9

FIGURE 1-1. BASE INSTALLATION (10ML,12MLC,15ML) 10
FIGURE 1-2. BASE INSTALLATION (18MLC,20ML,24MLC,25ML) 12
FIGURE 1-3. STABILIZERS INSTALLATION 14
FIGURE 1-4. TRANSPORT WHEELS INSTALLATION 16

SECTION 2 - CONTROLS 19

FIGURE 2-1. WINCH INSTALLATION - MANUAL 20
FIGURE 2-2. WINCH INSTALLATION - DRILL DRIVEN 22

SECTION 3 - MAST 25

FIGURE 3-1. MAST ASSEMBLY (10ML) 26
FIGURE 3-2. MAST ASSEMBLY (12MLC) 28
FIGURE 3-3. MAST ASSEMBLY (15ML) 30
FIGURE 3-4. MAST ASSEMBLY (18MLC) 32
FIGURE 3-5. MAST ASSEMBLY (20ML) 36
FIGURE 3-6. MAST ASSEMBLY (24MLC) 40
FIGURE 3-7. MAST ASSEMBLY (25ML) 44
FIGURE 3-8. MANUAL STORAGE TUBE INSTALLATION 48

SECTION 4 - FORK ACCESSORIES 51

FIGURE 4-1. FORK INSTALLATION - STANDARD 52

SECTION 5 - DECALS 55

SECTION 6 - RECOMMENDED SERVICE PARTS STOCK 57

PART NUMBER INDEX 59

SECTION 1 - BASE

FIGURE 1-1. BASE INSTALLATION (10ML,12MLC,15ML)

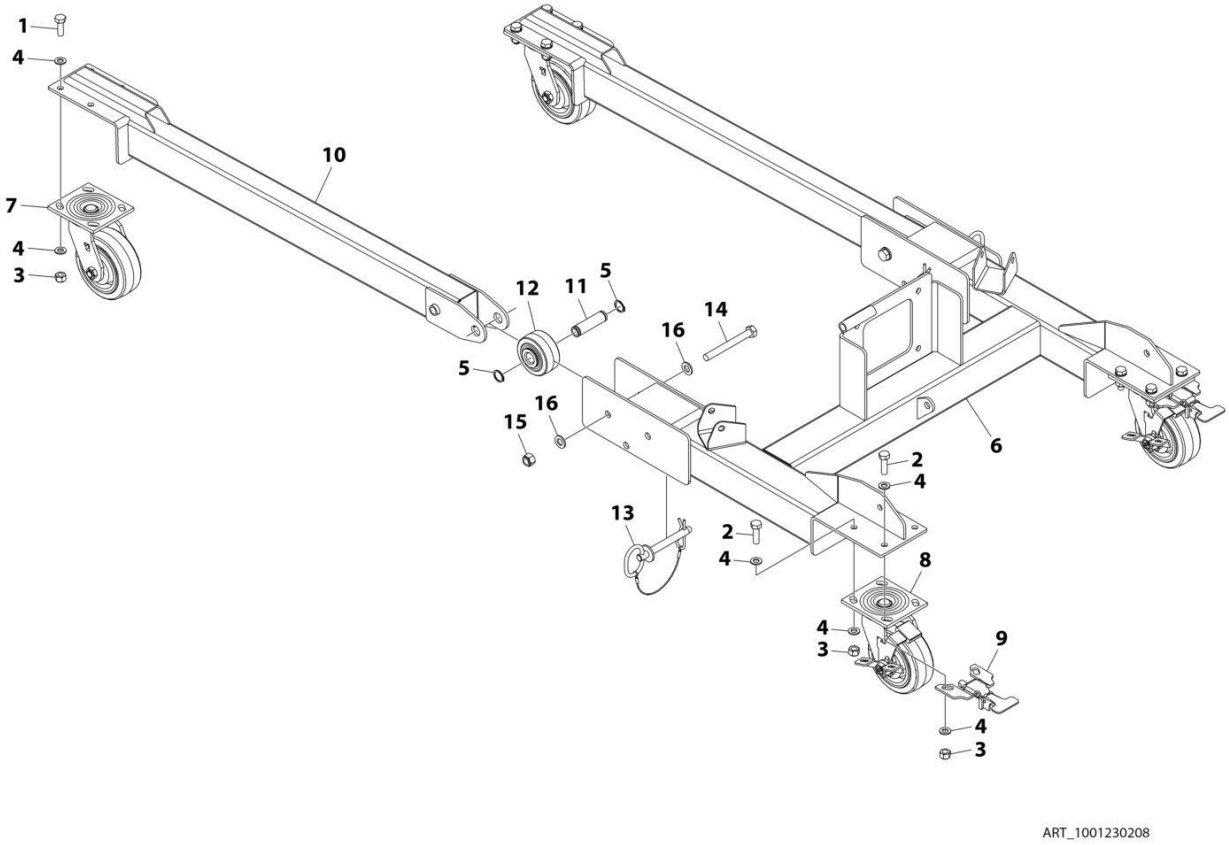

FIGURE 1-1. BASE INSTALLATION (10ML,12MLC,15ML)

ITEM	PART NUMBER	QTY	DESCRIPTION	REV
	1001230208	Ref	BASE INSTALLATION	C
1	0761014	8	Bolt M10 x 30	
2	0761015	8	Bolt M10 x 35	
3	3291005	16	Nut M10	
4	4812000	32	Washer M10	
5	1001149581	4	Ring, Retaining	
6	1001230072	1	Frame	
7	1001230117	2	Wheel	
8	1001230118	2	Wheel With Brake	
9	1001230119	2	Lock, Wheel	
10	1001230919	2	Bar, Stabilizer	
11	1001232043	2	Rollpin	
12	1001232284	2	Roller	
13	1001233977	2	Pin	
14	0711228	2	Bolt M12 x 110	
15	3291205	2	Nut M12	
16	4812100	4	Washer M12	

FIGURE 1-2. BASE INSTALLATION (18MLC,20ML,24MLC,25ML)

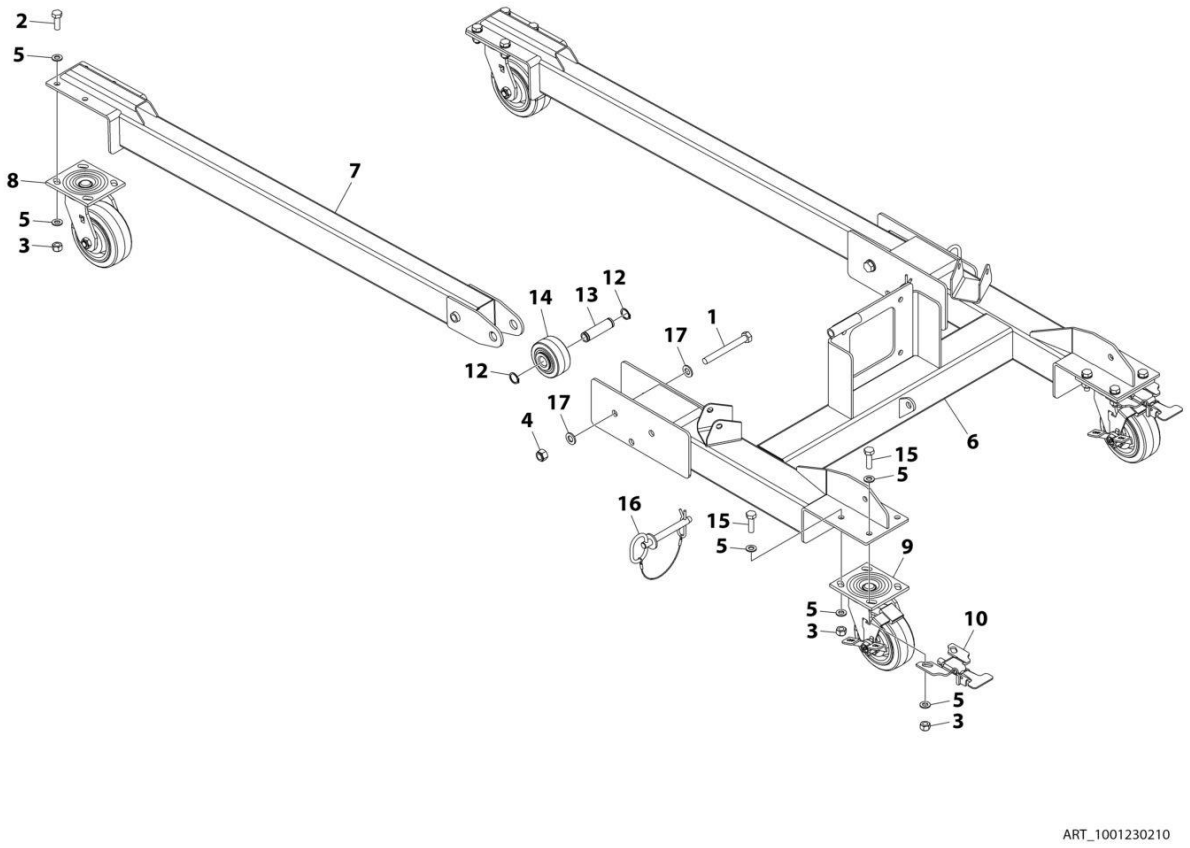

FIGURE 1-2. BASE INSTALLATION (18MLC,20ML,24MLC,25ML)

ITEM	PART NUMBER	QTY	DESCRIPTION	REV
	1001230210	Ref	BASE INSTALLATION	D
1	0711228	2	Bolt M12 x 110	
2	0761014	8	Bolt M10 x 30	
3	3291005	16	Nut M10	
4	3291205	2	Nut M12	
5	4812000	32	Washer M10	
6	1001230072	1	Frame	
7	1001230082	2	Bar, Stabilizer	
8	1001230117	2	Wheel	
9	1001230118	2	Wheel With Brake	
10	1001230119	2	Lock, Wheel	
12	1001149581	4	Ring, Retaining	
13	1001232043	2	Rollpin	
14	1001232284	2	Roller	
15	0761015	8	Bolt M10 x 35	
16	1001233977	2	Pin	
17	4812100	4	Washer M12	

FIGURE 1-3. STABILIZERS INSTALLATION

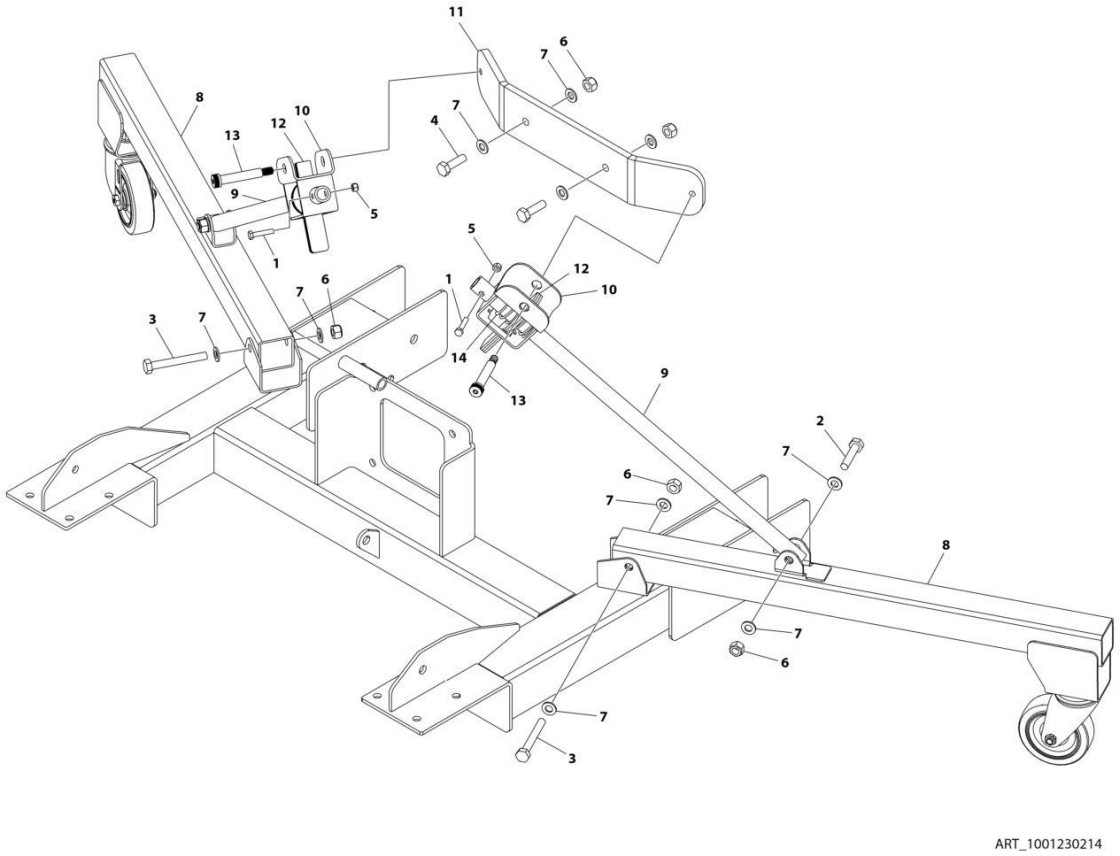

FIGURE 1-3. STABILIZERS INSTALLATION

ITEM	PART NUMBER	QTY	DESCRIPTION	REV
	1001230214	Ref	STABILIZERS INSTALLATION	C
1	0700614	2	Bolt M6 x 30	
2	0701018	2	Bolt M10 x 50	
3	0701024	2	Bolt M10 x 80	
4	0761015	2	Bolt M10 x 35	
5	3290605	2	Nut M6	
6	3291005	6	Nut M10	
7	4812000	12	Washer M10	
8	1001230089	2	Stabilizer	
9	1001230094	2	Tube	
10	1001230095	2	Clamp	
11	1001233255	1	Plate	
12	1001230604	6	Tab	
13	1001231232	2	Screw M12 x 60	
14	1001234392	2	Spring	

FIGURE 1-4. TRANSPORT WHEELS INSTALLATION

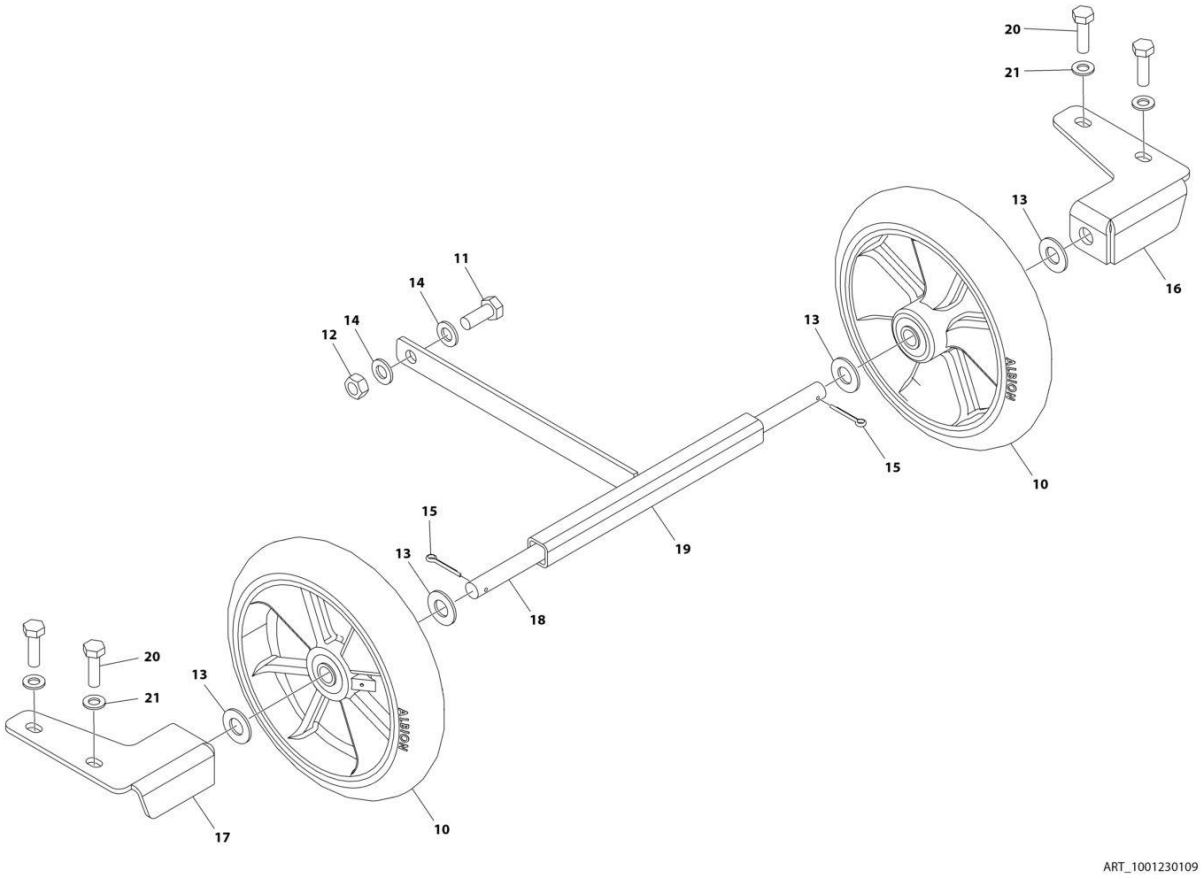

FIGURE 1-4. TRANSPORT WHEELS INSTALLATION

ITEM	PART NUMBER	QTY	DESCRIPTION	REV
	1001230109	Ref	TRANSPORT WHEELS INSTALLATION	C
10	1001230116	2	Wheel	
11	0701214	1	Bolt M12 x 30	
12	3291201	1	Nut M12	
13	4712000	4	Washer 5/8	
14	4812100	2	Washer M12	
15	3450404	2	Pin, Cotter	
16	1001232858	1	Bracket (RH)	
17	1001232859	1	Bracket (LH)	
18	1001232860	1	Axle	
19	1001232864	1	Support	
20	0761015	4	Bolt M10 x 35	
21	4812000	4	Washer M10	

SECTION 2 - CONTROLS

FIGURE 2-1. WINCH INSTALLATION - MANUAL

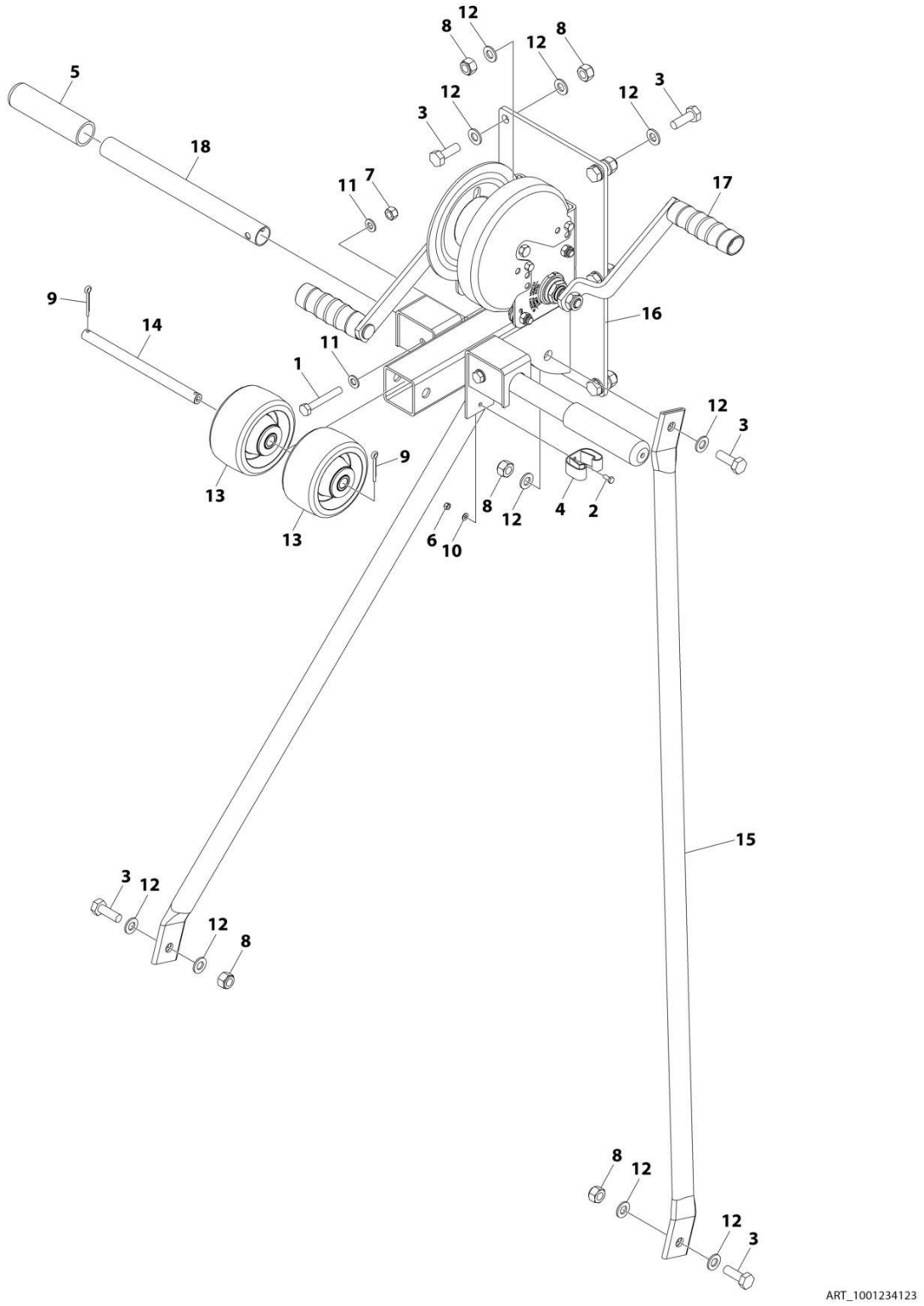

FIGURE 2-1. WINCH INSTALLATION - MANUAL

ITEM	PART NUMBER	QTY	DESCRIPTION	REV
	1001234123	Ref	WINCH INSTALLATION	A
1	0700819	2	Bolt M8 x 55	
2	0760405	2	Bolt M4 x 10	
3	0761014	13	Bolt M10 x 30	
4	1380136	2	Clip	
5	2560088	2	Grip, Handle	
6	3290405	2	Nut M4	
7	3290805	2	Nut M8	
8	3291005	13	Nut M10	
9	3450404	2	Pin, Cotter	
10	4811400	2	Washer M4	
11	4811900	4	Washer M8	
12	4812000	26	Washer M10	
13	1001100945	2	Wheel	
14	1001229687	1	Axle	
15	1001230098	2	Support	
16	1001233245	1	Mount, Handle and Winch	
17	1001233486	1	Winch Assembly	
18	1001233489	2	Handle	

FIGURE 2-2. WINCH INSTALLATION - DRILL DRIVEN

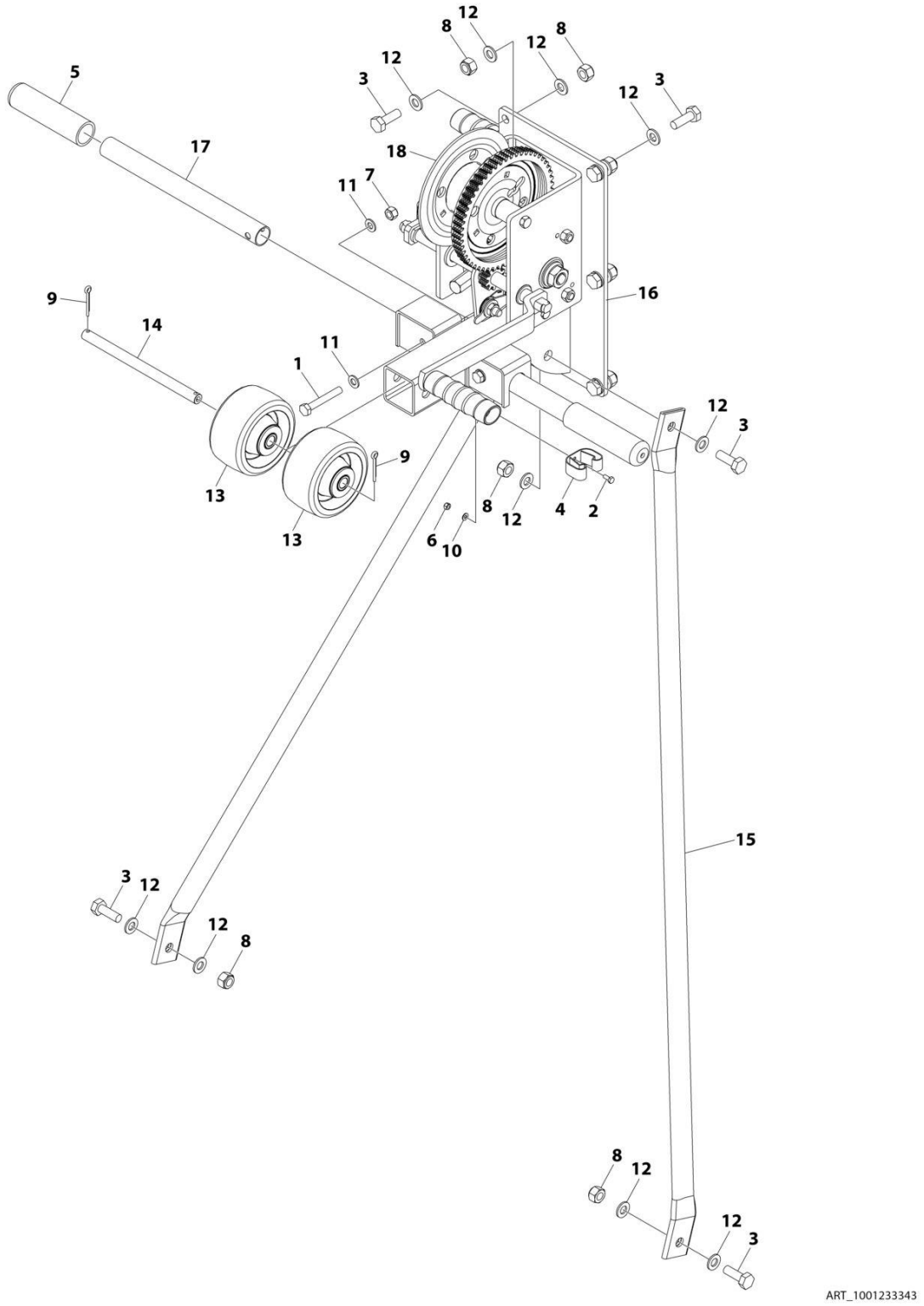

FIGURE 2-2. WINCH INSTALLATION - DRILL DRIVEN

ITEM	PART NUMBER	QTY	DESCRIPTION	REV
	1001233343	Ref	WINCH INSTALLATION	A
1	0700819	2	Bolt M8 x 55	
2	0760405	2	Bolt M4 x 10	
3	0761014	13	Bolt M10 x 30	
4	1380136	2	Clip	
5	2560088	2	Grip, Handle	
6	3290405	2	Nut M4	
7	3290805	2	Nut M8	
8	3291005	13	Nut M10	
9	3450404	2	Pin, Cotter	
10	4811400	2	Washer M4	
11	4811900	4	Washer M8	
12	4812000	26	Washer M10	
13	1001100945	2	Wheel	
14	1001229687	1	Axle	
15	1001230098	2	Support	
16	1001233245	1	Mount, Handle And Winch	
17	1001233489	2	Handle	
18	1001235381	1	Winch Assembly	

SECTION 3 - MAST

FIGURE 3-1. MAST ASSEMBLY (10ML)

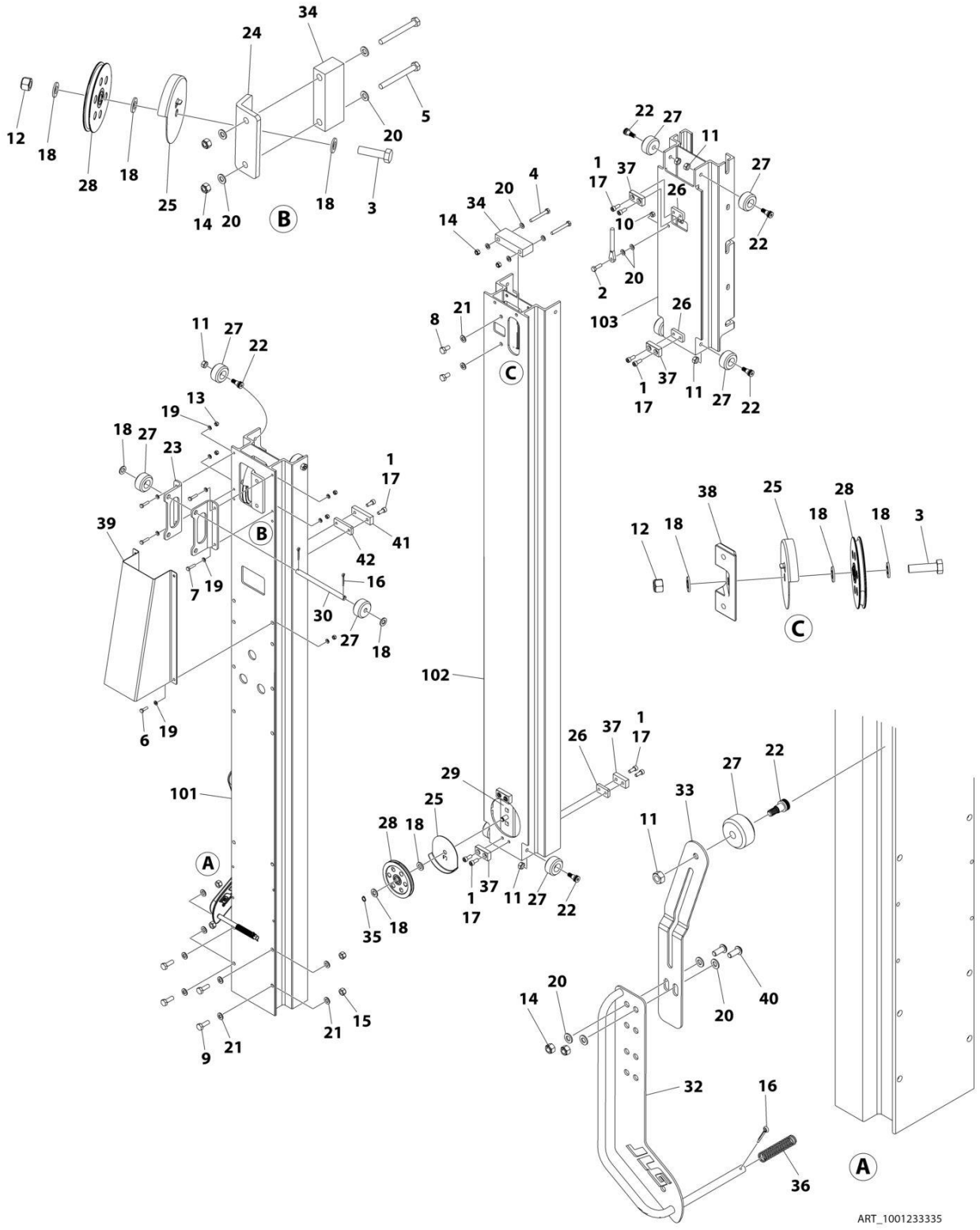

FIGURE 3-1. MAST ASSEMBLY (10ML)

ITEM	PART NUMBER	QTY	DESCRIPTION	REV
	1001233335	Ref	MAST ASSEMBLY	B
1	0100011	AR	Compound, Locking	
2	0681508	1	Bolt 5/16 x 1	
3	0761217	2	Bolt M12 x 45	
4	0700821	2	Bolt M8 x 65	
5	0700823	2	Bolt M8 x 75	
6	0760610	4	Bolt M6 x 20	
7	0760612	4	Bolt M6 x 25	
8	0761010	2	Bolt M10 x 20	
9	0761014	4	Bolt M10 x 30	
10	3271505	1	Nut 5/16	
11	3291007	9	Nut M10	
12	3291205	2	Nut M12	
13	3290605	8	Nut M6	
14	3290805	6	Nut M8	
15	3291005	4	Nut M10	
16	3450404	3	Pin, Cotter	
17	4031908	16	Capscrew M8 x 20	
18	4812100	10	Washer M12	
19	4811700	16	Washer M6	
20	4811900	14	Washer M8	
21	4812000	10	Washer M10	
22	1001237399	9	Screw M12	
23	1001229669	2	Mount, Upper Roller	
24	1001229670	1	Mount, Base Pulley	
25	1001229671	3	Cover, Pulley	
26	1001229672	5	Plate	
27	1001229675	11	Roller	
28	1001229676	3	Pulley	
29	1001229678	1	Mount, Lower Pulley	
30	1001229687	1	Tube	
31	1001230167	1	Cable (Not Shown)	
32	1001230769	1	Bracket	
33	1001230774	1	Bracket	
34	1001231382	2	Block, Spacer	
35	1001237386	1	Ring, Retaining	
36	1001232217	1	Spring	
37	1001232938	7	Stop	
38	1001232939	1	Mount, Upper Pulley	
39	1001233240	1	Cover	
40	1001164726	2	Screw M8 x 20	
41	1001237251	1	Block, Stop	
42	1001237252	1	Plate	
	1001233461	Ref	MAST KIT - 10ML	
101	1001232193	1	Base, Mast	
102	1001232194	1	Mid, Mast	
103	1001232196	1	Carriage, Lift	

FIGURE 3-2. MAST ASSEMBLY (12MLC)

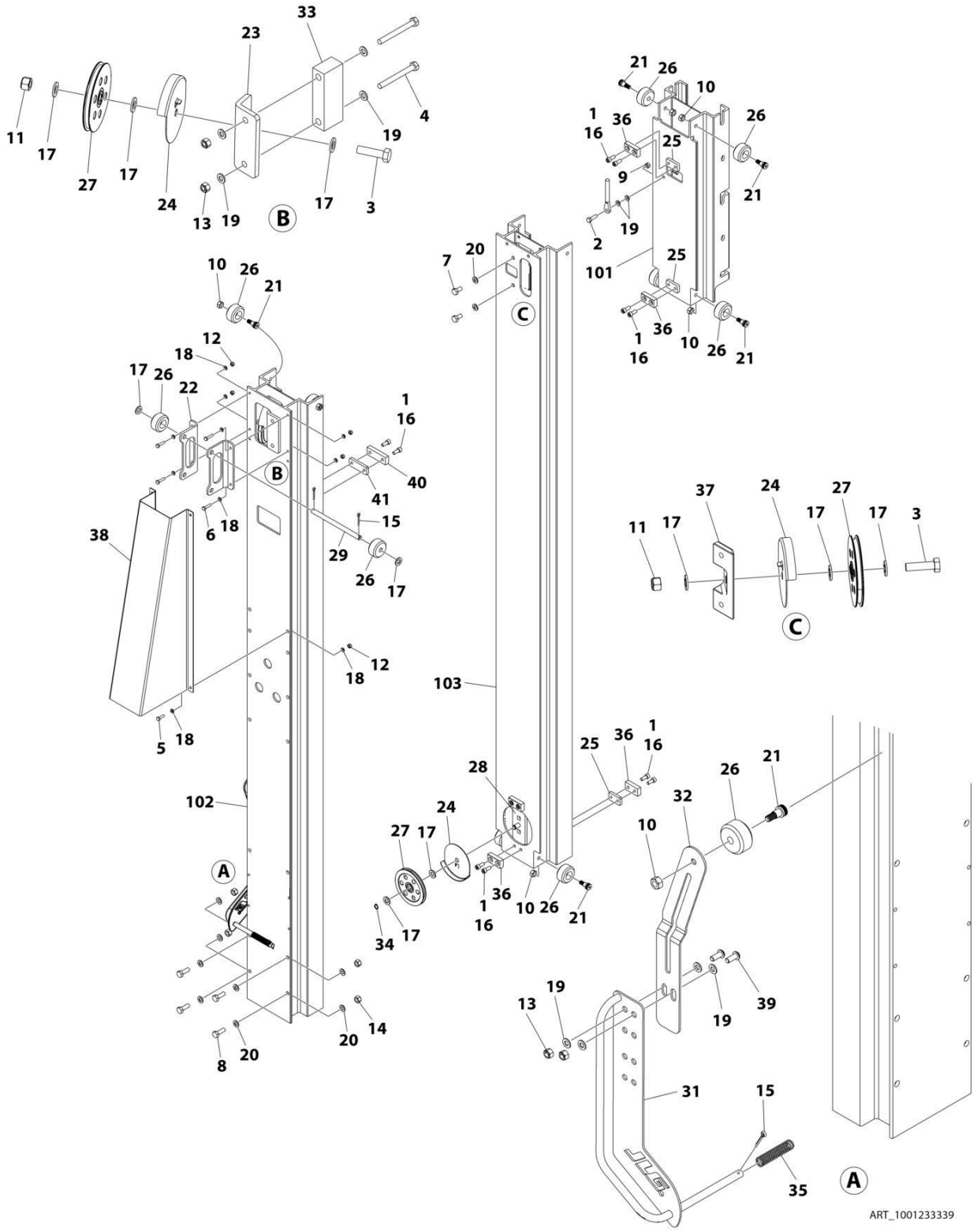

FIGURE 3-2. MAST ASSEMBLY (12MLC)

ITEM	PART NUMBER	QTY	DESCRIPTION	REV
	1001233339	Ref	MAST ASSEMBLY	C
1	0100011	AR	Compound, Locking	
2	0681508	1	Bolt 5/16 x 1	
3	0761217	2	Bolt M12 x 45	
4	0700823	2	Bolt M8 x 75	
5	0760610	4	Bolt M6 x 20	
6	0760612	4	Bolt M6 x 25	
7	0761010	2	Bolt M10 x 20	
8	0761014	4	Bolt M10 x 30	
9	3271505	1	Nut 5/16	
10	3291007	9	Nut M10	
11	3291205	2	Nut M12	
12	3290605	8	Nut M6	
13	3290805	4	Nut M8	
14	3291005	4	Nut M10	
15	3450404	3	Pin, Cotter	
16	4031908	16	Capscrew M8 x 20	
17	4812100	10	Washer M12	
18	4811700	16	Washer M6	
19	4811900	10	Washer M8	
20	4812000	10	Washer M10	
21	1001237399	9	Screw M12	
22	1001229669	2	Mount, Upper Roller	
23	1001229670	1	Mount, Base Pulley	
24	1001229671	3	Cover, Pulley	
25	1001229672	5	Plate	
26	1001229675	11	Roller	
27	1001229676	3	Pulley	
28	1001229678	1	Mount, Lower Pulley	
29	1001229687	1	Tube	
30	1001230171	1	Cable (Not Shown)	
31	1001230769	1	Bracket	
32	1001230774	1	Bracket	
33	1001231382	1	Block	
34	1001237386	1	Ring, Retaining	
35	1001232217	1	Spring	
36	1001232938	7	Stop	
37	1001232939	1	Mount, Upper Pulley	
38	1001233381	1	Plate	
39	1001164726	2	Screw M8 x 20	
40	1001237251	1	Block, Stop	
41	1001237252	1	Plate	
	1001233465	Ref	MAST KIT	
101	1001232196	1	Carriage, Lift	
102	1001232340	1	Base, Mast	
103	1001232341	1	Mid, Mast	

FIGURE 3-3. MAST ASSEMBLY (15ML)

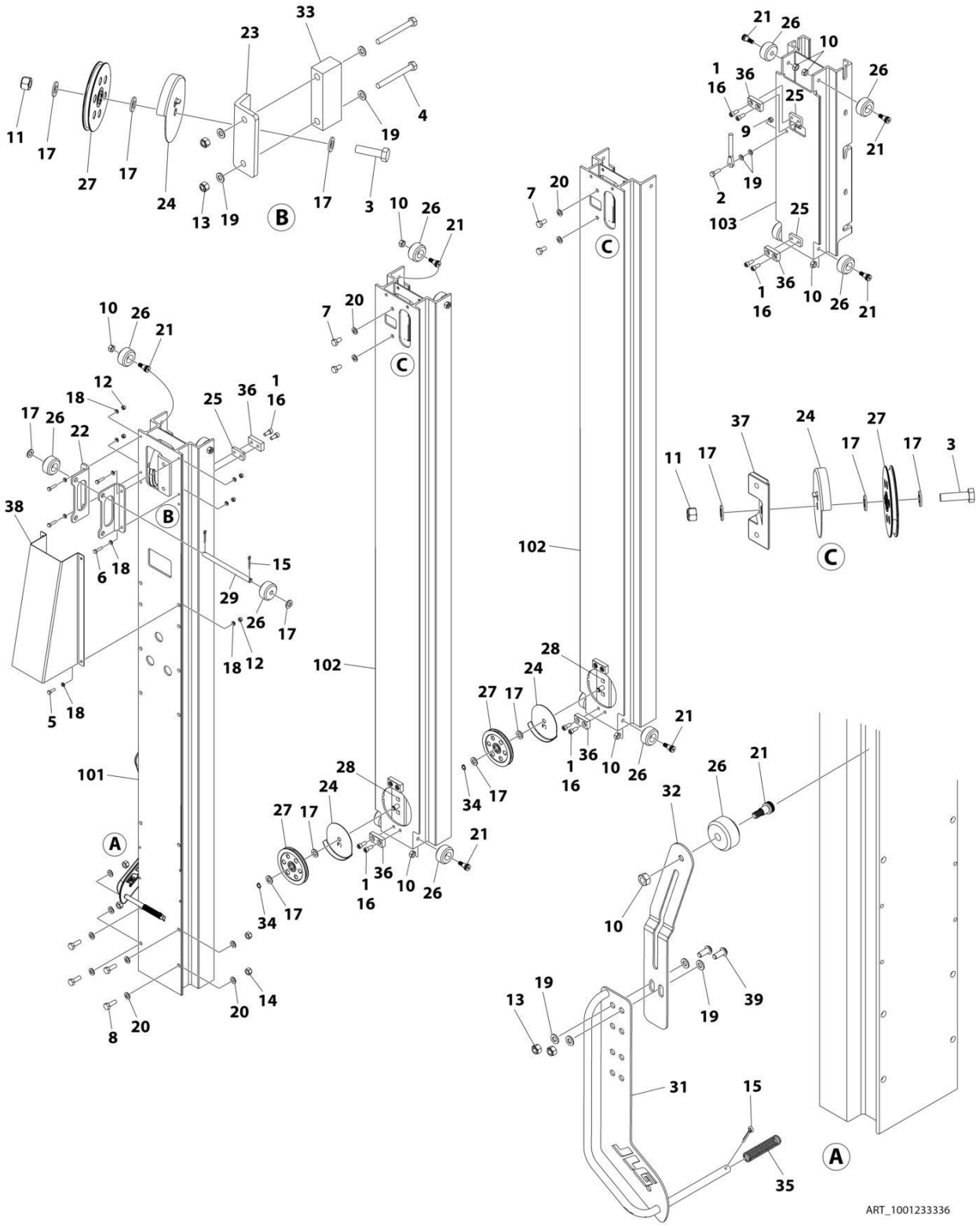

FIGURE 3-3. MAST ASSEMBLY (15ML)

ITEM	PART NUMBER	QTY	DESCRIPTION	REV
	1001233336	Ref	MAST ASSEMBLY	B
1	0100011	AR	Compound, Locking	
2	0681508	1	Bolt 5/16 x 1	
3	0761217	3	Bolt M12 x 45	
4	0700823	2	Bolt M8 x 75	
5	0760610	4	Bolt M6 x 20	
6	0760612	4	Bolt M6 x 25	
7	0761010	4	Bolt M10 x 20	
8	0761014	4	Bolt M10 x 30	
9	3271505	1	Nut 5/16	
10	3291007	13	Nut M10	
11	3291205	3	Nut M12	
12	3290605	8	Nut M6	
13	3290805	4	Nut M8	
14	3291005	4	Nut M10	
15	3450404	3	Pin, Cotter	
16	4031908	24	Capscrew M8 x 20	
17	4812100	15	Washer M12	
18	4811700	16	Washer M6	
19	4811900	10	Washer M8	
20	4812000	12	Washer M10	
21	1001237399	13	Screw M12	
22	1001229669	2	Mount, Upper Roller	
23	1001229670	1	Mount, Base Pulley	
24	1001229671	5	Cover, Pulley	
25	1001229672	8	Plate	
26	1001229675	15	Roller	
27	1001229676	5	Pulley	
28	1001229678	2	Mount, Lower Pulley	
29	1001229687	1	Tube	
30	1001230168	1	Cable (Not Shown)	
31	1001230769	1	Bracket	
32	1001230774	1	Bracket	
33	1001231382	1	Block	
34	1001237386	2	Ring, Retaining	
35	1001232217	1	Spring	
36	1001232938	12	Stop	
37	1001232939	2	Mount, Upper Pulley	
38	1001233240	1	Cover	
39	1001164726	2	Screw M8 x 20	
	1001233462	Ref	MAST KIT	
101	1001232193	1	Base, Mast	
102	1001232194	2	Mid, Mast	
103	1001232196	1	Carriage, Lift	

FIGURE 3-4. MAST ASSEMBLY (18MLC)

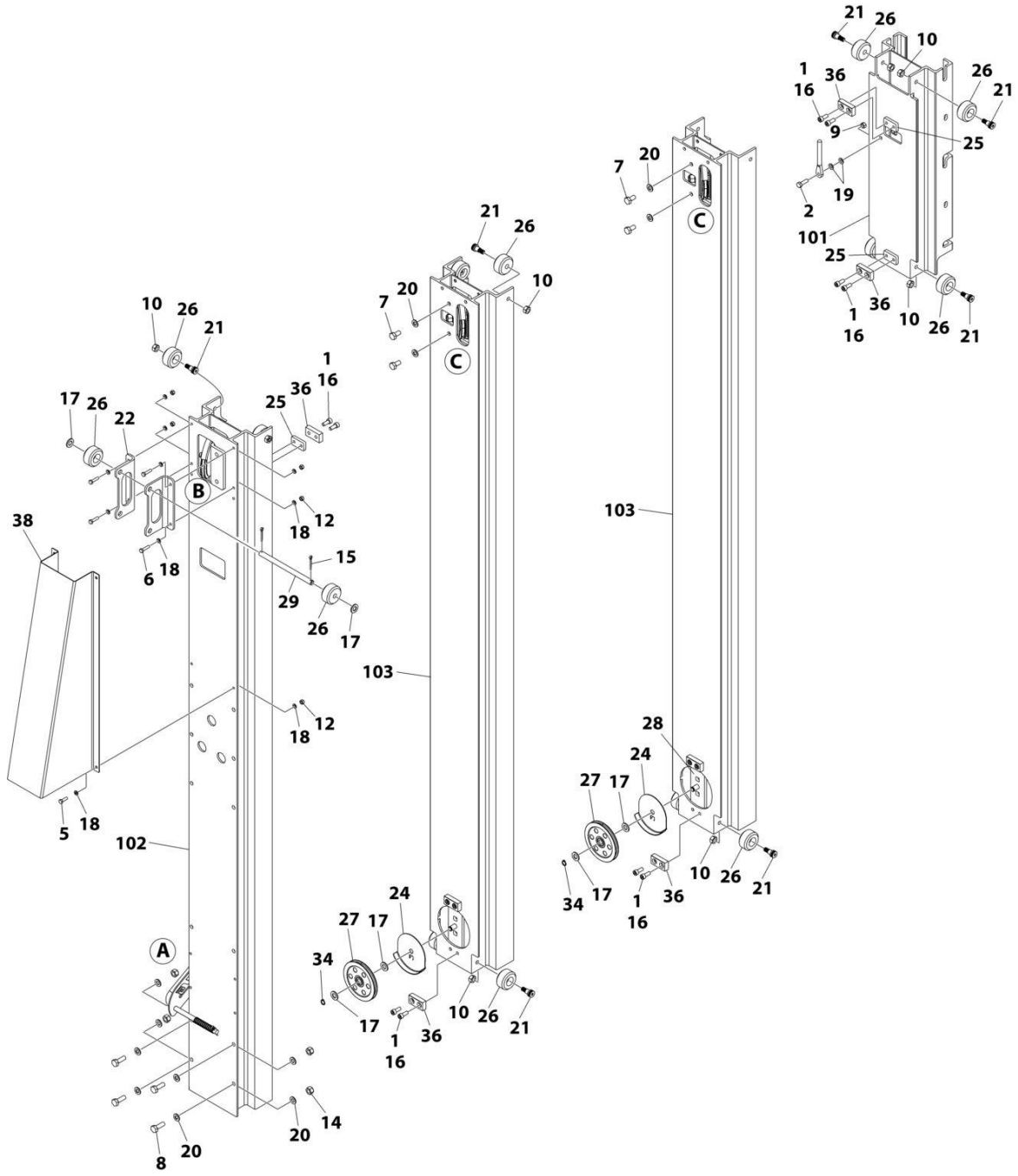

ART_1001233340_1OF2

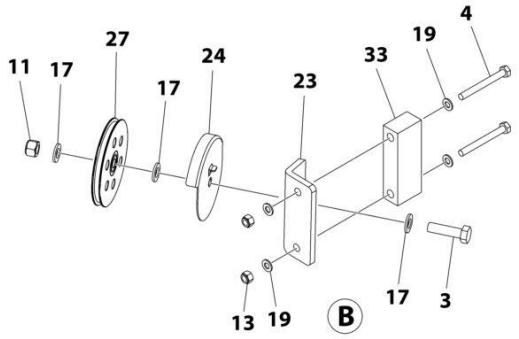

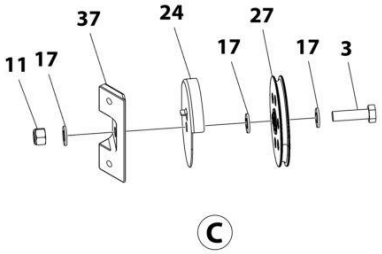

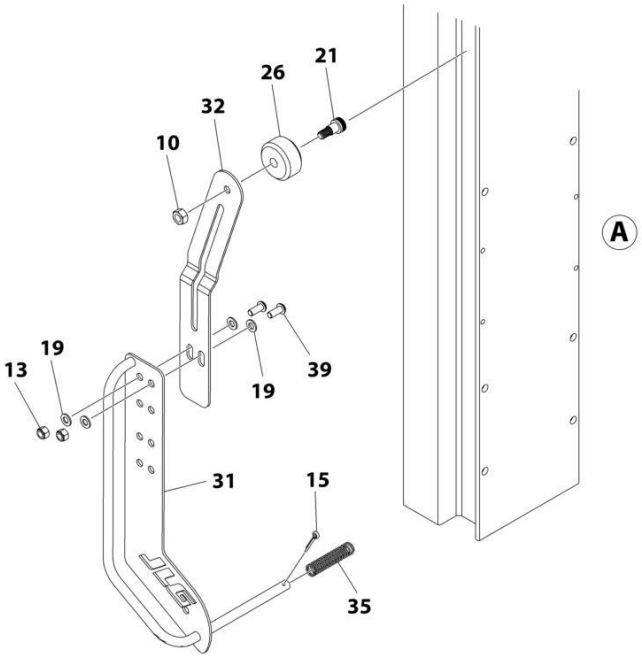

ART_1001233340_2OF2

FIGURE 3-4. MAST ASSEMBLY (18MLC)

ITEM	PART NUMBER	QTY	DESCRIPTION	REV
	1001233340	Ref	MAST ASSEMBLY	C
1	0100011	AR	Compound, Locking	
2	0681508	1	Bolt 5/16 x 1	
3	0761217	3	Bolt M12 x 45	
4	0700823	2	Bolt M8 x 75	
5	0760610	4	Bolt M6 x 20	
6	0760612	4	Bolt M6 x 25	
7	0761010	4	Bolt M10 x 20	
8	0761014	4	Bolt M10 x 30	
9	3271505	1	Nut 5/16	
10	3291007	13	Nut M10	
11	3291205	3	Nut M12	
12	3290605	8	Nut M6	
13	3290805	4	Nut M8	
14	3291005	4	Nut M10	
15	3450404	3	Pin, Cotter	
16	4031908	24	Capscrew M8 x 20	
17	4812100	15	Washer M12	
18	4811700	16	Washer M6	
19	4811900	10	Washer M8	
20	4812000	12	Washer M10	
21	1001237399	13	Screw M12	
22	1001229669	2	Mount, Upper Roller	
23	1001229670	1	Mount, Base Pulley	
24	1001229671	5	Cover, Pulley	
25	1001229672	8	Plate	
26	1001229675	15	Roller	
27	1001229676	5	Pulley	
28	1001229678	2	Mount, Lower Pulley	
29	1001229687	1	Tube	
30	1001230172	1	Cable (Not Shown)	
31	1001230769	1	Bracket	
32	1001230774	1	Bracket	
33	1001231382	1	Block	
34	1001237386	2	Ring, Retaining	
35	1001232217	1	Spring	
36	1001232938	12	Stop	
37	1001232939	2	Mount, Upper Pulley	
38	1001233381	1	Plate	
39	1001164726	2	Screw M8 x 20	
	1001233466	Ref	MAST KIT	
101	1001232196	1	Carriage, Lift	
102	1001232340	1	Base, Mast	
103	1001232341	2	Mid, Mast	

FIGURE 3-5. MAST ASSEMBLY (20ML)

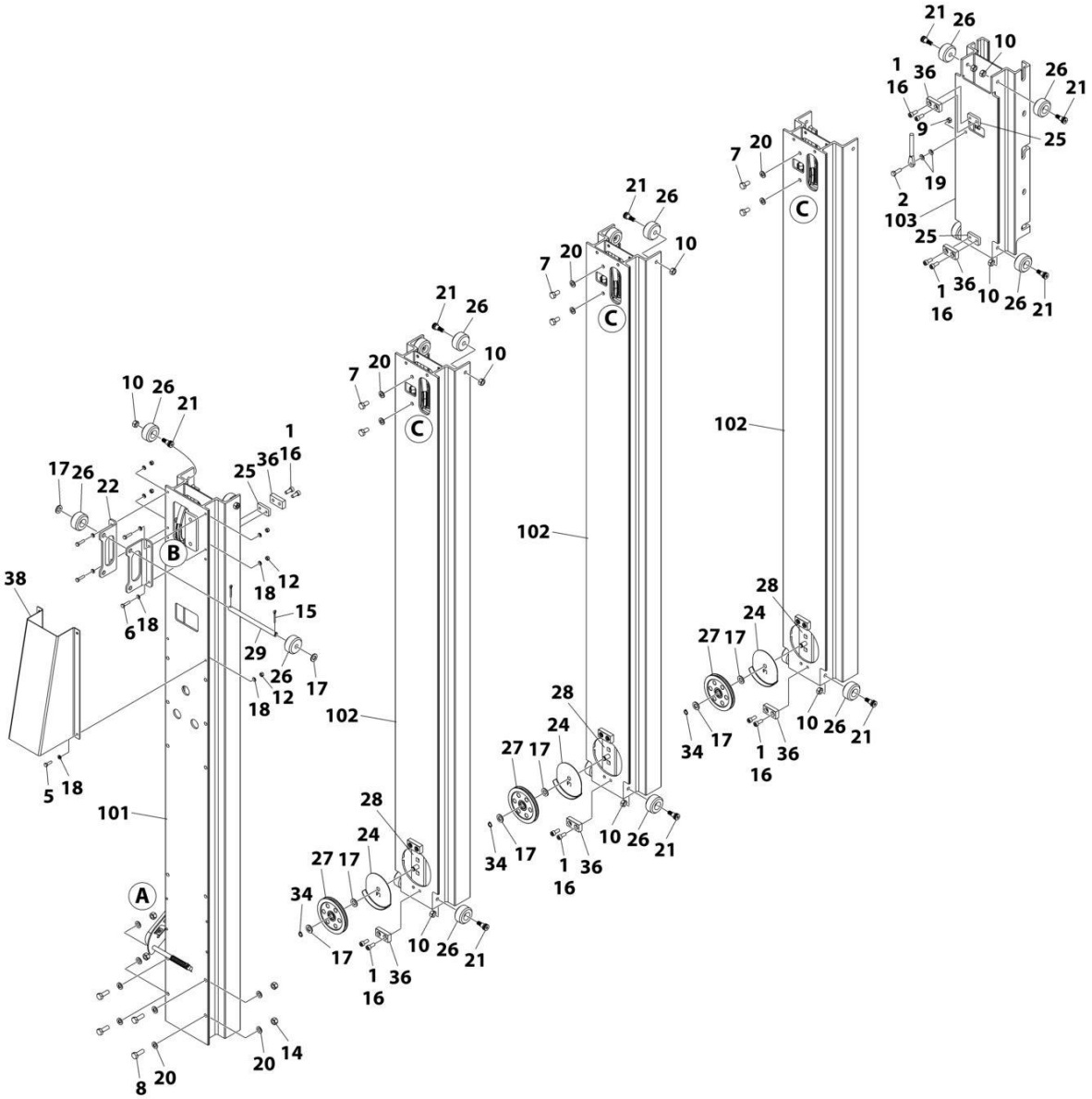

ART_1001233337_1OF2

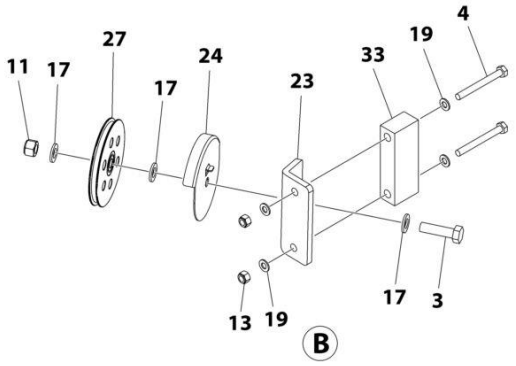

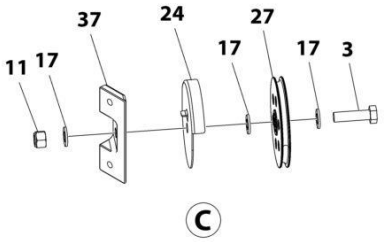

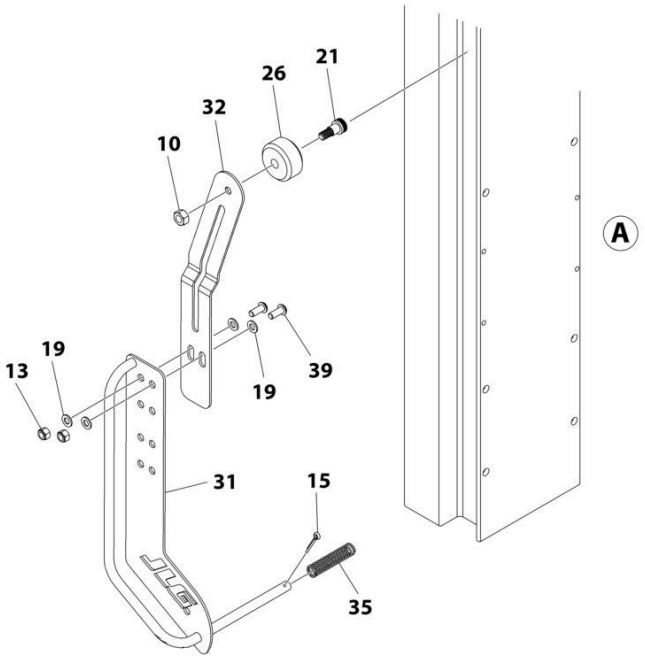

ART_1001233337_2OF2

FIGURE 3-5. MAST ASSEMBLY (20ML)

ITEM	PART NUMBER	QTY	DESCRIPTION	REV
	1001233337	Ref	MAST ASSEMBLY	B
1	0100011	AR	Compound, Locking	
2	0681508	1	Bolt 5/16 x 1	
3	0761217	4	Bolt M12 x 45	
4	0700823	2	Bolt M8 x 75	
5	0760610	4	Bolt M6 x 20	
6	0760612	4	Bolt M6 x 25	
7	0761010	6	Bolt M10 x 20	
8	0761014	4	Bolt M10 x 30	
9	3271505	1	Nut 5/16	
10	3291007	17	Nut M10	
11	3291205	4	Nut M12	
12	3290605	8	Nut M6	
13	3290805	4	Nut M8	
14	3291005	4	Nut M10	
15	3450404	3	Pin, Cotter	
16	4031908	32	Capscrew M8 x 20	
17	4812100	20	Washer M12	
18	4811700	16	Washer M6	
19	4811900	10	Washer M8	
20	4812000	14	Washer M10	
21	1001237399	17	Screw M12	
22	1001229669	2	Mount, Upper Roller	
23	1001229670	1	Mount, Base Pulley	
24	1001229671	7	Cover, Pulley	
25	1001229672	10	Plate	
26	1001229675	19	Roller	
27	1001229676	7	Pulley	
28	1001229678	3	Mount, Lower Pulley	
29	1001229687	1	Tube	
30	1001230169	1	Cable (Not Shown)	
31	1001230769	1	Bracket	
32	1001230774	1	Bracket	
33	1001231382	1	Block	
34	1001237386	3	Ring, Retaining	
35	1001232217	1	Spring	
36	1001232938	16	Stop	
37	1001232939	3	Mount, Upper Pulley	
38	1001233240	1	Cover	
39	1001164726	2	Screw M8 x 20	
	1001233463	Ref	MAST KIT	
101	1001232193	1	Base, Mast	
102	1001232194	3	Mid, Mast	
103	1001232196	1	Carriage, Lift	

FIGURE 3-6. MAST ASSEMBLY (24MLC)

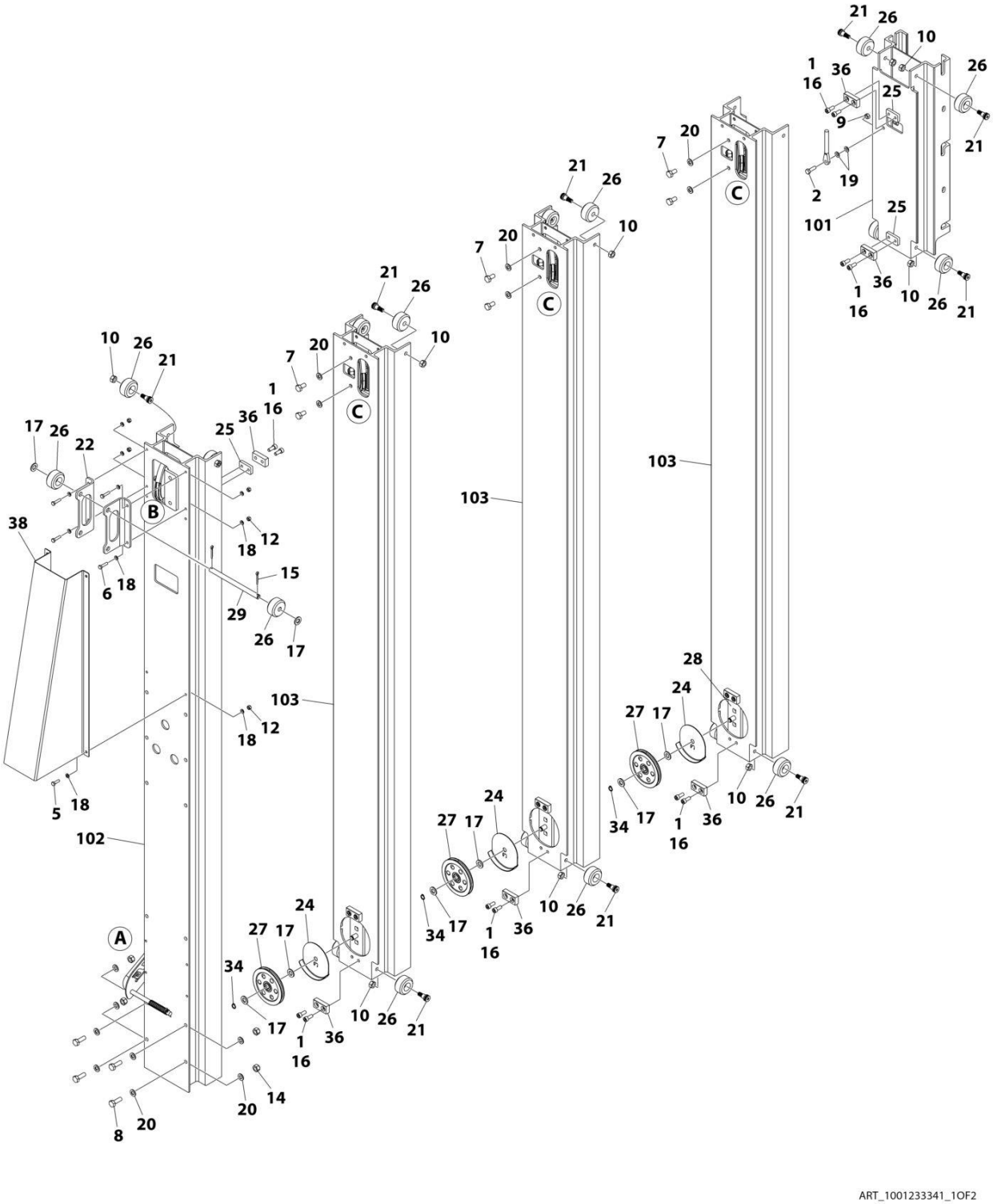

ART_1001233341_1OF2

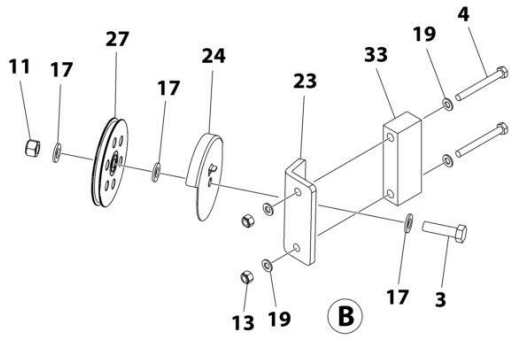

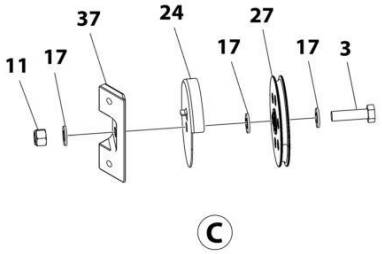

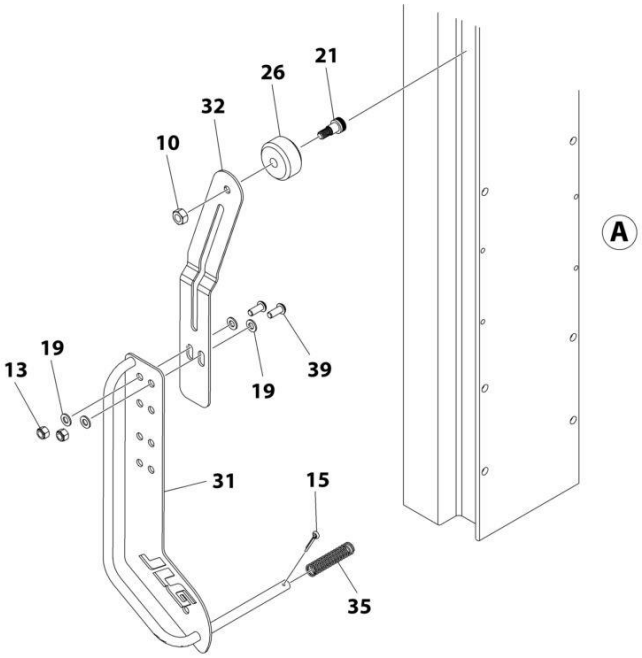

ART_1001233341_2OF2

FIGURE 3-6. MAST ASSEMBLY (24MLC)

ITEM	PART NUMBER	QTY	DESCRIPTION	REV
	1001233341	Ref	MAST ASSEMBLY	B
1	0100011	AR	Compound, Locking	
2	0681508	1	Bolt 5/16 x 1	
3	0761217	4	Bolt M12 x 45	
4	0700823	2	Bolt M8 x 75	
5	0760610	4	Bolt M6 x 20	
6	0760612	4	Bolt M6 x 25	
7	0761010	6	Bolt M10 x 20	
8	0761014	4	Bolt M10 x 30	
9	3271505	1	Nut 5/16	
10	3291007	17	Nut M10	
11	3291205	4	Nut M12	
12	3290605	8	Nut M6	
13	3290805	4	Nut M8	
14	3291005	4	Nut M10	
15	3450404	3	Pin, Cotter	
16	4031908	32	Capscrew M8 x 20	
17	4812100	20	Washer M12	
18	4811700	16	Washer M6	
19	4811900	10	Washer M8	
20	4812000	14	Washer M10	
21	1001237399	17	Screw M12	
22	1001229669	2	Mount, Upper Roller	
23	1001229670	1	Mount, Base Pulley	
24	1001229671	7	Cover, Pulley	
25	1001229672	10	Plate	
26	1001229675	19	Roller	
27	1001229676	7	Pulley	
28	1001229678	3	Mount, Lower Pulley	
29	1001229687	1	Tube	
30	1001230173	1	Cable (Not Shown)	
31	1001230769	1	Bracket	
32	1001230774	1	Bracket	
33	1001231382	1	Block	
34	1001237386	3	Ring, Retaining	
35	1001232217	1	Spring	
36	1001232938	16	Stop	
37	1001232939	3	Mount, Upper Pulley	
38	1001233381	1	Plate	
39	1001164726	2	Screw M8 x 20	
	1001233467	Ref	MAST KIT	
101	1001232196	1	Carriage, Lift	
102	1001232340	1	Base, Mast	
103	1001232341	3	Mid, Mast	

FIGURE 3-7. MAST ASSEMBLY (25ML)

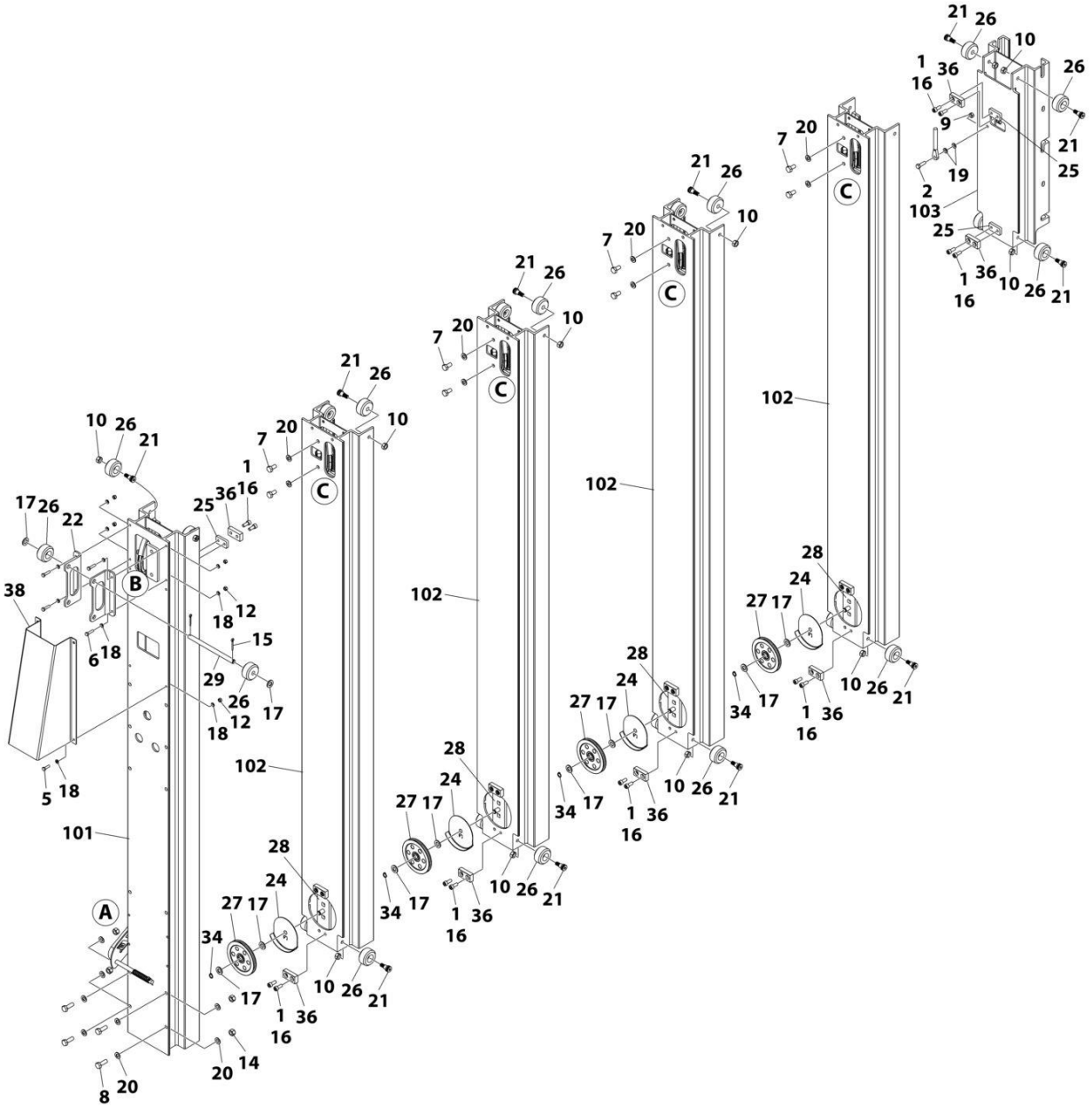

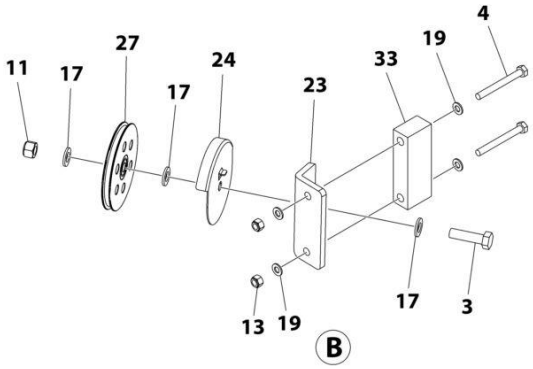

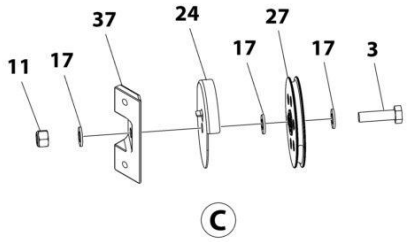

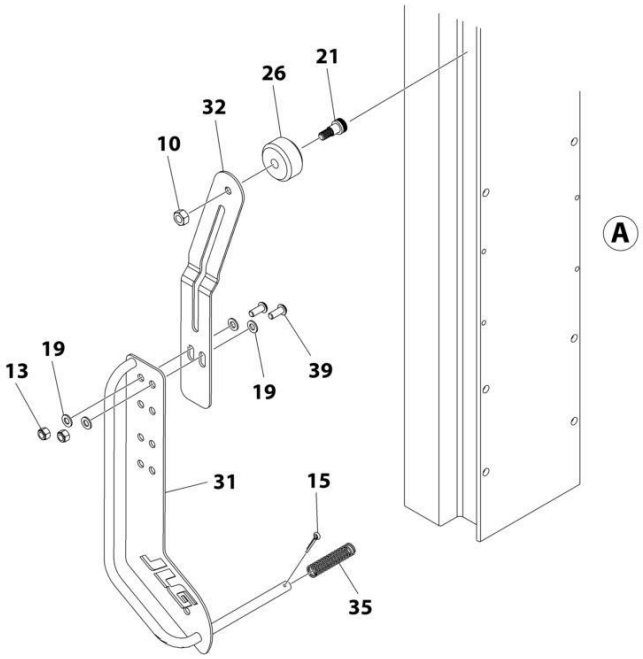

ART_1001233338_2OF2

FIGURE 3-7. MAST ASSEMBLY (25ML)

ITEM	PART NUMBER	QTY	DESCRIPTION	REV
	1001233338	Ref	MAST ASSEMBLY	B
1	0100011	AR	Compound, Locking	
2	0681508	1	Bolt 5/16 x 1	
3	0761217	5	Bolt M12 x 45	
4	0700823	2	Bolt M8 x 75	
5	0760610	4	Bolt M6 x 20	
6	0760612	4	Bolt M6 x 25	
7	0761010	8	Bolt M10 x 20	
8	0761014	4	Bolt M10 x 30	
9	3271505	1	Nut 5/16	
10	3291007	21	Nut M10	
11	3291205	5	Nut M12	
12	3290605	8	Nut M6	
13	3290805	4	Nut M8	
14	3291005	4	Nut M10	
15	3450404	3	Pin, Cotter	
16	4031908	40	Capscrew M8 x 20	
17	4812100	25	Washer M12	
18	4811700	16	Washer M6	
19	4811900	10	Washer M8	
20	4812000	16	Washer M10	
21	1001237399	21	Screw M12	
22	1001229669	2	Mount, Upper Roller	
23	1001229670	1	Mount, Base Pulley	
24	1001229671	9	Cover, Pulley	
25	1001229672	12	Plate	
26	1001229675	23	Roller	
27	1001229676	9	Pulley	
28	1001229678	4	Mount, Lower Pulley	
29	1001229687	1	Tube	
30	1001230170	1	Cable (Not Shown)	
31	1001230769	1	Bracket	
32	1001230774	1	Bracket	
33	1001231382	1	Block	
34	1001237386	4	Ring, Retaining	
35	1001232217	1	Spring	
36	1001232938	20	Stop	
37	1001232939	4	Mount, Upper Pulley	
38	1001233240	1	Plate	
39	1001164726	2	Screw M8 x 20	
	1001233464	Ref	MAST KIT	
101	1001232193	1	Base, Mast	
102	1001232194	4	Mid, Mast	
103	1001232196	1	Carriage, Lift	

FIGURE 3-8. MANUAL STORAGE TUBE INSTALLATION

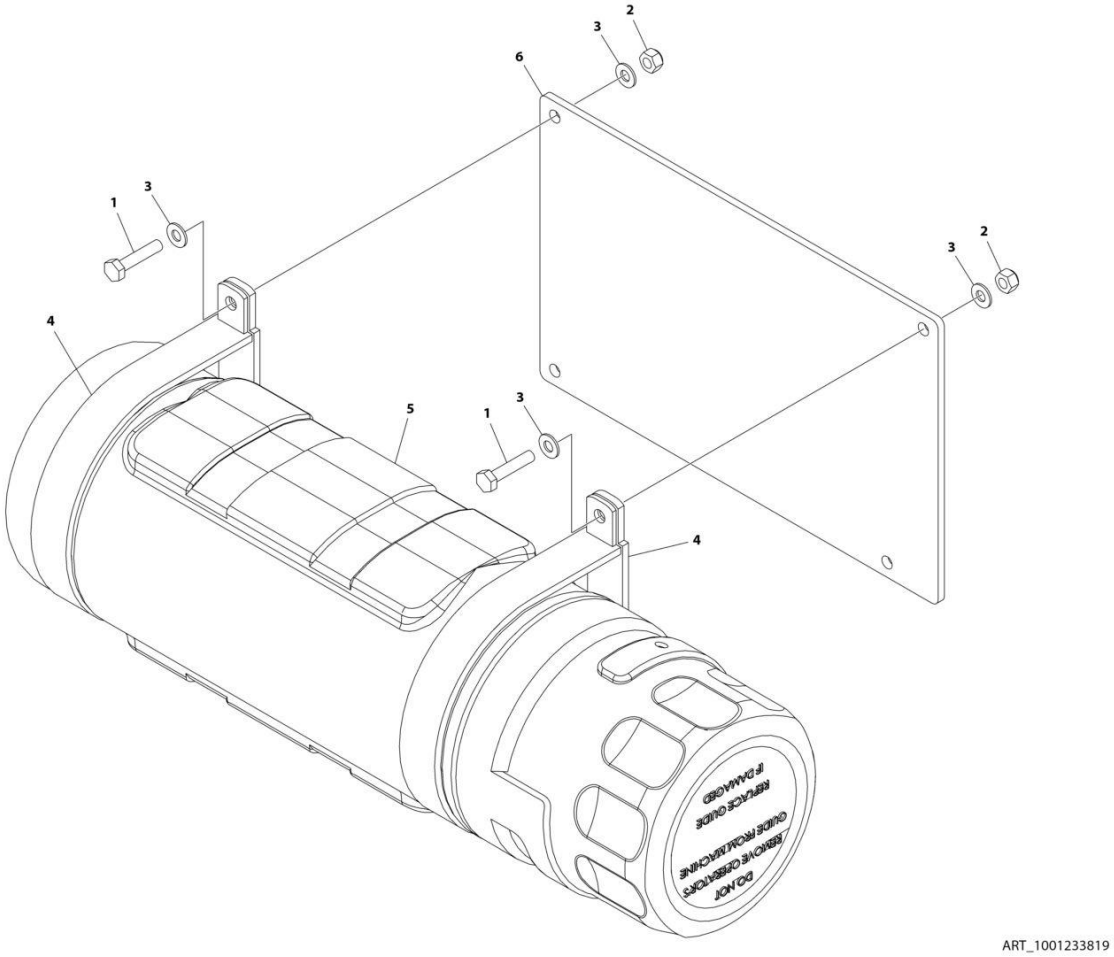

FIGURE 3-8. MANUAL STORAGE TUBE INSTALLATION

ITEM	PART NUMBER	QTY	DESCRIPTION	REV
	1001233819	Ref	MANUAL STORAGE TUBE INSTALLATION	B
1	0760410	4	Bolt M4 x 20	
2	3290405	4	Nut M4	
3	4811400	8	Washer M4	
4	1001233667	2	Clamp	
5	1001233668	1	Tube	
6	1001234246	1	Mount	

SECTION 4 - FORK ACCESSORIES

FIGURE 4-1. FORK INSTALLATION - STANDARD

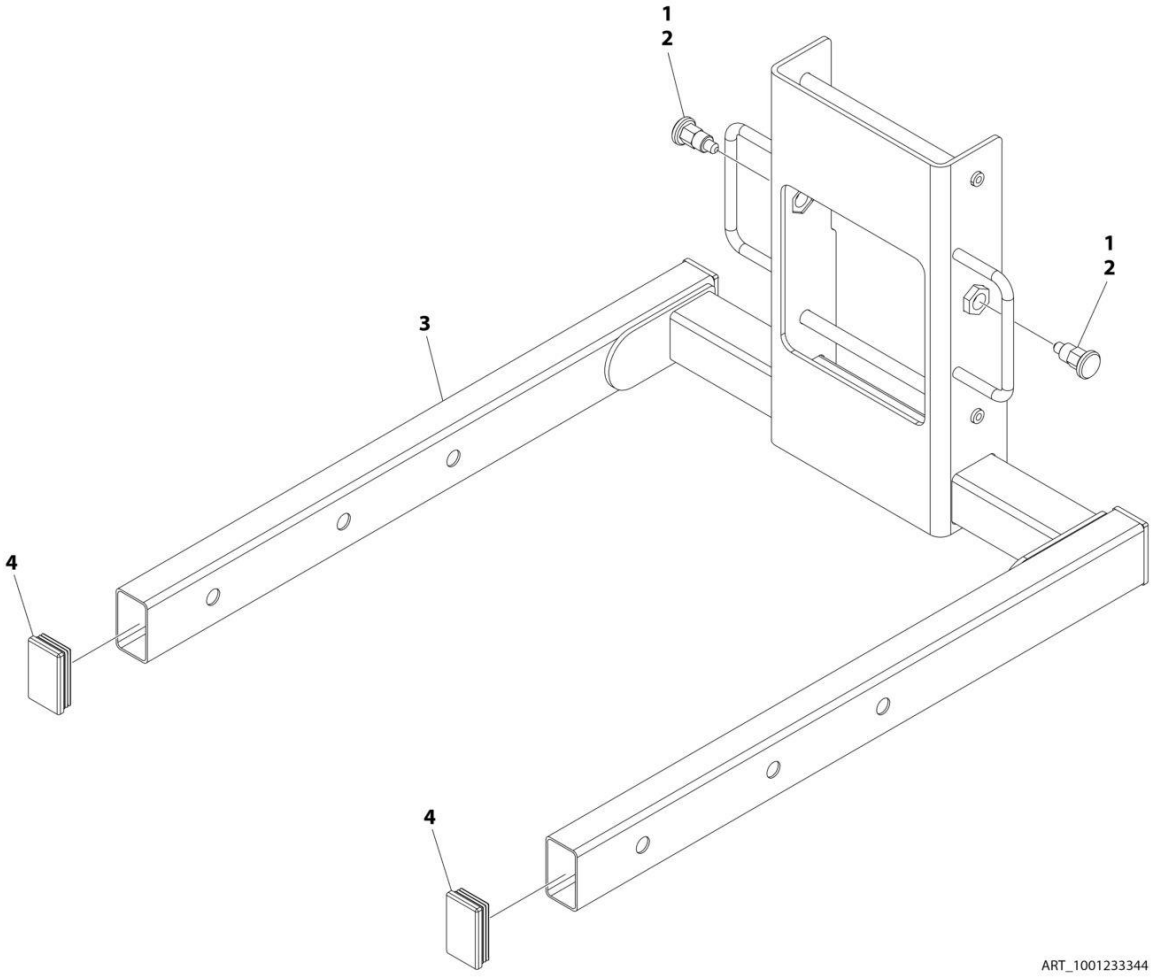

FIGURE 4-1. FORK INSTALLATION - STANDARD

ITEM	PART NUMBER	QTY	DESCRIPTION	REV
	1001233344	Ref	FORK INSTALLATION - STANDARD	B
1	0100011	AR	Compound, Locking	
2	3422744	2	Pin	
3	1001233345	1	Fork	
4	1001237253	2	Plug	

SECTION 5 - DECALS

SECTION 6 - RECOMMENDED SERVICE PARTS STOCK

PART NUMBER INDEX

SECTION 6 - RECOMMENDED SERVICE PARTS STOCK

0100011....27, 29, 31, 34, 38, 42, 46, 53
0681508....27, 29, 31, 34, 38, 42, 46
0700614.....15
0700819.....21, 23
0700821.....27
0700823....27, 29, 31, 34, 38, 42, 46
0701018.....15
0701024.....15
0701214.....17
0711228.....11, 13
0760405.....21, 23
0760410.....49
0760610....27, 29, 31, 34, 38, 42, 46
0760612....27, 29, 31, 34, 38, 42, 46
0761010....27, 29, 31, 34, 38, 42, 46
0761014....11, 13, 21, 23, 27, 29, 31, 34, 38, 42, 46
0761015.....11, 13, 15, 17
0761217....27, 29, 31, 34, 38, 42, 46
1001100945.....21, 23
1001149581.....11, 13
1001164726....27, 29, 31, 34, 38, 42, 46
1001229669....27, 29, 31, 34, 38, 42, 46
1001229670....27, 29, 31, 34, 38, 42, 46
1001229671....27, 29, 31, 34, 38, 42, 46
1001229672....27, 29, 31, 34, 38, 42, 46
1001229675....27, 29, 31, 34, 38, 42, 46
1001229676....27, 29, 31, 34, 38, 42, 46
1001229678... 27, 29, 31, 34, 38, 42, 46
1001229687... 21, 23, 27, 29, 31, 34, 38, 42, 46
1001230072..... 11, 13
1001230082..... 13
1001230089..... 15
1001230094..... 15
1001230095..... 15
1001230098..... 21, 23
1001230109..... 17
1001230116..... 17
1001230117..... 11, 13
1001230118..... 11, 13
1001230119..... 11, 13
1001230167..... 27
1001230168..... 31
1001230169..... 38
1001230170..... 46
1001230171..... 29
1001230172..... 34
1001230173..... 42
1001230208..... 11
1001230210..... 13
1001230214..... 15
1001230604..... 15
1001230769... 27, 29, 31, 34, 38, 42, 46
1001230774... 27, 29, 31, 34, 38, 42, 46
1001230919..... 11
1001231232..... 15
1001231382... 27, 29, 31, 34, 38, 42, 46
1001232043..... 11, 13
1001232193... 27, 31, 38, 46
1001232194... 27, 31, 38, 46
1001232196... 27, 29, 31, 34, 38, 42, 46
1001232217... 27, 29, 31, 34, 38, 42, 46
1001232284..... 11, 13
1001232340.... 29, 34, 42
1001232341.... 29, 34, 42
1001232858..... 17
1001232859..... 17
1001232860..... 17
1001232864..... 17
1001232938... 27, 29, 31, 34, 38, 42, 46
1001232939... 27, 29, 31, 34, 38, 42, 46
1001233240... 27, 31, 38, 46
1001233245..... 21, 23
1001233255..... 15
1001233335..... 27
1001233336..... 31
1001233337..... 38
1001233338..... 46
1001233339..... 29
1001233340..... 34
1001233341..... 42
1001233343..... 23
1001233344..... 53
1001233345..... 53
1001233381.... 29, 34, 42
1001233461..... 27
1001233462..... 31
1001233463..... 38
1001233464..... 46
1001233465..... 29
1001233466..... 34
1001233467..... 42
1001233486..... 21
1001233489..... 21, 23
1001233667..... 49
1001233668..... 49
1001233819..... 49
1001233977..... 11, 13
1001234123..... 21
1001234246..... 49
1001234392..... 15
1001235381..... 23
1001237251.....27, 29
1001237252.....27, 29
1001237253.....53
1001237386....27, 29, 31, 34, 38, 42, 46
1001237399....27, 29, 31, 34, 38, 42, 46
1380136.....21, 23
2560088.....21, 23
3271505....27, 29, 31, 34, 38, 42, 46
3290405.....21, 23, 49
3290605....15, 27, 29, 31, 34, 38, 42, 46
3290805....21, 23, 27, 29, 31, 34, 38, 42, 46
3291005....11, 13, 15, 21, 23, 27, 29, 31, 34, 38, 42, 46
3291007....27, 29, 31, 34, 38, 42, 46
3291201.....17
3291205....11, 13, 27, 29, 31, 34, 38, 42, 46
3422744.....53
3450404....17, 21, 23, 27, 29, 31, 34, 38, 42, 46
4031908....27, 29, 31, 34, 38, 42, 46
4712000.....17
4811400.....21, 23, 49
4811700....27, 29, 31, 34, 38, 42, 46
4811900....21, 23, 27, 29, 31, 34, 38, 42, 46
4812000....11, 13, 15, 17, 21, 23, 27, 29, 31, 34, 38, 42, 46
4812100....11, 13, 17, 27, 29, 31, 34, 38, 42, 46

31211318

An Oshkosh Corporation Company

Corporate Office
JLG Industries, Inc.
1 JLG Drive
McConnellsburg, PA 17233-9533 USA
(717) 485-5161 (Corporate)
(877) 554-5438 (Customer Support)
(717) 485-6417

Visit our website for JLG Worldwide Locations.
www.jlg.com