Lull®

Illustrated Parts Manual

Model
844

10709910

Febuary 2000

ANSI

JLG®

An Oshkosh Corporation Company

Copyright © 1998,2000 Lull International, Inc. All rights reserved.

No part of this publication may be reproduced, stored in a retrieval system, or transmitted in any form or by any means (electronic, mechanical, recording, photocopy, or otherwise) without prior written permission from the copyright holder.

Publication Number 10709910
Compiled Edition 02/00

MODEL 844

MISCELLANEOUS FILTERS

PART NUMBERS	318 Chrysler	276 John Deere	159 Detroit (3-53)	212 Detroit (4-53)	287 Deutz	283 Waukesha	FILTERS	REMARKS
P12089	X						Oil Filter	
P19513						X	Oil Filter	
P19848					X		Oil Filter	
P22640			X				Oil Filter	Spin-On
P19535			X				Oil Filter	Element
P19287				X			Oil Filter	
P22635		X					Oil Filter	
P15267	X						Fuel Filter	
P17316						X	Fuel Filter	
P19856					X		Fuel Filter	
P22641			X				Fuel Filter-Primary	Spin-On
P22642			X				Fuel Filter-Secondary	Spin-On
P19288			X				Fuel Filter-Primary	Element
P19289			X	X			Fuel Filter-Secondary	Element
P22636		X					Fuel Filter	
P17276	X					X	Air Filter	
P19476			X	X	X		Air Filter	
P12179		X					Air Filter	For Machine W/Single Filter Air Cleaner
P21498		X					Air Filter-Primary	For Machine W/Dual Filter Air Cleaner
P21499		X					Air Filter-Safety	For Machine W/Dual Filter Air Cleaner
P19133	X	X	X	X	X	X	Transmission	Spin-On
P17815	X					X	Transmission	Element
P19801	X	X	X	X	X	X	Hydraulic Oil	Spin-On
P13586	X		X	X		X	Hydraulic Oil	Element
P24315		X	X		X		Hydraulic Oil	Element, Tank Mounted (S/N 991 THRU)

16816-A

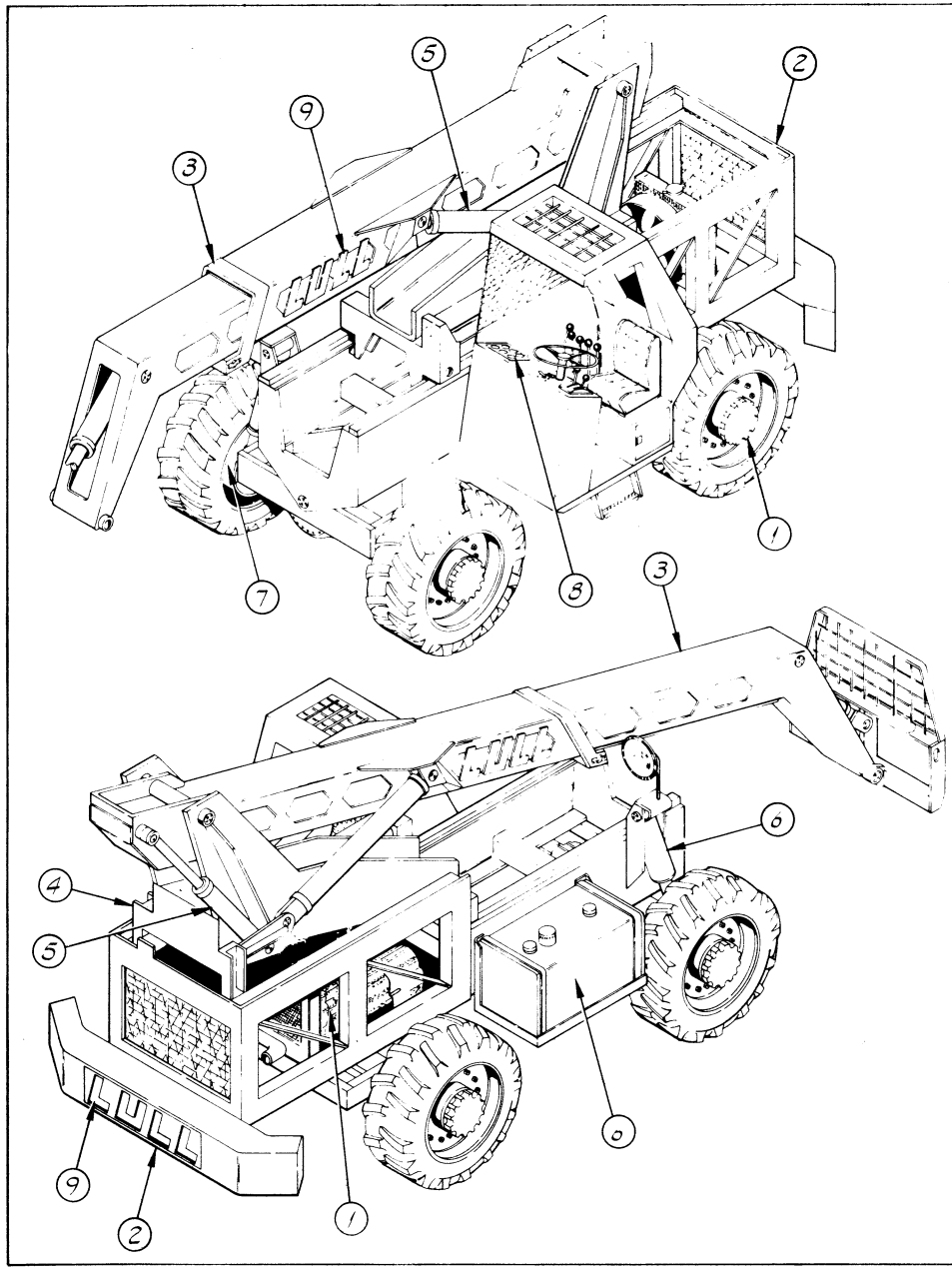

ITEM	ASSEMBLY NUMBERS CHRYSLER	WAUKESHA		DESCRIPTION
1	16801	16802		DRIVE TRAIN ASSEMBLY
	16818	16819		THROTTLE ASSEMBLY
	16822	16823		RADIATOR & TRANS. COOLER ASS'Y
	16826	16827		AIR CLEANER ASSEMBLY
	16830	16831		EXHAUST ASSEMBLY
	16833	16833		TRANSMISSION DISCONNECT ASS'Y
2	16805	16805		MAIN FRAME ASSEMBLY
	16834	16834		OPERATORS PLATFORM ASSEMBLY
	16835	16835		INSTRUMENT PANEL ASSEMBLY
3	16806	16806		TELESCOPIC BOOM ASSEMBLY
4	16807	16807		TRANSFER CARRIAGE ASSEMBLY
5	16808	16808		UPPER HYDRAULIC ASSEMBLY
	16837	16837		HOIST CYLINDER ASSEMBLY
	16838	16838		BOOM EXTENSION CYLINDER ASS'Y
	16839	16839		FRONT CARRIAGE TILT CYL. ASS'Y
	16840	16840		CARRIAGE TILT CYLINDER ASS'Y
6	16809	16809		LOWER HYDRAULIC ASSEMBLY
	16841	16841		HYDRAULIC STEERING ASSEMBLY
	16842	16842		JOYSTICK CONTROL ASSEMBLY
	16843	16843		FOUR SPOOL CONTROL HANDLE ASS'Y
	16844	16844		FRAME TILT CYLINDER ASSEMBLY
	16845	16845		TRANSFER CYLINDER ASSEMBLY
7	16810	16310		BRAKE ASSEMBLY
8	16811	16812		WIRING HARNESS ASSEMBLY
	16846	16847		WIRING DIAGRAM
9	16815	16815		DECAL LOCATION ASSEMBLY
10	16816	16816		LUBRICATION SCHEDULE
APPENDIX	16850	16850		50" STANDARD CARRIAGE ASSEMBLY
				MACHINE OPTIONS
				AXLE BREAKDOWN
				TRANSMISSION BREAKDOWN
				ENGINE BREAKDOWN

LULL

ST. PAUL, MINNESOTA 55121

J. DAUB | CHRYSLER & WAUKESHA

FINAL ASSEMBLY MODEL 844

SCALE D

DRAWING NO. 16800

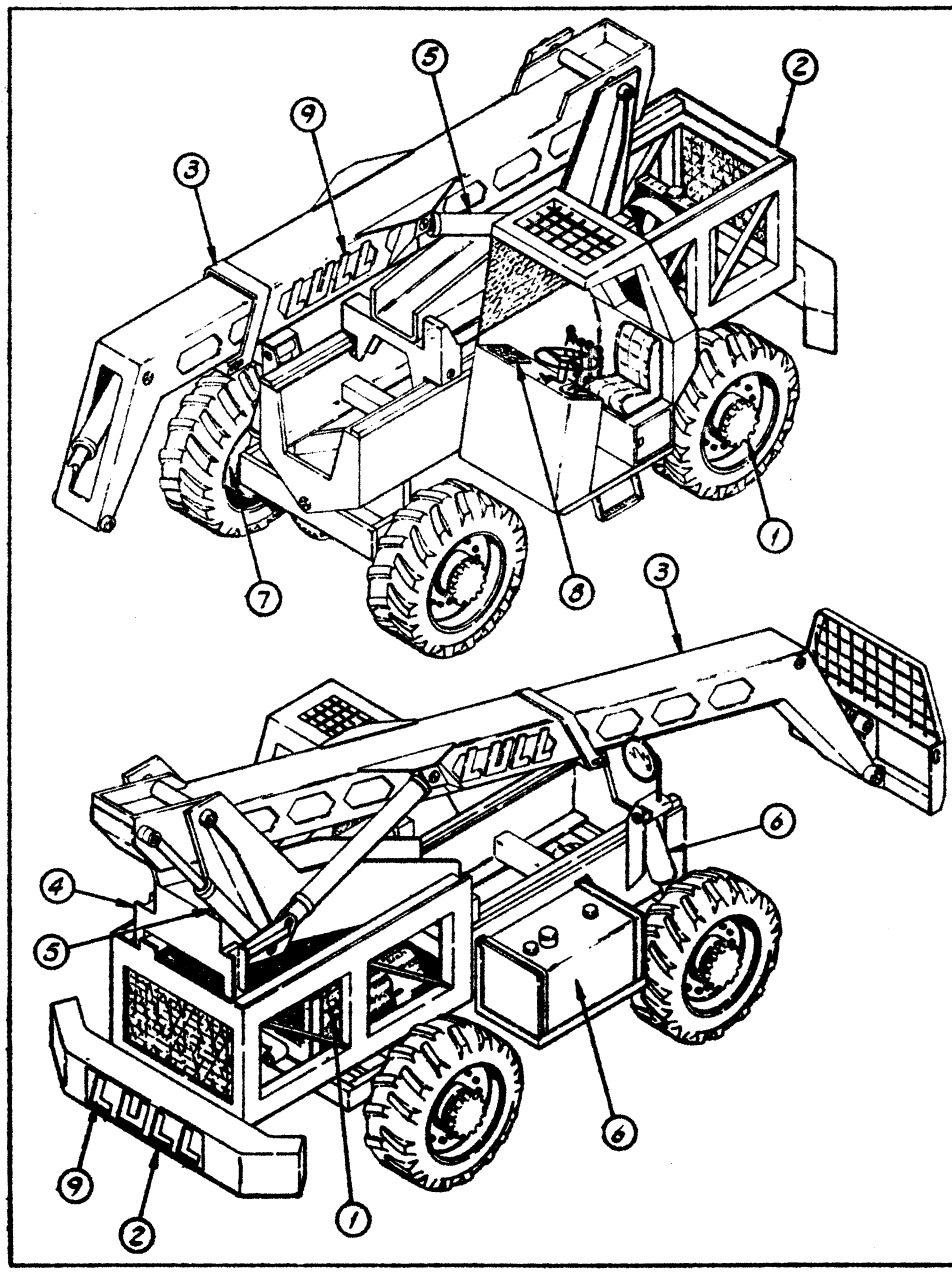

ITEM	ASSEMBLY NUMBERS DEERE	DEUTZ	DETROIT	DESCRIPTION
1	16802	16803	16804	DRIVE TRAIN ASSEMBLY
	16819	16820	16821	THROTTLE ASSEMBLY
	16823	—	16825	RADIATOR & TRANS. COOLER ASS'Y
	—	16824	—	AIR SHROUD & TRANS. COOLER ASS'Y
	16827	16828	16829	AIR CLEANER ASSEMBLY
	16831	—	16832	EXHAUST ASSEMBLY
	16833	16833	16833	TRANSMISSION DISCONNECT ASS'Y
2	16805	16805	16805	MAIN FRAME ASSEMBLY
	16834	16834	16834	OPERATORS PLATFORM ASSEMBLY
	16835	16835	16835	INSTRUMENT PANEL ASSEMBLY
3	16806	16806	16806	TELESCOPIC BOOM ASSEMBLY
4	16807	16807	16807	TRANSFER CARRIAGE ASSEMBLY
5	16808	16808	16808	UPPER HYDRAULIC ASSEMBLY
	16837	16837	16837	HOIST CYLINDER ASSEMBLY
	16838	16838	16838	BOOM EXTENSION CYLINDER ASS'Y
	16839	16839	16839	FRONT CARRIAGE TILT CYL. ASS'Y
	16840	16840	16840	REAR CARRIAGE TILT CYLINDER ASS'Y
6	16809	16809	16809	LOWER HYDRAULIC ASSEMBLY
	16841	16841	16841	HYDRAULIC STEERING ASSEMBLY
	16842	16842	16842	JOYSTICK CONTROL ASSEMBLY
	16843	16843	16843	FOUR SPOOL CONTROL HANDLE ASS'Y
	16844	16844	16844	FRAME TILT CYLINDER ASSEMBLY
	16845	16845	16845	TRANSFER CYLINDER ASSEMBLY
7	16810	16810	16810	BRAKE ASSEMBLY
8	16812	16813	16814	WIRING HARNESS ASSEMBLY
	16847	16848	16849	WIRING DIAGRAM
9	16815	16815	16815	DECAL LOCATION ASSEMBLY
10	16816	16816	16816	LUBRICATION SCHEDULE
APPENDIX				FORK CARRIAGE ASSEMBLY MACHINE OPTIONS AXLE BREAKDOWN TRANSMISSION BREAKDOWN
	16800-3	16800-4	16800-5	FINAL ASSEMBLY

LULL Engineering Co., Inc. ST. PAUL, MINNESOTA

DEERE, DEUTZ & DETROIT

FINAL ASSEMBLY MODEL 844

SCALE D

DRAWING NO. 16800-A

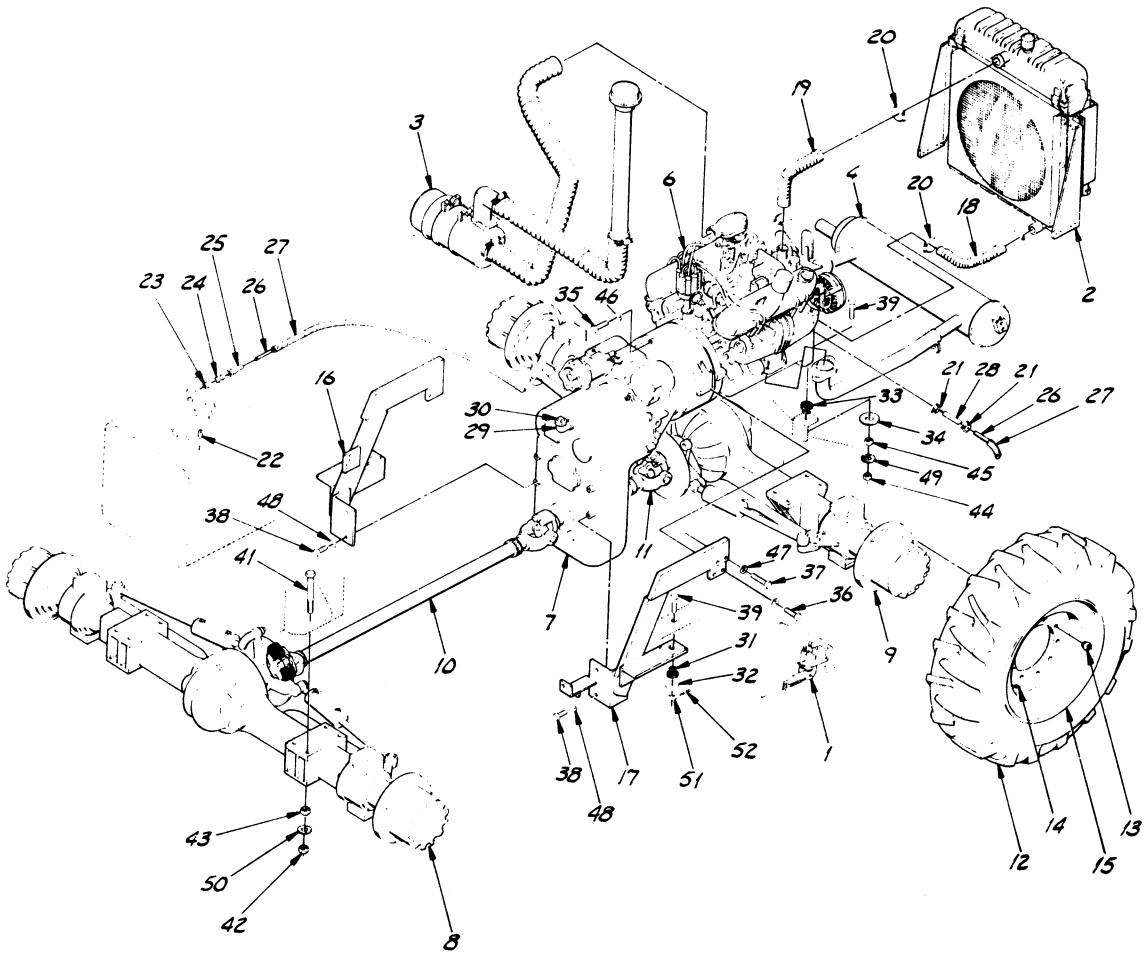

ITEM	PART NO.	DESCRIPTION	REQ.
44	P11450	JAM NUT, HX 5/8-11 NC	1
43	P14225	NUT, HX 3/4-16 NF	16
42	P17662	JAM NUT, HX 3/4-16 NF	16
41	P17653	BOLT, HX 3/4-16 NF×8	8
40	P17652	BOLT, HX 3/4-16 NF×3	8
39	P17304	BOLT, HX 5/8-11 NC×4 1/2	3
38	P17250	BOLT, HX 5/8-11 NC×1 1/2	4
37	P17667	BOLT, HX 1/2-13 NC×2	4
36	P17836	BOLT, HX 1/2-13 NC×1 1/2	4
35	P15126	BOLT, HX 3/8-16 NC×1 1/2	11
34	P20396	WASHER, ENGINE MT.	1
33	P18180	RUBBER MTG., ENGINE	1
32	P20395	WASHER, TRANS. MT.	2
31	P18181	RUBBER MTG., TRANS	2
30	P10730	PIPE PLUG	1
29	P10231	90° STREET ELBOW	1
28	P16547	RUBBER HOSE	A/R
27	P16725	ASBESTOS COVER	A/R
26	P14057	FUEL LINE, COPPER	A/R
25	P15311	FLARED NUT	1
24	P15409	CONNECTOR, MALE	1
23	P10691	REDUCER BUSHING	1
22	P10554	PLUG, FUEL TANK	1
21	P13613	HOSE CLAMP	2
20	P10601	HOSE CLAMP	4
19	P17682	HOSE, UPPER RAD.	1
18	P17681	HOSE, LOWER RAD.	1
17	15521C	TRANS. SUPP'T, L.H.	1
16	15520C	TRANS. SUPP'T, R.H.	1
15	12749C	WHEEL WELDMENT	4
14	P13673	VALVE STEM	4
13	P13894	WHEEL NUT	40
12	P11688	TIRE, 13.00-24, 8 PLY	4
11	P17902	DRIVE SHAFT, REAR	1
10	P17901	DRIVE SHAFT, FRONT	1
9	P18069	AXLE, REAR	1
8	P18068	AXLE, FRONT	1
7	P18812	TRANSMISSION, FUNK	1
6	P17576	ENGINE, 318 CHRYSLER	1
5	16833	TRANS. DISCONN. ASS'Y	1
4	16830	EXHAUST ASSEMBLY	1
3	16826	AIR CLEANER ASS'Y	1
2	16822	RADIATOR ASSEMBLY	1
1	16818	THROTTLE ASSEMBLY	1

52	COM'L	COTTER PIN 1/8×1	2
51	COM'L	NUT, CASTELATED 5/8-11	2
50	COM'L	STARWASHER, 3/4	16
49	COM'L	STARWASHER, 5/8	1
48	COM'L	LOCKWASHER, 5/8	4
47	COM'L	LOCKWASHER, 1/2	8
46	COM'L	LOCKWASHER, 3/8	11
45	P14223	NUT, HX 5/8-11 NC	1

LULL Engineering Co., Inc.
ST. PAUL, MINNESOTA 55121

DRAWN BY: J DAUB

S/N 101-442 & 626-661

DRAWING TITLE: DRIVE TRAIN ASSEMBLY MODEL 844

CHRYS.

SCALE: C

DRAWING NO. 16801

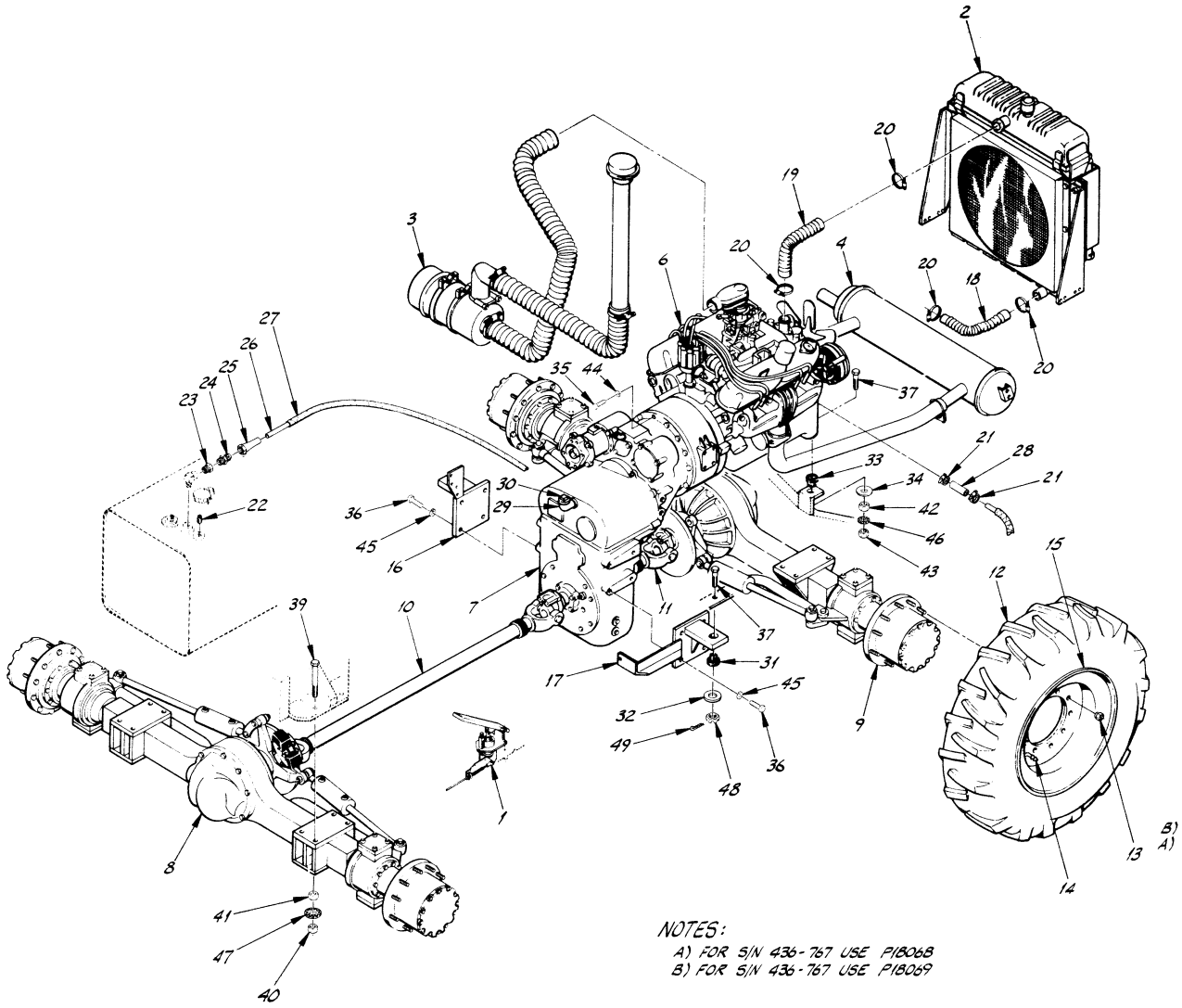

NOTES:

A) FOR S/N 436-767 USE P18068

B) FOR S/N 436-767 USE P18069

ITEM	PART No.	DESCRIPTION	REQ.
50	16833	TRANS DISCONNECT	REF
49	COM'L	COTTER PIN 1/8" × 1"	2
48	COM'L	CASTLE NUT, HX. 5/8"-18	2
47	COM'L	STARWASHER, 3/4"	16
46	COM'L	STARWASHER, 5/8"	1
45	COM'L	LOCKWASHER, 1/2"	8
44	COM'L	LOCKWASHER, 3/8"	11
43	P17665	NUT, HX 5/8"-18 NF	1
42	P16793	JAM NUT, HX 5/8"-18 NF	1
41	P14225	NUT, HX 3/4"-16 NF	16
40	P17662	JAM NUT, HX 3/4"-16 NF	16
39	P17653	BOLT, HX 3/4"-16 NF × 8"	8
38	P17652	BOLT, HX 3/4"-16 NF × 3"	8
37	P17304	BOLT, HX 5/8"-18 NF × 4 1/2"	3
36	P17830	BOLT, HX 3/4"-10 NC × 1 1/2"	8
35	P15126	BOLT, HX 3/8"-16 NC × 1 1/2"	11
34	P20396	WASHER, ENGINE MT.	1
33	P18180	RUBBER MTG., ENG	1
32	P20395	WASHER, TRANS. MT.	2
31	P18181	RUBBER MTG., TRANS	2
30	P10730	PIPE PLUG	1
29	P10231	90° STREET ELBOW	1
28	P16547	RUBBER HOSE	3"
27	P16725	LOOM, FUEL LINE	110"
26	P14057	FUEL LINE, COPPER	112"
25	P15311	FLARED NUT	1
24	P15409	MALE CONNECTOR	1
23	P10691	REDUCER BUSHING	1
22	P10554	PLUG, FUEL TANK	1
21	P13613	HOSE CLAMP	2
20	P10601	HOSE CLAMP	4
19	P17682	HOSE, UPPER RAD.	1
18	P17681	HOSE, LOWER RAD.	1
17	17116C	TRANS SUPP'T, L.H.	1
16	17115C	TRANS SUPP'T, R.H.	1
15	127490	WHEEL WELDMENT	4
14	P13673	VALVE STEM	4
13	P13894	WHEEL NUT	40
12	P11688	TIRE, 13:00-24, 8 PLY	4
11	P20972	DRIVE SHAFT, REAR	1
10	P20971	DRIVE SHAFT, FRONT	1
B) 9	P21736	AXLE, REAR	1
A) 8	P21735	AXLE, FRONT	1
7	P20834	TRANSMISSION	1
6	P17576	ENGINE, 318 CHRYS.	1
4	16830	EXHAUST ASSEMBLY	REF
3	16826	AIR CLEANER ASS'Y	REF
2	16822	RADIATOR ASSEMBLY	REF
1	16818	THROTTLE ASSEMBLY	REF

LULL

ST. PAUL, MINNESOTA 55121

DRAWN BY: J DAUB

S/N 430-025, 062 THRU

DRAWING TITLE: DRIVE TRAIN ASSEMBLY MODEL 844

CHRYS.

SCALE: D

DRAWING NO. 16801-1

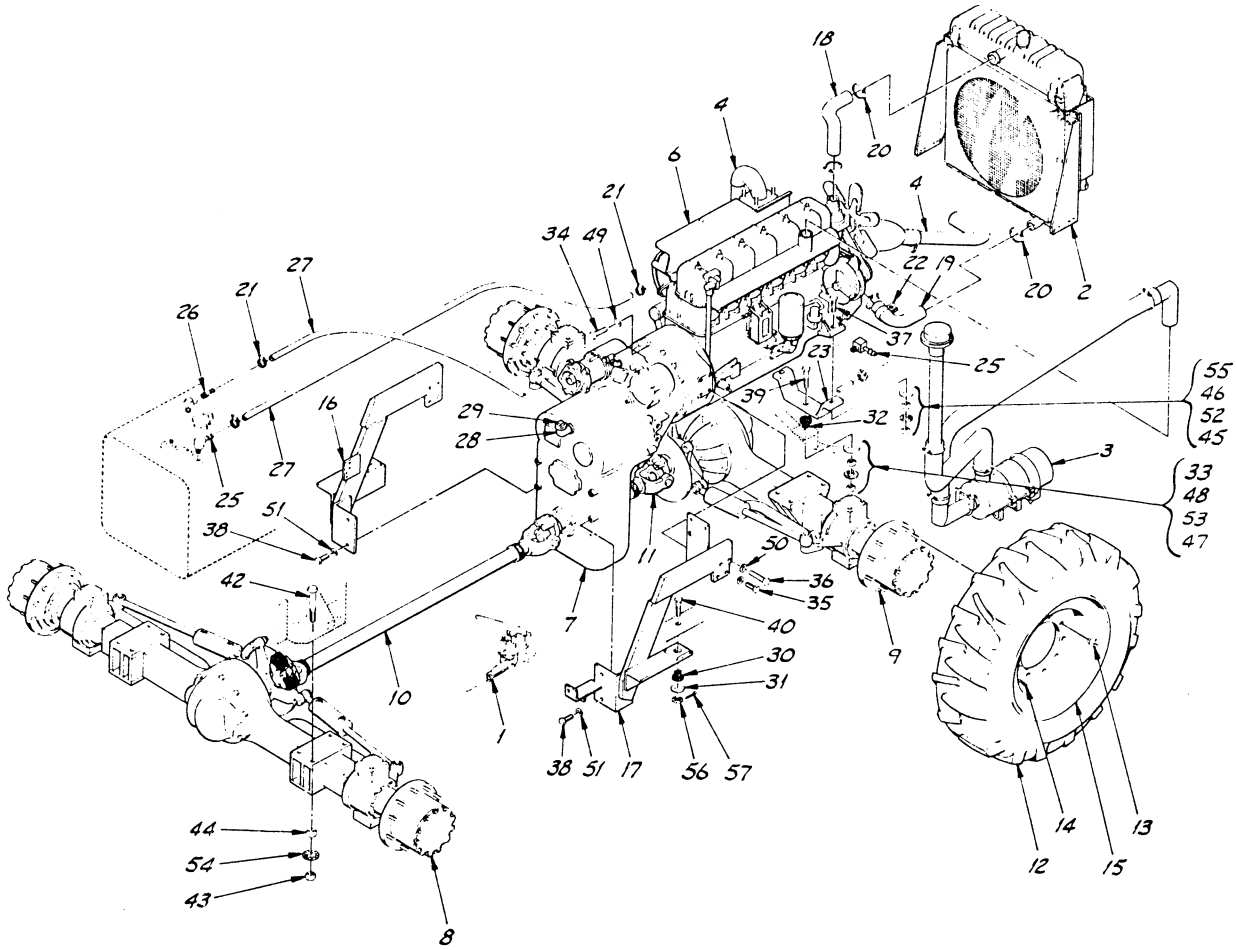

ITEM	PART NO.	DESCRIPTION	REQ.
44	P14225	NUT, HX 3/4-16 NF	16
43	P17662	JAM NUT, HX 3/4-16 NF	16
42	P17653	BOLT, HX 3/4-16 NF × 8	8
41	P17652	BOLT, HX 3/4-16 NF × 3	8
40	P17304	BOLT, HX 5/8-11 NC × 4 1/2	2
39	P17795	BOLT, HX 5/8-11 NC × 3 1/2	1
38	P17250	BOLT, HX 5/8-11 NC × 1 1/2	4
37	P18024	BOLT, HX 1/2-13 NC × 2 3/4	2
36	P17667	BOLT, HX 1/2-13 NC × 2	4
35	P17836	BOLT, HX 1/2-13 NC × 1 1/2	4
34	P15126	BOLT, HX 3/8-16 NC × 1 1/2	11
33	P20396	WASHER, ENGINE MT.	1
32	P18180	RUBBER MTG., ENGINE	1
31	P20395	WASHER, TRANS. MT.	2
30	P18181	RUBBER MTG., TRANS.	2
29	P10730	PIPE PLUG	1
28	P10231	90° STREET ELBOW	1
27	P17210	HOSE, FUEL LINE	A/R
26	P13619	CONNECTOR	1
25	P21317	90° ELBOW	2
24	P10692	REDUCER BUSHING	1
23	15588B	MOTER MOUNT	1
22	15310B	HOSE HOLDER, GUARD	1
21	P13613	HOSE CLAMP	4
20	P10601	HOSE CLAMP	4
19	P17682	HOSE, LOWER RAD.	1
18	P17921	HOSE, UPPER RAD.	1
17	15521C	TRANS. SUPPORT, L.H	1
16	15520C	TRANS. SUPPORT, R.H	1
15	12749C	WHEEL WELDMENT	4
14	P13673	VALVE STEM	4
13	P13894	WHEEL NUT	40
12	P11688	TIRE, 13.00-24, 8 PLY	4
11	P17902	DRIVE SHAFT, REAR	1
10	P17901	DRIVE SHAFT, FRONT	1
9	P18069	AXLE, REAR	1
8	P18068	AXLE, FRONT	1
7	P17829	TRANSMISSION	1
6	P17743	ENGINE, 283 WAUK	1
5	16833	TRANS. DISCONN. ASS'Y	1
4	16831	EXHAUST ASSEMBLY	1
3	16827	AIR CLEANER ASS'Y	1
2	16823	RADIATOR ASSEMBLY	1
1	16819	THROTTLE ASSEMBLY	1

57	COM'L	COTTER PIN, 1/8 × 1	2
56	COM'L	NUT, CASTELATED 5/8-NC	2
55	COM'L	FLATWASHER, 1/2	4
54	COM'L	STARWASHER, 3/4	16
53	COM'L	STARWASHER, 5/8	1
52	COM'L	STARWASHER, 1/2	2
51	COM'L	LOCKWASHER, 5/8	4
50	COM'L	LOCKWASHER, 1/2	8
49	COM'L	LOCKWASHER, 3/8	11
48	P14223	NUT, HX 5/8-11 NC	1
47	P11450	JAM NUT, HX 5/8-11 NC	1
46	P17671	NUT, HX 1/2-13 NC	3
45	P17661	JAM NUT, HX 1/2-13 NC	3

LULL Engineering Co., Inc.
ST. PAUL, MINNESOTA 55121

DRAWN BY: J DAUB

S/N 101-439, 441 & 442

DRAWING TITLE: DRIVE TRAIN ASSEMBLY MODEL 844

WAUK.

SCALE: C

DRAWING NO. 16802

NOTES:

A) FOR S/N 440, 443-924 USE P19507
B) FOR S/N 101-767, 770 & 771 USE P18068
C) FOR S/N 101-767 USE P18069
D) FOR S/N 101-767, 770 & 771 USE P17653
ON FRONT AXLE, 3/4"-16 NF x 8", 8 REQ.
FOR S/N 101-767 USE P17652
ON REAR AXLE, 3/4"-16 NF x 3", 8 REQ.

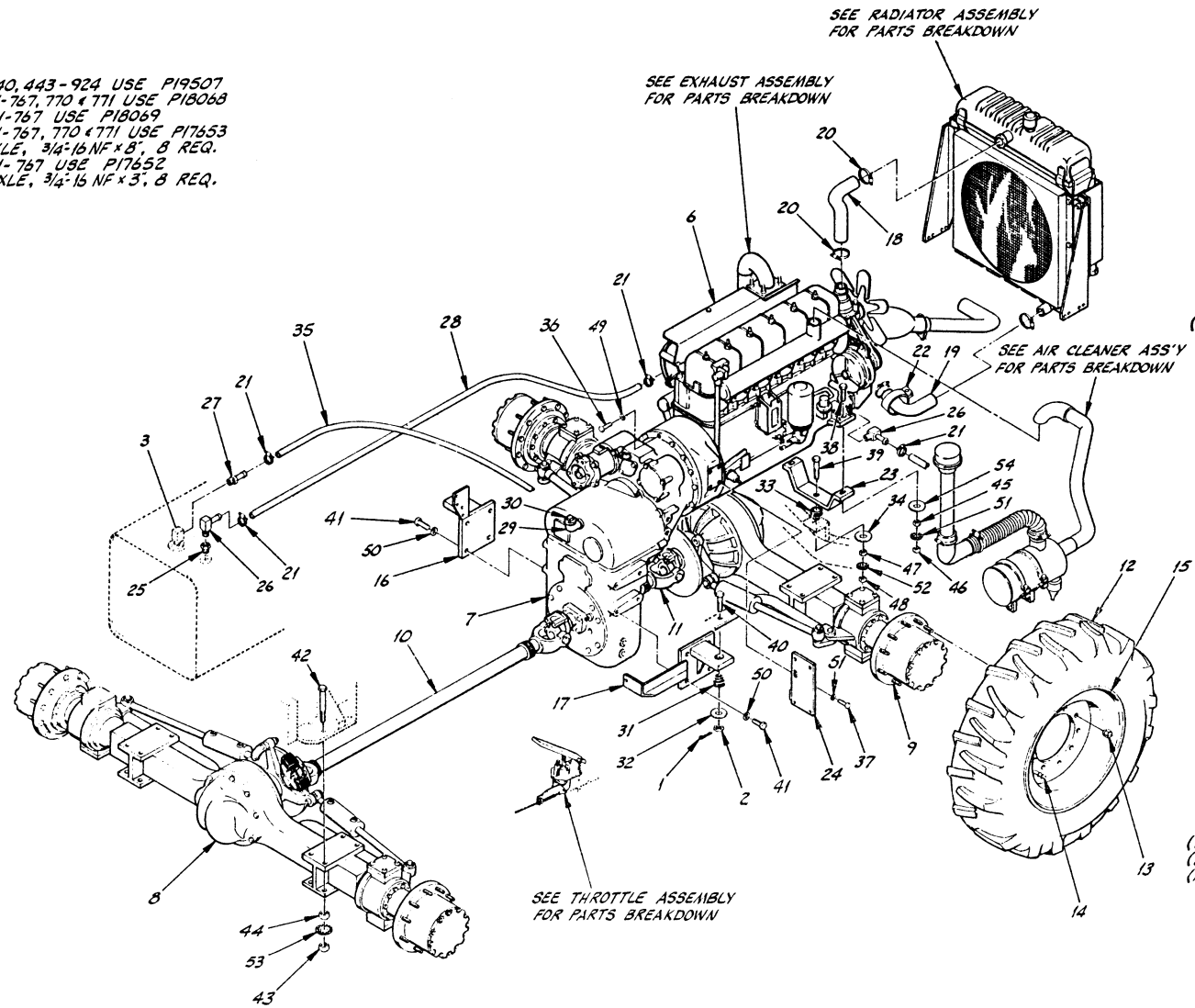

TRANSMISSION DISCONNECT ASS'Y
SEE PARTS BREAKDOWN

ITEM	PART NO.	DESCRIPTION	REQ.
54	COM'L	FLATWASHER, 1/2"	4
53	COM'L	STARWASHER, 3/4"	16
52	COM'L	STARWASHER, 5/8"	1
51	COM'L	STARWASHER, 1/2"	4
50	COM'L	LOCKWASHER, 3/4"	8
49	COM'L	LOCKWASHER, 5/8"	11
48	P17665	NUT, HX 5/8"-18	1
47	P16793	JAM NUT, HX 5/8"-18	1
46	P17671	NUT, HX 1/2"-13	3
45	P17661	JAM NUT, HX 1/2"-13	3
44	P14225	NUT, HX 3/4"-16	16
43	P17662	JAM NUT, 3/4"-16	16
(D) 42	P17504	BOLT, HX 3/4"-16 NF x 7"	16
41	P17830	BOLT, HX 3/4"-10 NC x 1 1/2"	8
40	P17304	BOLT, HX 5/8"-18 NF x 4 1/2"	2
39	P17670	BOLT, HX 5/8"-18 NF x 3"	1
38	P18024	BOLT, HX 1/2"-13 NC x 2 3/4"	2
37	P17666	BOLT, HX 1/2"-13 NC x 1 1/4"	2
36	P15126	BOLT, HX 3/8"-16 NC x 1 1/2"	11
35	N11439	HOSE, RETURN LINE, 3/16"	1
34	P20396	WASHER, ENGINE MT.	1
33	P18180	RUBBER MTG., ENG.	1
32	P20395	WASHER, TRANS. MT.	2
31	P18181	RUBBER MTG., TRANS.	2
30	P10730	PIPE PLUG	1
29	P10231	90° STREET ELBOW	1
28	N11432	HOSE, FUEL LINE, 1/4"	1
27	P13619	CONNECTOR	1
26	P21317	90° ELBOW	2
25	P10690	REDUCER BUSHING	1
24	171198	FUEL INJECTOR BRKT	1
23	155888	MOTOR MOUNT	1
22	153108	HOSE HOLDER, GUARD	1
21	P13613	HOSE CLAMP	4
20	P10601	HOSE CLAMP	4
19	P17682	HOSE, LOWER RAD.	1
18	P17921	HOSE, UPPER RAD.	1
17	17116C	TRANS. SUPPORT, L.H.	1
16	17115C	TRANS. SUPPORT, R.H.	1
15	12749C	WHEEL (RIM)	4
14	P13673	VALVE STEM	4
13	P13894	WHEEL NUT	40
12	P11688	TIRE, 13.00-24, 8 PLY	4
11	P20972	DRIVE SHAFT, REAR	1
10	P20971	DRIVE SHAFT, FRONT	1
(C) 9	P21736	AXLE, REAR	1
(B) 8	P21735	AXLE, FRONT	1
(A) 7	P22305	TRANSMISSION	1
6	P17743	ENGINE, 283 WAUKESHA	1
5			
4			
3	P25362	STAND TUBE	-
2	COM'L	CASTLE NUT, HX. 5/8"-18"	2
1	COM'L	COTTER PIN, 1/8"x1"	2

LULL Engineering Co., Inc. — ST. PAUL, MINNESOTA 55121

DRAWN BY: J DAUB — S/N 440, 443 THRU

DRAWING TITLE: DRIVE TRAIN ASSEMBLY MODEL 844 — WAUK.

SCALE: D

DRAWING NO. 16802-1

NOTES:

A) FOR S/N 795-867 USE P19507.
B) FOR S/N 795-1021 USE P21987.
C) FOR S/N 795-1021 USE P21988.
D) WITH OPTIONAL HEATER USE 18412B.
SHUT-OFF TAP USE P23266
REDUCER BUSHING USE P10120
E) STANDARD EQUIPMENT ON S/N 873 THRU.

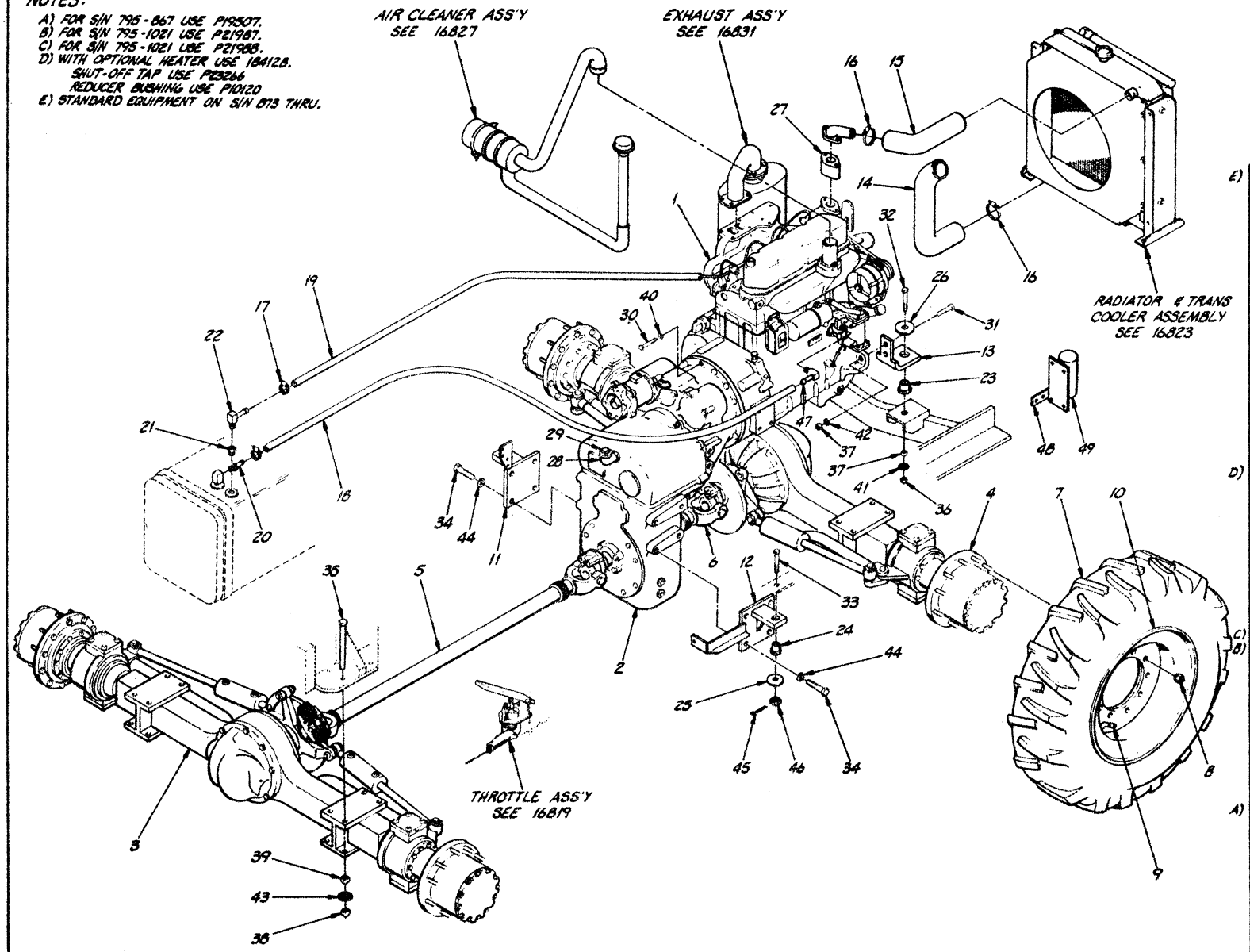

	ITEM	PART NO.	DESCRIPTION	REQ.
E)	49	P21422	QUICK START KIT	1
	48	18512A	BRACKET, QUICK START	1
	47	P21236	CONNECTOR	1
	46	COM'L	CASTLE NUT, HX. 5/8"-18	2
	45	COM'L	COTTER PIN, 1/8"×1"	2
	44	COM'L	LOCKWASHER, 3/4"	8
	43	COM'L	STARWASHER, 3/4"	16
	42	COM'L	LOCKWASHER, 5/8"	4
	41	COM'L	STARWASHER, 5/8"	2
	40	COM'L	LOCKWASHER, 3/8"	11
	39	P14225	NUT, HX. 3/4"-16 NF	16
	38	P17662	JAM NUT, 3/4"-16 NF	16
	37	P17665	NUT, HX. 5/8"-18 NF	4
	36	P16793	JAM NUT, 5/8"-18 NF	2
	35	P17504	BOLT, HX. 3/4"-16 NF×7"	16
	34	P17830	BOLT, HX. 3/4"-10 NC×1 1/2"	8
	33	P17304	BOLT, HX. 5/8"-18 NF×4 1/2"	2
	32	P17670	BOLT, HX. 5/8"-18 NF×3"	4
	31	P17794	BOLT, HX. 5/8"-18 NF×2"	2
	30	P15126	BOLT, HX. 3/8"-16 NC×1 1/2"	11
	29	P10730	PIPE PLUG	1
	28	P10231	90° STREET ELBOW	1
D)	27	P21785	HOUSING EXTENSION	1
	26	P20396	SNUBBING WASHER	2
	25	P20395	SNUBBING WASHER	2
	24	P18181	RUBBER TRANS. MOUNT	2
	23	P18180	RUBBER ENGINE MOUNT	2
	22	P21317	90° ELBOW	2
	21	P10692	REDUCER BUSHING	1
	20	P13619	CONNECTOR	1
	19	P16547	HOSE, RETURN LINE	103"
	18	P17210	HOSE, FUEL LINE	100"
	17	P13613	HOSE CLAMP	4
	16	P10601	HOSE CLAMP	4
C)	15	P24298	HOSE, UPPER RAD.	1
B)	14	P24299	HOSE, LOWER RAD.	1
	13	18668B	MOTOR MOUNT	2
	12	17116C	TRANS SUPPORT, L.H.	1
	11	17115C	TRANS SUPPORT, R.H.	1
	10	12749C	RIM	4
	9	P13673	VALVE STEM	4
	8	P13894	LUG NUT	40
	7	P11688	TIRE, 13:00-24, 8 PLY	4
	6	P20972	DRIVE SHAFT, REAR	1
	5	P20971	DRIVE SHAFT, FRONT	1
	4	P21736	AXLE, REAR	1
	3	P21735	AXLE, FRONT	1
A)	2	P22805	TRANSMISSION, FUNK	1
	1	P21985	ENGINE, 276 DEERE	1

LULL and Engineering Co., Inc. ST. PAUL, MINNESOTA 55121

DRAWN BY Jeff Hunt — S/N 795 THRU

DRAWING TITLE: DRIVE TRAIN ASSEMBLY MODEL 844

DEERE

SCALE D

DRAWING NO. 16802-2

NOTES:

A) WITH OPTIONAL HEATER USE 18412B.
SHUT-OFF TAP USE P23266
REDUCER BUSHING USE P10120

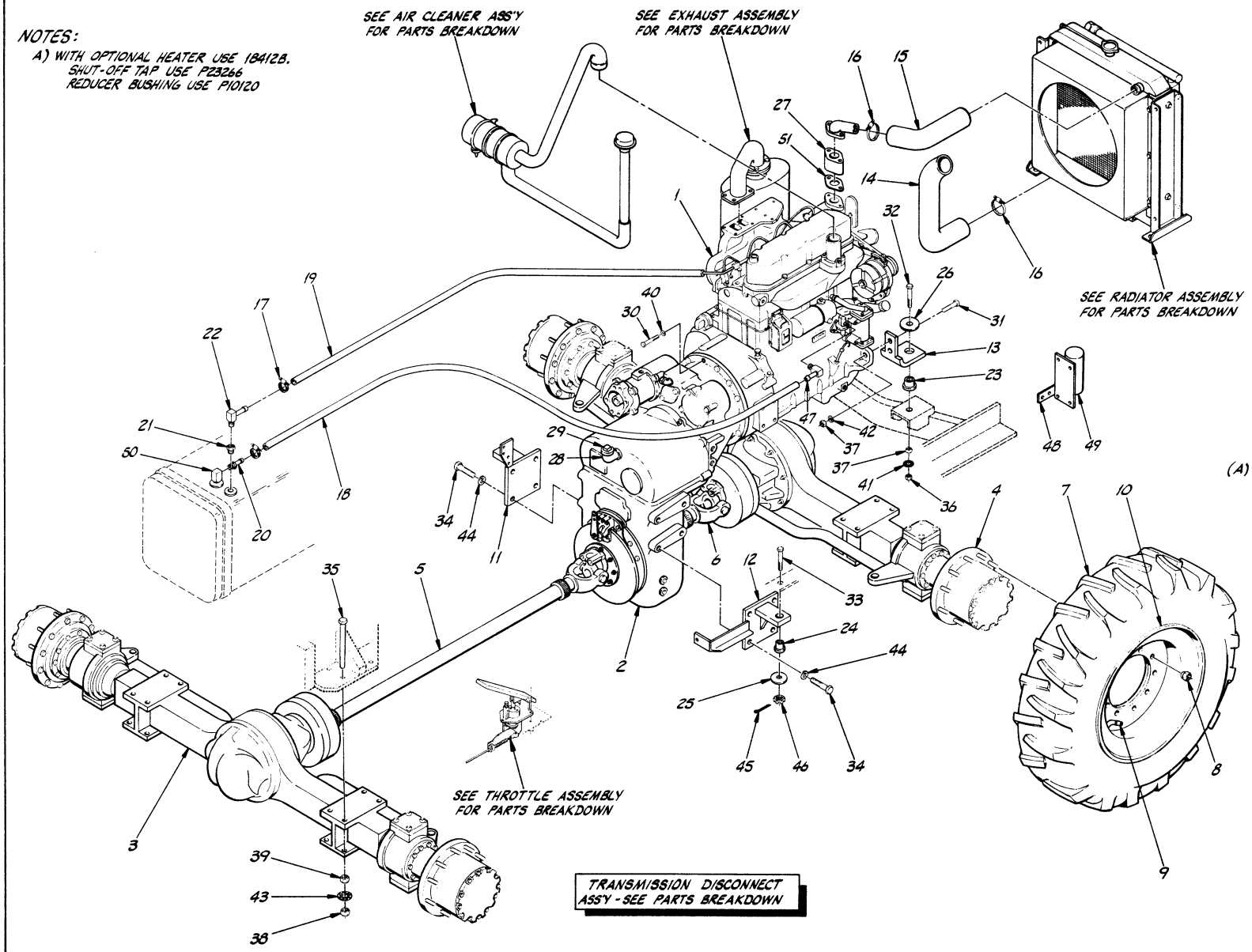

ITEM	PART NO.	DESCRIPTION	REQ.
51	P25386	GASKET	-
50	P25362	STAND TUBE	-
49	P21422	QUICK START KIT	1
48	18512A	BRACKET, QUICK START	1
47	P21236	CONNECTOR	1
46	COM'L	CASTLE NUT, HX. 5/8"-18	2
45	COM'L	COTTER PIN, 1/8"×1"	2
44	COM'L	LOCKWASHER, 3/4"	8
43	COM'L	STARWASHER, 3/4"	16
42	COM'L	LOCKWASHER, 5/8"	4
41	COM'L	STARWASHER, 5/8"	2
40	COM'L	LOCKWASHER, 3/8"	11
39	P14225	NUT, HX. 3/4"-16	16
38	P17662	JAM NUT, 3/4"-16	16
37	P17665	NUT, HX. 5/8"-18	4
36	P16793	JAM NUT, 5/8"-18	2
35	P17504	BOLT, HX. 3/4"-16 NF×7"	16
34	P17830	BOLT, HX. 3/4"-10 NC×1 1/2"	8
33	P17304	BOLT, HX. 5/8"-18 NF×4 1/2"	2
32	P17670	BOLT, HX. 5/8"-18 NF×3"	4
31	P17794	BOLT, HX. 5/8"-18 NF×2"	2
30	P15126	BOLT, HX. 3/8"-16 NC×1 1/2"	11
29	P10730	PIPE PLUG	1
28	P10231	90° STREET ELBOW	1
27	P21785	HOUSING EXTENSION	1
26	P20396	SNUBBING WASHER	2
25	P20395	SNUBBING WASHER	2
24	P18181	RUBBER TRANS. MOUNT	2
23	P18180	RUBBER ENGINE MOUNT	2
22	P21317	90° ELBOW	1
21	P10690	REDUCER BUSHING	1
20	P13619	CONNECTOR	1
19	N11433	HOSE, RETURN LINE, 1/4"	1
18	N11437	HOSE, FUEL LINE, 5/16"	1
17	P13613	HOSE CLAMP	4
16	P10601	HOSE CLAMP	4
15	P24298	HOSE, UPPER RAD.	1
14	P24299	HOSE, LOWER RAD.	1
13	18668B	MOTOR MOUNT	2
12	17116C	TRANS SUPPORT, L.H.	1
11	17115C	TRANS SUPPORT, R.H.	1
10	12749C	RIM	4
9	P13673	VALVE STEM	4
8	P13894	LUG NUT	40
7	P11688	TIRE, 13.00-24, 8 PLY	4
6	P24722	DRIVE SHAFT, REAR	1
5	P21779	DRIVE SHAFT, FRONT	1
4	P24800	AXLE, REAR	1
3	P24801	AXLE, FRONT	1
2	P24604	TRANSMISSION, FUNK	1
1	P21985	ENGINE, 276 DEERE	1

(A)

LULL Engineering Co., Inc. ST. PAUL, MINNESOTA 55121

DRAWN BY Jeff Daub — S/N 1082 THRU

DRAWING TITLE: DRIVE TRAIN ASSEMBLY MODEL 844

DEERE

SCALE D

DRAWING NO. 16802-3

NOTES:
A) WITH OPTIONAL HEATER USE 18412B.

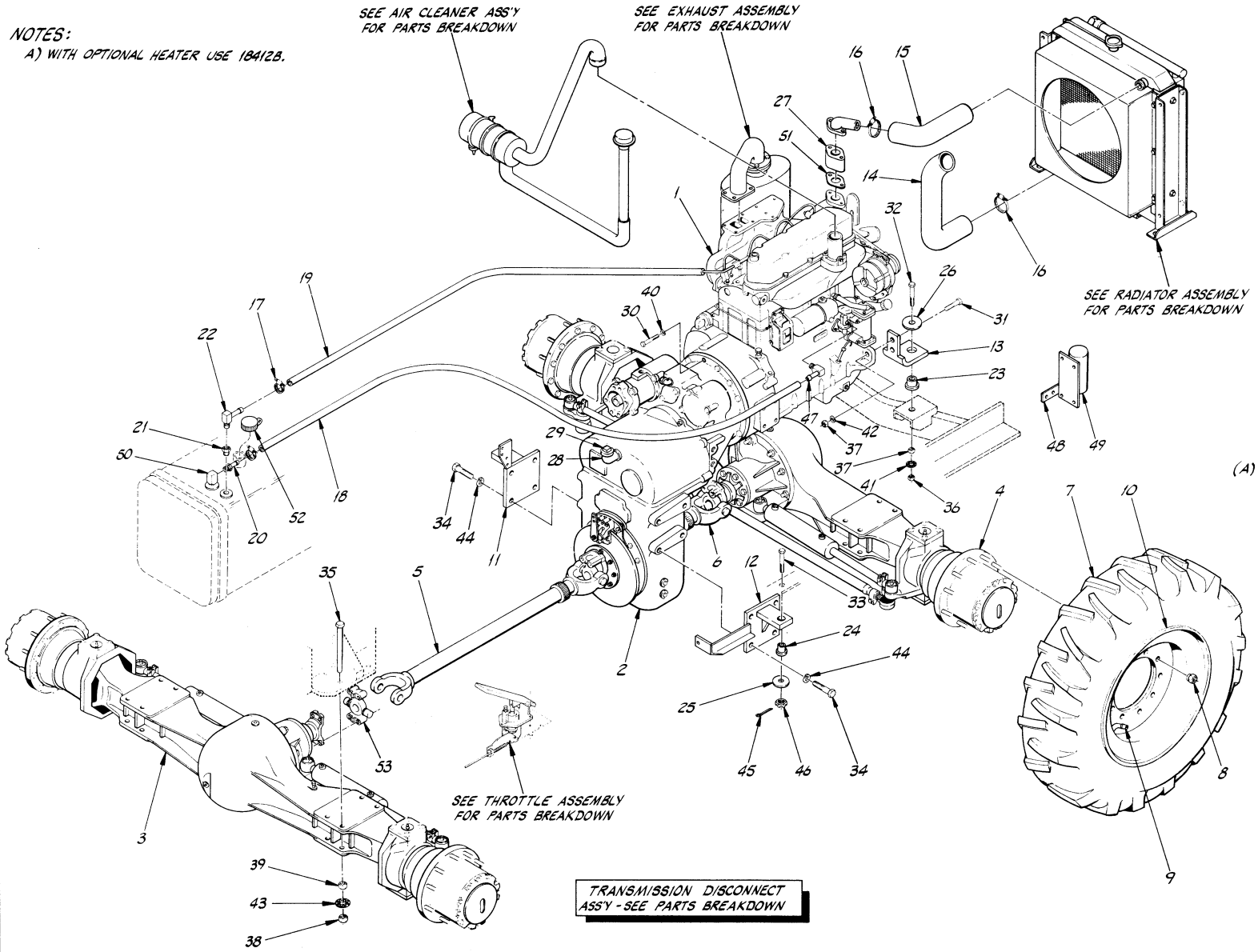

ITEM	PART NO.	DESCRIPTION	REQ.
53	P18749	CROSS & BEARING	-
52	P12182	FUEL CAP	-
51	P25386	GASKET	-
50	P25362	STAND TUBE	-
49	P21422	QUICK START KIT	1
48	18512A	BRACKET, QUICK START	1
47	P21236	CONNECTOR	1
46	P01635	CASTLE NUT, HX. 5/8"-18	2
45	P0383B	COTTER PIN, 1/8" × 1"	2
44	P01315	LOCKWASHER, 3/4"	8
43	P01364	STARWASHER, 3/4"	16
42	P01314	LOCKWASHER, 5/8"	4
41	P01363	STARWASHER, 5/8"	2
40	P01310	LOCKWASHER, 3/8"	11
39	P01536	NUT, HX. 3/4"-16	16
38	P01586	JAM NUT, 3/4"-16	16
37	P01535	NUT, HX. 5/8"-18	4
36	P01585	JAM NUT, 5/8"-18	2
35	P00791	BOLT, HX. 3/4"-16 NF × 7"	16
34	P00700	BOLT, HX. 3/4"-10 NC × 1 1/2"	8
33	P00663	BOLT, HX. 5/8"-18 NF × 4 1/2"	2
32	P00658	BOLT, HX. 5/8"-18 NF × 3"	4
31	P00654	BOLT, HX. 5/8"-18 NF × 2"	2
30	P00206	BOLT, HX. 3/8"-16 NC × 1 1/2"	11
29	P10730	PIPE PLUG	1
28	P10133	90° STREET ELBOW	1
27	P21785	HOUSING EXTENSION	1
26	P20396	SNUBBING WASHER	2
25	P20395	SNUBBING WASHER	2
24	P18181	RUBBER TRANS. MOUNT	2
23	P18180	RUBBER ENGINE MOUNT	2
22	P21317	90° ELBOW	1
21	P10690	REDUCER BUSHING	1
20	P13619	CONNECTOR	1
19	N11433	HOSE, RETURN LINE, 1/4"	1
18	N11437	HOSE, FUEL LINE, 5/16"	1
17	P14047	HOSE CLAMP	4
16	P10601	HOSE CLAMP	4
15	P24298	HOSE, UPPER RAD.	1
14	P24299	HOSE, LOWER RAD.	1
13	18668B	MOTOR MOUNT	2
12	17116C	TRANS SUPPORT, L.H.	1
11	17115C	TRANS SUPPORT, R.H.	1
10	12749C	RIM	4
9	P13673	VALVE STEM	4
8	P13894	LUG NUT	40
7	P11688	TIRE, 13.00-24, 8 PLY	4
6	P21678	DRIVE SHAFT, REAR	1
5	P21779	DRIVE SHAFT, FRONT	1
4	P26154	AXLE, REAR	1
3	P26153	AXLE, FRONT	1
2	P24604	TRANSMISSION, FUNK	1
1	P21985	ENGINE, 276 DEERE	1

(A)

LULL Engineering Co., Inc. — ST. PAUL, MINNESOTA 55121

DRAWN BY: Jeff Neal — S/N 1722, 1724 THRU

DRAWING TITLE: DRIVE TRAIN ASSEMBLY MODEL 844

DEERE

SCALE: D

DRAWING NO. 16802-4

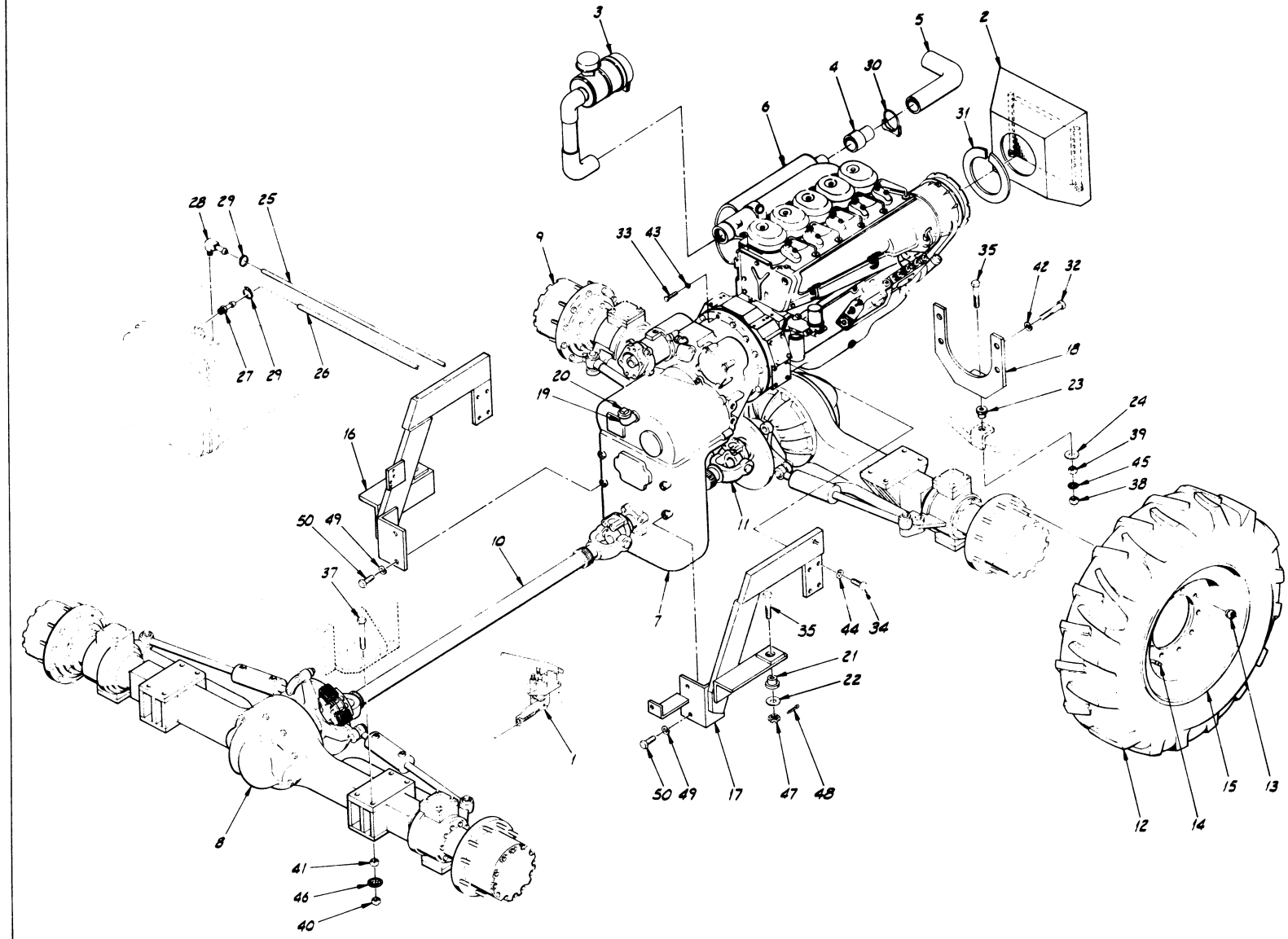

ITEM	PART NO	DESCRIPTION	REQ.
51	16833	TRANS. DISCONN. ASSY	REF
50	P17250	BOLT, HX 5/8-11 NC×1 1/2	4
49	COM'L	LOCKWASHER, 5/8	4
48	COM'L	COTTER PIN 1/8×1	2
47	COM'L	NUT, CASTELATED, 5/8-NC	2
46	COM'L	STARWASHER, 3/4	16
45	COM'L	STARWASHER, 5/8	1
44	COM'L	LOCKWASHER, 1/2	8
43	COM'L	LOCKWASHER, 3/8	11
42	COM'L	LOCKWASHER, M14	4
41	P16225	NUT, HX. 3/4-16 NF	16
40	P17662	JAM NUT, HX. 3/4-16 NF	16
39	P17665	NUT, HX. 5/8-18 NF	1
38	P16793	JAM NUT, HX. 5/8-18 NF	1
37	P17653	BOLT, HX. 3/4-16 NF×8	8
36	P17652	BOLT, HX. 3/4-16 NF×3	8
35	P17304	BOLT, HX. 5/8-18 NF×4 1/2	3
34	P17836	BOLT, HX. 1/2-13 NC×1 1/2	8
33	P15126	BOLT, HX. 3/8-16 NC×1 1/2	11
32	P17756	BOLT, HX. M14-2×104	4
31	P19197	GASKET, SPONGE	A/R
30	P16180	CLAMP, MUFFLER	1
29	P13613	CLAMP, HOSE	4
28	P20830	90° MALE ELBOW	1
27	P16673	CONNECTOR, MALE	1
26	P16547	HOSE, FUEL LINE	115"
25	P17210	HOSE, RETURN LINE	86"
24	P20396	WASHER, ENGINE MT.	1
23	P18180	RUBBER MTG., ENGINE	1
22	P20398	WASHER, TRANS. MTG.	2
21	P18181	RUBBER MTG., TRANS.	2
20	P10730	PIPE PLUG	1
19	P10231	90° STREET ELBOW	1
18	17065C	MOTOR MOUNT	1
17	17061C	TRANS. SUPPORT, L.H.	1
16	17060C	TRANS. SUPPORT, R.H.	1
15	12749C	WHEEL WELDMENT	4
14	P13673	VALVE STEM	4
13	P13894	WHEEL NUT	40
12	P11688	TIRE, 13.00-24, 8 PLY	4
11	P17902	DRIVE SHAFT, REAR	1
10	P17901	DRIVE SHAFT, FRONT	1
9	P18069	AXLE, REAR	1
8	P18068	AXLE, FRONT	1
7	P17829	TRANSMISSION	1
6	P21345	ENGINE, 287 cu. in DEUTZ	1
5	P14150	TAIL PIPE	1
4	17076B	ADAPTOR, EXHAUST	1
3	16828	AIR CLEANER ASS'Y	REF
2	16824	SHROUD & COOLER ASSY	REF
1	16820	THROTTLE ASSEMBLY	REF

LULL Engineering Co., Inc.
ST. PAUL, MINNESOTA 55121

DRAWN BY: J DAUB

S/N 101 - 442

DRAWING TITLE: DRIVE TRAIN ASSEMBLY MODEL 844

DEUTZ

SCALE: D

DRAWING NO. 16803

NOTES:

A) FOR S/N 443-867 USE P19507
B) FOR S/N 101-767 USE P18068
C) FOR S/N 101-767 USE P18069
D) FOR S/N 101-767 USE P17652 ON REAR AXLE, 3/4"-16 NF x 3" AND P17653 ON FRONT AXLE, 3/4"-16 NF x 8". 8 REQUIRED OF EACH.
E) STANDARD EQUIPMENT ON S/N 886 THRU.

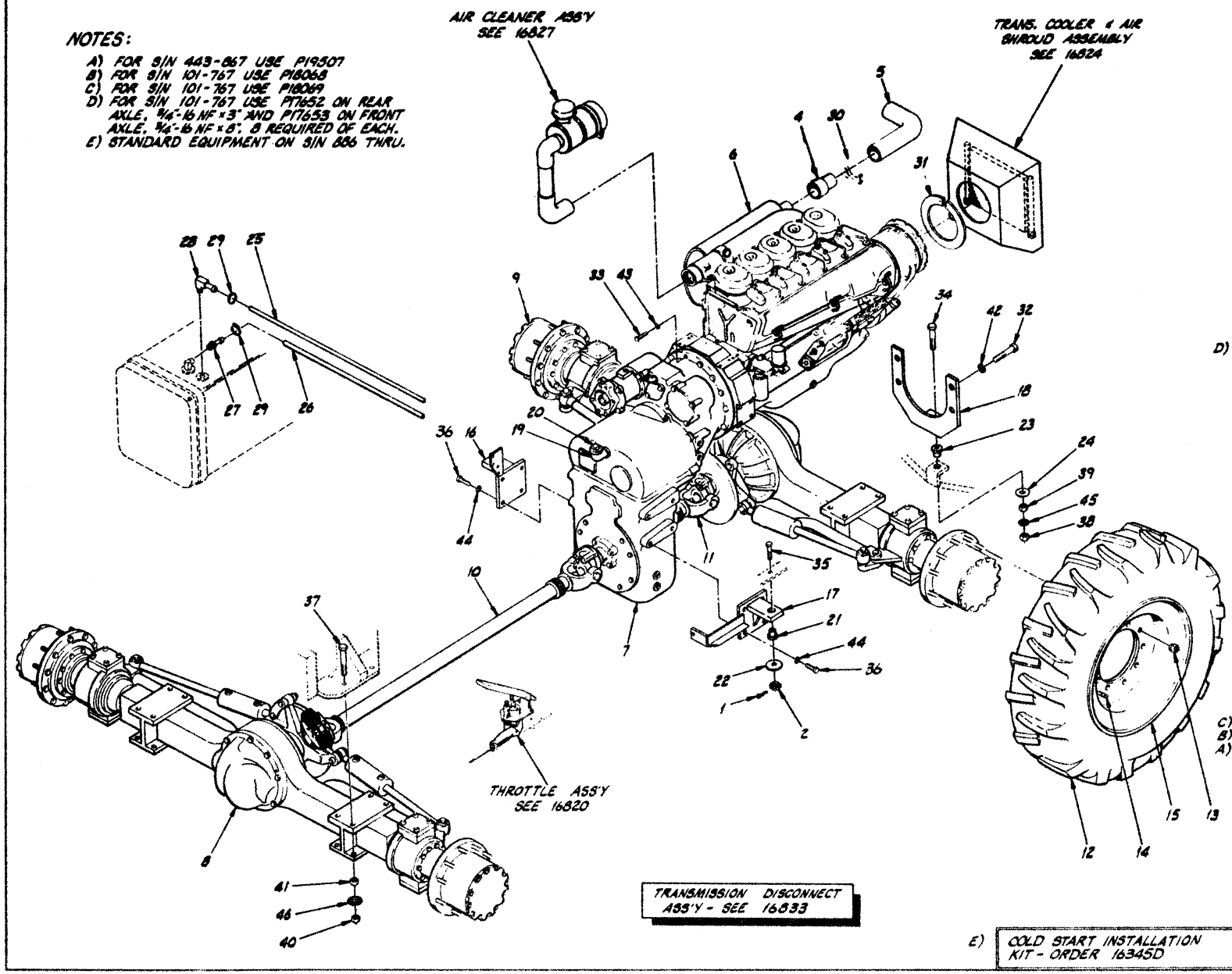

E) COLD START INSTALLATION KIT - ORDER 16345D

	ITEM	PART NO	DESCRIPTION	REQ.
	46	COM'L	STARWASHER, 3/4"	16
	45	COM'L	STARWASHER, 5/8"	1
	44	COM'L	LOCKWASHER, 3/4"	8
	43	COM'L	LOCKWASHER, M10	11
	42	COM'L	LOCKWASHER, M14	4
	41	P14225	NUT, HX. 3/4"-16 NF	16
	40	P17662	JAM NUT, HX. 3/4"-16 NF	16
	39	P17665	NUT, HX. 5/8"-18 NF	1
	38	P16795	JAM NUT, HX. 5/8"-18 NF	1
D)	37	P17504	BOLT, HX. 3/4"-16 NF x 7"	16
	36	P17830	BOLT, HX. 3/4"-10 NC x 1 1/2"	8
	35	P17304	BOLT, HX. 5/8"-18 NF x 4 1/2"	2
	34	P17670	BOLT, HX. 5/8"-18 NF x 3"	1
	33	P17342	BOLT, HX. M10-1.5 x 30 mm	11
	32	P17756	BOLT, HX. M14-2 x 104 mm	4
	31	P19197	GASKET, SPONGE	40"
	30	P12169	CLAMP, MUFFLER	1
	29	P13613	CLAMP, HOSE	4
	28	P20830	90° MALE ELBOW	1
	27	P16673	CONNECTOR, MALE	1
	26	P16347	HOSE, FUEL LINE	115"
	25	P17210	HOSE, RETURN LINE	86"
	24	P20596	WASHER, ENGINE MT.	1
	23	P18180	RUBBER MTG., ENGINE	1
	22	P20595	WASHER, TRANS. MTG.	2
	21	P18181	RUBBER MTG., TRANS.	2
	20	P10730	PIPE PLUG	1
	19	P10231	90° STREET ELBOW	1
	18	17065C	MOTOR MOUNT	1
	17	17116C	TRANS. SUPPORT, L.H.	1
	16	17115C	TRANS. SUPPORT, R.H.	1
	15	12749C	WHEEL WELDMENT	4
	14	P13673	VALVE STEM	4
	13	P13894	WHEEL NUT	40
	12	P11688	TIRE, 13:00-24, 8 PLY	4
	11	P20972	DRIVE SHAFT, REAR	1
	10	P20971	DRIVE SHAFT, FRONT	1
C)	9	P21736	AXLE, REAR	1
B)	8	P21735	AXLE, FRONT	1
A)	7	P22808	TRANSMISSION	1
	6	P21345	ENGINE, 287 cu. in. DEUTZ	1
	5	P16150	TAIL PIPE	1
	4	17076B	ADAPTOR, EXHAUST	1
	3			
	2	COM'L	CASTLE NUT, HX. 5/8"-18	2
	1	COM'L	COTTER PIN, 1/8" x 1"	2

LULL Engineering Co., Inc. — ST. PAUL, MINNESOTA

DRAWN BY: J. DAUB — S/N 443 - 1081

DRAWING TITLE: DRIVE TRAIN ASSEMBLY MODEL 844

DEUTZ

SCALE: D

DRAWING NO. 16803-1

Fuel Shut OFF-Cable P20078

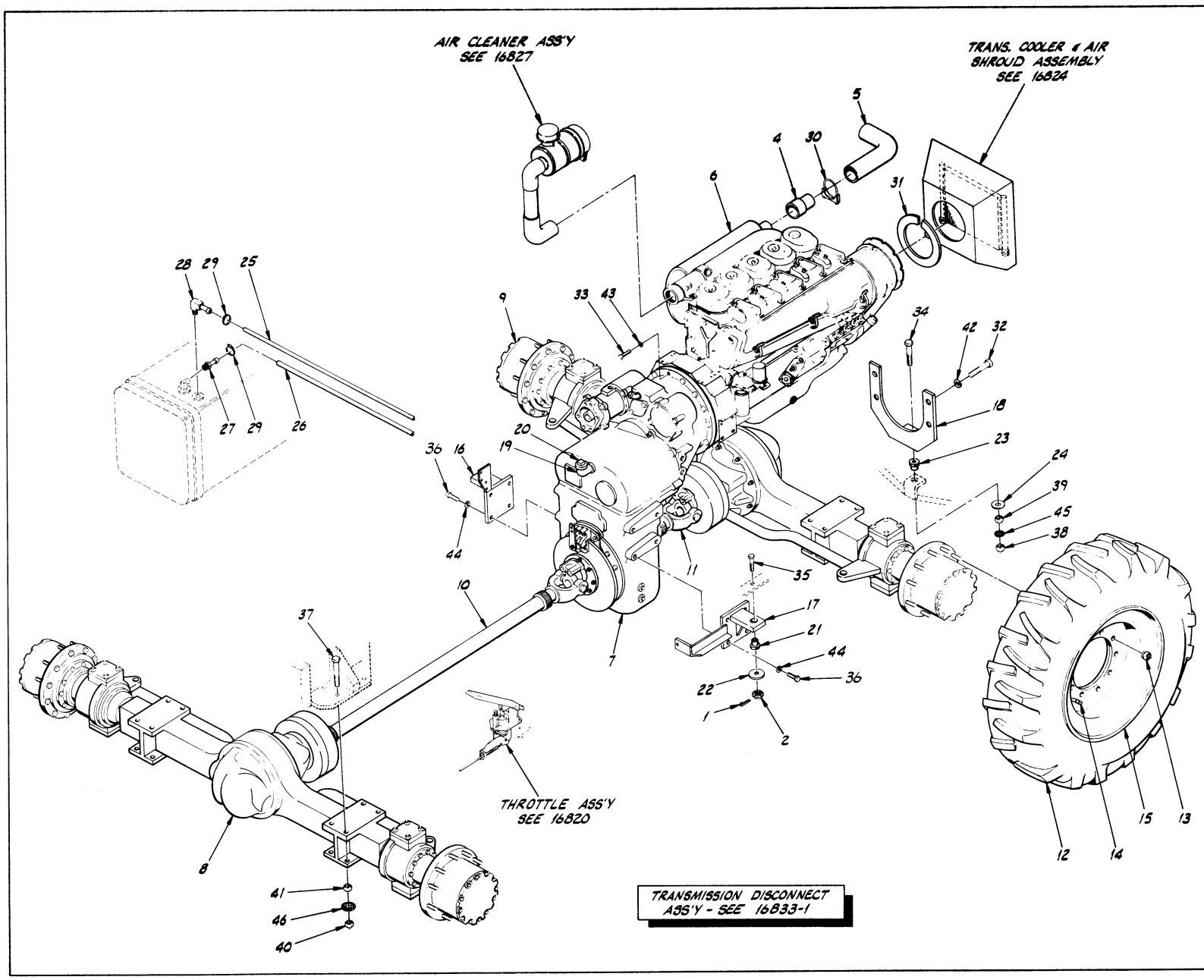

ITEM	PART NO	DESCRIPTION	REQ.
46	COM'L	STARWASHER, 3/4"	16
45	COM'L	STARWASHER, 5/8"	1
44	COM'L	LOCKWASHER, 3/4"	8
43	COM'L	LOCKWASHER, M10	11
42	COM'L	LOCKWASHER, M14	4
41	P14225	NUT, HX. 3/4"-16 NF	16
40	P17662	JAM NUT, HX. 3/4"-16 NF	16
39	P17665	NUT, HX. 5/8"-18 NF	1
38	P16793	JAM NUT, HX. 5/8"-18 NF	1
37	P17504	BOLT, HX. 3/4"-16 NF x 7"	16
36	P17830	BOLT, HX. 3/4"-10 NC x 1 1/2"	8
35	P17304	BOLT, HX. 5/8"-18 NF x 4 1/2"	2
34	P17670	BOLT, HX. 5/8"-18 NF x 3"	1
33	P17342	BOLT, HX. M10-1.5 x 30mm	11
32	P17756	BOLT, HX. M14-2 x 104mm	4
31	P19197	GASKET, SPONGE	40"
30	P12169	CLAMP, MUFFLER	1
29	P13613	CLAMP, HOSE	4
28	P20830	90° MALE ELBOW	1
27	P16673	CONNECTOR, MALE	1
26	P16547	HOSE, FUEL LINE	115"
25	P16523	HOSE, RETURN LINE	86"
24	P20396	WASHER, ENGINE MT.	1
23	P18180	RUBBER MTG., ENGINE	1
22	P20395	WASHER, TRANS. MTG.	2
21	P18181	RUBBER MTG., TRANS.	2
20	P10730	PIPE PLUG	1
19	P10231	90° STREET ELBOW	1
18	17065C	MOTOR MOUNT	1
17	17116C	TRANS. SUPPORT, LH.	1
16	17115C	TRANS. SUPPORT, R.H.	1
15	12749C	WHEEL WELDMENT	4
14	P13673	VALVE STEM	4
13	P13894	WHEEL NUT	40
12	P11688	TIRE, 13:00-24, 8 PLY	4
11	P24722	DRIVE SHAFT, REAR	1
10	P21779	DRIVE SHAFT, FRONT	1
9	P24800	AXLE, REAR	1
8	P24801	AXLE, FRONT	1
7	P24604	TRANSMISSION	1
6	P21345	ENGINE, 287 cu. in. DEUTZ	1
5	P14150	TAIL PIPE	1
4	17076B	ADAPTOR, EXHAUST	1
3			
2	COM'L	CASTLE NUT, HX. 5/8"-18	2
1	COM'L	COTTER PIN, 1/8"x1"	2

LULL Engineering Co., Inc. — ST. PAUL, MINNESOTA 55121

DRAWN BY: J DAUB — S/N 1082 THRU

DRAWING TITLE: DRIVE TRAIN ASSEMBLY MODEL 844

DEUTZ

SCALE: 0

DRAWING NO. 16803-2

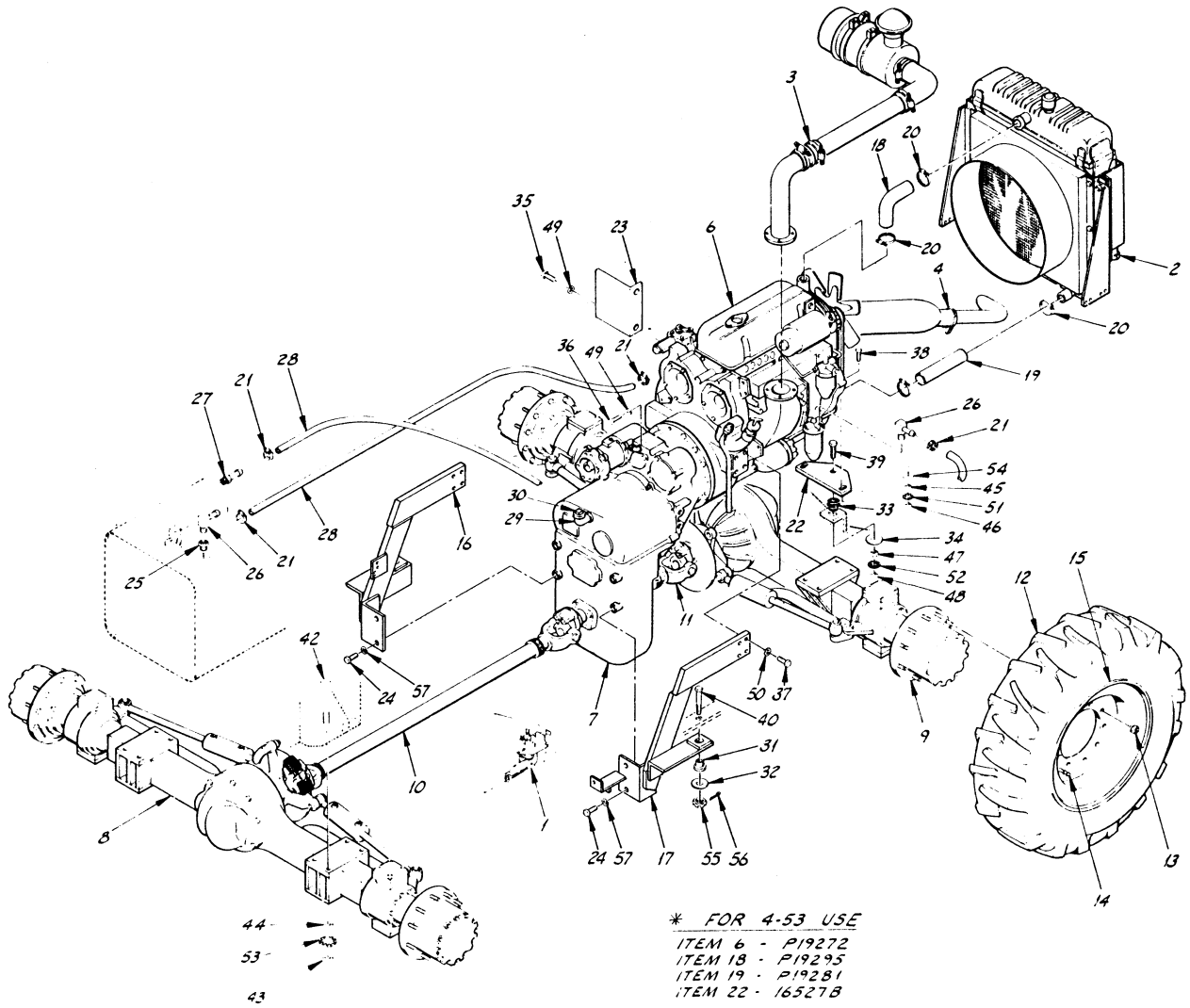

* FOR 4-53 USE

ITEM 6 - P19272
ITEM 18 - P19295
ITEM 19 - P19281
ITEM 22 - 16527B

ITEM	PART NO.	DESCRIPTION	REQ.
57	COM'L	LOCKWASHER, 5/8	4
56	COM'L	COTTER PIN, 1/8 x 1	2
55	COM'L	NUT, CASTELATED, 5/8-11	2
54	COM'L	FLATWASHER, 1/2	2
53	COM'L	STARWASHER, 3/4	16
52	COM'L	STARWASHER, 5/8	1
51	COM'L	STARWASHER, 1/2	2
50	COM'L	LOCKWASHER, 1/2	8
49	COM'L	LOCKWASHER, 5/8	13
48	P14223	NUT, HX 5/8-11 NC	1
47	P11450	JAM NUT, HX 5/8-11 NC	1
46	P17671	NUT, HX 1/2-13 NC	2
45	P17661	JAM NUT, HX 1/2-13 NC	2
44	P14225	NUT, HX 3/4-16 NF	16
43	P17662	JAM NUT, HX 3/4-16 NF	16
42	P17653	BOLT, HX 3/4-16 NF x 8	8
41	P17652	BOLT, HX 3/4-16 NF x 3	8
40	P17304	BOLT, HX 5/8-11 NC x 4 1/2	2
39	P17795	BOLT, HX 5/8-11 NC x 3 1/2	1
38	P18024	BOLT, HX 1/2-13 NC x 2 3/4	2
37	P17836	BOLT, HX 1/2-13 NC x 1 1/2	8
36	P15126	BOLT, HX 5/8-16 NC x 1 1/2	11
35	P12884	BOLT, HX 5/8-16 NC x 3/4	2
34	P20396	WASHER, ENGINE MT.	1
33	P18180	RUBBER MTG., ENG.	1
32	P20395	WASHER, TRANS. MT.	2
31	P18181	RUBBER MTG., TRANS.	2
30	P10730	PIPE PLUG	1
29	P10231	90° STREET ELBOW	1
28	P16666	HOSE, FUEL LINE	A/R
27	P16673	MALE CONNECTOR	1
26	P21317	90° ELBOW, BRASS	2
25	P10692	REDUCER BUSHING	1
24	P17250	BOLT, HX 5/8-11 NC x 1 1/2	4
23	16897A	HEAT SHIELD	1
* 22	16570B	MOTOR MOUNT	1
21	P13613	HOSE CLAMP	4
20	P10601	HOSE CLAMP	4
* 19	P19470	HOSE, LOWER RAD.	1
* 18	P19469	HOSE, UPPER RAD.	1
17	15521-1C	TRANS SUPP'T, L.H.	1
16	15520-1C	TRANS SUPP'T, R.H.	1
15	12749C	WHEEL WELDMENT	4
14	P13673	VALVE STEM	4
13	P13894	WHEEL NUT	40
12	P11688	TIRE, 13:00-24, 8 PLY	4
11	P17902	DRIVE SHAFT, REAR	1
10	P17901	DRIVE SHAFT, FRONT	1
9	P18069	AXLE, REAR	1
8	P18068	AXLE, FRONT	1
7	P18812	TRANSMISSION	1
* 6	P19500	ENGINE, 3-53 DETROIT	1
5	16833	TRANS DISCONNECT	1
4	16832	EXHAUST ASSEMBLY	1
3	16829	AIR CLEANER ASS'Y	1
2	16825	RADIATOR ASSEMBLY	1
1	16821	THROTTLE ASSEMBLY	1

LULL Engineering Co., Inc.
ST. PAUL, MINNESOTA 56121

DRAWN BY: J DAUB
S/N 101-427 & 632-660

DRAWING TITLE: DRIVE TRAIN ASSEMBLY MODEL 844

DETROIT

SCALE: D

DRAWING NO. 16804

NOTES:

A) FOR S/N 428-631, 661-884 USE P20834.
B) FOR S/N 101-767 USE P18068.
C) FOR S/N 101-767 USE P18069.
D) FOR S/N 101-767 USE P17652 ON REAR AXLE, 3/4"-16 NF x 3" AND P17653 ON FRONT AXLE, 3/4"-16 NF x 8". 8 REQUIRED OF EACH.
E) STANDARD EQUIPMENT ON S/N 873 THRU.

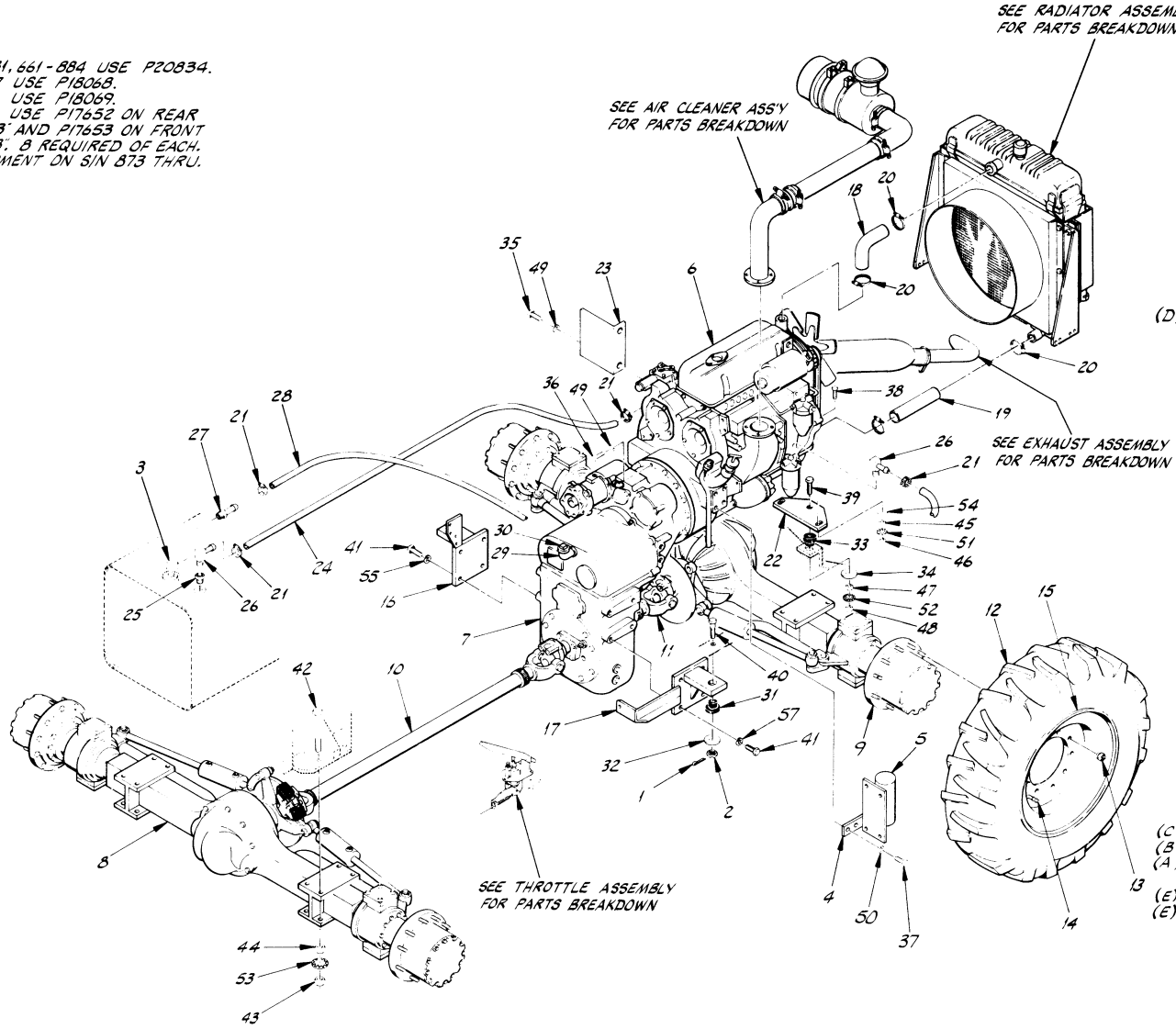

TRANSMISSION DISCONNECT ASS'Y
SEE PARTS BREAKDOWN

ITEM	PART NO.	DESCRIPTION	REQ.
55	COM'L	LOCKWASHER, 3/4"	8
54	COM'L	FLATWASHER, 1/2"	2
53	COM'L	STARWASHER, 3/4"	16
52	COM'L	STARWASHER, 5/8"	1
51	COM'L	STARWASHER, 1/2"	2
50	COM'L	LOCKWASHER, 1/2"	2
49	COM'L	LOCKWASHER, 3/8"	13
48	P17665	NUT, HX 5/8"-18	1
47	P16793	JAM NUT, HX 5/8"-18	1
46	P17671	NUT, HX 1/2"-13	2
45	P17661	JAM NUT, HX 1/2"-13	2
44	P14225	NUT, HX 3/4"-16	16
43	P17662	JAM NUT, HX 3/4"-16	16
(D) 42	P17504	BOLT, HX 3/4"-16 NF x 7"	16
41	P17830	BOLT, HX 3/4"-10 NC x 1 1/2"	8
40	P17304	BOLT, HX 5/8"-18 NF x 4 1/2"	2
39	P17670	BOLT, HX 5/8"-18 NF x 3"	1
38	P18024	BOLT, HX 1/2"-13 NC x 2 3/4"	2
37	P17666	BOLT, HX 1/2"-13 NC x 1 1/4"	2
36	P15126	BOLT, HX 3/8"-16 NC x 1 1/2"	11
35	P12884	BOLT, HX 3/8"-16 NC x 3/4"	2
34	P20396	WASHER, ENGINE MT.	1
33	P18180	RUBBER MTG., ENG.	1
32	P20395	WASHER, TRANS. MT.	2
31	P18181	RUBBER MTG., TRANS.	2
30	P10730	PIPE PLUG	1
29	P10231	90° STREET ELBOW	1
28	N11440	HOSE, FUEL LINE, 3/8	1
27	P16672	MALE CONNECTOR	1
26	P21317	90° ELBOW, BRASS	2
25	P10690	REDUCER BUSHING	1
24	N11436	HOSE, RETURN LINE, 5/16	1
23	16897A	HEAT SHIELD	1
22	165708	MOTOR MOUNT	1
21	P13613	HOSE CLAMP	4
20	P10601	HOSE CLAMP	4
19	P19470	HOSE, LOWER RAD.	1
18	P19469	HOSE, UPPER RAD.	1
17	17116C	TRANS SUPP'T, L.H.	1
16	17115C	TRANS SUPP'T, R.H.	1
15	12749C	WHEEL (RIM)	4
14	P13673	VALVE STEM	4
13	P13894	WHEEL NUT	40
12	P11688	TIRE, 13.00-24, 8 PLY	4
11	P20972	DRIVE SHAFT, REAR	1
10	P20971	DRIVE SHAFT, FRONT	1
(C) 9	P21736	AXLE, REAR	1
(B) 8	P21735	AXLE, FRONT	1
(A) 7	P22804	TRANSMISSION	1
6	P19500	ENGINE, 3-53 DETROIT	1
(E) 5	P21422	QUICK START KIT	1
(E) 4	18512A	BRACKET, QUICK START	1
3	P25362	STAND TUBE	-
2	COM'L	CASTLE NUT, HX. 5/8"-18	2
1	COM'L	COTTER PIN, 1/8" x 1"	2

LULL 4/85 Engineering Co., Inc. — ST. PAUL, MINNESOTA 55121

DRAWN BY: J DAUB

S/N 428-631, 661-1081

DRAWING TITLE: DRIVE TRAIN ASSEMBLY MODEL 844

DETROIT

SCALE: D

DRAWING NO. 16804-1

NOTES:

A) FOR S/N 1095 USE 16557A.

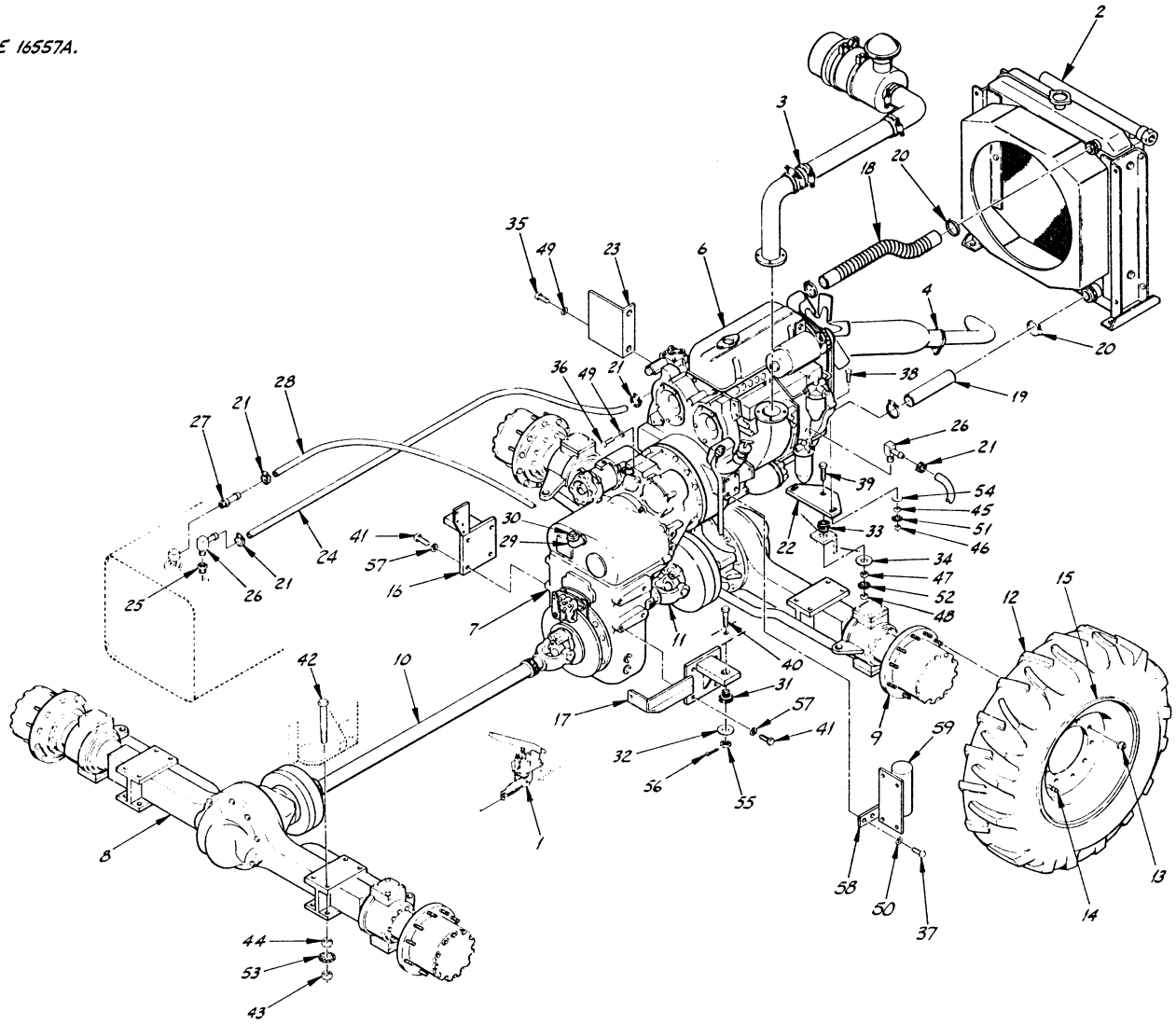

ITEM	PART NO.	DESCRIPTION	REQ.
59	P21422	QUICK START KIT	1
58	18512A	BRACKET, QUICK START	1
57	COM'L	LOCKWASHER, 3/4	8
56	COM'L	COTTER PIN, 1/8 x 1	2
55	COM'L	NUT, CASTELATED, 5/8-18	2
54	COM'L	FLATWASHER, 1/2	2
53	COM'L	STARWASHER, 3/4	16
52	COM'L	STARWASHER, 5/8	1
51	COM'L	STARWASHER, 1/2	2
50	COM'L	LOCKWASHER, 1/2	2
49	COM'L	LOCKWASHER, 5/8	13
48	P17665	NUT, HX 5/8-18	1
47	P16793	JAM NUT, HX 5/8-18	1
46	P17671	NUT, HX 1/2-13	2
45	P17661	JAM NUT, HX 1/2-13	2
44	P14225	NUT, HX 3/4-16	16
43	P17662	JAM NUT, HX 3/4-16	16
42	P17504	BOLT, HX 3/4-16 NF x 7	16
41	P17830	BOLT, HX 3/4-10 NC x 1 1/2	8
40	P17304	BOLT, HX 5/8-18 NF x 4 1/2	2
39	P17670	BOLT, HX 5/8-18 NF x 3	1
38	P18024	BOLT, HX 1/2-13 NC x 2 3/4	2
37	P17666	BOLT, HX 1/2-13 NC x 1 1/4	2
36	P15126	BOLT, HX 5/8-16 NC x 1 1/2	11
35	P12884	BOLT, HX 5/8-16 NC x 3/4	2
34	P20396	WASHER, ENGINE MT.	1
33	P18180	RUBBER MTG., ENG.	1
32	P20395	WASHER, TRANS. MT.	2
31	P18181	RUBBER MTG., TRANS.	2
30	P10730	PIPE PLUG	1
29	P10231	90° STREET ELBOW	1
28	P16666	HOSE, FUEL LINE, 3/16"	101'
27	P16672	MALE CONNECTOR	1
26	P21317	90° ELBOW, BRASS	2
25	P10692	REDUCER BUSHING	1
24	P16547	HOSE, RETURN LINE, 5/16"	92'
23	16897A	HEAT SHIELD	1
22	16570B	MOTOR MOUNT	1
21	P13613	HOSE CLAMP	4
20	P10601	HOSE CLAMP	4
A) 19	16558A	HOSE, LOWER RAD.	1
18	P17681	HOSE, UPPER RAD.	1
17	17116C	TRANS SUPP'T, L.H.	1
16	17115C	TRANS SUPP'T, R.H.	1
15	12749C	WHEEL	4
14	P13673	VALVE STEM	4
13	P13894	WHEEL NUT	40
12	P11688	TIRE, 13.00-24, 8 PLY	4
11	P24722	DRIVE SHAFT, REAR	1
10	P21779	DRIVE SHAFT, FRONT	1
9	P24800	AXLE, REAR	1
8	P24801	AXLE, FRONT	1
7	P24603	TRANSMISSION	1
6	P19500	ENGINE, 3-53 DETROIT	1
5	16833	TRANS DISCONNECT	REF.
4	16832	EXHAUST ASSEMBLY	REF.
3	16829	A/R CLEANER ASS'Y	REF.
2	16825	RADIATOR ASSEMBLY	REF.
1	16821	THROTTLE ASSEMBLY	REF.

LULL Engineering Co., Inc. — ST. PAUL, MINNESOTA 55121

DRAWN BY: J DAUB

S/N 1082 THRU

DRAWING TITLE: DRIVE TRAIN ASSEMBLY MODEL 844

DETROIT

SCALE: D

DRAWING NO. 16804-2

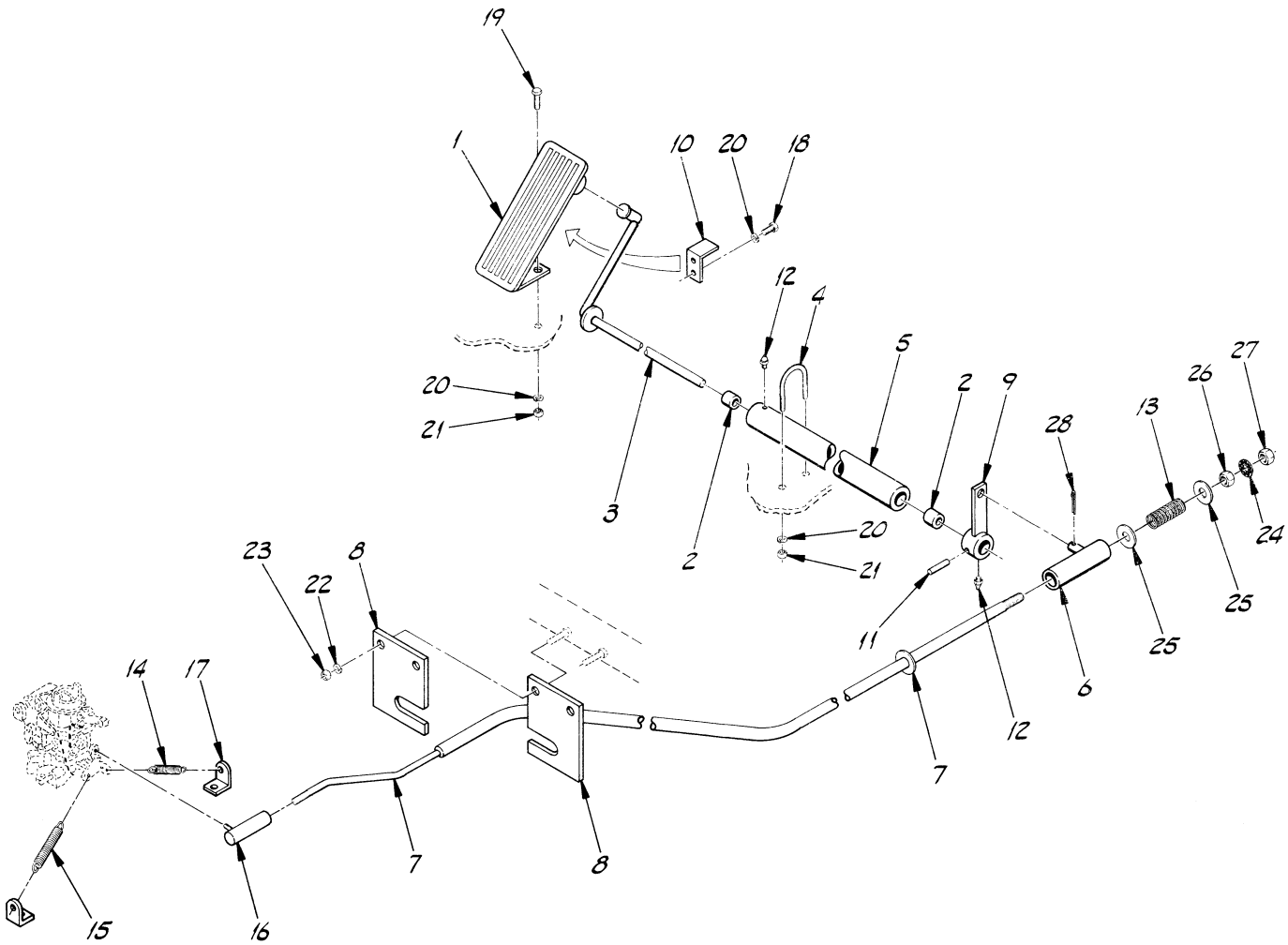

ITEM	PART NO.	DESCRIPTION	REQ.
28	COM'L	COTTER PIN, 1/8" x 3/4"	1
27	COM'L	JAM NUT, HX. 3/8"-16 NC	1
26	COM'L	NUT, HX. 3/8"-16 NC	1
25	COM'L	FLATWASHER, 3/8"	2
24	COM'L	STARWASHER, 3/8"	1
23	COM'L	NUT, HX. 5/16"-18 NC	2
22	COM'L	LOCKWASHER, 5/16"	2
21	COM'L	NUT, HX. 1/4"-20 NC	6
20	COM'L	LOCKWASHER, 1/4"	8
19	COM'L	BOLT, HX. 1/4"-20 NC x 3/4"	2
18	COM'L	BOLT, HX. 1/4"-20 NC x 1/2"	2
17	13758A	ANCHOR, SPRING	2
16	P12979	BALL JOINT	1
15	P15274	SPRING, LONG	1
14	P17337	SPRING, SHORT	1
13	P19187	SPRING, THROTTLE ROD	1
12	P16611	GREASE ZERK	1
11	P10350	ROLL PIN	1
10	15549A	PEDAL STOP	1
9	15547A	LEVER PIVOT	1
8	15546A	SUPPORT BRACE	2
7	15545B	THROTTLE ROD	1
6	15544A	SLEEVE, THROTTLE ROD	1
5	15543A	SLEEVE, PIVOT ROD	1
4	15542A	U-CLAMP	2
3	15541A	PIVOT ROD	1
2	P19115	BUSHING	2
1	P17737	ACCELERATOR PEDAL	1

LULL 5/81 Engineering Co., Inc.
ST. PAUL, MINNESOTA 55121

DRAWN BY Jeff Daul

S/N 101-194, 197-215, 217-219

DRAWING TITLE
THROTTLE ASSEMBLY MODEL 844

CHRYS.

SCALE C

DRAWING NO. 16818

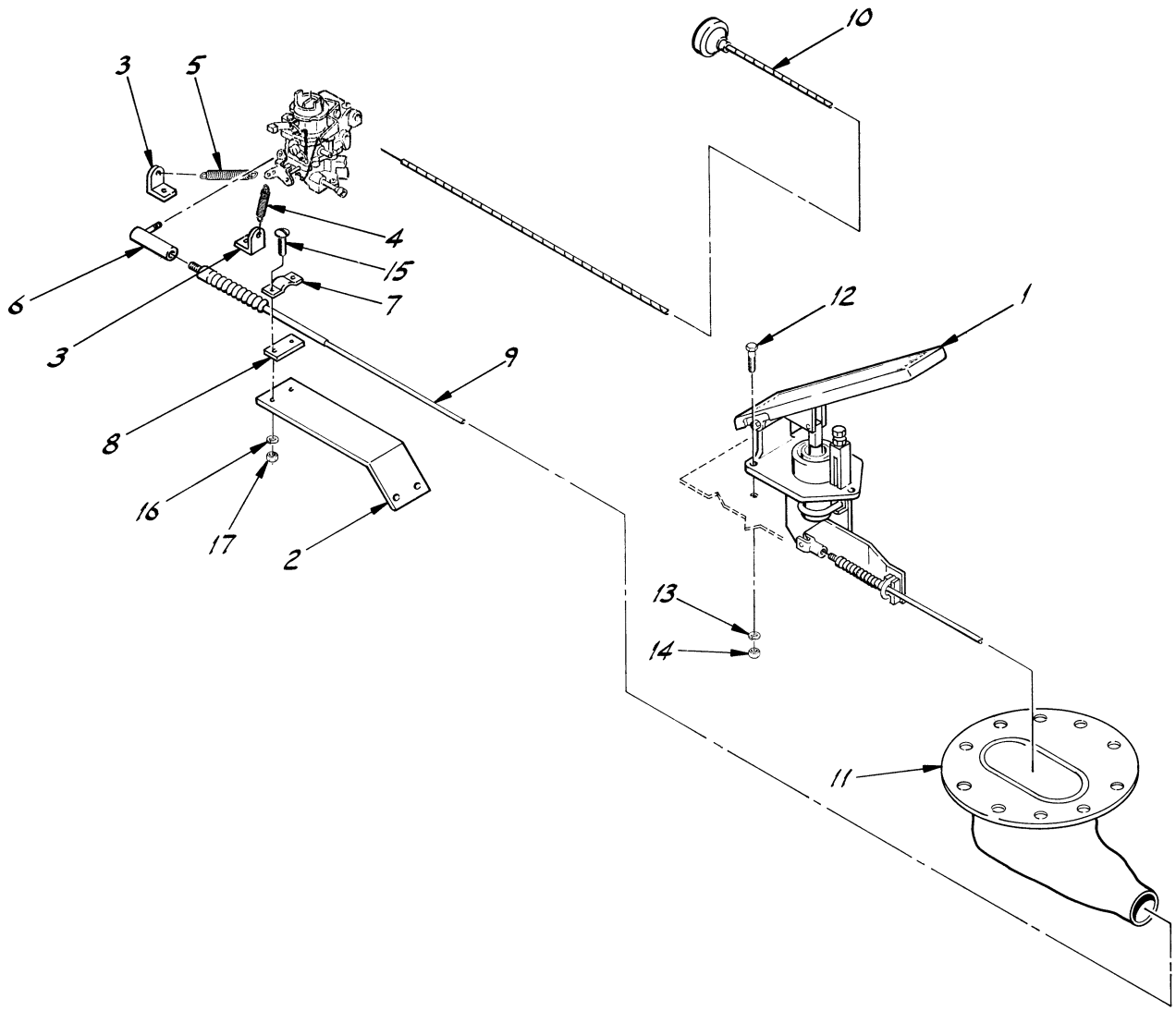

ITEM	PART NO.	DESCRIPTION	REQ.
17	COM'L	NUT, FULL #10-24	2
16	COM'L	LOCKWASHER, #10	2
15	COM'L	CAPSCREW, R.H. #10-24 × 1"	2
14	COM'L	NUT, HX 1/4"-20	3
13	COM'L	LOCKWASHER, 1/4"	3
12	COM'L	BOLT, HX 1/4"-20 × 1"	3
11	P19268	BOOT GUARD, RUBBER	1
10	P20078	CABLE, CHOKE	1
9	P19264	CABLE, THROTTLE	1
8	P19128	SHIM	1
7	P17678	CLAMP, CABLE	1
6	P10505	BALL JOINT	1
5	P15274	SPRING, 6"	1
4	P17337	SPRING, 3"	1
3	13758A	ANCHOR, SPRING	2
2	16174B	CABLE SUPPT BRKT.	1
1	P19263	ACCELERATOR PEDAL	1

LULL 4/85 Engineering Co., Inc.
ST. PAUL, MINNESOTA 55121

DRAWN BY: J DAUB

S/N 196, 216, 220 THRU

DRAWING TITLE: THROTTLE ASSEMBLY MODEL 844

CHRYS

SCALE: C

DRAWING NO. 16818-1

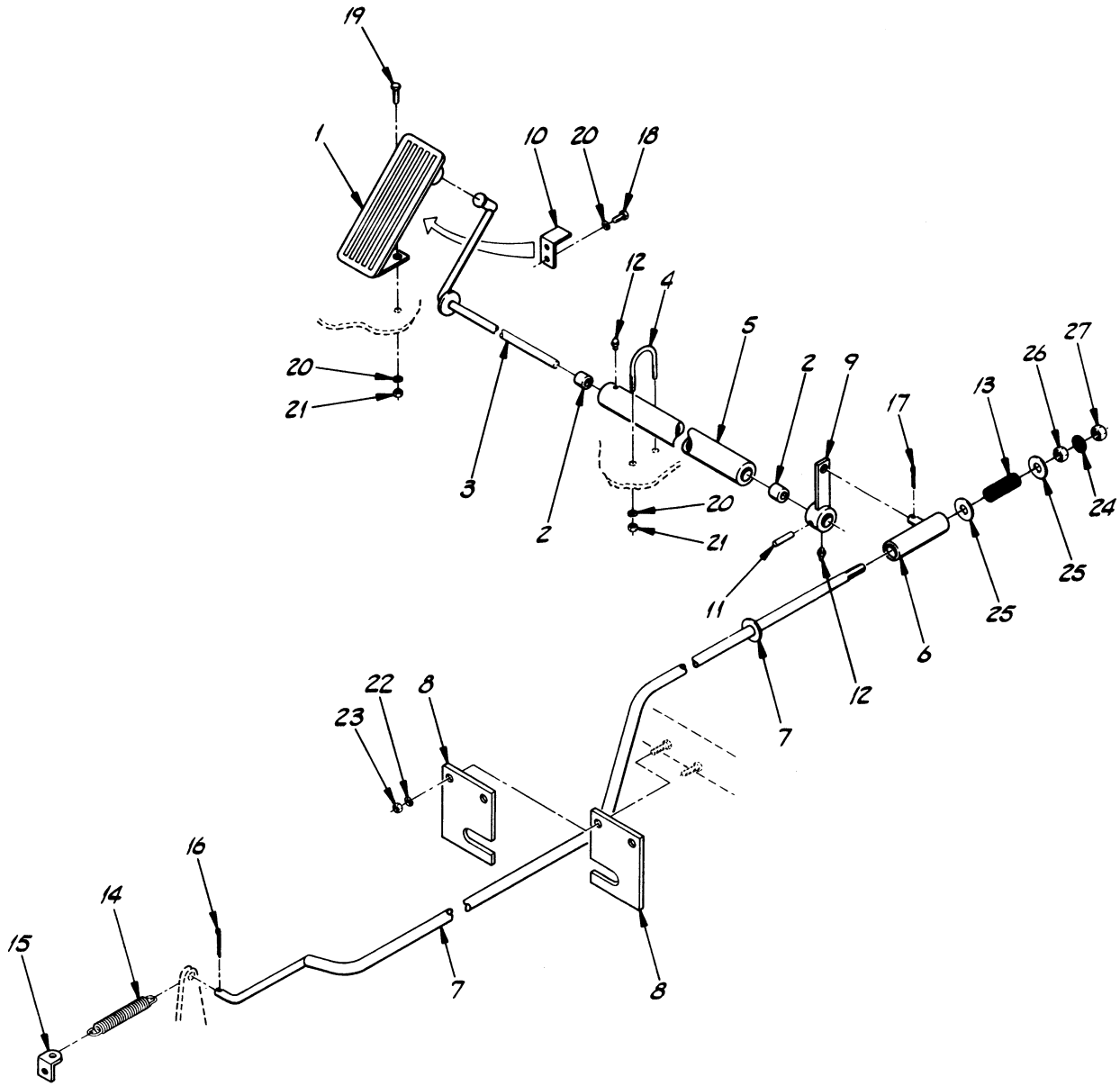

ITEM	PART NO.	DESCRIPTION	REQ.
27	COM'L	JAM NUT, HX. 3/8"-16 NC	1
26	COM'L	NUT, HX. 3/8"-16 NC	1
25	COM'L	FLATWASHER, 3/8"	2
24	COM'L	STARWASHER, 3/8"	1
23	COM'L	NUT, HX. 5/16"-18 NC	2
22	COM'L	LOCKWASHER, 5/16"	2
21	COM'L	NUT, HX. 1/4"-20 NC	6
20	COM'L	LOCKWASHER, 1/4"	8
19	COM'L	BOLT, HX. 1/4"-20 NC x 3/4"	2
18	COM'L	BOLT, HX. 1/4"-20 NC x 1/2"	2
17	COM'L	COTTER PIN, 1/8 x 3/4	1
16	COM'L	COTTER PIN, 3/32 x 3/4	1
15	13758A	ANCHOR, SPRING	1
14	P17337	SPRING	1
13	P19187	SPRING, THROTTLE ROD	1
12	P16611	GREASE ZERK	1
11	P10350	ROLL PIN	1
10	15549A	PEDAL STOP	1
9	15547A	LEVER PIVOT	1
8	15546A	SUPPORT BRACE	2
7	16285C	THROTTLE ROD	1
6	15544A	SLEEVE, THROTTLE ROD	1
5	16300A	SLEEVE, PIVOT ROD	1
4	15542A	U-CLAMP	2
3	16298A	PIVOT ROD	1
2	P19115	BUSHING	2
1	P17737	ACCELERATOR PEDAL	1

LULL Engineering Co., Inc. ST. PAUL, MINNESOTA 55121

DRAWN BY Jeff Daub

S/N 101-194, 197-215, 217-219

DRAWING TITLE
THROTTLE ASSEMBLY MODEL 844

WAUK.

SCALE C

DRAWING NO. 16819

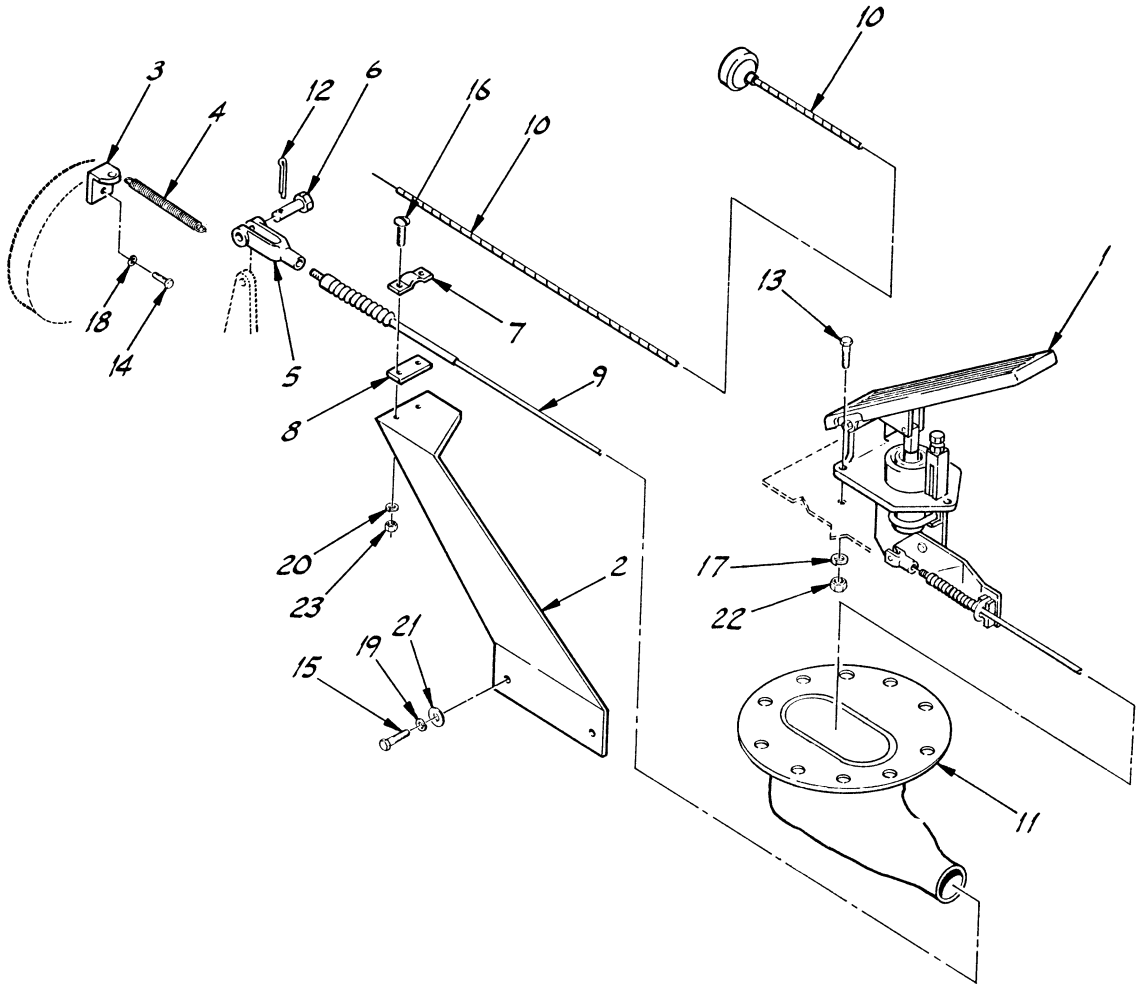

ITEM	PART NO.	DESCRIPTION	REQ.
23	COM'L	NUT, FULL #10-24	2
22	COM'L	NUT, HX 1/4"-20	3
21	COM'L	FLATWASHER, 3/8"	2
20	COM'L	LOCKWASHER, #10	2
19	COM'L	LOCKWASHER, 3/8"	2
18	COM'L	LOCKWASHER, 5/16"	1
17	COM'L	LOCKWASHER, 1/4"	3
16	COM'L	CAPSCREW, R.H. #10-24×1	2
15	COM'L	BOLT, HX 3/8"-16 NC×1"	2
14	COM'L	BOLT, HX 5/16"-18 NC×3/4"	1
13	COM'L	BOLT, HX 1/4"-20 NC×1"	3
12	COM'L	COTTER PIN, 1/16"×7/16"	1
11	P19268	BOOT GUARD	1
10	P20078	CABLE, E.S.O.	1
9	P19264	CABLE, THROTTLE	1
8	P19128	SHIM	1
7	P17678	CLAMP, CABLE	1
6	P10512	PIN, CLEVIS	1
5	P10508	CLEVIS	1
4	P17337	SPRING	1
3	13758A	ANCHOR, SPRING	1
2	16173B	CABLE SUPP'T BRKT	1
1	P19263	ACCELERATOR PEDAL	1

LULL 4/85 Engineering Co., Inc. ST. PAUL, MINNESOTA 55121

DRAWN BY J DAUB

S/N 195, 220 THRU

DRAWING TITLE
THROTTLE ASSEMBLY MODEL 844

WAUK.

SCALE C

DRAWING NO. 16819-1

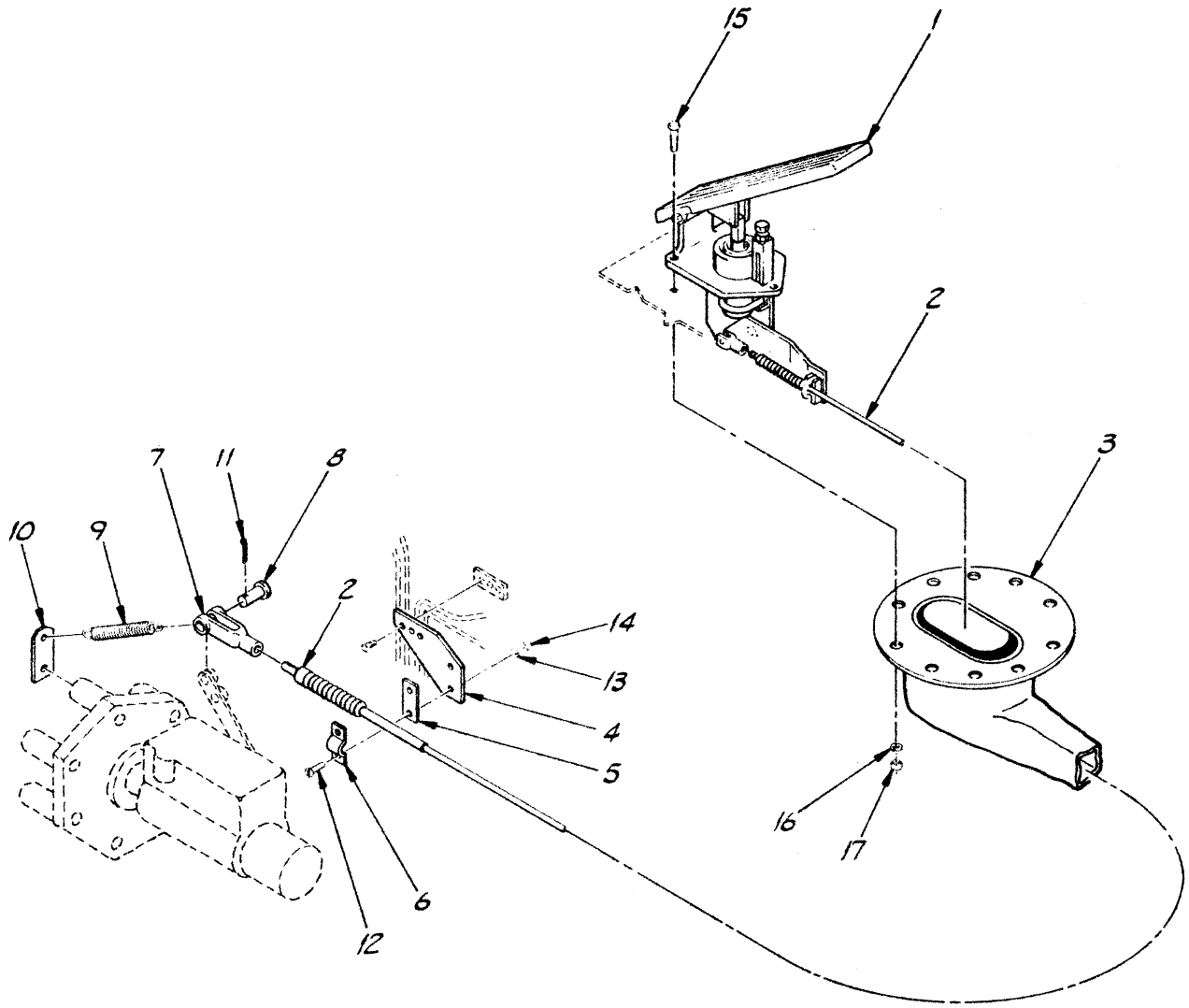

ITEM	PART NO.	DESCRIPTION	REQ.
17	COM'L	NUT, HX. 1/4"-20 NC	3
16	COM'L	LOCKWASHER, 1/4"	3
15	COM'L	BOLT, HX. 1/4"-20 NC × 1"	3
14	COM'L	NUT, #10-24 NC	2
13	COM'L	LOCKWASHER, #10	2
12	COM'L	SCREW, RD. HD. #10-24 × 1"	2
11	COM'L	COTTER PIN, 3/32" × 3/4"	1
10	17786A	SPRING ANCHOR	1
9	P21260	SPRING	1
8	P10509	CLEVIS PIN	1
7	P10508	CLEVIS	1
6	P17678	CLAMP, CABLE	1
5	P19128	SHIM	1
4	18764A	BRACKET, CABLE	1
3	P19268	BOOT GUARD	1
2	P19264	CABLE, THROTTLE	1
1	P19263	ACCELERATER PEDAL	1

LULL Engineering Co., Inc. 9/81 — ST. PAUL, MINNESOTA 55121

DRAWN BY: Jeff Dent

S/N 795 THRU

DRAWING TITLE: THROTTLE ASSEMBLY MODEL 844

DEERE

SCALE: C

DRAWING NO. 16819-2

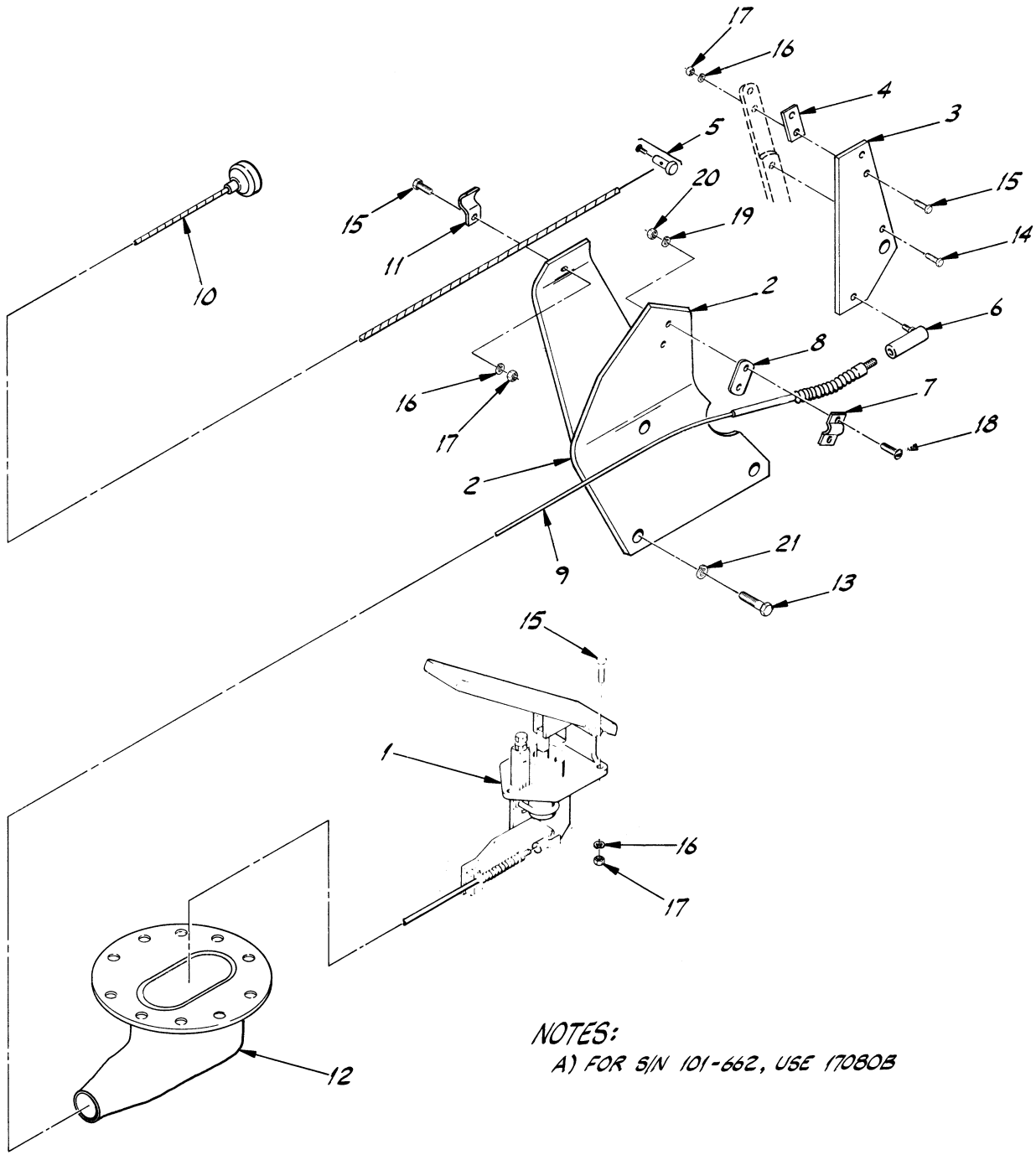

NOTES:
A) FOR S/N 101-662, USE 17080B

	ITEM	PART NO.	DESCRIPTION	REQ.
	21	COM'L	LOCKWASHER, M8	3
	20	COM'L	NUT, 10-24	2
	19	COM'L	LOCKWASHER, #10	2
	18	COM'L	CAPSCREW, RD. 10-24×1	2
	17	COM'L	NUT, HX 1/4-20 NC	6
	16	COM'L	LOCKWASHER, 1/4	6
	15	COM'L	BOLT, HX 1/4-20 NC×1"	6
	14	COM'L	BOLT, HX M6-1.0×15 LG	1
	13	COM'L	BOLT, HX M8-1.25×15 LG	3
	12	P19268	BOOT GUARD, RUBBER	1
	11	P12497	CLIP, SHUT OFF CABLE	1
	10	P20078	CABLE, SHUT OFF	1
	9	P19264	CABLE, THROTTLE	1
	8	P19128	SHIM	1
	7	P17678	CLAMP, CABLE	1
	6	P10505	BALL JOINT	1
	5	P20455	CABLE STOP	1
	4	17084A	SPACER	1
	3	17085A	THROTTLE LINK	1
A)	2	17194B	CABLE SUPP'T BRKT	1
	1	P19263	ACCELERATOR	1

LULL s/es Engineering Co., Inc.
ST. PAUL, MINNESOTA 55121

DRAWN BY: J DAUB
S/N 101 THRU

DRAWING TITLE: THROTTLE ASSEMBLY MODEL 844

DEUTZ

SCALE: C

DRAWING NO. 16820

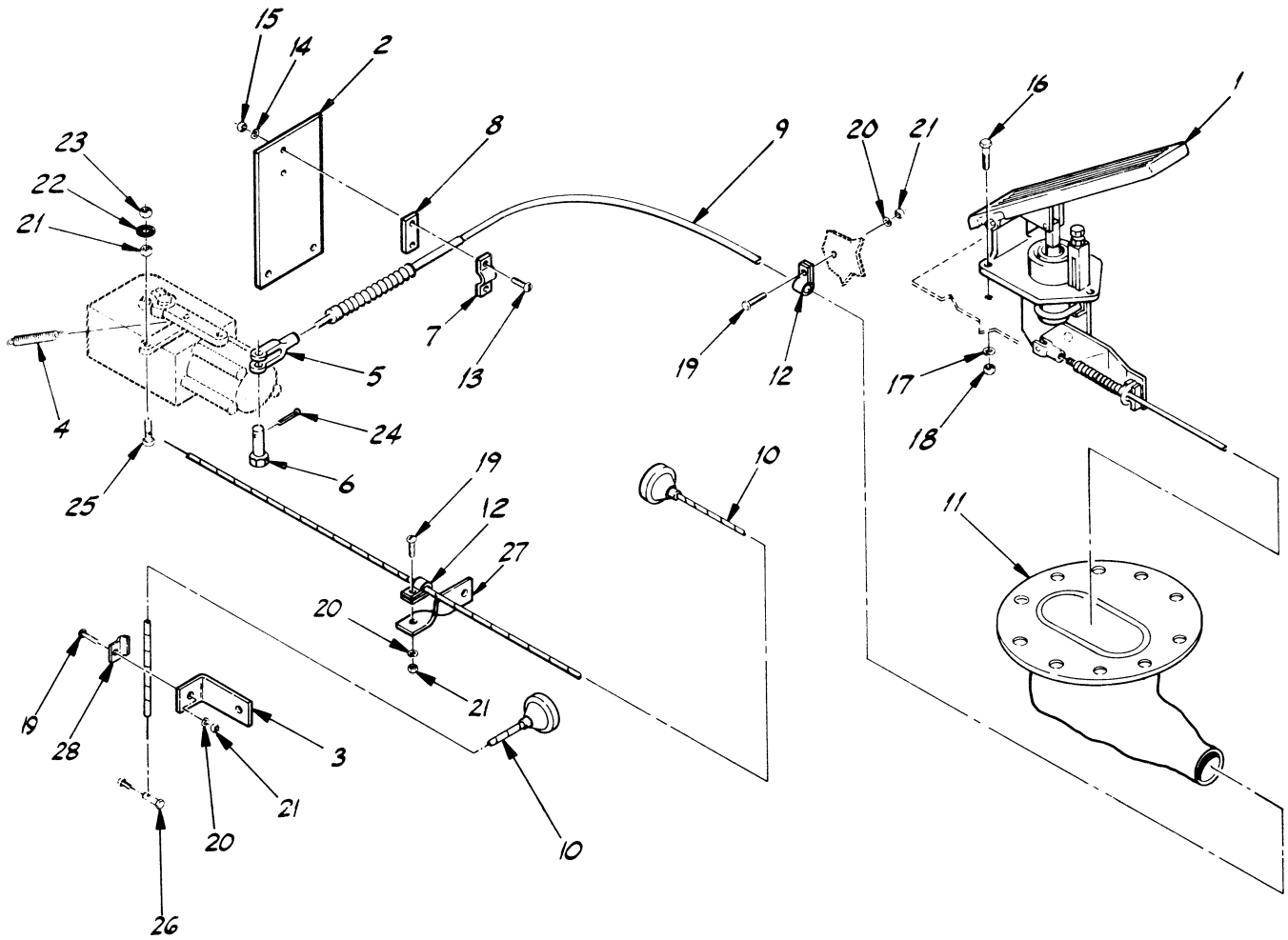

ITEM	PART NO.	DESCRIPTION	REQ.
28	P12497	CLAMP	1
27	12517A	HANGER BRACKET	1
26	P20455	CABLE STOP	1
25	16522A	PIN	1
24	COM'L	COTTER PIN, 3/32 × 3/4	1
23	COM'L	JAM NUT, HX 5/16-18	1
22	COM'L	STARWASHER, 5/16	1
21	COM'L	NUT, HX 5/16-18	3
20	COM'L	LOCKWASHER, 5/16	2
19	COM'L	BOLT, HX 5/16-18 × 1"	2
18	COM'L	NUT, HX 1/4-20	3
17	COM'L	LOCKWASHER, 1/4	3
16	COM'L	BOLT, HX 1/4-20 × 1"	3
15	COM'L	NUT, FULL 10-24	2
14	COM'L	LOCKWASHER, #10	2
13	COM'L	CAPSCREW, RD 10-24 × 1	2
12	P17554	CLAMP	2
11	P19268	RUBBER BOOT GUARD	1
10	P20078	CABLE, E.S.O.	2
9	P19264	CABLE, THROTTLE	1
8	P19128	SHIM	1
7	P17678	CLAMP, CABLE	1
6	P10040	PIN, CLEVIS	1
5	P17679	CLEVIS	1
4	P15274	SPRING	1
3	16523A	HANGER BRACKET	1
2	16506A	CABLE SUPP'T BRKT	1
1	P19263	ACCELERATOR	1

LULL Engineering Co., Inc.
ST. PAUL, MINNESOTA 55121

DRAWN BY: J DAUB

S/N 101 THRU

DRAWING TITLE: THROTTLE ASSEMBLY MODEL 844

DETROIT

SCALE: C

DRAWING NO. 16821

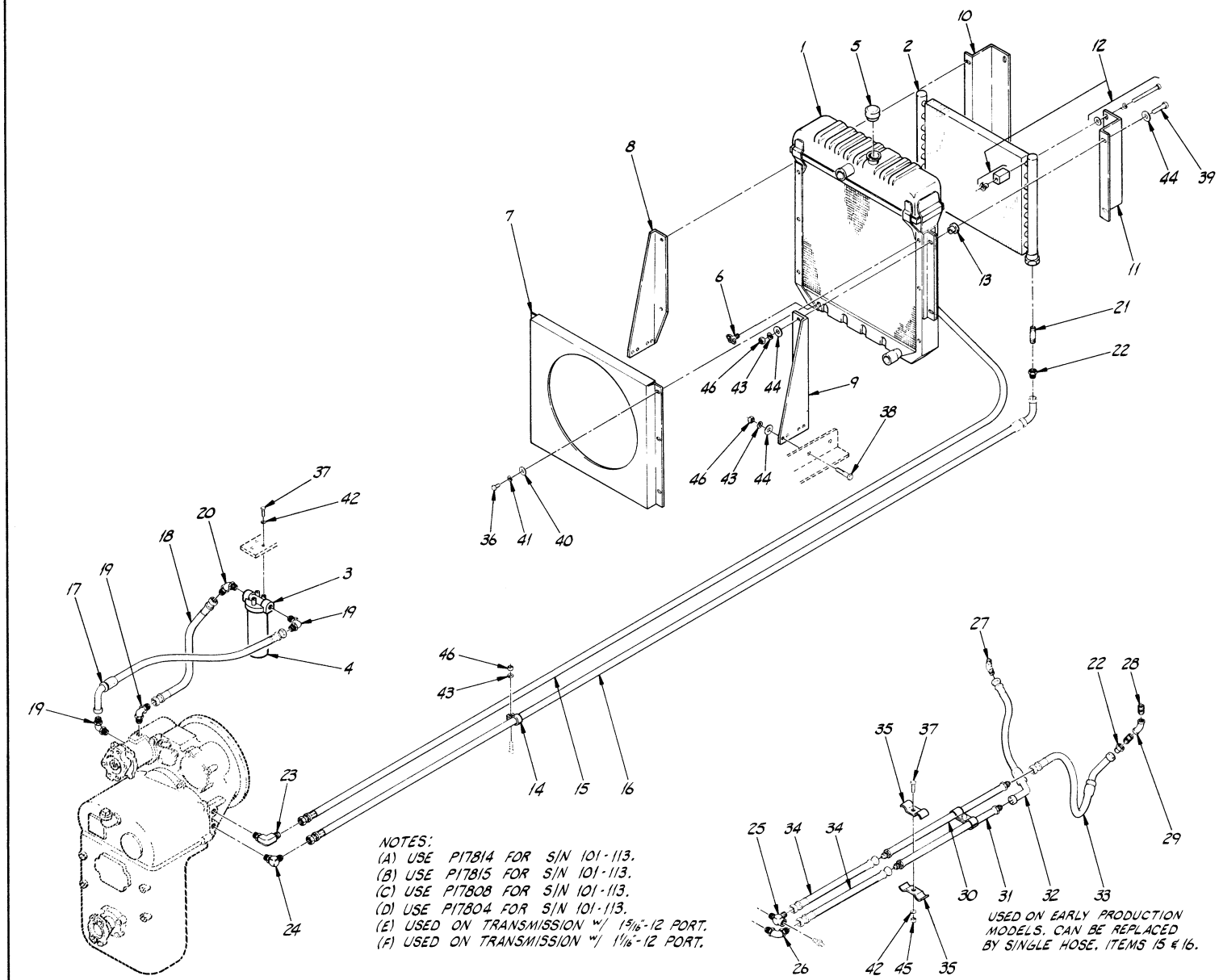

NOTES:
(A) USE P17814 FOR S/N 101-113.
(B) USE P17815 FOR S/N 101-113.
(C) USE P17808 FOR S/N 101-113.
(D) USE P17804 FOR S/N 101-113.
(E) USED ON TRANSMISSION w/ 1 5/16"-12 PORT.
(F) USED ON TRANSMISSION w/ 1 1/16"-12 PORT.

USED ON EARLY PRODUCTION MODELS. CAN BE REPLACED BY SINGLE HOSE. ITEMS 15 & 16.

	ITEM	PART NO.	DESCRIPTION	REQ.
	46	COM'L	NUT, HX. 3/8"-16 NC	8
	45	COM'L	NUT, HX. 5/16"-18 NC	2
	44	COM'L	FLATWASHER, 3/8"	12
	43	COM'L	LOCKWASHER, 3/8"	8
	42	COM'L	LOCKWASHER, 5/16"	4
	41	COM'L	LOCKWASHER, 1/4"	6
	40	COM'L	FLATWASHER, 1/4"	6
	39	COM'L	BOLT, HX. 3/8"-16 NC × 1 1/2"	4
	38	COM'L	BOLT, HX. 3/8"-16 NC × 1"	4
	37	COM'L	BOLT, HX. 5/16"-18 NC × 3/4"	5
	36	COM'L	BOLT, HX. 1/4"-20 NC × 1/2"	6
	35	6610B	CLAMP, TUBING	4
	34	P17799	HYD. HOSE, 3/4" × 14"	2
	33	P17790	HYD. HOSE, 3/4" × 16"	1
	32	P17789	HYD. HOSE, 3/4" × 23.5"	1
	31	P17812	HYD. TUBING, .75" O.D.	1
	30	P17813	HYD. TUBING, .75" O.D.	1
	29	P10209	45° ELBOW, STREET	1
	28	P15075	NIPPLE, CLOSE	2
	27	P17792	45° ELBOW	1
(F)	26	P17802	90° ELBOW, O-RING	1
(F)	25	14539A	90° ELBOW, SPECIAL	1
(E)	24	18526A	90° ELBOW, SPECIAL	1
(E)	23	P20359	90° ELBOW, O-RING	1
	22	P17791	ADAPTER	2
	21	P10891	NIPPLE	2
(D)	20	P19147	45° ELBOW, O-RING	1
(C)	19	P17802	90° ELBOW, O-RING	3
	18	P19130	HYD. HOSE, 3/4" × 23"	1
	17	P17798	HYD. HOSE, 3/4" × 29"	1
	16	P21348	HYD. HOSE, 3/4" × 50"	1
	15	P21351	HYD. HOSE, 3/4" × 65"	1
	14	P17809	CLAMP, HYD. HOSE	2
	13	P18723	RUBBER GROMMET	4
	12	P21336	MOUNTING KIT	2
	11	15539C	COOLER SUPPORT, L.H.	1
	10	15538C	COOLER SUPPORT, R.H.	1
	9	15534C	RADIATOR SUPPORT, L.H.	1
	8	15533C	RADIATOR SUPPORT, R.H.	1
	7	P17774	FAN SHROUD	1
	6	P16675	DRAIN COCK	1
	5	P13544	RADIATOR CAP	1
(B)	4	P19133	FILTER, TRANSMISSION	1
(A)	3	P19132	FILTER BASE	1
	2	P17598	TRANSMISSION COOLER	1
	1	P18055	RADIATOR	1

LULL 4/81 Engineering Co., Inc. ST. PAUL, MINNESOTA 55121

DRAWN BY Jeff Daut
DRAWING TITLE S/N 101 THRU

RADIATOR & TRANSMISSION COOLER ASSEMBLY
MODEL 844

CHRYS.
SCALE D
DRAWING NO. 16822

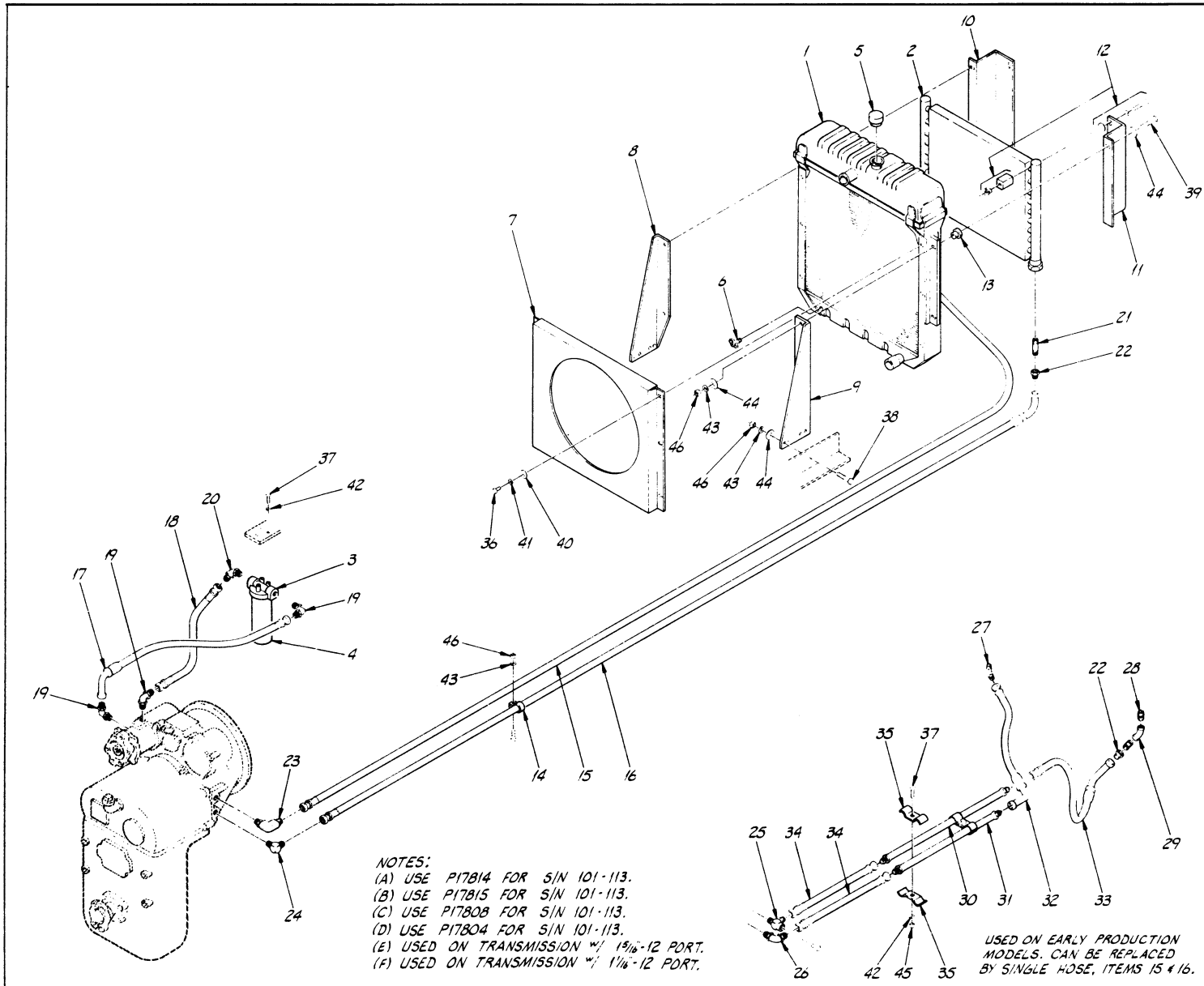

NOTES:
(A) USE P17814 FOR S/N 101-113.
(B) USE P17815 FOR S/N 101-113.
(C) USE P17808 FOR S/N 101-113.
(D) USE P17804 FOR S/N 101-113.
(E) USED ON TRANSMISSION w/ 15/16"-12 PORT.
(F) USED ON TRANSMISSION w/ 1 1/16"-12 PORT.

USED ON EARLY PRODUCTION MODELS. CAN BE REPLACED BY SINGLE HOSE, ITEMS 15 & 16.

	ITEM	PART NO	DESCRIPTION	REQ.
	46	COM'L	NUT, HX. 3/8"-16 NC	8
	45	COM'L	NUT, HX. 5/16"-18 NC	2
	44	COM'L	FLATWASHER, 3/8"	12
	43	COM'L	LOCKWASHER, 3/8"	8
	42	COM'L	LOCKWASHER, 5/16"	4
	41	COM'L	LOCKWASHER, 1/4"	6
	40	COM'L	FLATWASHER, 1/4"	6
	39	COM'L	BOLT, HX. 3/8"-16 NC x 1 1/2"	4
	38	COM'L	BOLT, HX. 3/8"-16 NC x 1"	4
	37	COM'L	BOLT, HX. 5/16"-18 NC x 3/4"	5
	36	COM'L	BOLT, HX. 1/4"-20 NC x 1/2"	6
	35	66108	CLAMP, TUBING	4
	34	P17799	HYD. HOSE, 3/4" x 14"	2
	33	P17790	HYD. HOSE, 3/4" x 16"	1
	32	P17789	HYD. HOSE, 3/4" x 23.5"	1
	31	P17812	HYD. TUBING, .75" O.D.	1
	30	P17813	HYD. TUBING, .75" O.D.	1
	29	P10209	45° ELBOW, STREET	1
	28	P15075	NIPPLE, CLOSE	2
	27	P17792	45° ELBOW	1
(F)	26	P17802	90° ELBOW, O-RING	1
(F)	25	14539A	90° ELBOW, SPECIAL	1
(E)	24	18526A	90° ELBOW, SPECIAL	1
(E)	23	P20359	90° ELBOW, O-RING	1
	22	P17791	ADAPTER	2
	21	P10891	NIPPLE	2
(D)	20	P19147	45° ELBOW, O-RING	1
(C)	19	P17802	90° ELBOW, O-RING	3
	18	P19130	HYD. HOSE, 3/4" x 23"	1
	17	P17798	HYD. HOSE, 3/4" x 29"	1
	16	P21350	HYD. HOSE, 3/4" x 56"	1
	15	P21352	HYD. HOSE, 3/4" x 68"	1
	14	P17809	CLAMP, HYD. HOSE	2
	13	P18723	RUBBER GROMMET	4
	12	P21336	MOUNTING KIT	2
	11	15539C	COOLER SUPPORT, L.H.	1
	10	15538C	COOLER SUPPORT, R.H.	1
	9	15555-2	RADIATOR SUPPORT, L.H.	1
	8	15555-1	RADIATOR SUPPORT, R.H.	1
	7	P18725	FAN SHROUD	1
	6	P16675	DRAIN COCK	1
	5	P13544	RADIATOR CAP	1
(B)	4	P19133	FILTER, TRANSMISSION	1
(A)	3	P19132	FILTER BASE	1
	2	P17598	TRANSMISSION COOLER	1
	1	P17876	RADIATOR	1

LULL Engineering Co., Inc. — ST PAUL, MINNESOTA 55121

DRAWN BY: Jeff Dent — S/N 101 THRU

DRAWING TITLE: RADIATOR & TRANSMISSION COOLER ASSEMBLY MODEL 844

WAUK.

SCALE: D

DRAWING NO. 16823

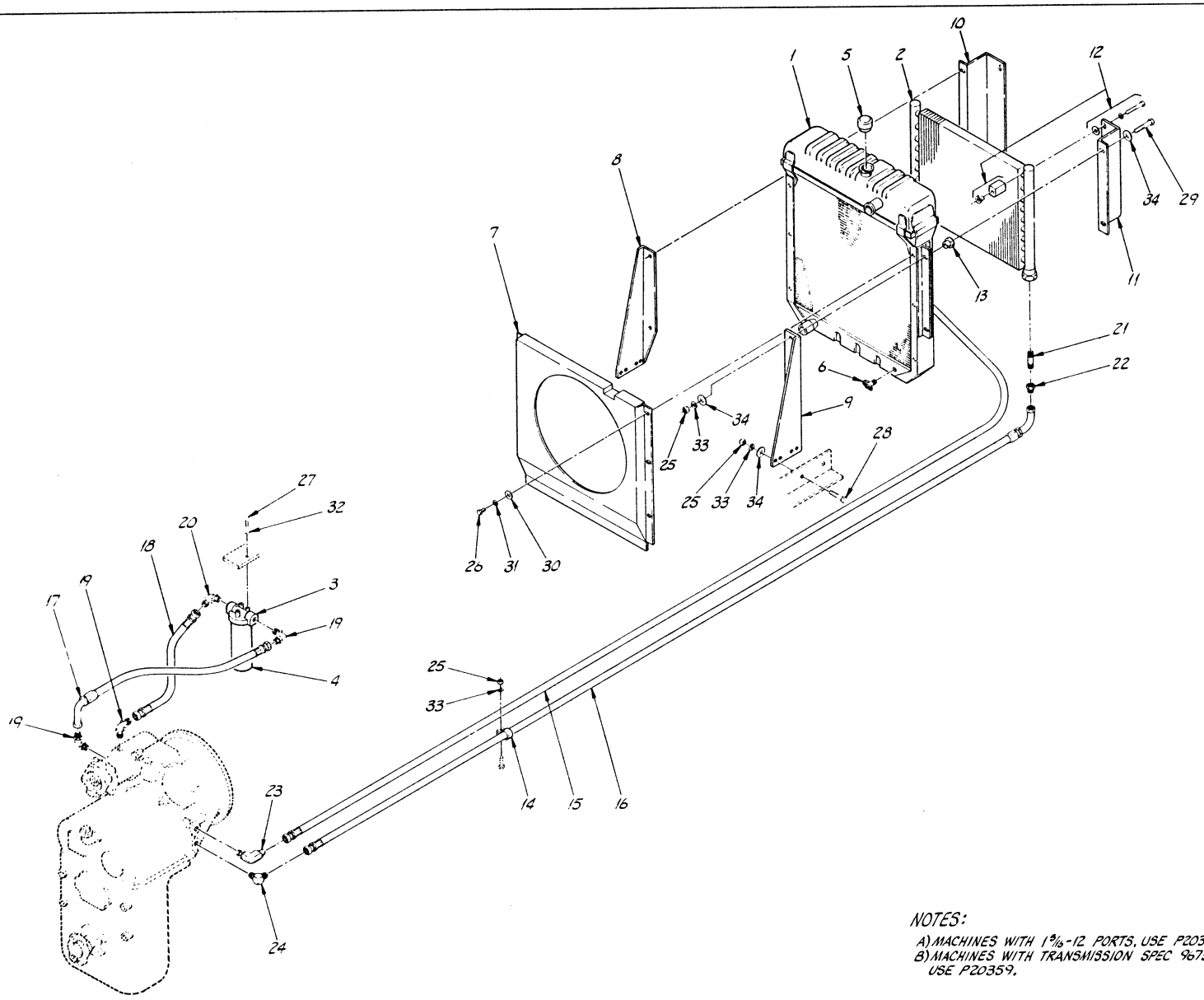

ITEM	PART NO	DESCRIPTION	REQ.
34	COM'L	FLATWASHER, 3/8"	12
33	COM'L	LOCKWASHER, 3/8"	8
32	COM'L	LOCKWASHER, 5/16"	3
31	COM'L	LOCKWASHER, 1/4"	6
30	COM'L	FLATWASHER, 1/4"	6
29	COM'L	BOLT, HX. 3/8"-16 NC x 1 1/2"	4
28	COM'L	BOLT, HX. 3/8"-16 NC x 1"	4
27	COM'L	BOLT, HX. 5/16"-18 NC x 3/4"	3
26	COM'L	BOLT, HX. 1/4"-20 NC x 1/2"	6
25	COM'L	NUT, HX. 3/8"-16 NC	8
B) 24	18526A	90° ELBOW, SPECIAL	1
23	P20359	90° ELBOW, O-RING	1
22	P17791	ADAPTER	2
21	P10891	NIPPLE	2
A) 20	P19147	45° ELBOW, O-RING	1
A) 19	P17802	90° ELBOW, O-RING	3
18	P19130	HYD. HOSE, 3/4" x 23"	1
17	P17798	HYD. HOSE, 3/4" x 29"	1
16	P21921	HYD. HOSE, 3/4" x 48"	1
15	P21922	HYD. HOSE, 3/4" x 67"	1
14	P17809	CLAMP, HYD. HOSE	2
13	P18723	RUBBER GROMMET	4
12	P21336	MOUNTING KIT	2
11	15539C	COOLER SUPPORT, L.H.	1
10	15538C	COOLER SUPPORT, R.H.	1
9	15555-2	RADIATOR SUPPORT, L.H.	1
8	15555-1	RADIATOR SUPPORT, R.H.	1
7	P21986	FAN SHROUD	1
6	P16675	DRAIN COCK	1
5	P13544	RADIATOR CAP	1
4	P19133	FILTER, TRANSMISSION	1
3	P19132	FILTER BASE w/ FILTER	1
2	P17598	TRANSMISSION COOLER	1
1	P21989	RADIATOR	1

NOTES:

A) MACHINES WITH 1 5/16-12 PORTS, USE P20359
B) MACHINES WITH TRANSMISSION SPEC 9673, USE P20359.

LULL Engineering Co., Inc.
ST PAUL, MINNESOTA 55121

DRAWN BY: Jeff Dent
S/N 795 - 1021

DRAWING TITLE: RADIATOR & TRANSMISSION COOLER ASSEMBLY MODEL 844

DEERE

SCALE: D

DRAWING NO: 16823-1

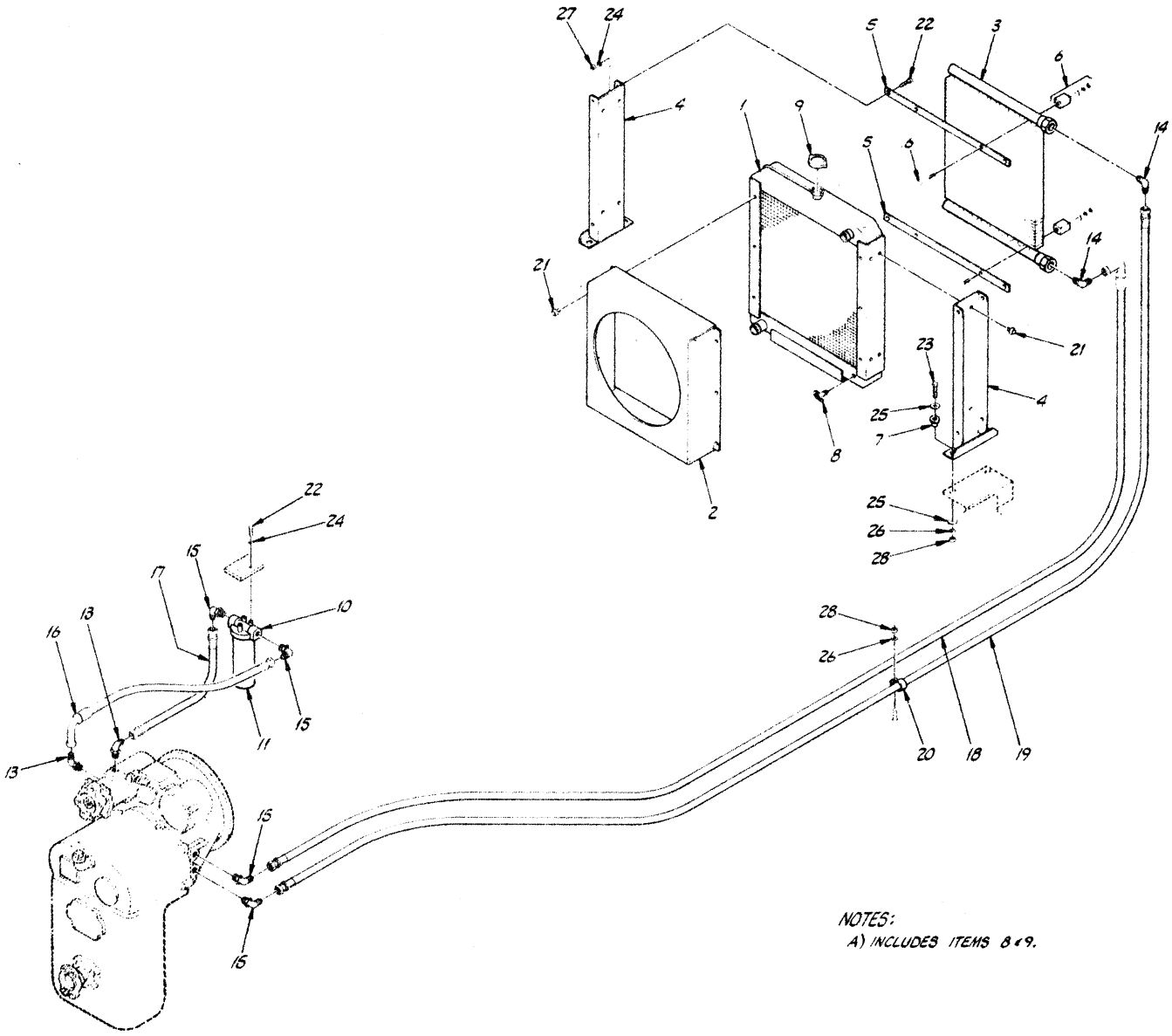

NOTES:
A) INCLUDES ITEMS 8 & 9.

ITEM	PART NO	DESCRIPTION	REQ
28	COM'L	NUT, HX. 3/8"-16	5
27	COM'L	NUT, HX. 5/16"-18	4
26	COM'L	LOCKWASHER, 3/8"	5
25	COM'L	FLATWASHER, 3/8"	8
24	COM'L	LOCKWASHER, 5/16"	7
23	COM'L	BOLT, HX. 3/8"-16 x 1 1/4"	4
22	COM'L	BOLT, HX. 5/16"-18 x 3/4"	7
21	P24307	BOLT, SELF-LOCK, 5/16"-18 x 1/2"	14
20	P17809	CLAMP, HYD. HOSE	3
19	P21953	HYD. HOSE, .75" x 79"	1
18	P21301	HYD. HOSE, .75" x 60"	1
17	P19130	HYD. HOSE, .75" x 23"	1
16	P17798	HYD. HOSE, .75" x 29"	1
15	P20359	90° ELBOW, O-RING	3
14	P17808	90° ELBOW	2
13	P17802	90° ELBOW, O-RING	2
12			
11	P19133	FILTER, TRANSMISSION	-
10	P19132	FILTER BASE w/ FILTER	-
9	P25365	CAP, RADIATOR	-
8	P16675	DRAIN COCK	-
7	P18723	RUBBER GROMMET	4
6	P21336	RUBBER BLOCK KIT	2
5	184158	MOUNT BAR, COOLER	2
4	187518	SUPPORT BRACKET	2
3	P17598	TRANSMISSION COOLER	1
2	P24731	FAN SHROUD	1
1	P24296	RADIATOR	1

(A)

LULL Engineering Co., Inc. — ST. PAUL, MINNESOTA 55171

DRAWN BY: Jeff Nash

S/N 1022 THRU

DRAWING TITLE: RADIATOR & TRANSMISSION COOLER ASSEMBLY MODEL 844

DEERE

SCALE: D

DRAWING NO. 16823-2

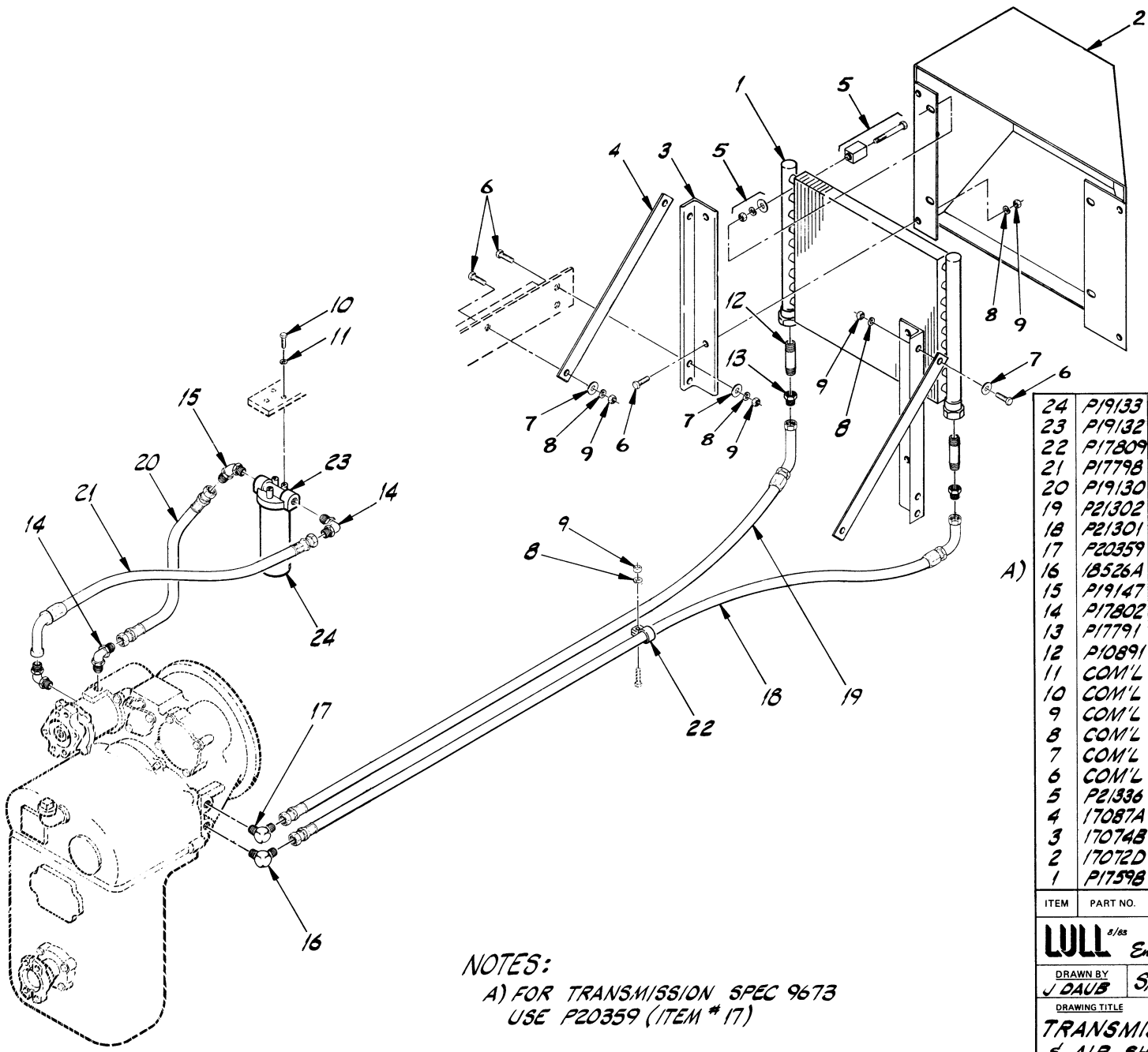

ITEM	PART NO.	DESCRIPTION	REQ.
24	P19133	FILTER	1
23	P19132	FILTER BASE	1
22	P17809	HOSE CLAMP	2
21	P17798	HYD HOSE .75" x 29"	1
20	P19130	HYD HOSE .75" x 23"	1
19	P21302	HYD HOSE .75" x 70"	1
18	P21301	HYD HOSE .75" x 60"	1
17	P20359	ELBOW, 90°	1
A) 16	18526A	ELBOW, 90°, SPECIAL	1
15	P19147	ELBOW, 45°	1
14	P17802	ELBOW, 90°	3
13	P17791	ADAPTER	2
12	P10891	NIPPLE	2
11	COM'L	LOCKWASHER, 5/16	3
10	COM'L	BOLT, HX. 5/16-18 NC x 3/4	3
9	COM'L	NUT, HX. 3/8-16 NC	13
8	COM'L	LOCKWASHER, 3/8	13
7	COM'L	FLATWASHER, 3/8	8
6	COM'L	BOLT, HX. 3/8-16 NC x 1 1/4	12
5	P21336	MOUNTING KIT	2
4	17087A	CROSS SUPPORT	2
3	17074B	UPRIGHT SUPPORT	2
2	17072D	SHROUD	1
1	P17598	TRANSMISSION COOLER	1

LULL Engineering Co., Inc. — ST. PAUL, MINNESOTA 55121

DRAWN BY: J DAUB — S/N 101 THRU

DRAWING TITLE: TRANSMISSION COOLER & AIR SHROUD ASS'Y MODEL 844

DEUTZ

SCALE: C

DRAWING NO. 16824

NOTES:

A) FOR TRANSMISSION SPEC 9673 USE P20359 (ITEM # 17)

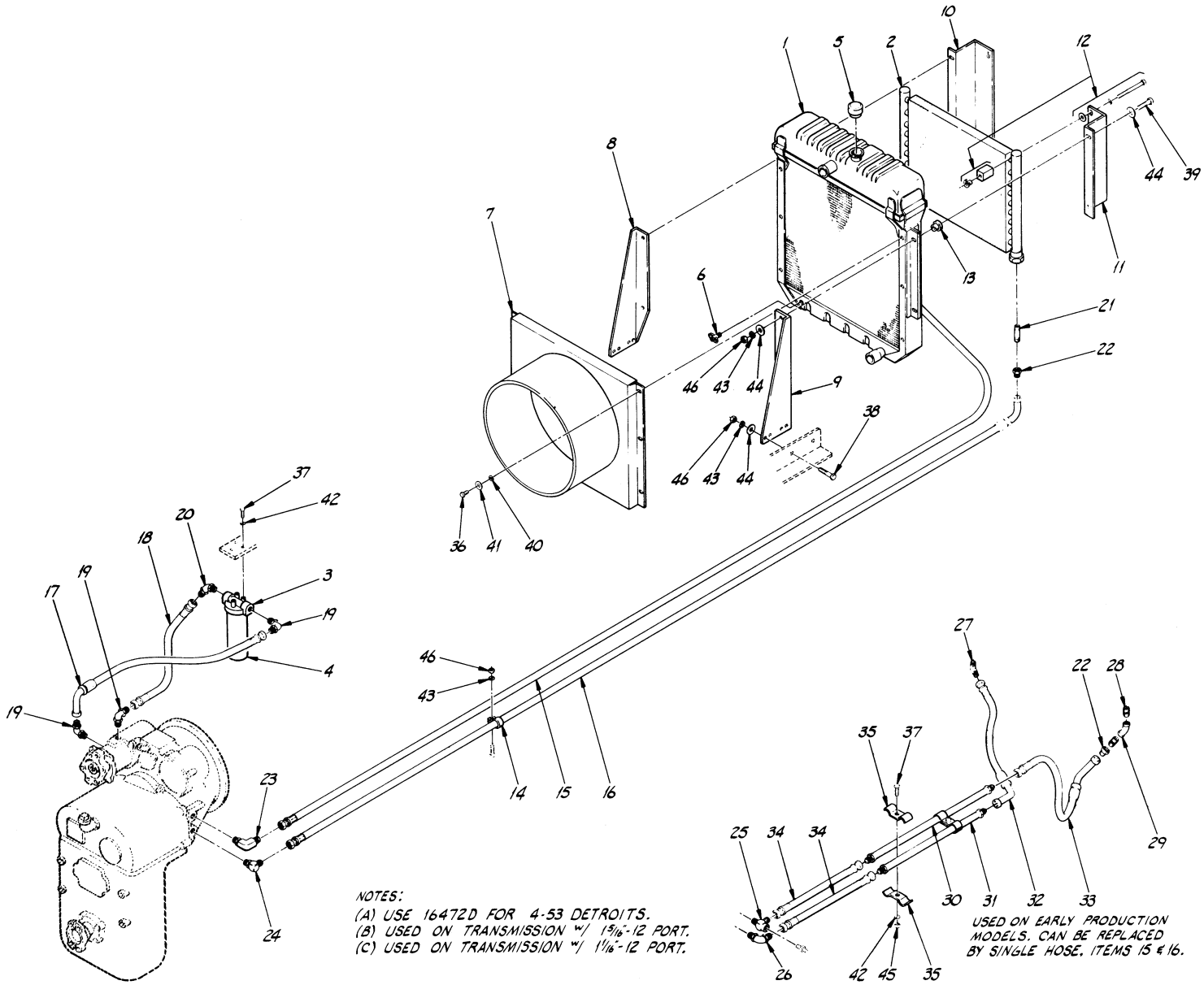

NOTES:
(A) USE 16472D FOR 4-53 DETROITS.
(B) USED ON TRANSMISSION W/ 1 5/16"-12 PORT.
(C) USED ON TRANSMISSION W/ 1 1/16"-12 PORT.

	ITEM	PART NO.	DESCRIPTION	REQ.
	46	COM'L	NUT, HX. 3/8"-16 NC	8
	45	COM'L	NUT, HX. 5/16"-18 NC	2
	44	COM'L	FLATWASHER, 3/8"	12
	43	COM'L	LOCKWASHER, 3/8"	8
	42	COM'L	LOCKWASHER, 5/16"	4
	41	COM'L	LOCKWASHER, 1/4"	6
	40	COM'L	FLATWASHER, 1/4"	6
	39	COM'L	BOLT, HX. 3/8"-16 NC × 1 1/2"	4
	38	COM'L	BOLT, HX. 3/8"-16 NC × 1"	4
	37	COM'L	BOLT, HX. 5/16"-18 NC × 3/4"	5
	36	COM'L	BOLT, HX. 1/4"-20 NC × 1/2"	6
	35	66108	CLAMP, TUBING	4
	34	P17799	HYD. HOSE, 3/4" × 14"	2
	33	P17790	HYD. HOSE, 3/4" × 16"	1
	32	P17789	HYD. HOSE, 3/4" × 23.5"	1
	31	P17812	HYD. TUBING, .75" O.D.	1
	30	P17813	HYD. TUBING, .75" O.D.	1
	29	P10209	45° ELBOW, STREET	1
	28	P15075	NIPPLE, CLOSE	2
	27	P17792	45° ELBOW	1
(C)	26	P17802	90° ELBOW, O-RING	1
(C)	25	14539A	90° ELBOW, SPECIAL	1
(B)	24	18526A	90° ELBOW, SPECIAL	1
(B)	23	P20359	90° ELBOW, O-RING	1
	22	P17791	ADAPTER	2
	21	P10891	NIPPLE	2
	20	P19147	45° ELBOW, O-RING	1
	19	P17802	90° ELBOW, O-RING	3
	18	P19130	HYD. HOSE, 3/4" × 23"	1
	17	P17798	HYD. HOSE, 3/4" × 29"	1
	16	P21350	HYD. HOSE, 3/4" × 56"	1
	15	P21352	HYD. HOSE, 3/4" × 68"	1
	14	P17809	CLAMP, HYD. HOSE	2
	13	P18723	RUBBER GROMMET	4
	12	P21336	MOUNTING KIT	2
	11	15539C	COOLER SUPPORT, L.H.	1
	10	15538C	COOLER SUPPORT, R.H.	1
	9	15555-2	RADIATOR SUPPORT, L.H.	1
	8	15555-1	RADIATOR SUPPORT, R.H.	1
(A)	7	16559D	FAN SHROUD	1
	6	P16675	DRAIN COCK	1
	5	P13544	RADIATOR CAP	1
	4	P19133	FILTER, TRANSMISSION	1
	3	P19132	FILTER BASE	1
	2	P17598	TRANSMISSION COOLER	1
	1	P19277	RADIATOR	1

LULL Engineering Co., Inc. 4181 ST. PAUL, MINNESOTA 55121

DRAWN BY: Jeff Clark

DRAWING TITLE: RADIATOR & TRANSMISSION COOLER ASSEMBLY MODEL 844

S/N 101 THRU

DETROIT

SCALE: D

DRAWING NO. 16825

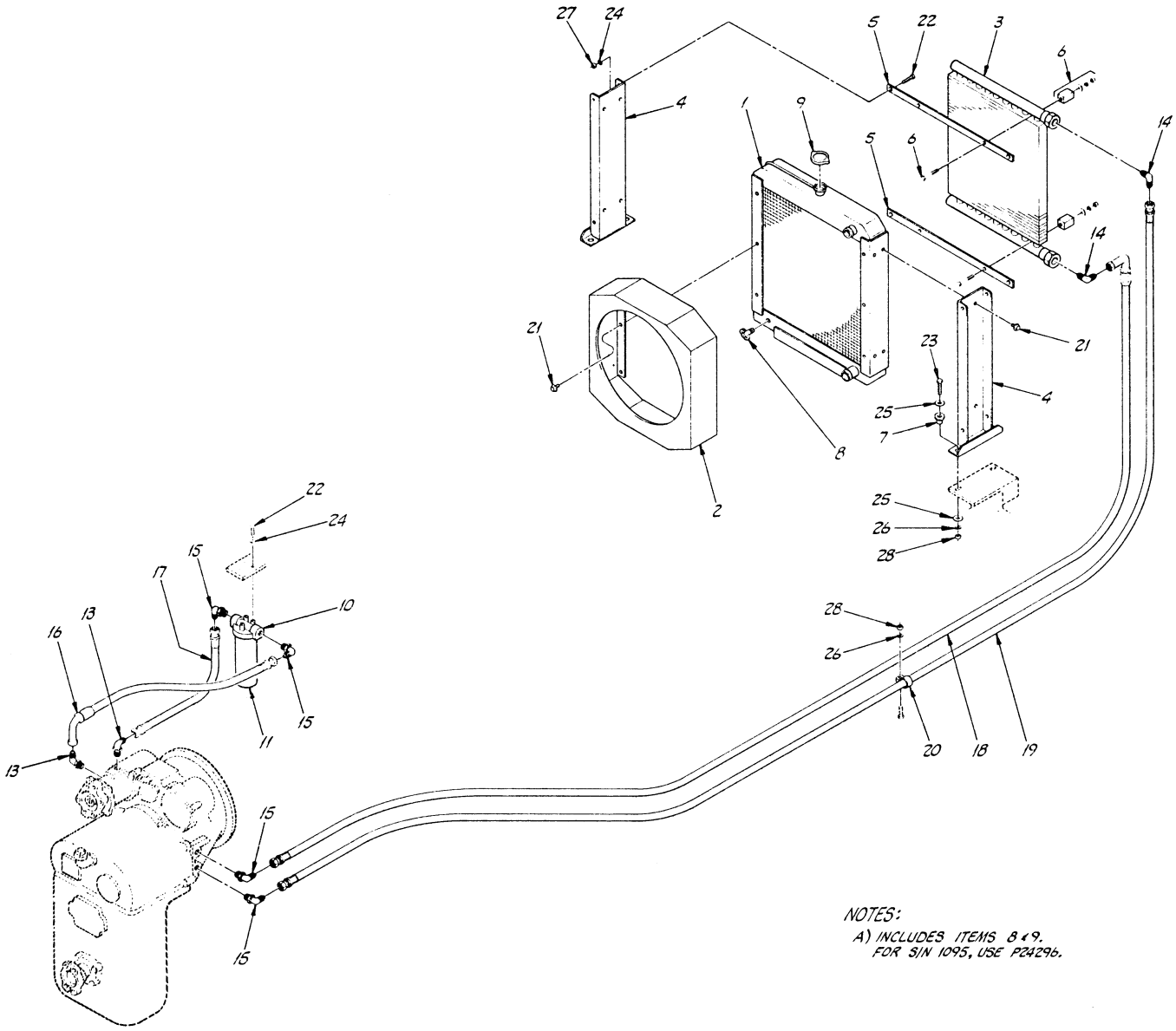

NOTES:

A) INCLUDES ITEMS 8 & 9.
FOR S/N 1095, USE P24296.

ITEM	PART NO.	DESCRIPTION	REQ.
28	COM'L	NUT, HX. 3/8"-16	5
27	COM'L	NUT, HX. 5/16"-18	4
26	COM'L	LOCKWASHER, 3/8"	5
25	COM'L	FLATWASHER, 3/8"	8
24	COM'L	LOCKWASHER, 5/16"	7
23	COM'L	BOLT, HX. 3/8"-16 x 1 1/4"	4
22	COM'L	BOLT, HX. 5/16"-18 x 3/4"	7
21	P24307	BOLT, SELF-LOCK. 5/16"-18 x 1/2"	14
20	P17809	CLAMP, HYD. HOSE	3
19	P21953	HYD. HOSE, .75" x 79"	1
18	P21301	HYD. HOSE, .75" x 60"	1
17	P19130	HYD. HOSE, .75" x 23"	1
16	P17798	HYD. HOSE, .75" x 29"	1
15	P20359	90° ELBOW, O-RING	3
14	P17808	90° ELBOW	2
13	P17802	90° ELBOW, O-RING	2
12			
11	P19133	FILTER, TRANSMISSION	-
10	P19132	FILTER BASE w/ FILTER	-
9	P25365	CAP, RADIATOR	-
8	P16675	DRAIN COCK	-
7	P18723	RUBBER GROMMET	4
6	P21336	RUBBER BLOCK KIT	2
5	184158	MOUNT BAR, COOLER	2
4	187518	SUPPORT BRACKET	2
3	P17598	TRANSMISSION COOLER	1
2	P24939	FAN SHROUD	1
A) 1	215608	RADIATOR	1

LULL Engineering Co., Inc. — ST. PAUL MINNESOTA 55121

DRAWN BY: Jeff Reed — S/N 1095 THRU

DRAWING TITLE: RADIATOR & TRANSMISSION COOLER ASSEMBLY MODEL 844

DETROIT

SCALE: D

DRAWING NO. 16B25-1

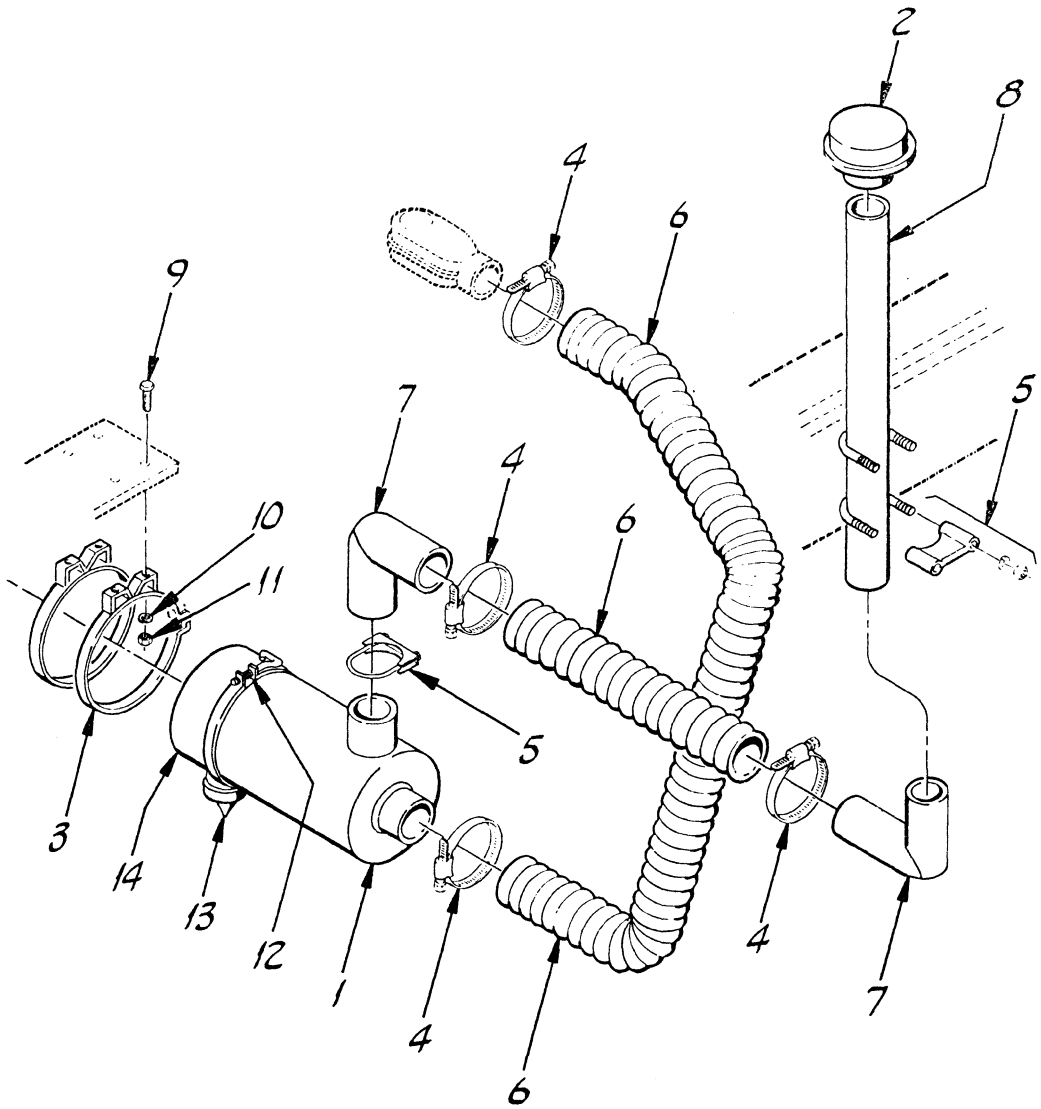

NOTES:

A) ITEM 1 INCLUDES ITEMS 12 THRU 17.
B) GIVE LENGTH REQ. WHEN ORDERING.
C) NOT ILLUSTRATED.

	ITEM	PART NO.	DESCRIPTION	REQ.
	REF	P19742	PRE-CLEANER (OPTION)	-
(C)	17	P17276	FILTER ELEMENT	-
(C)	16	P21721	BAFFLE	-
(C)	15	P18169	THUMB SCREW	-
	14	P19728	VACUATOR CUP	-
	13	P20342	VACUATOR VALVE	-
	12	P20905	CLAMP, AIR CLEANER	-
	11	COM'L	NUT, HX. 3/8"-16	4
	10	COM'L	LOCKWASHER, 3/8"	4
	9	COM'L	BOLT, HX. 3/8"-16 × 1"	4
	8	18347-13	STACK TUBE	1
	7	13458C	90° ELBOW	2
(B)	6	P18037	FLEX HOSE	A/R
	5	P17169	TUBE CLAMP	4
	4	P10553	HOSE CLAMP	4
	3	P17137	MOUNTING BAND	2
	2	P17136	RAIN CAP	1
(A)	1	P17135	AIR CLEANER	1

LULL 5/65 Engineering Co., Inc.
ST. PAUL, MINNESOTA 55121

DRAWN BY Jeff Paul

S/N 101 THRU

DRAWING TITLE
AIR CLEANER ASSEMBLY
MODEL 844

CHRYSLER

SCALE B

DRAWING NO. 16826

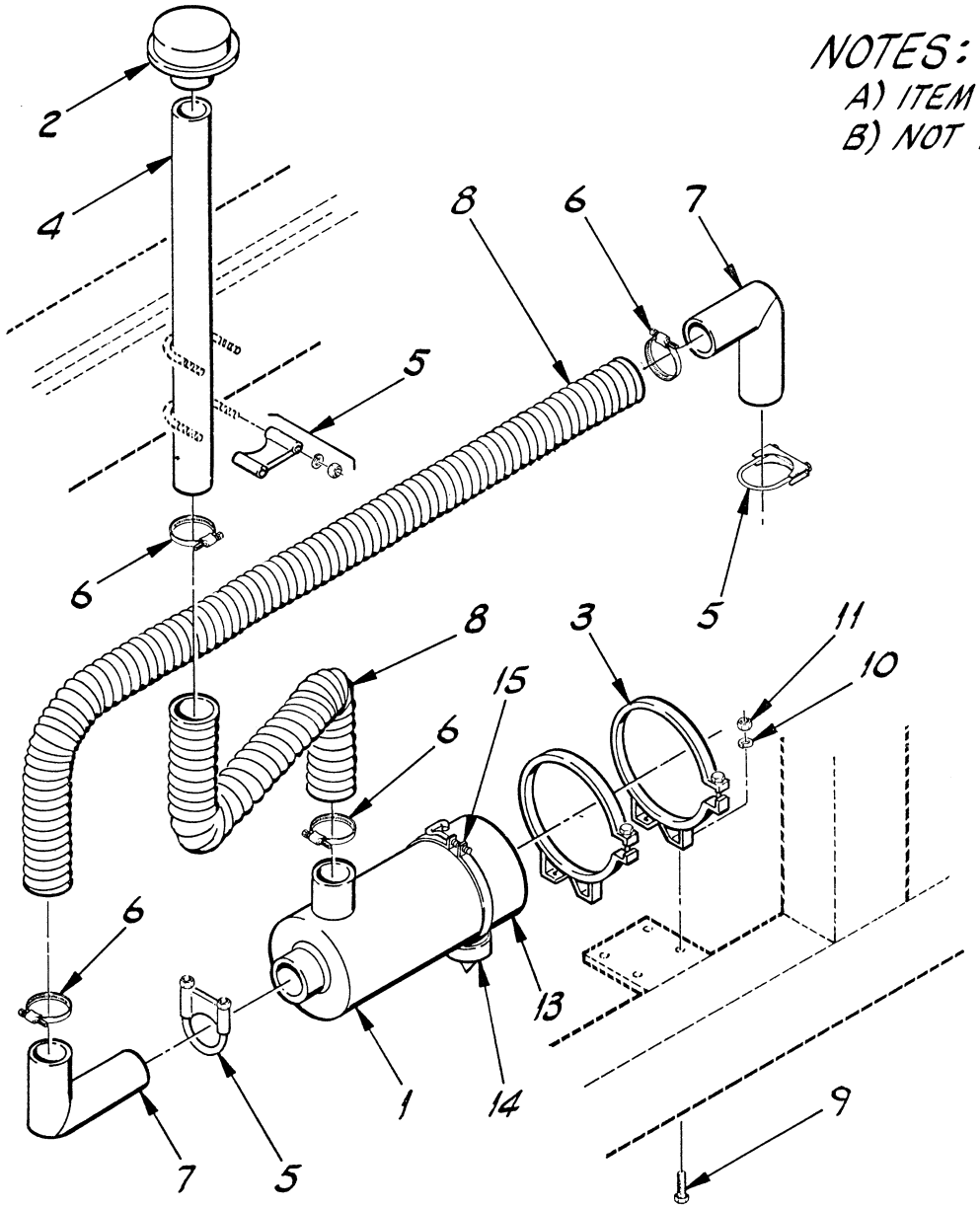

NOTES:

A) ITEM 1 INCLUDES ITEMS 13 THRU 18.

B) NOT ILLUSTRATED.

	ITEM	PART NO.	DESCRIPTION	REQ.
	REF	P19742	PRE-CLEANER (OPTION)	-
(B)	18	P17276	FILTER ELEMENT	-
(B)	17	P18169	THUMB SCREW	-
(B)	16	P21721	BAFFLE	-
	15	P20905	CLAMP, AIR CLEANER	-
	14	P20342	VACUATOR VALVE	-
	13	P19728	VACUATOR CUP	-
	12			
	11	COM'L	NUT, HX. 3/8"-16	4
	10	COM'L	LOCKWASHER, 3/8"	4
	9	COM'L	BOLT, HX. 3/8"-16 × 1"	4
	8	P18037	HOSE, FLEX	A/R
	7	13458C	90° ELBOW	2
	6	P10553	HOSE CLAMP	4
	5	P17169	MUFFLER CLAMP	4
	4	18347-13	AIR STACK	1
	3	P17137	MOUNTING BAND	2
	2	P17136	CAP, RAIN	1
(A)	1	P17135	AIR CLEANER	1

LULL 5/85 Engineering Co., Inc.
ST. PAUL, MINNESOTA 55121

DRAWN BY: J DAUB

S/N 101 - 557

DRAWING TITLE: AIR CLEANER ASSEMBLY MODEL 844

WAUKESHA

SCALE: B

DRAWING NO. 16827

NOTES:

A) ITEM 1 INCLUDES ITEMS 15 THRU 20.

B) NOT ILLUSTRATED.

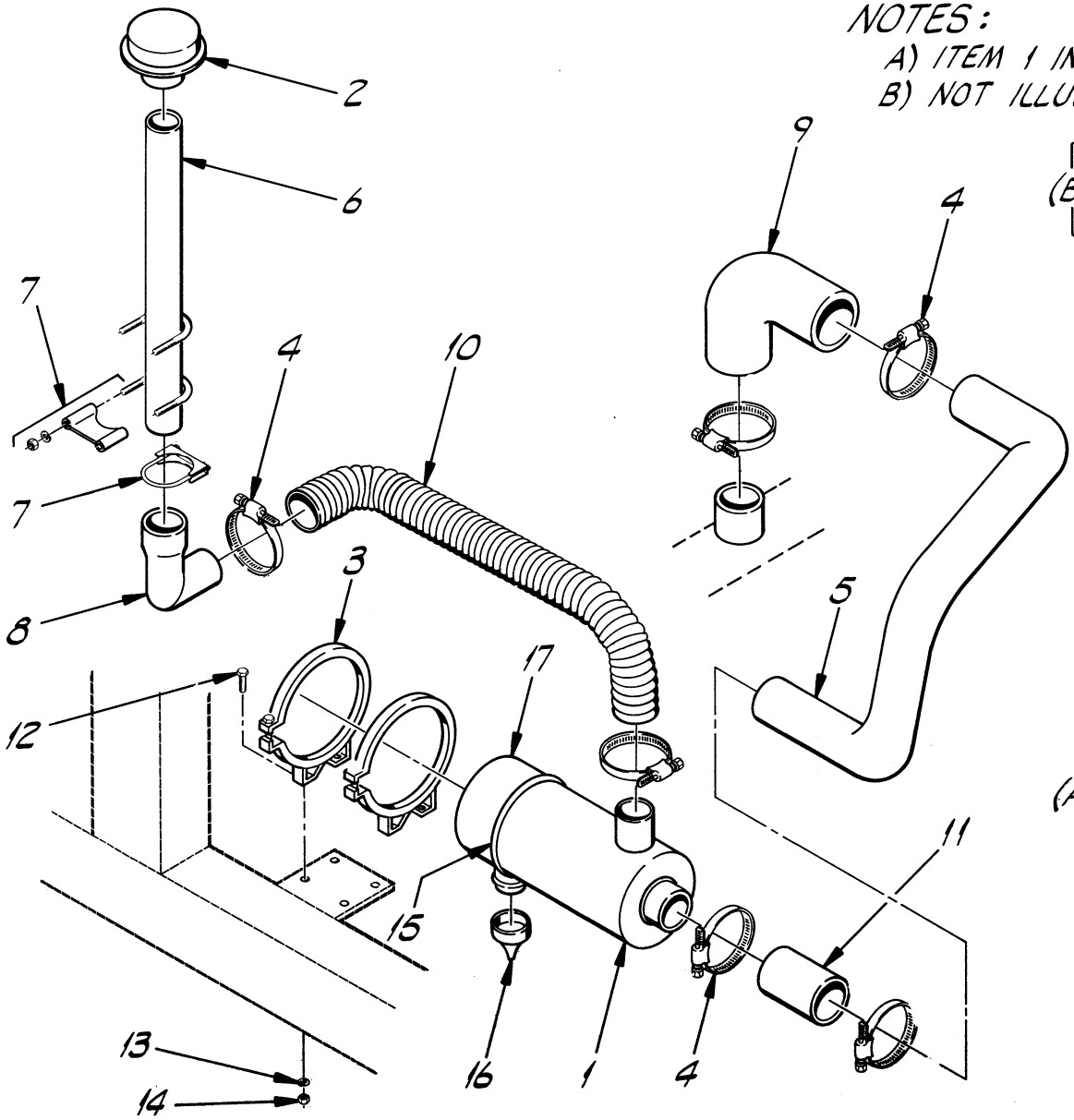

	ITEM	PART NO.	DESCRIPTION	REQ.
	REF	P19742	PRE-CLEANER (OPTION)	-
(B)	20	P17276	FILTER ELEMENT	-
(B)	19	P21721	BAFFLE	-
(B)	18	P18169	THUMB SCREW	-
	17	P19728	VACUATOR CUP	-
	16	P20342	VACUATOR VALVE	-
	15	P20905	CLAMP, AIR CLEANER	-
	14	COM'L	NUT, HX. 3/8"-16	4
	13	COM'L	LOCKWASHER, 3/8"	4
	12	COM'L	BOLT, HX. 3/8"-16 x 1"	4
	11	P20475	TUBE ADAPTOR	1
	10	P18037	FLEXIBLE HOSE	A/R
	9	P20854	90° ELBOW, RUBBER	1
	8	13458C	90° ELBOW, METAL	1
	7	P17169	TUBE CLAMP	3
	6	18347-13	AIR STACK TUBE	1
	5	P20832	AIR INTAKE TUBE	1
	4	P10553	HOSE CLAMP	6
	3	P17137	MOUNTING BAND	2
	2	P17136	RAIN CAP	1
(A)	1	P17135	AIR CLEANER	1

LULL Engineering Co., Inc. — ST. PAUL, MINNESOTA 55121

DRAWN BY: Jeff Paul

S/N 558 THRU

DRAWING TITLE: AIR CLEANER ASSEMBLY MODEL 844

WAUKESHA

SCALE: B

DRAWING NO. 16827-1

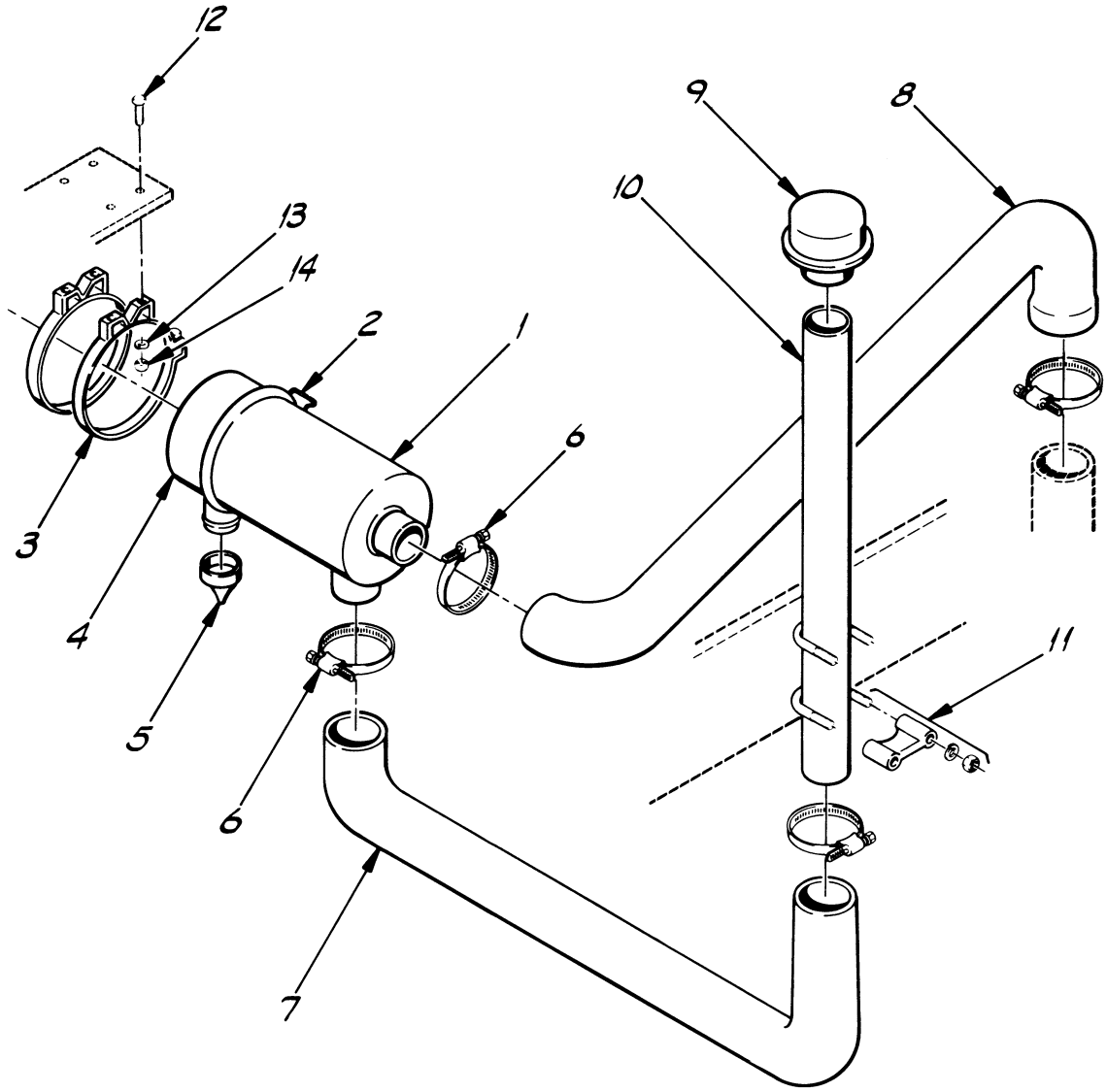

ITEM	PART NO.	DESCRIPTION	REQ.
REF	P12179	FILTER ELEMENT	1
14	COM'L	NUT, HX. 3/8"-16 NC	4
13	COM'L	LOCKWASHER, 3/8"	4
12	COM'L	BOLT, HX. 3/8"-16 NC×1	4
11	P12169	MUFFLER CLAMP	2
10	18347-14	STACK TUBE	1
9	P12164	RAIN CAP	1
8	P21792	INTAKE HOSE	1
7	P21791	INTAKE HOSE	1
6	P10601	HOSE CLAMP	4
5	P20342	VACUATOR VALVE	1
4	P19727	VACUATOR CUP	1
3	P12165	MOUNTING BAND	2
2	P20499	CLAMP	1
1	P12163	AIR CLEANER, COMPLETE	1

LULL 4/85 Engineering Co., Inc.
ST. PAUL, MINNESOTA 55121

DRAWN BY Jeff Daub

S/N 795 - 922

DRAWING TITLE
AIR CLEANER ASSEMBLY
MODEL 844

DEERE

SCALE B

DRAWING NO. 16827-2

NOTES:
A) ITEM 1 INCLUDES ITEMS 11, 15 THRU 20

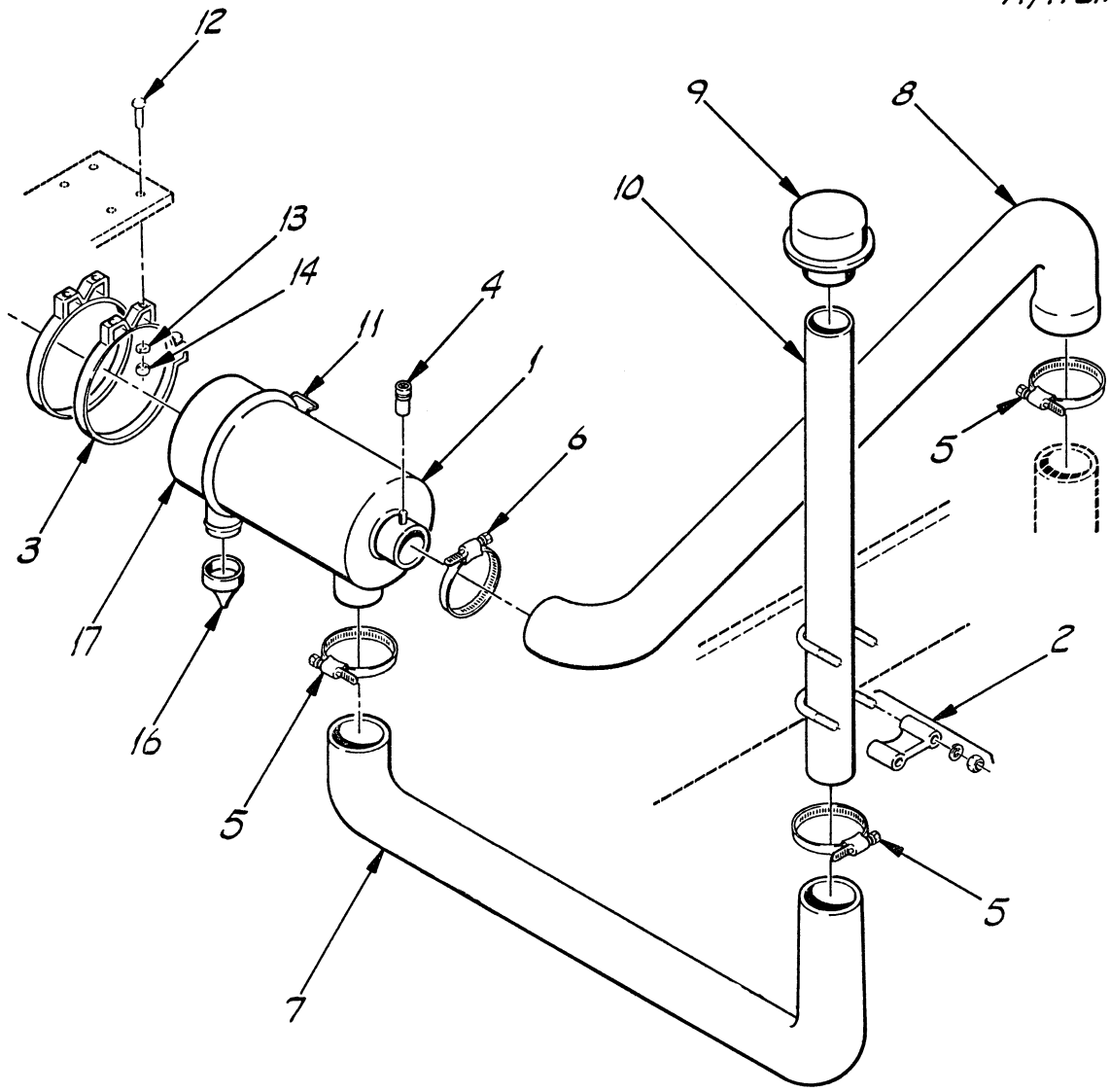

ITEM	PART NO.	DESCRIPTION	REQ.
20	P21499	FILTER ELEMENT, SAFETY	1
19	P21498	FILTER ELEMENT, PRIMARY	1
18	P20076	BAFFLE	1
17	P19727	VACUATOR CUP	1
16	P21497	VACUATOR VALVE	1
15	P21496	WING NUT, w/ GASKET	1
14	COM'L	NUT, HX. 3/8"-16 NC	4
13	COM'L	LOCKWASHER, 3/8"	4
12	COM'L	BOLT, HX. 3/8"-16 NC×1	4
11	P20499	CLAMP	1
10	18347-13	STACK TUBE	1
9	P17136	RAIN CAP	1
8	P21509	INTAKE HOSE	1
7	P21508	INTAKE HOSE	1
6	P10601	HOSE CLAMP	1
5	P10553	HOSE CLAMP	3
4	P21485	SERVICE INDICATOR KIT	1
3	P12165	MOUNTING BAND	2
2	P17169	CLAMP	2
1	P21483	AIR CLEANER	1

A)

LULL Engineering Co., Inc. 1/83
ST. PAUL, MINNESOTA 55121

DRAWN BY Jeff Daul

S/N 923 THRU

DRAWING TITLE
AIR CLEANER ASSEMBLY
MODEL 844

DEERE

SCALE B

DRAWING NO. 16827-3

NOTE: WHEN RED SIGNAL LOCKS INTO FULL VIEW, CHANGE AIR CLEANER FILTER AND RESET SERVICE INDICATOR.

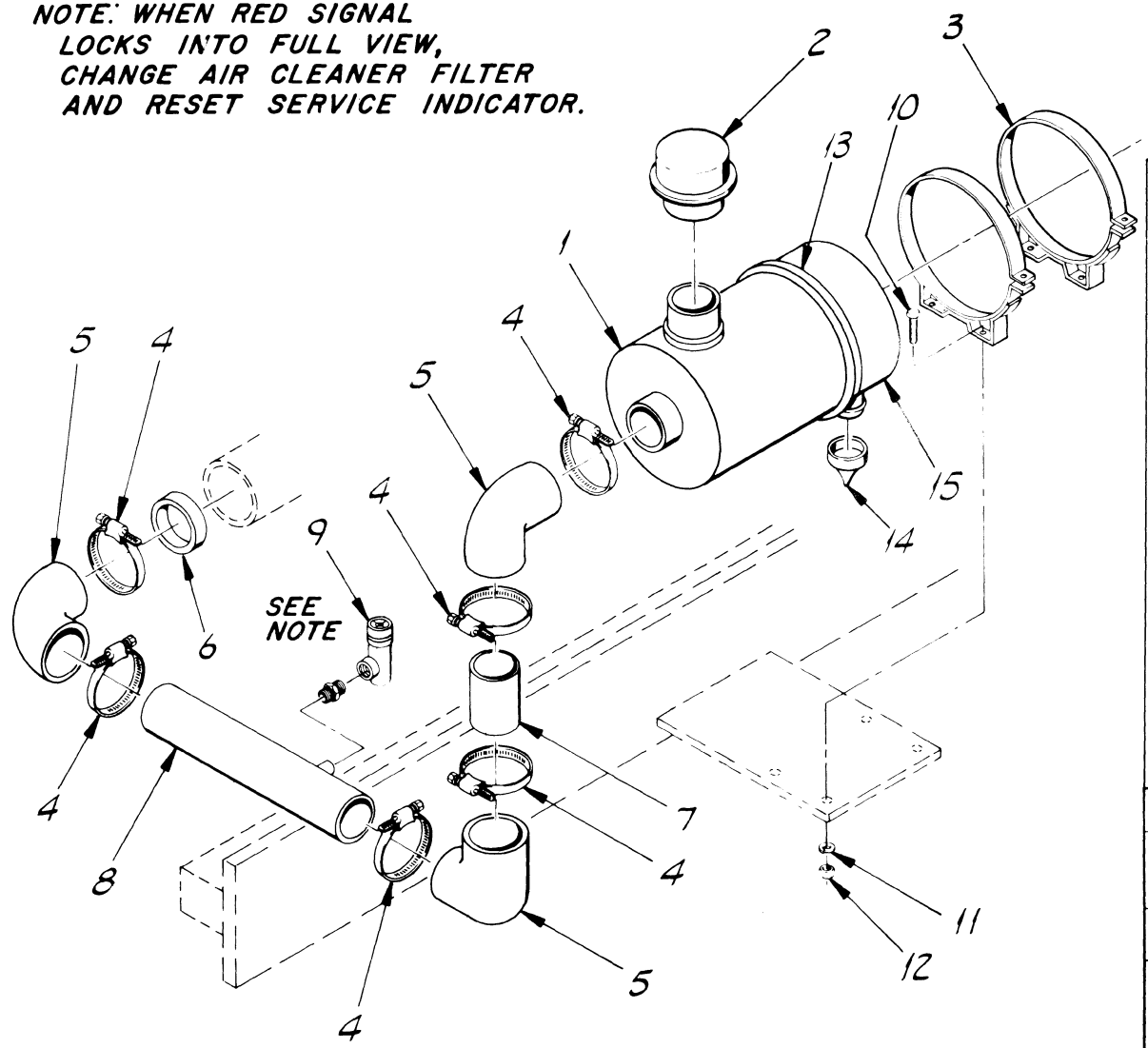

ITEM	PART NO	DESCRIPTION	REQ.
REF	P21310	PRE-CLEANER (OPTIONAL)	-
REF	P19476	FILTER ELEMENT	-
17	P21433	BAFFLE	-
16	P21435	THUMB SCREW	-
15	P19729	VACUATOR CUP	-
14	P20342	VACUATOR VALVE	-
13	P21431	CLAMP, AIR CLEANER	-
12	COM'L	NUT, HX. 3/8-16 NC	4
11	COM'L	LOCKWASHER, 3/8	4
10	COM'L	BOLT, HX. 3/8-16 NC × 1	4
9	P21309	SERVICE INDICATOR	1
8	17083A	TUBE, AIR INTAKE	1
7	18347-17	TUBE ADAPTOR	1
6	17079B	ADAPTOR, INTAKE	1
5	P19269	90° ELBOW, RUBBER	3
4	P19267	HOSE CLAMP	6
3	P19266	MOUNTING BAND	2
2	P19265	RAIN CAP	1
1	P19261	AIR CLEANER	1

LULL 8/83 Engineering Co., Inc.
ST. PAUL, MINNESOTA 55121

DRAWN BY Jeff Daul

S/N 101 THRU

DRAWING TITLE
AIR CLEANER ASSEMBLY MODEL 844

DEUTZ

SCALE B

DRAWING NO. 16828

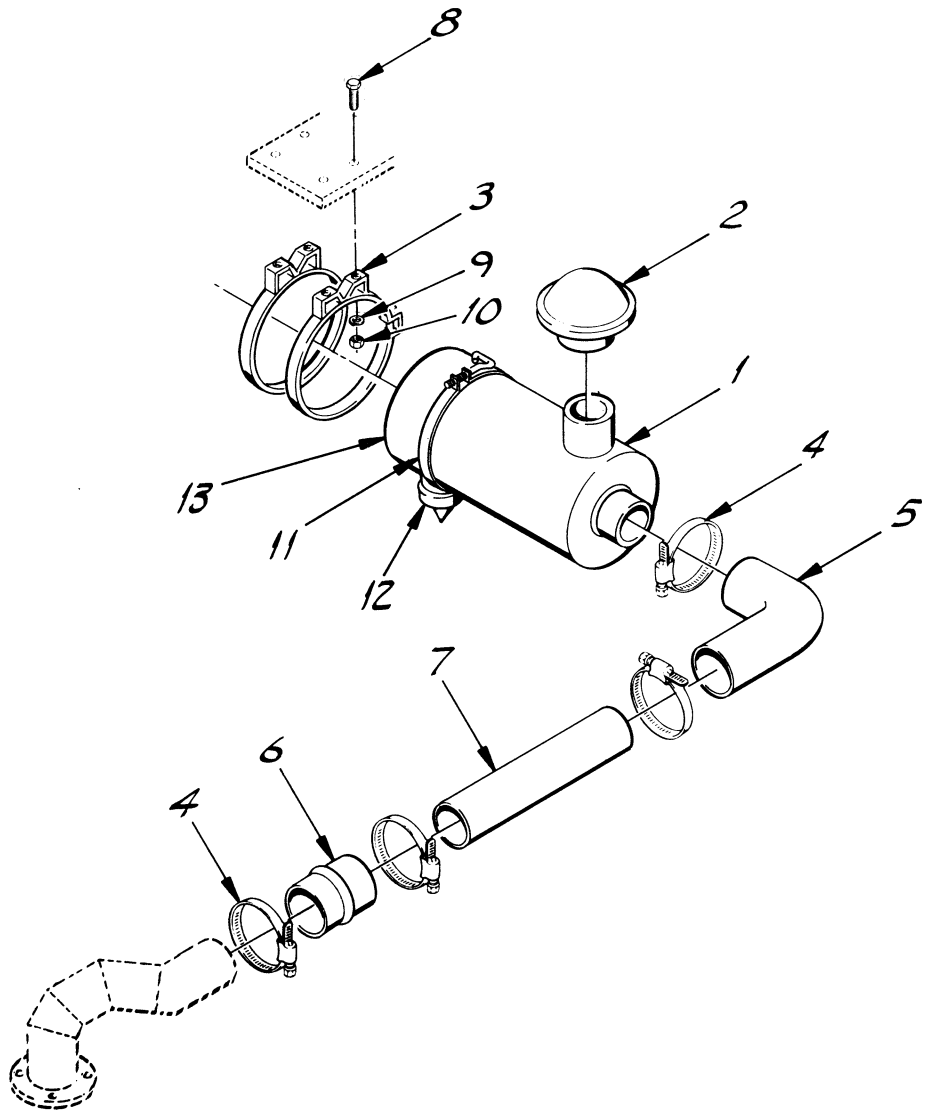

NOTES:

A) ITEM 1 INCLUDES ITEMS 11 THRU 16.

B) NOT ILLUSTRATED.

	ITEM	PART NO.	DESCRIPTION	REQ.
	REF	P21310	PRE-CLEANER (OPTION)	-
(B)	16	P19476	FILTER ELEMENT	-
(B)	15	P21433	BAFFLE	-
(B)	14	P21435	THUMB SCREW	-
	13	P19729	VACUATOR CUP	-
	12	P20342	VACUATOR VALVE	-
	11	P21431	CLAMP, AIR CLEANER	-
	10	COM'L	NUT, HX. 3/8"-16	4
	9	COM'L	LOCKWASHER, 3/8"	4
	8	COM'L	BOLT, HX. 3/8"-16 × 1"	4
	7	16089C	TUBE	1
	6	P19475	ADAPTOR	1
	5	P19269	90° RUBBER ELBOW	1
	4	P19267	HOSE CLAMP	4
	3	P19266	MOUNTING BAND	2
	2	P19265	RAIN CAP	1
(A)	1	P19261	AIR CLEANER	1

LULL 5/85 Engineering Co., Inc.
ST. PAUL, MINNESOTA 55121

DRAWN BY: Jeff Daub

S/N 101 THRU

DRAWING TITLE
AIR CLEANER ASSEMBLY MODEL 844

DETROIT

SCALE B

DRAWING NO. 16829

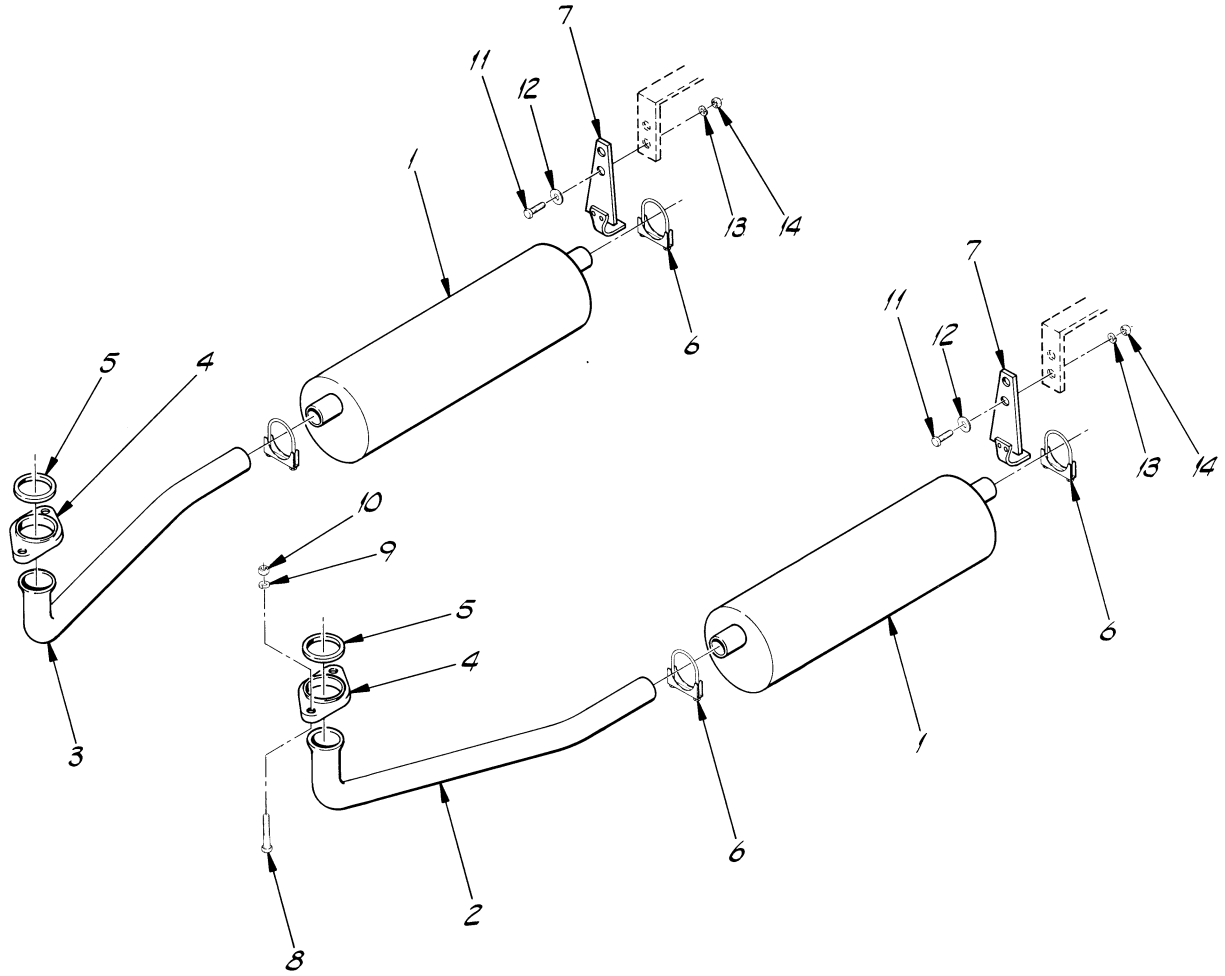

ITEM	PART NO.	DESCRIPTION	REQ.
14	P01508	NUT, HX. 3/8"-16	4
13	P01310	LOCKWASHER, 3/8"	4
12	P01404	FLATWASHER, 3/8"	4
11	P00202	BOLT, HX. 3/8"-16 x 3/4"	4
10	P01509	NUT, HX. 7/16"-14	4
9	P01311	LOCKWASHER, 7/16"	4
8	P00307	BOLT, HX. 7/16"-14 x 2 1/4"	4
7	P19280	MUFFLER HANGER	2
6	P10548	MUFFLER CLAMP	4
5	P17387	GASKET, METAL	2
4	P19069	FLANGE	2
3	P19135	EXHAUST PIPE, R.H.	1
2	P19134	EXHAUST PIPE, L.H.	1
1	P17581	MUFFLER	2

LULL 12/85 Engineering Co., Inc.
ST. PAUL, MINNESOTA 55121

DRAWN BY: Jeff Daub

S/N 101-255, 257-302

DRAWING TITLE: EXHAUST ASSEMBLY MODEL 844

CHRYS.

SCALE: C

DRAWING NO. 16830

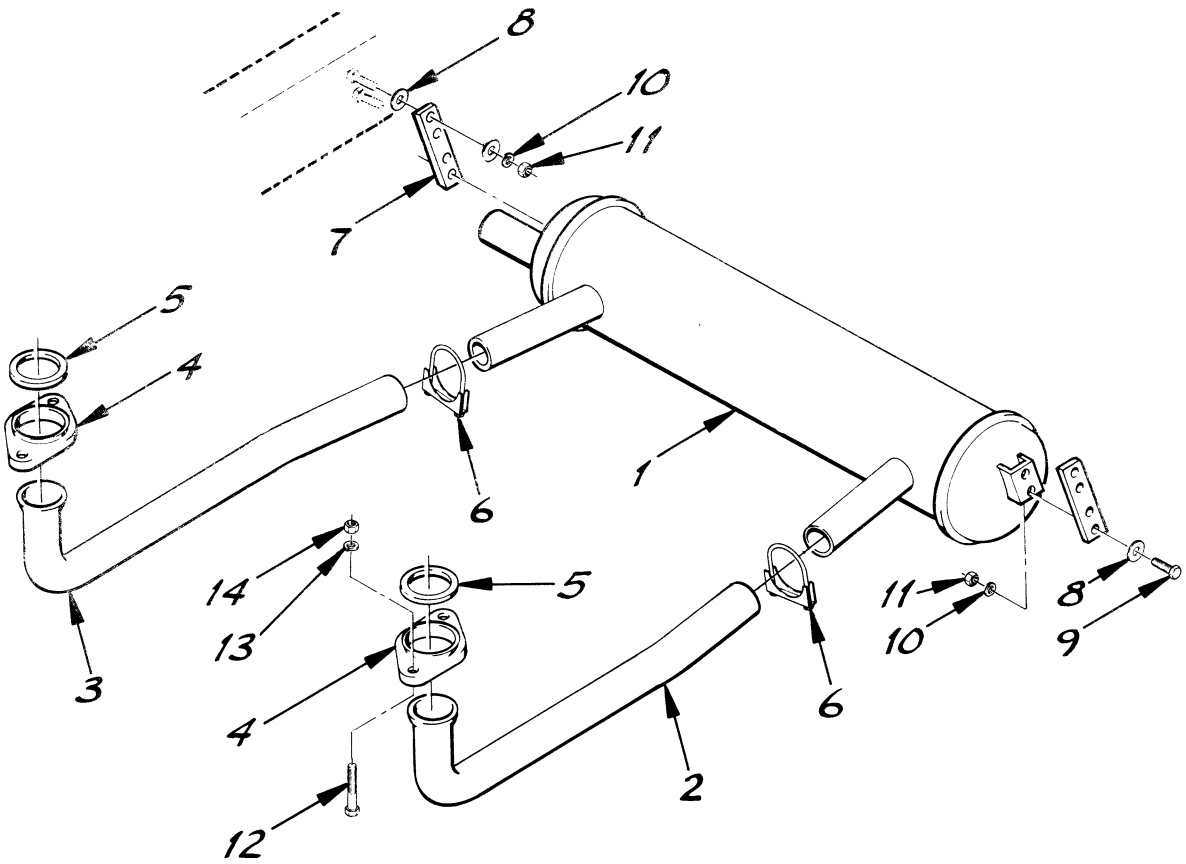

ITEM	PART NO.	DESCRIPTION	REQ.
14	COM'L	NUT, HX. 7/16"-14	4
13	COM'L	LOCKWASHER, 7/16"	4
12	COM'L	BOLT, HX. 7/16"-14 × 2 1/4"	4
11	COM'L	NUT, HX. 5/16"-18	8
10	COM'L	LOCKWASHER, 5/16"	8
9	COM'L	BOLT, HX. 5/16"-18 × 1"	4
8	P20349	FLATWASHER, SPECIAL	12
7	16077A	MUFFLER HANGER	2
6	P10548	MUFFLER CLAMP	2
5	P17387	GASKET, FLANGE	2
4	P19069	FLANGE	2
3	P19135	EXHAUST PIPE, R.H.	1
2	P19134	EXHAUST PIPE, L.H.	1
1	P20348	MUFFLER	1

LULL 5/85 Engineering Co., Inc.
ST. PAUL, MINNESOTA 55121

DRAWN BY 9/86 Daub

S/N 256, 303 THRU

DRAWING TITLE
EXHAUST ASSEMBLY MODEL 844

CHRYSLER

SCALE B

DRAWING NO. 16830-1

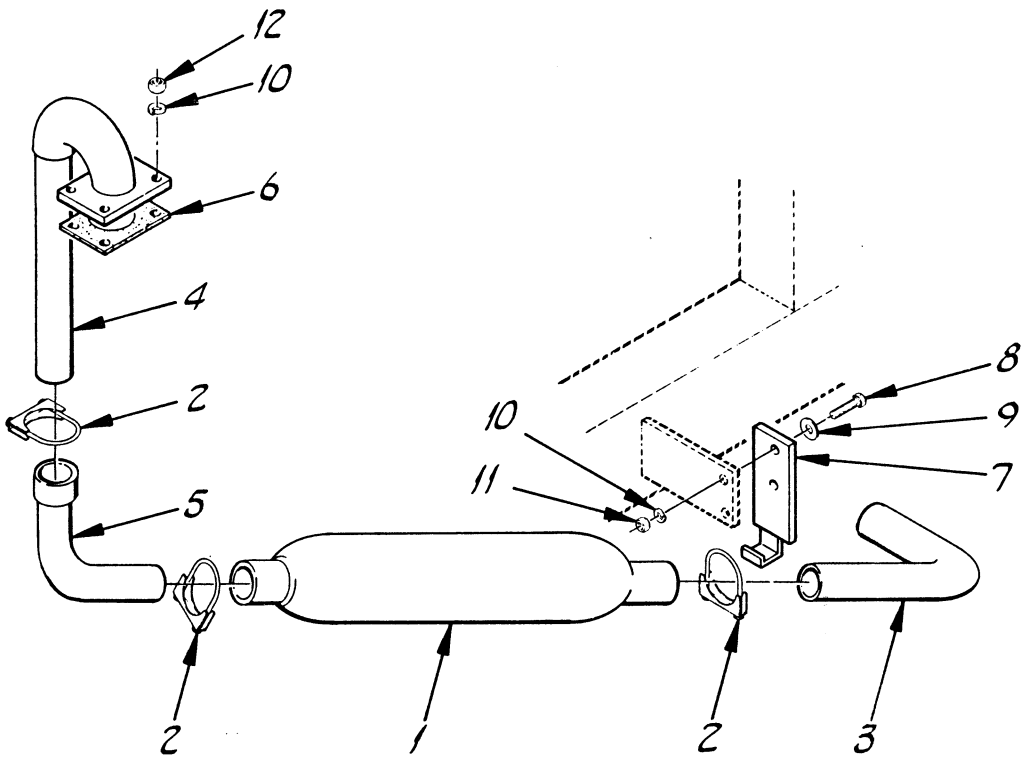

ITEM	PART NO.	DESCRIPTION	REQ.
12	COM'L	NUT, HX. 3/8"-24	4
11	COM'L	NUT, HX. 3/8"-16	4
10	COM'L	LOCKWASHER, 3/8"	8
9	COM'L	FLATWASHER, 3/8"	4
8	COM'L	BOLT, HX. 3/8"-16 × 1 1/4"	4
7	P19280	HANGER, EXHAUST	1
6	P16912	GASKET, EXHAUST	1
5	16352A	EXHAUST PIPE, ELBOW	1
4	16350B	EXHAUST PIPE, FLANGE	1
3	P20978	TAIL PIPE	1
2	P12169	MUFFLER CLAMP	3
1	P14149	MUFFLER	1

LULL 5/65 Engineering Co., Inc.
ST. PAUL, MINNESOTA 55121

DRAWN BY Jeff Paul

S/N 101 THRU

DRAWING TITLE
EXHAUST ASSEMBLY MODEL 844

WAUKESHA

SCALE 8

DRAWING NO. 16831

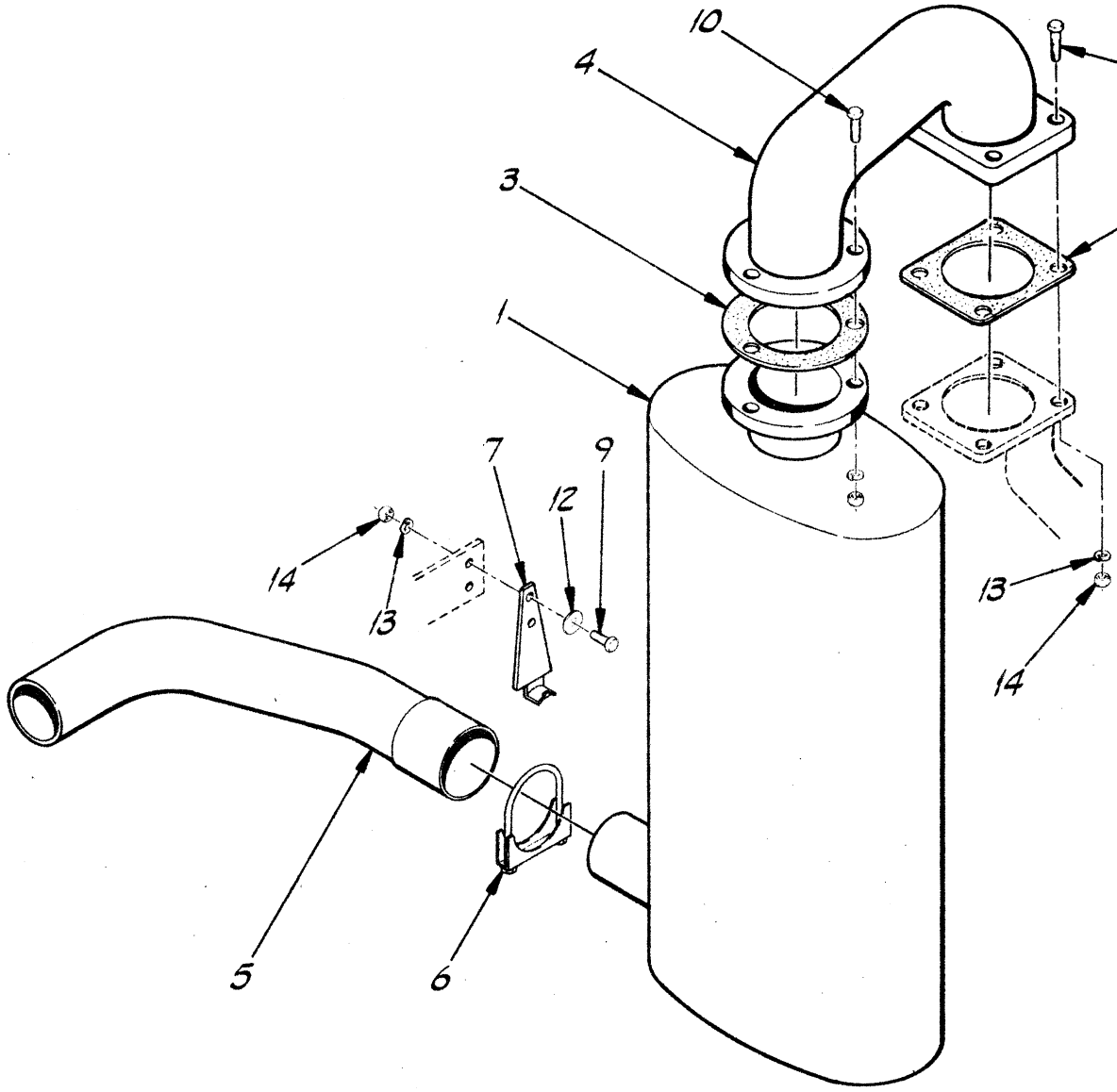

ITEM	PART NO	DESCRIPTION	REQ.
14	COM'L	NUT, HX. 3/8"-16 NC	9
13	COM'L	LOCKWASHER, 3/8"	9
12	COM'L	FLATWASHER, 3/8"	2
11	COM'L	BOLT, HX. 3/8"-16 NC × 1 3/4"	4
10	COM'L	BOLT, HX. 3/8"-16 NC × 1 1/4"	3
9	COM'L	BOLT, HX. 3/8"-16 NC × 3/4"	2
8	P12169	MUFFLER CLAMP, 2 1/2"	1
7	P19280	HANGER, TAILPIPE	1
6	P17169	MUFFLER CLAMP, 3"	1
5	P21800	TAIL PIPE	1
4	18990C	EXHAUST ELBOW	1
3	P22197	GASKET, MUFFLER	1
2	P21786	GASKET, MANIFOLD	1
1	P21790	MUFFLER	1

LULL Engineering Co., Inc. 10/83

ST. PAUL, MINNESOTA 55121

DRAWN BY Jeff Daub

S/N 795 THRU

DRAWING TITLE

EXHAUST ASSEMBLY MODEL 844

DEERE

SCALE B

DRAWING NO 16831-1

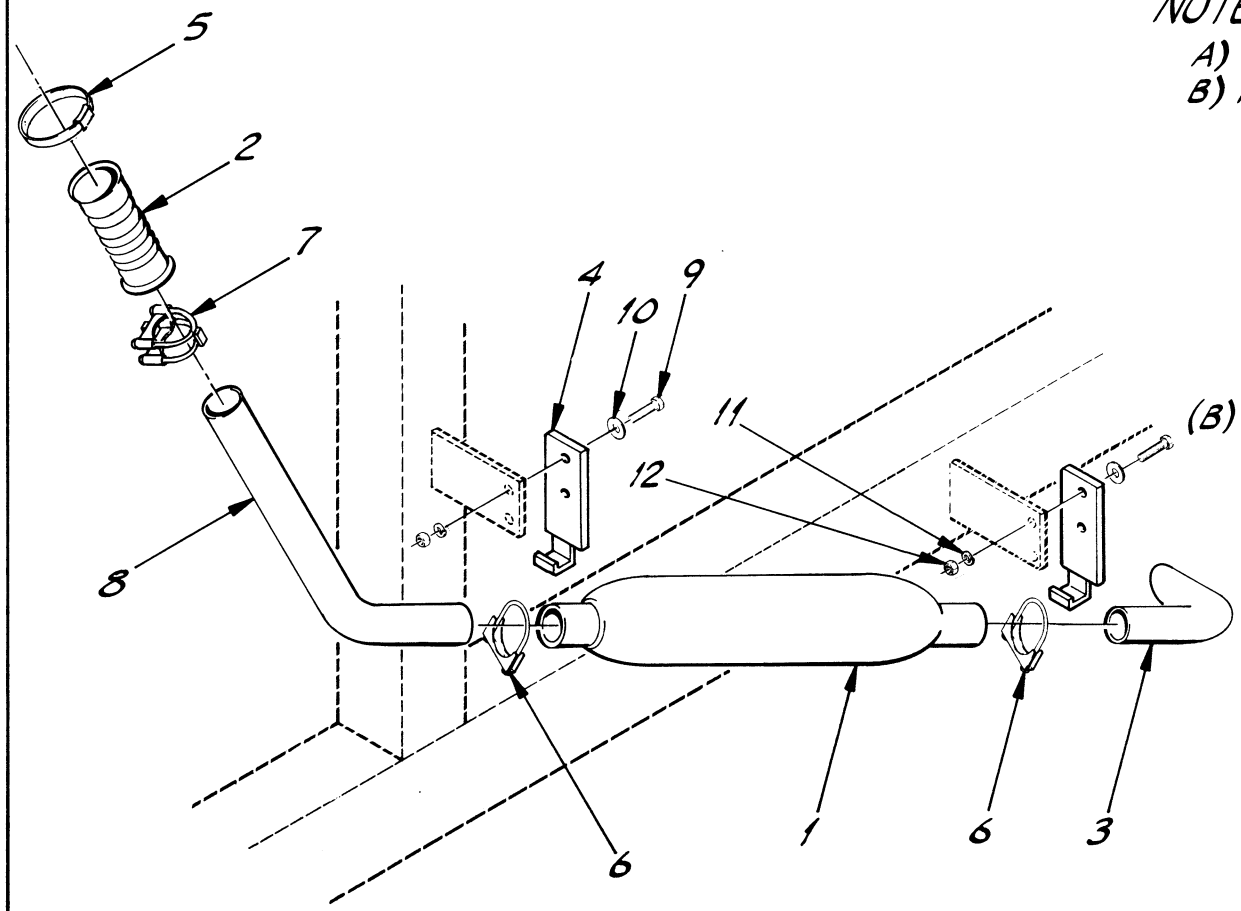

NOTES:

A) EXCEPT S/N 367 - 371.
B) FOR 4-53 DETROITS, USE 16572D.

ITEM	PART NO.	DESCRIPTION	REQ.
12	COM'L	NUT, HX. 3/8"-16	4
11	COM'L	LOCKWASHER, 3/8"	4
10	COM'L	FLATWASHER, 3/8"	4
9	COM'L	BOLT, HX. 3/8"-16 x 1 1/4"	4
8	16571D	EXHAUST TUBE	1
7	16573B	CLAMP, EXHAUST	1
6	P17169	CLAMP, MUFFLER	2
5	P19518	CLAMP, MANIFOLD	1
4	P19280	MUFFLER HANGER	2
3	P19276	TAIL PIPE	1
2	16574B	FLEX TUBE	1
1	P19262	MUFFLER	1

LULL 5/85 Engineering Co., Inc.
ST. PAUL, MINNESOTA 55121

DRAWN BY Jeff Daul

S/N 101 - 1094 (A)

DRAWING TITLE
EXHAUST ASSEMBLY MODEL 844

DETROIT

SCALE B

DRAWING NO. 16832

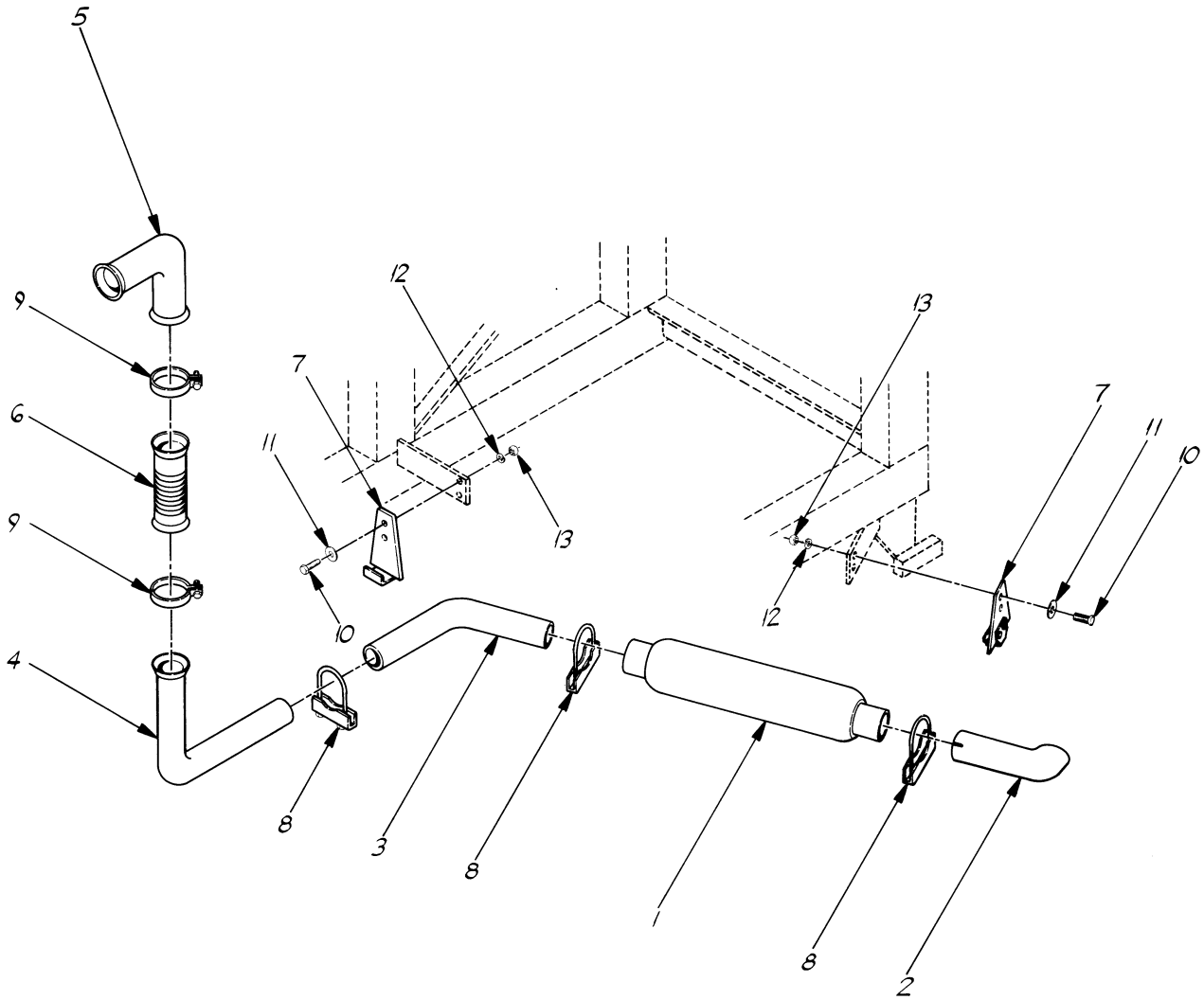

ITEM	PART NO.	DESCRIPTION	REQ.
13	COM'L	NUT, HX 3/8 - 16	4
12	COM'L	LOCKWASHER, 3/8	4
11	COM'L	FLATWASHER, 3/8	4
10	COM'L	BOLT, HX 3/8 - 16 x 1 1/4"	4
9	P19518	CLAMP	2
8	P17169	MUFFLER CLAMP	3
7	P19280	MUFFLER HANGER	2
6	P19275	FLEXIBLE TUBE	1
5	21632A	EXHAUST TUBE, 90° ELBOW	1
4	21630A	EXHAUST TUBE, 90° ELBOW	1
3	P25258	EXHAUST TUBE, 45° ELBOW	1
2	P19276	TAIL PIPE	1
1	P19262	MUFFLER	1

LULL Engineering Co., Inc.
ST. PAUL, MINNESOTA 55121

DRAWN BY D. NELSON

S/N 1095 THRU

DRAWING TITLE
EXHAUST ASSEMBLY

MODEL 844

DETROIT

SCALE C

DRAWING NO. 16832-1

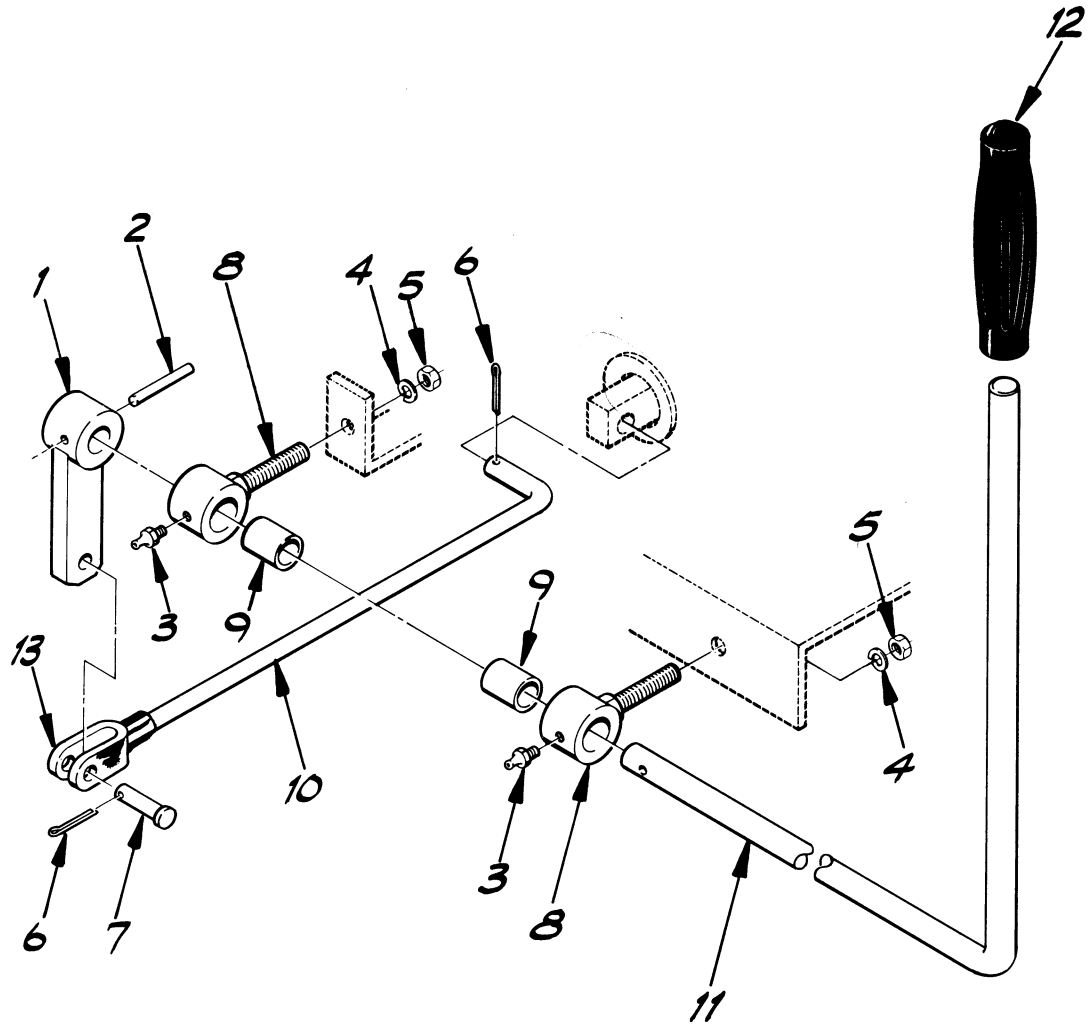

ITEM	PART NO.	DESCRIPTION	REQ.
13	P10193	CLEVIS	1
12	P18720	HANDLE GRIP	1
11	15921A	LEVER, DISCONNECT	1
10	15831A	LINK	1
9	P20368	BUSHING	2
8	15818A	LEVER MOUNT	2
7	P10509	CLEVIS PIN	1
6	COM'L	COTTER PIN 3/32" × 3/4"	2
5	COM'L	NUT, HEX 7/16"-20NF	2
4	COM'L	LOCKWASHER, 7/16"	2
3	P16611	ZERK FITTING	2
2	P10378	ROLL PIN 1/4" × 1 1/2"	1
1	15819A	ARM, DISCONNECT	1

LULL 5/84 Engineering Co., Inc.
ST. PAUL, MINNESOTA 55121

DRAWN BY Jeff Daub

S/N 101 - 1081

DRAWING TITLE
TRANS DISCONNECT ASSEMBLY

MODEL 844

SCALE B

DRAWING NO. 16833

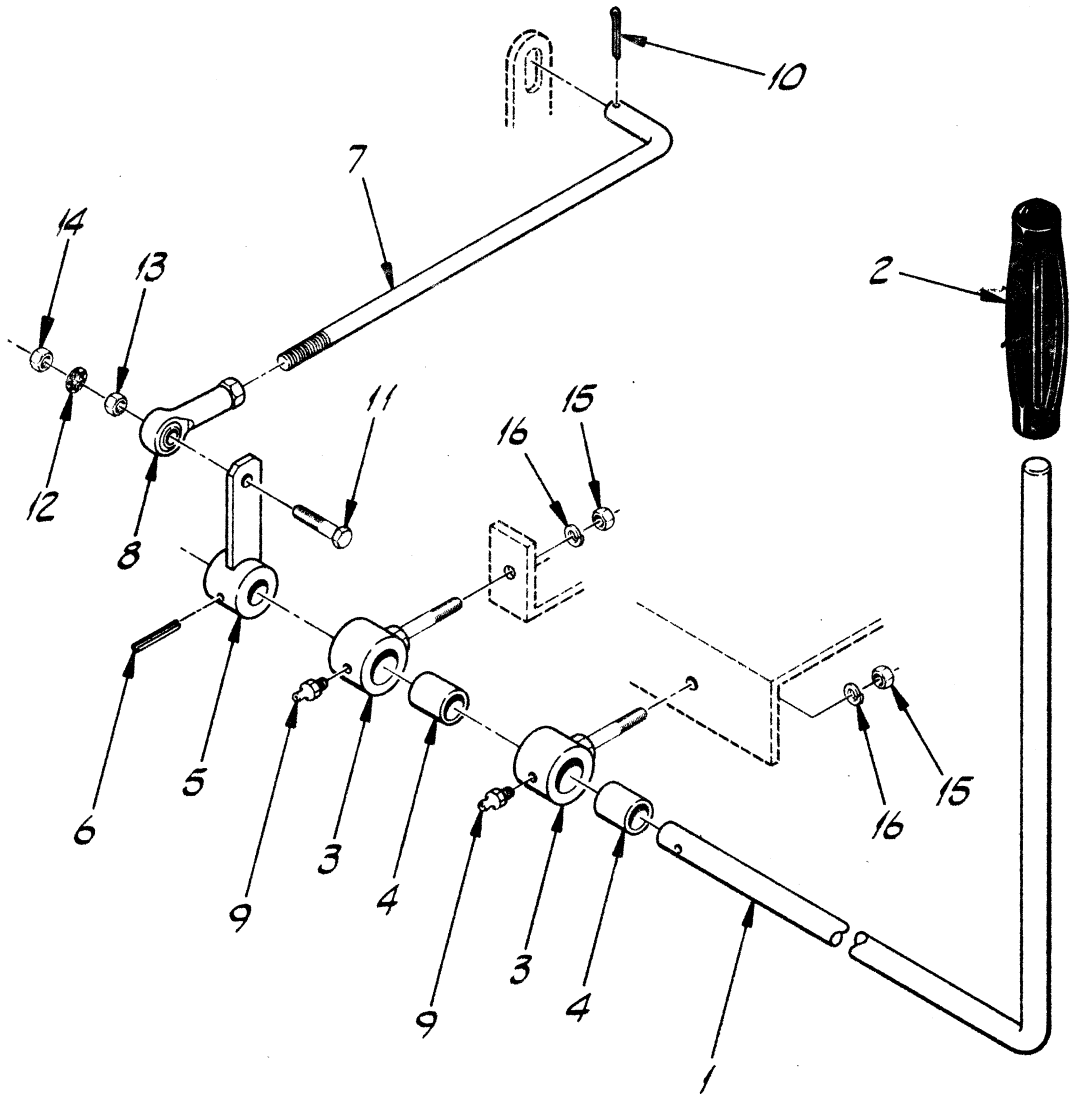

ITEM	PART NO.	DESCRIPTION	REQ.
16	COM'L	LOCKWASHER,	2
15	COM'L	NUT, HX. 7/16"-20	2
14	COM'L	JAM NUT, HX. 3/8"-16	1
13	COM'L	NUT, HX. 3/8"-16	1
12	COM'L	STARWASHER, 3/8"	1
11	COM'L	BOLT, HX. 3/8"-16 × 1 1/2"	1
10	COM'L	COTTER PIN, 3/32" × 3/4"	1
9	P16611	GREASE ZERK	2
8	P18719	RADIAL ROD END	1
7	15831A	ROD LINK	1
6	P10378	ROLL PIN	1
5	21477A	ARM, DISCONNECT	1
4	P20368	BUSHING	2
3	15818A	LEVER MOUNT	2
2	P18720	HANDLE GRIP	1
1	15921A	LEVER, DISCONNECT	1

LULL Engineering Co., Inc. ST. PAUL, MINNESOTA 55121

DRAWN BY Jeff Daub

S/N 1082 THRU

DRAWING TITLE

TRANSMISSION DISCONNECT ASSEMBLY MODEL 844

SCALE B

DRAWING NO. 16833-1

NOTES:

A) FOR S/N 101-1081 USE 15802D
B) FOR S/N 768-1081 USE 18690D
FOR S/N 101-767 USE 15503D
C) FOR SINGLE BAR BRACKET USE 18639B. MIRROR GUARD SHOWN MAY BE USED W/ ADDITIONAL DRILLING.
D) FOR SQUARE MIRROR, USE P20439
E) FOR S/N 101-1021 USE 18667D
F) FOR S/N1722,1724 USE23823D
G) FOR S/N1722,1724 USE23818D

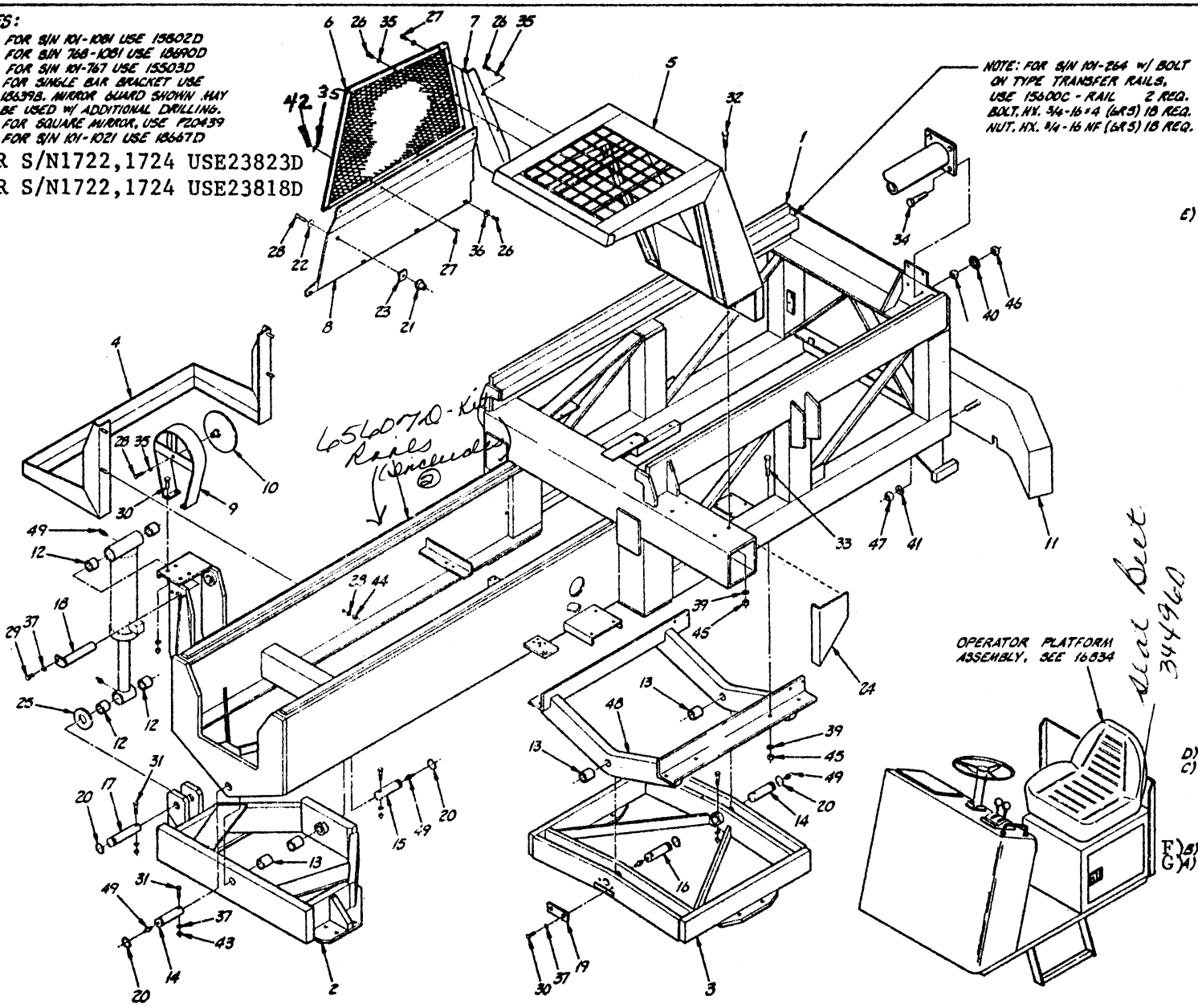

ITEM	PART NO.	DESCRIPTION	REQ.
49	P16611	GREASE ZERK	6
	15811D	SUBFRAME-WAUKESHA	1
	17067D	SUBFRAME-DEUTZ	1
	15811D	SUBFRAME-DETROIT	1
E)	18854D	SUBFRAME-DEERE	1
48	17133B	SUBFRAME-CHRYSLER	1
47	COM'L	NUT, HX. 1 1/8"-7 NC	2
46	COM'L	JAM NUT, HX. 1/2"-20 NF	4
45	COM'L	NUT, HX. 3/4"-16 NF	14
44	COM'L	NUT, HX. 1/2"-13 NC	4
43	COM'L	NUT, HX. 3/8"-16 NC	8
42	COM'L	NUT, HX. 1/4"-20 NC	6
41	COM'L	LOCKWASHER, 1 1/8"	2
40	COM'L	STARWASHER, 1/2"	4
39	COM'L	LOCKWASHER, 3/4"	14
38	COM'L	LOCKWASHER, 1/2"	4
37	COM'L	LOCKWASHER, 3/8"	11
36	COM'L	FLATWASHER, 1/4"	4
35	COM'L	LOCKWASHER, 1/4"	12
34	COM'L	BOLT, HX. 1/2"-20 NF × 2 1/2"	4
33	COM'L	BOLT, HX. 3/4"-16 NF × 2 1/4"	8
32	COM'L	BOLT, HX. 3/4"-16 NF × 1 1/2"	6
31	COM'L	BOLT, HX. 3/8"-16 NC × 3"	4
30	COM'L	BOLT, HX. 3/8"-16 NC × 1 1/4"	6
29	COM'L	BOLT, HX. 3/8"-16 NC × 3/4"	1
28	COM'L	BOLT, HX. 1/4"-20 NC × 1"	2
27	COM'L	BOLT, HX. 1/4"-20 NC × 3/4"	6
26	COM'L	SCREW, SELF-TAP, 1/4"-20 × 1/2"	9
25	P21586	SHIM	A/R
24	16296A	COVER CAP	1
23	16333A	RUBBER PAD	1
22	P20345	FENDER WASHER	1
21	P19077	WELL NUT	1
20	P18838	SNAP RING	5
19	15614A	PIN CLIP HOLDER	1
18	18339A	PIN, TILT CYL. UPPER	1
17	15636A	PIN, TILT CYL. LOWER	1
16	15620A	PIN, LOCKING	1
15	15613A	PIN, OSC. FRAME	1
14	15612A	PIN, OSC. FRAME	2
13	P19110	BUSHING	4
12	P19106	BUSHING	4
11	P18061	COUNTERWEIGHT	1
D) 10	P21368	MIRROR	1
C) 9	17164C	MIRROR GUARD	1
8	16280C	LOWER SHEILD	1
7	16279C	REAR SHEILD	1
6	16276C	SCREEN GUARD	1
5	15993D	OVERHEAD GUARD	1
4	15506D	TANK SUPPORT BRACKET	1
F) B) 3	21406D	REAR OSC. FRAME	1
G) A) 2	21405D	FRONT OSC. FRAME	1
1	15501R	MAIN FRAME	1

WILL Engineering Co., Inc. ST. PAUL, MINNESOTA 55121

DRAWN BY: Jeff Hook — S/N 101 THRU

MAIN FRAME ASSEMBLY MODEL 844

SCALE D

DRAWING NO. 16805

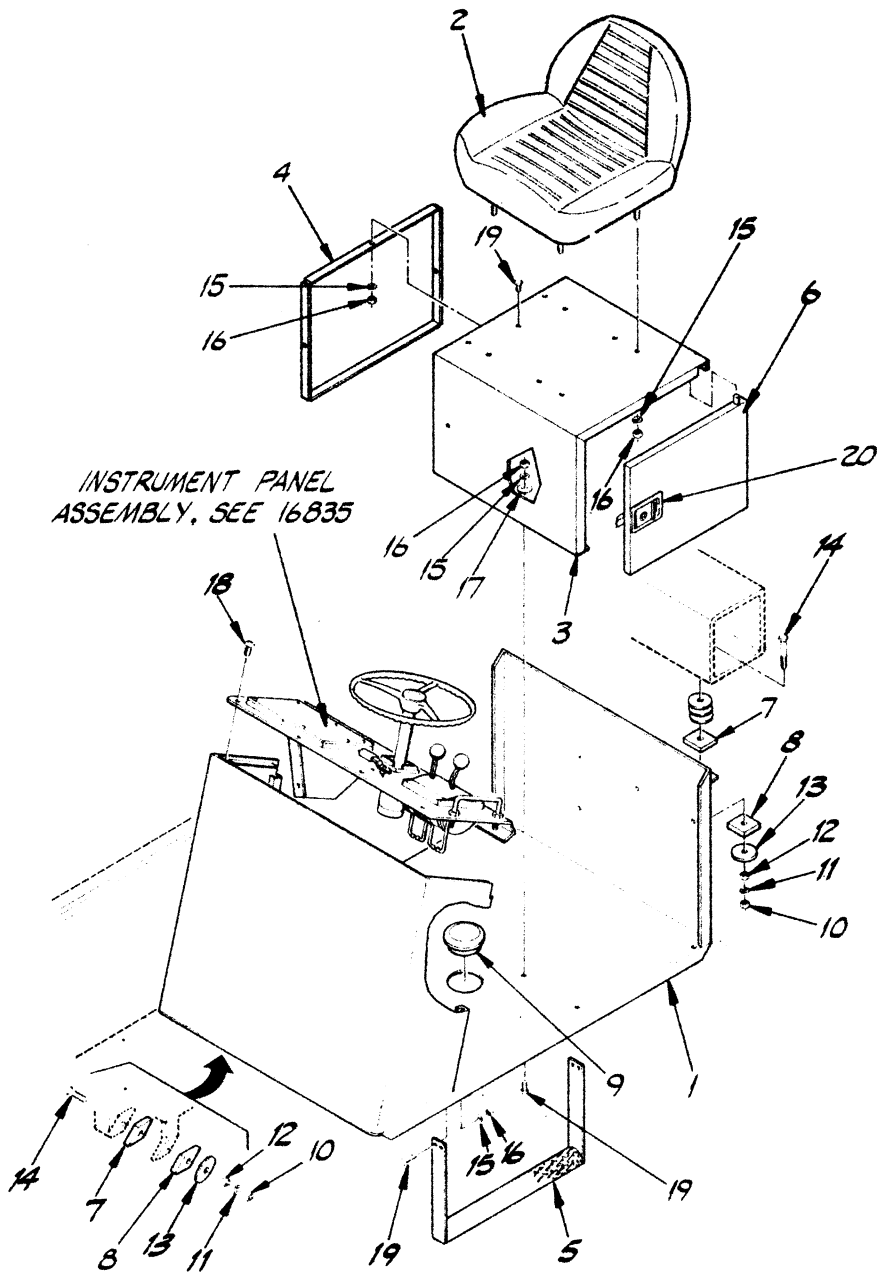

ITEM	PART NO.	DESCRIPTION	REQ.
20	P19085	DOOR LOCK	REF
19	COM'L	BOLT, HX 5/16-18NC x 1	4
18	COM'L	SCREW, RND HD 5/16-18NC x 3/4"	6
17	COM'L	FLATWASHER 5/16	9
16	COM'L	NUT, HX 5/16-18NC	20
15	COM'L	LOCKWASHER 5/16	20
14	COM'L	BOLT, HX 3/8-16NC x 2 3/4"	2
13	P20398	FLATWASHER	A-R
12	COM'L	NUT, HX 3/8-16NC	2
11	COM'L	LOCKWASHER 3/8	2
10	COM'L	JAM NUT, HX. 3/8-16	2
9	P16186	ACCESS COVER	1
8	15584A	PAD, STEEL	4
7	15862A	PAD, RUBBER	4
6	16378B	DOOR	1
5	15597A	STEP	1
4	16282B	BAFFLE	1
3	15738D	SEAT STAND	1
2	P17742	SEAT	1
1	15575D	PLATFORM	1

LULL Engineering Co., Inc.
ST. PAUL, MINNESOTA 55121

DRAWN BY Jeff Daul

S/N 101 THRU

DRAWING TITLE
OPERATOR PLATFORM ASSEMBLY

MODEL 844

SCALE C

DRAWING NO. 16834

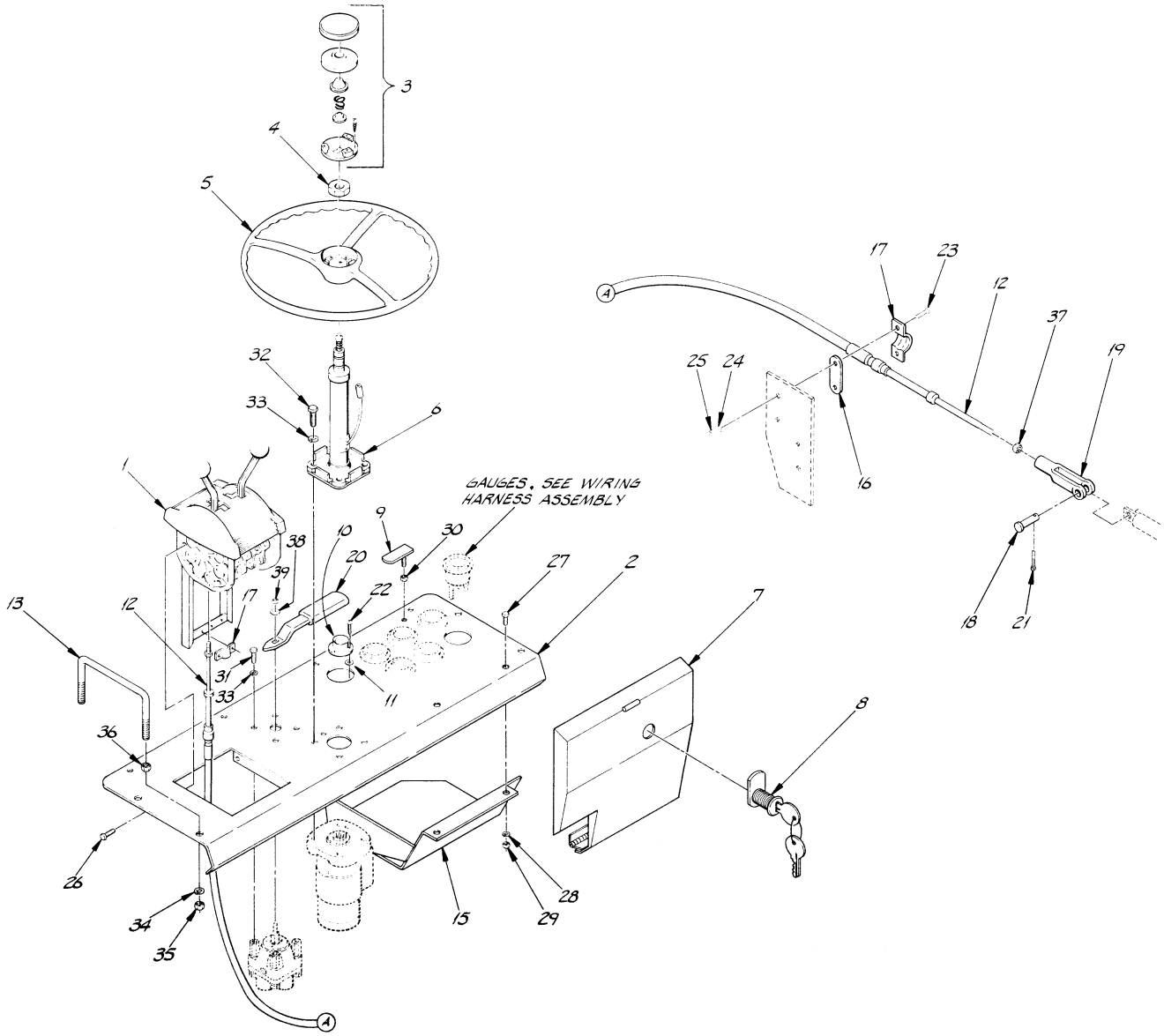

ITEM	PART NO.	DESCRIPTION	REQ.
39	COM'L	LOCKNUT, 1/4"-20 NC	1
38	COM'L	FLATWASHER, 1/4"	1
37	COM'L	NUT, HX. 1/4"-28 NF	2
36	COM'L	JAM NUT, 1/2"-13 NC	2
35	COM'L	NUT, HX. 1/2"-13 NC	2
34	COM'L	LOCKWASHER, 1/2"	2
33	COM'L	LOCKWASHER, 3/8"	8
32	COM'L	BOLT, HX. 3/8"-16 NC x 1 1/4"	4
31	COM'L	BOLT, HX. 3/8"-16 NC x 3/4"	4
30	COM'L	JAM NUT, 5/16"-18 NC	2
29	COM'L	NUT, HX. 1/4"-20 NC	4
28	COM'L	LOCKWASHER, 1/4"	4
27	COM'L	BOLT, HX. 1/4"-20 NC x 1/2"	4
26	COM'L	BOLT, HX. 1/4"-20 NC x 3/4"	4
25	COM'L	NUT, HX. #10-32	4
24	COM'L	LOCKWASHER, #10	4
23	COM'L	SCREW, R.H. #10-32 x 7/8"	4
22	COM'L	SCREW, R.H. #6-32 x 5/8"	3
21	COM'L	COTTER PIN, 1/8" x 1"	2
20	P18085	HANDLE	1
19	P17679	CLEVIS	2
18	P20833	CLEVIS PIN	2
17	P17678	CLAMP, CABLE	4
16	P19128	SHIM	2
15	159178	VANDAL COVER, LOWER	1
14	P18842	LATCH, VANDAL COVER	1
13	15573A	HAND HOLD	1
12	P17591	CABLE, SHIFT CONTROL	2
11	P18844	WASHER, CONICAL	6
10	P18816	LEVEL INDICATOR	1
9	143824	LATCH, LOCK	1
8	P17761	LOCK, VANDAL COVER	1
7	15739C	VANDAL COVER, UPPER	1
6	P18726	STEERING COLUMN	1
5	P13006	STEERING WHEEL	1
4	P13009	NUT, STEERING	1
3	P18727	HORN KIT	1
2	15744D	INSTRUMENT PANEL	1
1	P17589	SHIFT CONTROL	1

LULL Engineering Co., Inc. 4/81 — ST. PAUL, MINNESOTA 55121

DRAWN BY: Jeff Neat — S/N 101 - 161

DRAWING TITLE: INSTRUMENT PANEL ASSEMBLY MODEL 844

SCALE: D

DRAWING NO. 16835

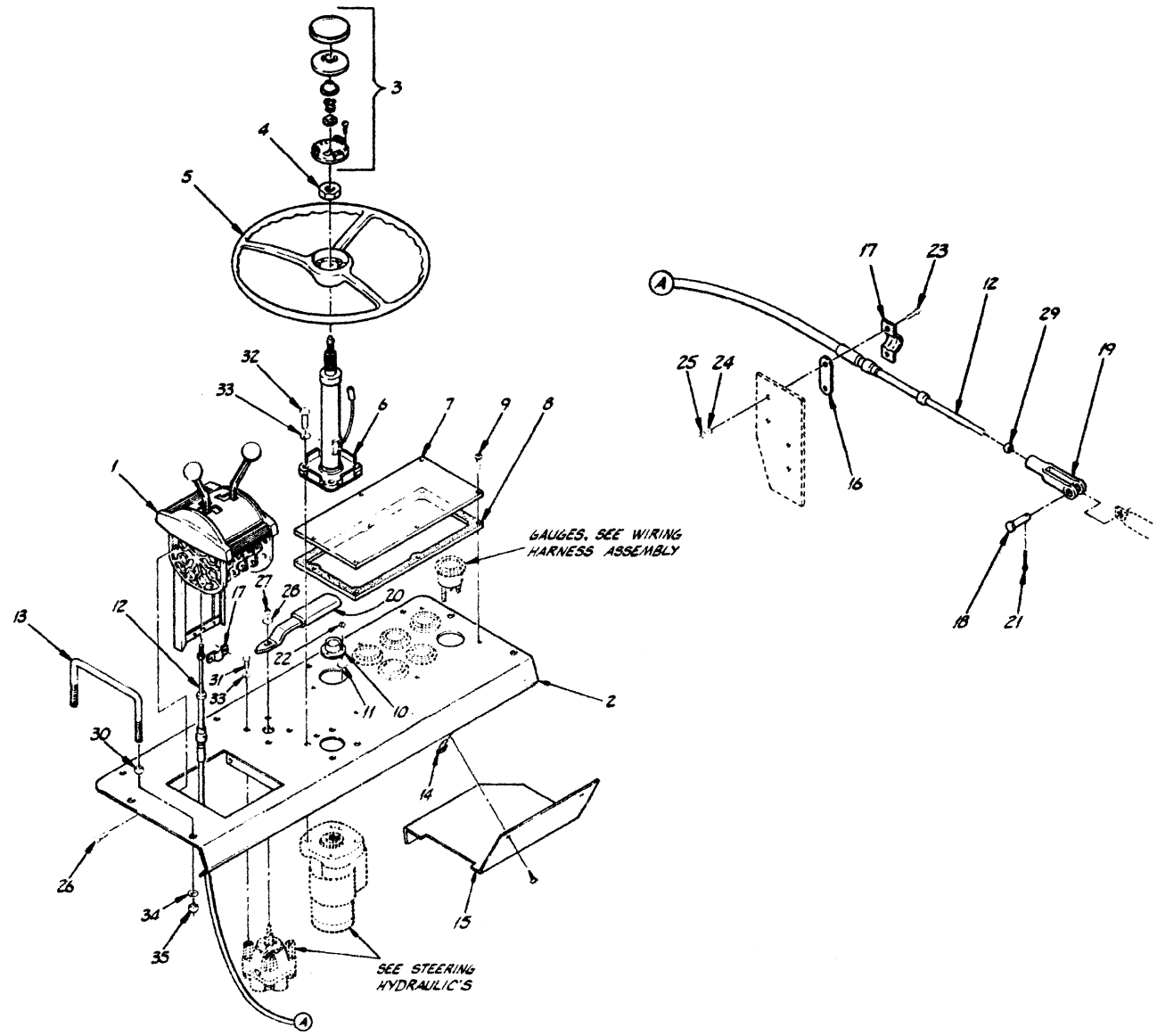

ITEM	PART NO.	DESCRIPTION	REQ.
35	COM'L	NUT, HX. 1/2"-13 NC	2
34	COM'L	LOCKWASHER, 1/2"	2
33	COM'L	LOCKWASHER, 3/8"	8
32	COM'L	BOLT, HX. 3/8"-16 NC × 1 1/4"	4
31	COM'L	BOLT, HX. 3/8"-16 NC × 3/4"	4
30	COM'L	JAM NUT, 1/2"-13 NC	2
29	COM'L	NUT, HX. 1/4"-28 NF	2
28	COM'L	FLAT WASHER, 1/4"	1
27	COM'L	LOCKNUT, 1/4"-20 NC	1
26	COM'L	BOLT, HX. 1/4"-20 NC × 3/4"	4
25	COM'L	NUT, HX. #10-32	4
24	COM'L	LOCKWASHER, #10	4
23	COM'L	SCREW, R.H. #10-32 × 7/8"	4
22	COM'L	SCREW, R.H. #6-32 × 5/8"	3
21	COM'L	COTTER PIN, 1/8" × 1"	2
20	P18085	HANDLE	REF
19	P17679	CLEVIS	2
18	P20833	CLEVIS PIN	2
17	P17678	CLAMP, CABLE	4
16	P19128	SHIM	2
15	16539C	VANDAL COVER, LOWER	1
14	P19254	SPEED NUT	4
13	15573A	HAND HOLD	1
12	P17591	CABLE, SHIFT CONTROL	2
11	P18844	WASHER, CONICAL	6
10	P18816	LEVEL INDICATOR	1
9	P19424	SOCKET HD. SCREW	6
8	P19536	GASKET	1
7	16538B	VANDAL COVER, UPPER	1
6	P18726	STEERING COLUMN	1
5	P13006	STEERING WHEEL	1
4	P13009	NUT, STEERING	1
3	P18727	HORN KIT	1
2	15744D	INSTRUMENT PANEL	1
1	P17589	SHIFT CONTROL	1

LULL Engineering Co., Inc. ST. PAUL, MINNESOTA 55121

DRAWN Jeff Dent S/N 162 THRU

INSTRUMENT PANEL ASSEMBLY
MODEL 844

SCALE D

DRAWING NO. 16835-1

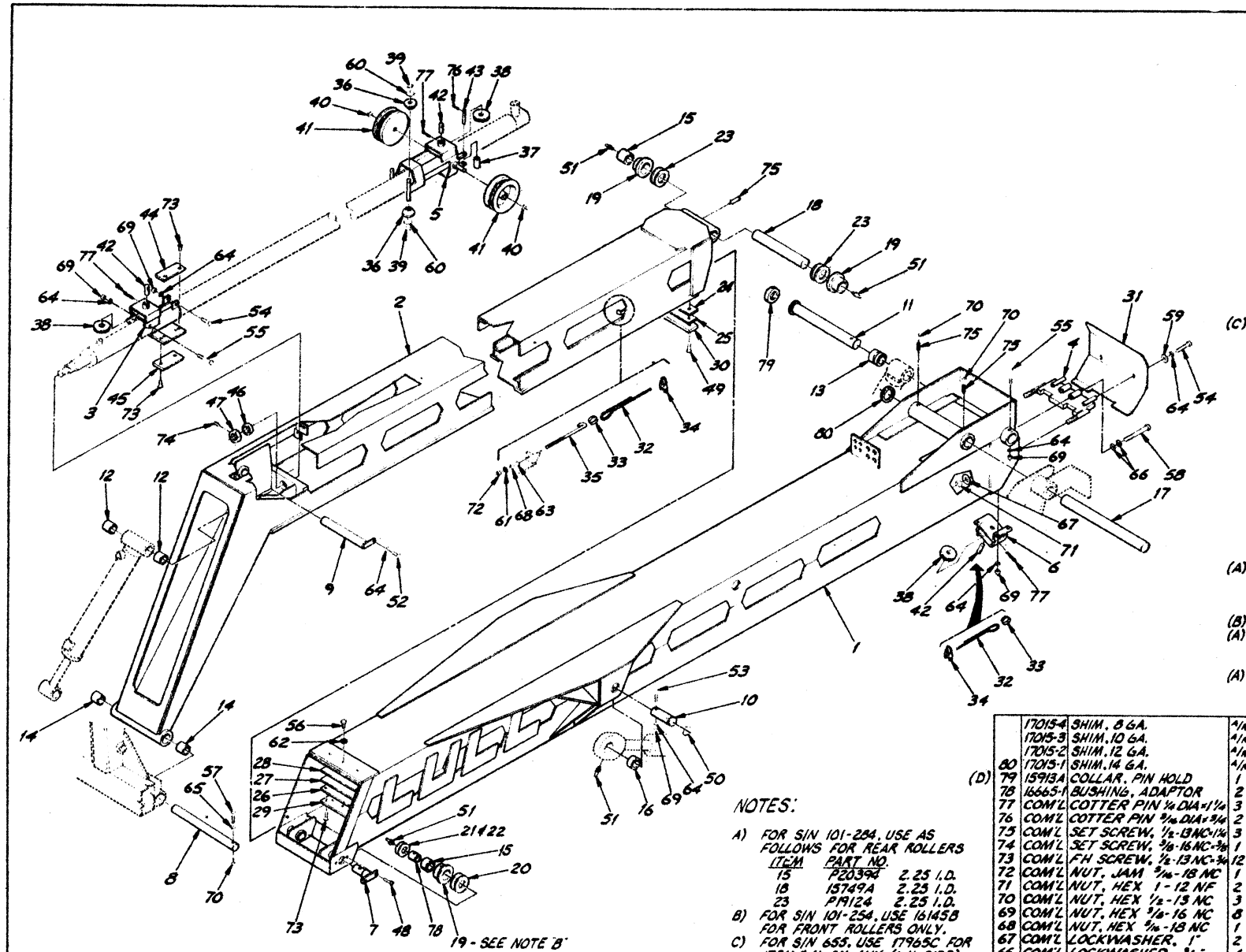

NOTES:

A) FOR S/N 101-284, USE AS FOLLOWS FOR REAR ROLLERS

ITEM	PART NO.	
15	P20393	2.25 I.D.
18	15749A	2.25 I.D.
23	P19124	2.25 I.D.

B) FOR S/N 101-254, USE 16145B FOR FRONT ROLLERS ONLY.

C) FOR S/N 655, USE 17965C FOR ITEM #41 ON AUX. (L.H. SIDE)

D) FOR S/N 101-446 ONLY. ITEM #11 MAY BE USED FOR REPLACEMENT OF PIN AND COLLAR.

	ITEM	PART NO	DESCRIPTION	REQ.
		17015-4	SHIM, .8 GA.	A/R
		17015-3	SHIM, .10 GA.	A/R
		17015-2	SHIM, .12 GA.	A/R
	80	17015-1	SHIM, .14 GA.	A/R
(D)	79	15913A	COLLAR, PIN HOLD	1
	78	16665-1	BUSHING, ADAPTOR	2
	77	COM'L	COTTER PIN 1/4 DIA x 1 1/4	3
	76	COM'L	COTTER PIN 3/16 DIA x 3/4	2
	75	COM'L	SET SCREW, 1/2-13 NC x 1 1/4	3
	74	COM'L	SET SCREW, 5/8-16 NC x 5/8	1
	73	COM'L	FH SCREW, 1/2-13 NC x 3/4	12
	72	COM'L	NUT, JAM 5/16-18 NC	1
	71	COM'L	NUT, HEX 1-12 NF	2
	70	COM'L	NUT, HEX 1/2-13 NC	3
	69	COM'L	NUT, HEX 5/8-16 NC	8
	68	COM'L	NUT, HEX 5/16-18 NC	1
	67	COM'L	LOCKWASHER, 1"	2
	66	COM'L	LOCKWASHER, 3/4"	4
	65	COM'L	LOCKWASHER, 1/2"	1
	64	COM'L	LOCKWASHER, 5/8"	11

	ITEM	PART NO	DESCRIPTION	REQ.
	63	COM'L	LOCKWASHER, 5/16"	1
	62	COM'L	STARWASHER, 1/2"	3
	61	COM'L	STARWASHER, 5/16"	1
	60	COM'L	FLATWASHER, 5/16"	4
	59	COM'L	FLATWASHER, 5/8"	2
	58	COM'L	BOLT, HX 5/16-10 NC x 6 1/2"	2
	57	COM'L	BOLT, HX. 1/2-13 NC x 4"	2
	56	COM'L	BOLT, HX. 1/2-13 NC x 3 1/4"	3
	55	COM'L	BOLT, HX. 5/8-16 NC x 4 3/4"	2
	54	COM'L	BOLT, HX. 5/8-16 NC x 4 1/4"	3
	53	COM'L	BOLT, HX. 5/8-16 NC x 3 3/4"	2
	52	COM'L	BOLT, HX. 5/16-18 NC x 3/4"	1
	51	P16611	GREASE ZERK	4
	50	P18838	RETAING RING, 2"	2
	49	P20154	FH SOCKET CAPSCREW	4
	48	P20152	FH SOCKET CAPSCREW	4
	47	16369A	NUT, BOOM CYL. ROD	1
	46	13599A	BOSS, BOOM CYL. ROD	1
	45	16257A	SLIDE PLATE, LOWER	2
	44	16256A	SLIDE PLATE, UPPER	2
	43	16250A	PIN, VERTICAL, REAR	2
	42	16249A	SHAFT, SHEAVE MOUNT	3
(C)	41	15816C	SHEAVE, HOSE TAKE-UP	2
	40	P18840	SNAP RING, 7/8"	2
	39	P18839	SNAP RING, 5/8"	4
	38	P18829	SHEAVE	3
	37	P18828	ROLLER, RR. HOSE REEL	2
	36	P18827	ROLLER, FT. HOSE REEL	4
	35	16265A	ROD, WIRE TIGHTENER	1
	34	P19259	WIRE CLIP	4
	33	P19258	THIMBLE	3
	32	P19257	WIRE ROPE, 3/16" DIA.	34
	31	15777C	COVER PLT., OUT. BOOM	1
	30	15765A	SLIDE PLT., IN. BOOM	2
	29	15774A	SLIDE PLATE, FRONT	1
	28	15886A	SLIDE PLATE, BASE	1
	27	16362A	SHIM, OUTER BOOM, 1/8	A/R
	26	16361A	SHIM, OUTER BOOM, 1/16	A/R
	25	17962B	SHIM, INNER BOOM, 16GA	A/R
	24	15764A	SHIM, INNER BOOM, 12GA	A/R
(A)	23	P20431	SPACER WASHER, 14GA	A/R
	22	P19731	SPACER WASHER, 18GA	A/R
	21	P19730	SPACER WASHER, 14GA	A/R
	20	P19125	SPACER WASHER, 14 GA.	A/R
(B)	19	15969B	ROLLER	4
(A)	18	16678A	SHAFT, INNER BOOM	1
	17	15907B	SHAFT, MAIN PIVOT	1
	16	P18830	BUSHING, SELF-ALIGN	2
(A)	15	P20393	BUSHING, ROLLER	4
	14	P19109	BUSHING, CARR SHAFT	2
	13	P19108	BUSHING, TILT CYL	1
	12	P19106	BUSHING, CARR TILT CYL	2
	11	18634A	PIN, TILT CYL TO BOOM	1
	10	16387A	PIN, UPPER HOIST CYL.	2
	9	15769A	PIN, FRONT TILT CYL.	1
	8	15723A	PIN, BOOM TO CARR.	1
	7	15861A	ROLLER SHAFT WELD	2
	6	16266B	REAR SHEAVE WELD'T	1
	5	15815D	HOSE REEL WELD'T	1
	4	15814B	BASE SUPP'T WELD'T	1
	3	15813D	FRONT SUPP'T WELD'T	1
	2	15569R	INNER BOOM WELD'T	1
	1	15968R	OUTER BOOM WELD'T	1

ITEM	PART NO.	DESCRIPTION	REQ.

LULL Engineering Co., Inc. — ST. PAUL, MINNESOTA 55121

DRAWN BY: J. DAVIS — S/N 101-658, 660-662

DRAWING TITLE: TELESCOPIC BOOM ASSEMBLY MODEL 844

SCALE: D

DRAWING NO. 16806

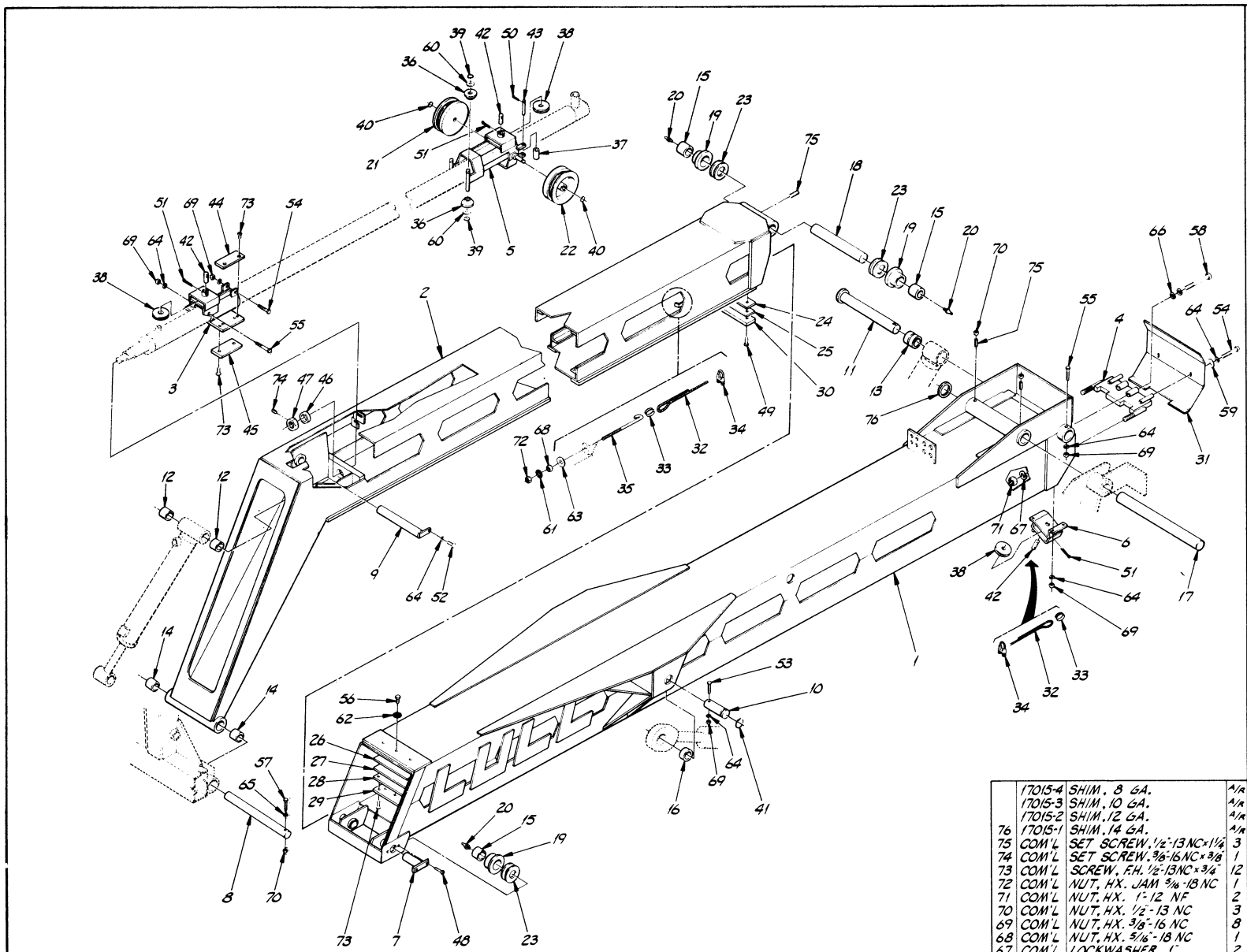

ITEM	PART NO.	DESCRIPTION	REQ.
63	COM'L	LOCKWASHER, 5/16"	1
62	COM'L	STARWASHER, 1/2"	3
61	COM'L	STARWASHER, 5/16"	1
60	COM'L	FLATWASHER, 5/8"	4
59	COM'L	FLATWASHER, 5/8"	2
58	COM'L	BOLT, HX. 3/4"-10 NC×6 1/2"	2
57	COM'L	BOLT, HX. 1/2"-13 NC × 4"	2
56	COM'L	BOLT, HX. 1/2"-13 NC × 3/4"	3
55	COM'L	BOLT, HX. 3/8"-16 NC × 4 3/4"	2
54	COM'L	BOLT, HX. 3/8"-16 NC × 4 1/4"	3
53	COM'L	BOLT, HX. 3/8"-16 NC × 3 3/4"	2
52	COM'L	BOLT, HX. 3/8"-16 NC × 3/4"	1
51	COM'L	COTTER PIN, 1/4" × 1 1/4"	3
50	COM'L	COTTER PIN, 3/16" × 3/4"	2
49	P20154	CAPSCREW, SOCKET HD.	4
48	P20152	CAPSCREW, SOCKET HD.	4
47	16369A	NUT, BOOM CYL. ROD	1
46	13599A	BOSS, BOOM CYL ROD	1
45	16257A	SLIDE PLATE, LOWER	2
44	16256A	SLIDE PLATE, UPPER	2
43	16250A	PIN, VERTICAL, REAR	2
42	16249A	SHAFT, SHEAVE MOUNT	3
41	P18838	RETAING RING, 2"	2
40	P18840	SNAP RING, 7/8"	2
39	P18839	SNAP RING, 5/8"	4
38	P18829	SHEAVE	3
37	P18828	ROLLER, REAR	2
36	P18827	ROLLER, FRONT	4
35	16265A	ROD, WIRE TIGHTENER	1
34	P19259	WIRE CLIP	4
33	P19258	THIMBLE	3
32	P19257	WIRE ROPE, 3/16" DIA.	34'
31	15777C	COVER PLATE	1
30	15765A	SLIDE PLATE, REAR	2
29	15774A	SLIDE PLATE, FRONT	1
28	15886A	SLIDE PLATE, BASE	1
27	16362A	SHIM, OUTER BOOM, 1/8"	A/R
26	16361A	SHIM, OUTER BOOM, 1/16"	A/R
25	17962B	SHIM, INNER BOOM, 16 GA.	A/R
24	15764A	SHIM, INNER BOOM, 12 GA.	A/R
23	P20431	SPACER WASHER	A/R
22	17965C	SHEAVE, AUX. LINE	1
21	15816C	SHEAVE	1
20	P16611	GREASE ZERK	4
19	15969B	ROLLER	4
18	16678A	SHAFT, INNER BOOM	1
17	15907B	SHAFT, MAIN PIVOT	1
16	P18830	BUSHING, SELF-ALIGN	2
15	P20393	BUSHING, ROLLER	4
14	P19109	BUSHING, CARR. SHAFT	2
13	P19108	BUSHING, TILT CYL.	1
12	P19106	BUSHING, CARR. TILT CYL.	2
11	18634A	PIN, TILT CYL. TO BOOM	1
10	16387A	PIN, UPPER HOIST CYL.	2
9	15769A	PIN, FRONT TILT CYL.	1
8	15723A	PIN, BOOM TO CARR.	1
7	17188B	ROLLER SHAFT	2
6	16266B	REAR SHEAVE	1
5	15815D	HOSE REEL	1
4	15814B	BASE SUPPORT	1
3	15813D	FRONT SUPPORT	1
2	15569R	INNER BOOM	1
1	17191R	OUTER BOOM	1
	17015-4	SHIM, 8 GA.	A/R
	17015-3	SHIM, 10 GA.	A/R
	17015-2	SHIM, 12 GA.	A/R
76	17015-1	SHIM, 14 GA.	A/R
75	COM'L	SET SCREW, 1/2"-13 NC × 1 1/4"	3
74	COM'L	SET SCREW, 3/8"-16 NC × 3/8"	1
73	COM'L	SCREW, F.H. 1/2"-13 NC × 3/4"	12
72	COM'L	NUT, HX. JAM 5/16"-18 NC	1
71	COM'L	NUT, HX. 1"-12 NF	2
70	COM'L	NUT, HX. 1/2"-13 NC	3
69	COM'L	NUT, HX. 3/8"-16 NC	8
68	COM'L	NUT, HX. 5/16"-18 NC	1
67	COM'L	LOCKWASHER, 1"	2
66	COM'L	LOCKWASHER, 3/4"	4
65	COM'L	LOCKWASHER, 1/2"	1
64	COM'L	LOCKWASHER, 3/8"	11

LULL ®/TM

ST. PAUL, MINNESOTA 55121

DRAWN BY: Jeff Grant

S/N 659, 663 - 1040

DRAWING TITLE: TELESCOPIC BOOM ASSEMBLY MODEL 844

REQD.

SCALE: D

DRAWING NO. 16806-1

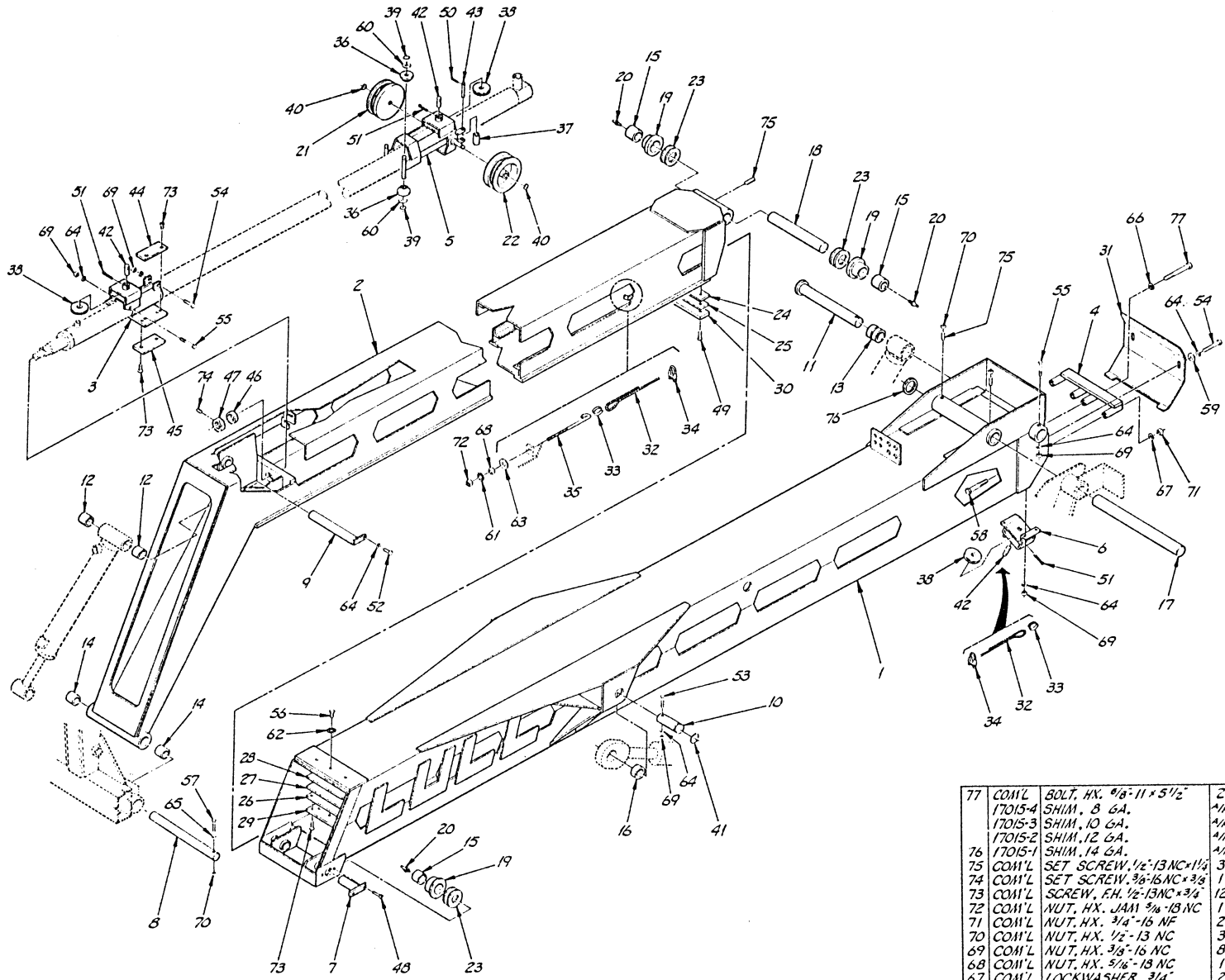

ITEM	PART NO	DESCRIPTION	REQ.
77	COM'L	BOLT, HX. 6/8"-11 x 5 1/2"	2
	17015-4	SHIM, 8 GA.	A/R
	17015-3	SHIM, 10 GA.	A/R
	17015-2	SHIM, 12 GA.	A/R
76	17015-1	SHIM, 14 GA.	A/R
75	COM'L	SET SCREW, 1/2"-13 NC x 1 1/2	3
74	COM'L	SET SCREW, 3/8"-16 NC x 3/8	1
73	COM'L	SCREW, F.H. 1/2"-13 NC x 3/4"	12
72	COM'L	NUT, HX. JAM 5/16"-18 NC	1
71	COM'L	NUT, HX. 3/4"-16 NF	2
70	COM'L	NUT, HX. 1/2"-13 NC	3
69	COM'L	NUT, HX. 3/8"-16 NC	8
68	COM'L	NUT, HX. 5/16"-18 NC	1
67	COM'L	LOCKWASHER, 3/4"	2
66	COM'L	LOCKWASHER, 5/8"	2
65	COM'L	LOCKWASHER, 1/2"	1
64	COM'L	LOCKWASHER, 3/8"	11
63	COM'L	FLAT WASHER, 5/16"	1
62	COM'L	STARWASHER, 1/2"	3
61	COM'L	STARWASHER, 6/16"	1
60	COM'L	FLATWASHER, 3/8"	4
59	COM'L	FLATWASHER, 3/8"	2
58	COM'L	BOLT, HX. 3/4"-16 NF x 6	2
57	COM'L	BOLT, HX. 1/2"-13 NC x 4"	2
56	COM'L	BOLT, HX. 1/2"-13 NC x 3/4"	3
55	COM'L	BOLT, HX. 3/8"-16 NC x 5"	2
54	COM'L	BOLT, HX. 3/8"-16 NC x 3 1/2"	3
53	COM'L	BOLT, HX. 3/8"-16 NC x 3"	2
52	COM'L	BOLT, HX. 3/8"-16 NC x 3/4"	1
51	COM'L	COTTER PIN, 1/8" x 1 3/8"	3
50	COM'L	COTTER PIN, 1/8" x 1"	2
49	P20154	CAPSCREW, SOCKET HD.	4
48	P20152	CAPSCREW, SOCKET HD.	4
47	16369A	NUT, BOOM CYL. ROD	1
46	13599A	BOSS, BOOM CYL ROD	1
45	16257A	SLIDE PLATE, LOWER	2
44	16256A	SLIDE PLATE, UPPER	2
43	16250A	PIN, VERTICAL, REAR	2
42	16249A	SHAFT, SHEAVE MOUNT	3
41	P18838	RETAING RING, 2"	2
40	P18840	SNAP RING, 7/8"	2
39	P18839	SNAP RING, 5/8"	4
38	P18829	SHEAVE	3
37	P18828	ROLLER, REAR	2
36	P18827	ROLLER, FRONT	4
35	16265A	ROD, WIRE TIGHTENER	1
34	P19259	WIRE CLIP	4
33	P19258	THIMBLE	3
32	P19257	WIRE ROPE, 3/16" DIA.	34'
31	18405B	COVER PLATE	1
30	15765A	SLIDE PLATE, REAR	2
29	15774A	SLIDE PLATE, FRONT	1
28	15886A	SLIDE PLATE, BASE	1
27	16362A	SHIM, OUTER BOOM, 1/8"	A/R
26	16361A	SHIM, OUTER BOOM, 1/16"	A/R
25	17962B	SHIM, INNER BOOM, 16 GA.	A/R
24	15764A	SHIM, INNER BOOM, 12 GA.	A/R
23	P20431	SPACER WASHER	A/R
22	17965C	SHEAVE, AUX. LINE	1
21	15816C	SHEAVE	1
20	P16611	GREASE ZERK	4
19	15969B	ROLLER	4
18	16678A	SHAFT, INNER BOOM	1
17	15907B	SHAFT, MAIN PIVOT	1
16	P18830	BUSHING, SELF-ALIGN	2
15	P20393	BUSHING, ROLLER	4
14	P19109	BUSHING, CARR. SHAFT	2
13	P19108	BUSHING, TILT CYL.	1
12	P19106	BUSHING, CARR. TILT CYL.	2
11	18634A	PIN, TILT CYL. TO BOOM	1
10	16387A	PIN, UPPER HOIST CYL.	2
9	15769A	PIN, FRONT TILT CYL.	1
8	15723A	PIN, BOOM TO CARR.	1
7	17188B	ROLLER SHAFT	2
6	16266B	REAR SHEAVE	1
5	18203D	HOSE REEL	1
4	18410B	BASE SUPPORT	1
3	21361C	FRONT SUPPORT	1
2	18008R	INNER BOOM	1
1	18075R	OUTER BOOM	1

LULL Engineering Co., Inc.
ST. PAUL, MINNESOTA 55121

DRAWN BY: Jeff Kent

S/N 1041 THRU

DRAWING TITLE: TELESCOPIC BOOM ASSEMBLY MODEL 844

REQD.

SCALE: D

DRAWING NO. 16806-2

NOTES:
A) FOR S/N 101-684 USE P20872

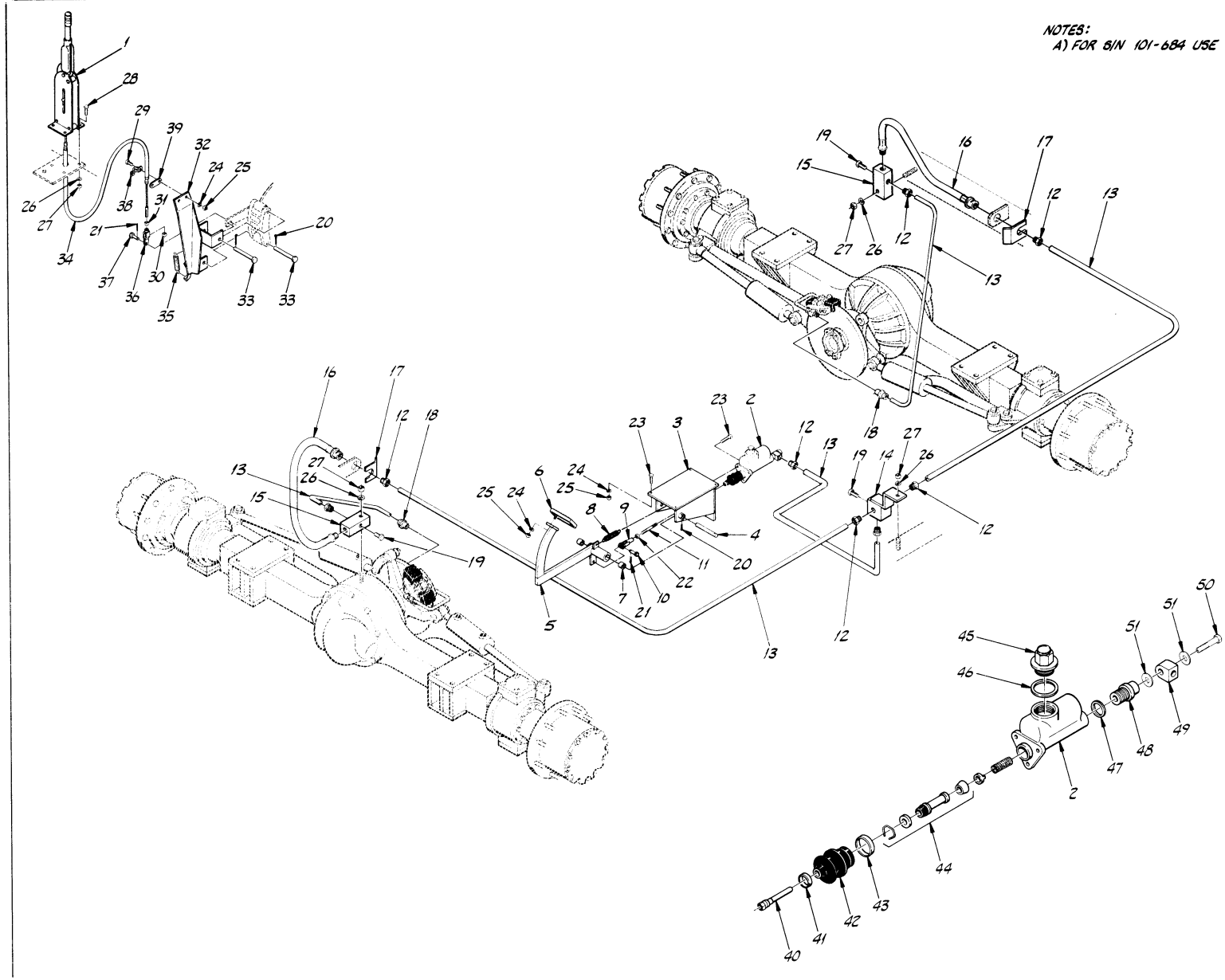

ITEM	PART NO.	DESCRIPTION	REQ.
51	P12506	FLATWASHER, COPPER	2
50	P21692	BOLT, HOLLOW	1
49	P21691	FITTING, BRASS	1
48	P21690	OUTLET ADAPTOR	1
47	P21689	GASKET, OUTLET	1
46	P21688	GASKET, FILL PLUG	1
45	P21687	FILLER PLUG	1
A) 44	P20900	REBUILD KIT →	1
43	P20871	RETAINING RING, LARGE	1
42	P20868	RUBBER BOOT	1
41	P20870	RETAINING RING, SMALL	1
40	P20869	PUSH ROD	1
39	P17596	SHIM	1
38	P17595	CLAMP	1
37	P15392	CLEVIS PIN	1
36	P17594	CLEVIS	1
35	P10581	SPRING	1
34	P18127	CABLE	1
33	16614A	PIN, MOUNT	2
32	16609D	ANCHOR BRACKET	1
31	COM'L	JAM NUT, 3/8"-24	1
30	COM'L	NUT, HX. 3/8"-24	1
29	COM'L	BOLT, HX. 3/8"-16 NC × 1 1/4"	2
28	COM'L	BOLT, HX. 5/16"-18 NC × 1"	4
27	COM'L	NUT, HX 5/16"-18	7
26	COM'L	LOCKWASHER, 5/16"	7
25	COM'L	NUT, HX 3/8"-16	10
24	COM'L	LOCKWASHER, 3/8"	10
23	COM'L	BOLT, HX 3/8"-16 NC × 1"	7
22	COM'L	JAM NUT, 7/16"-20	1
21	COM'L	COTTER PIN, 3/32" × 1"	2
20	COM'L	COTTER PIN, 3/16" × 1 1/2"	3
19	P15293	PLUG	3
18	P15310	CONNECTOR	2
17	P11715	CLIP	2
16	P11705	BRAKE HOSE	2
15	P15303	JUNCTION BLOCK	2
14	P16676	TEE BLOCK	1
13	P17898	TUBING, 1/4	A/R
12	P15294	CONNECTOR	8
11	15676A	BRAKE ROD	1
10	P10053	CLEVIS PIN	1
9	P19081	CLEVIS	1
8	P10581	SPRING	1
7	P20391	BUSHING	2
6	P17733	FOOT PAD	1
5	17713B	BRAKE PEDAL	1
4	17712A	PIVOT PIN	1
3	16729C	MOUNTING BRACKET	1
2	P20886	MASTER CYLINDER	1
1	P17604	HAND BRAKE	1

LULL 5/64 Engineering Co., Inc.
ST. PAUL, MINNESOTA 55121

DRAWN BY J DAUB

S/N 101 - 1081

DRAWING TITLE
DISC BRAKE ASSEMBLY
MODEL 844

D

16810

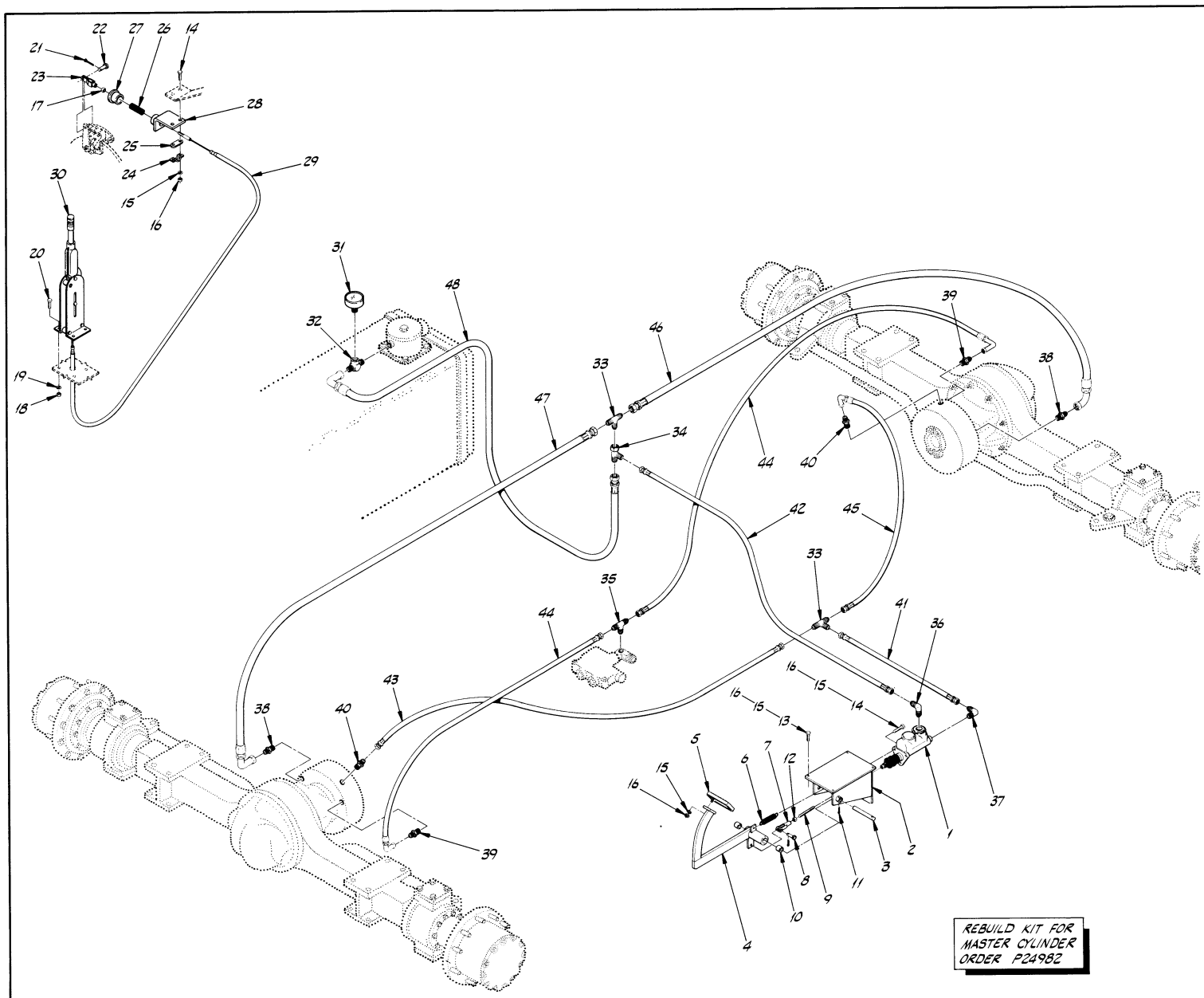

ITEM	PART NO.	DESCRIPTION	REQ.
48	P24624	HYD HOSE .38"x 81"	1
47	P24620	HYD HOSE .38"x 78"	1
46	P24619	HYD HOSE .38"x 62"	1
45	P24618	HYD HOSE .25"x 70"	1
44	P24617	HYD HOSE .25"x 70"	2
43	P24625	HYD HOSE .25"x 72"	1
42	P24630	HYD HOSE .25"x 56"	1
41	P19958	HYD HOSE .25"x 29"	1
40	P24612	CONNECTOR, O-RING	2
39	P18960	CONNECTOR, O-RING	2
38	P18936	CONNECTOR, O-RING	2
37	P19726	90° ELBOW	1
36	P18945	90° ELBOW	1
35	P24611	TEE	1
34	P19412	TEE, SWIVEL	1
33	P18942	TEE, BULKHEAD	2
32	P24613	TEE	1
31	P24981	PRESSURE GAUGE	1
30	P17604	HAND BRAKE	1
29	P17592	BRAKE CABLE	1
28	21071A	SPRING BASE MOUNT	1
27	21065A	SPRING RETAINER	1
26	P24302	SPRING CABLE	1
25	P17596	SHIM	1
24	P17595	CLAMP	1
23	P10193	CLEVIS	1
22	P20833	CLEVIS PIN	1
21	COM'L	COTTER PIN, 1/8"x 1"	1
20	COM'L	BOLT, HX. 5/16"-18 x 1"	4
19	COM'L	LOCKWASHER, 5/16"	4
18	COM'L	NUT, HX. 5/16"-18	4
17	COM'L	NUT, HX. 3/8"-24	1
16	COM'L	NUT, HX. 3/8"-16	10
15	COM'L	LOCKWASHER, 3/8"	10
14	COM'L	BOLT, HX. 3/8"-16 x 1"	5
13	COM'L	BOLT, HX. 3/8"-16 x 3/4"	4
12	COM'L	JAM NUT, HX. 7/16"-20	1
11	COM'L	COTTER PIN, 3/16"x 1 1/2"	2
10	P20391	BUSHING	2
9	15676A	BRAKE ROD	1
8	P10053	CLEVIS PIN	1
7	P19081	CLEVIS	1
6	P10581	SPRING	1
5	P17733	FOOT PAD	1
4	21423B	BRAKE PEDAL	1
3	17712A	PIVOT PIN	1
2	21420C	MOUNTING BRACKET	1
1	P24961	MASTER CYLINDER	1

LULL Engineering Co., Inc.
ST. PAUL, MINNESOTA 55121

DRAWN BY: Jeff Dick

S/N 1082 THRU

DRAWING TITLE: BRAKE ASSEMBLY MODEL 844

SCALE: D

DRAWING NO. 16810-1

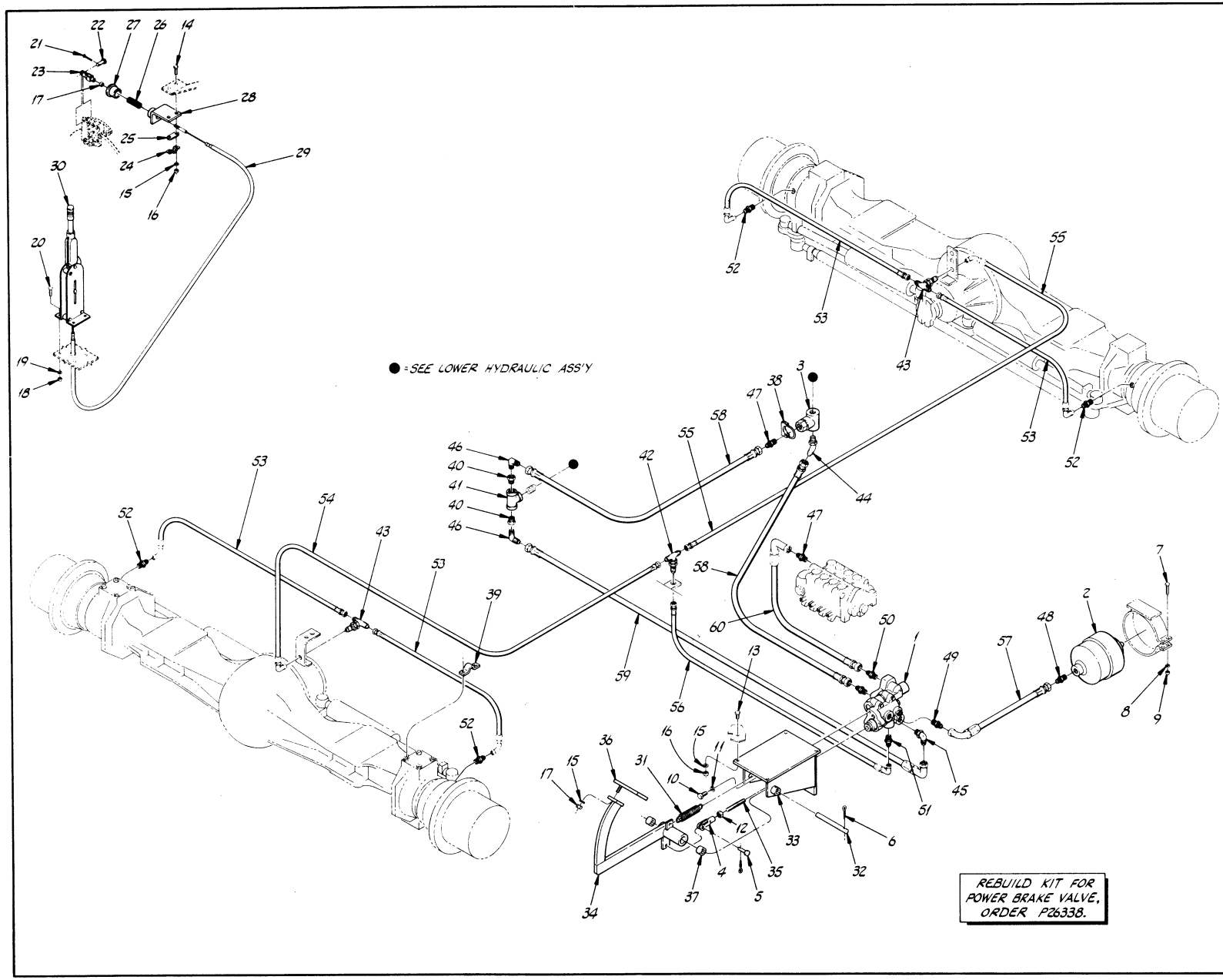

ITEM	PART NO.	DESCRIPTION	REQ.
60	P26615	HYD HOSE .75"x28"	1
59	P26612	HYD HOSE .75"x39"	1
58	P26611	HYD HOSE .75"x43"	2
57	P21245	HYD HOSE .50"x10"	1
56	P18095	HYD HOSE .38"x32"	1
55	P24682	HYD HOSE .25"x58"	1
54	P26123	HYD HOSE .25"x74"	1
53	P26617	HYD HOSE .25"x45"	4
52	P24991	ADAPTOR, SPECIAL	-
51	P21906	CONNECTOR, O-RING	1
50	P19765	CONNECTOR	2
49	P18997	CONNECTOR	1
48	P18944	CONNECTOR	1
47	P17805	CONNECTOR, O-RING	2
46	P17808	90° ELBOW, PIPE-JIC	2
45	P17802	90° ELBOW, O-RING	1
44	P19147	45° ELBOW, O-RING	1
43	P26099	TEE, BULKHEAD	2
42	P18942	TEE, BULKHEAD	1
41	P10173	TEE, PIPE	1
40	P10180	REDUCER BUSHING	2
39	24190A	CLAMP, BRAKE HOSE	4
38	P13605	CLAMP	1
37	P20391	BUSHING	2
36	P17733	FOOT PAD	1
35	20834A	BRAKE ROD	1
34	20830B	BRAKE PEDAL	1
33	20829C	MOUNTING BRACKET	1
32	17712A	PIVOT PIN	1
31	P10581	SPRING	1
30	P17604	HAND BRAKE	1
29	P17592	BRAKE CABLE	1
28	21071A	SPRING BASE MOUNT	1
27	21065A	SPRING RETAINER	1
26	P24302	SPRING CABLE	1
25	P17596	SHIM	1
24	P17595	CLAMP	1
23	P10193	CLEVIS	1
22	P20833	CLEVIS PIN	1
21	P03838	COTTER PIN, 1/8"x1"	1
20	P00104	BOLT, HX. 5/16"-18 x 1"	4
19	P01309	LOCKWASHER, 5/16"	4
18	P01507	NUT, HX. 5/16"-18	4
17	P01531	NUT, HX. 3/8"-24	2
16	P01508	NUT, HX. 3/8"-16	6
15	P01310	LOCKWASHER, 3/8"	7
14	P00204	BOLT, HX. 3/8"-16 x 1"	2
13	P00202	BOLT, HX. 3/8"-16 x 3/4"	4
12	P01582	JAM NUT, HX. 7/16"-20	1
11	P01311	LOCKWASHER, 7/16"	3
10	P00352	BOLT, HX. 7/16"-20 x 1"	3
9	P01506	NUT, HX. 1/4"-20	2
8	P01308	LOCKWASHER, 1/4"	2
7	P00007	BOLT, HX. 1/4"-20 x 1 1/2"	2
6	P03865	COTTER PIN, 3/16"x1 1/2"	2
5	P10053	CLEVIS PIN	1
4	P19081	CLEVIS	1
3	P26016	TEE RELIEF VALVE	1
2	P26017	ACCUMULATOR	1
1	P26018	POWER BRAKE VALVE	1

LULL Engineering Co., Inc. — ST. PAUL, MINNESOTA 55121

DRAWN BY: DAVE STAHL

S/N 1722, 1724 THRU

DRAWING TITLE: FOOT & HAND BRAKE ASSEMBLY MODEL 844

SCALE: D

DRAWING NO. 16810-2

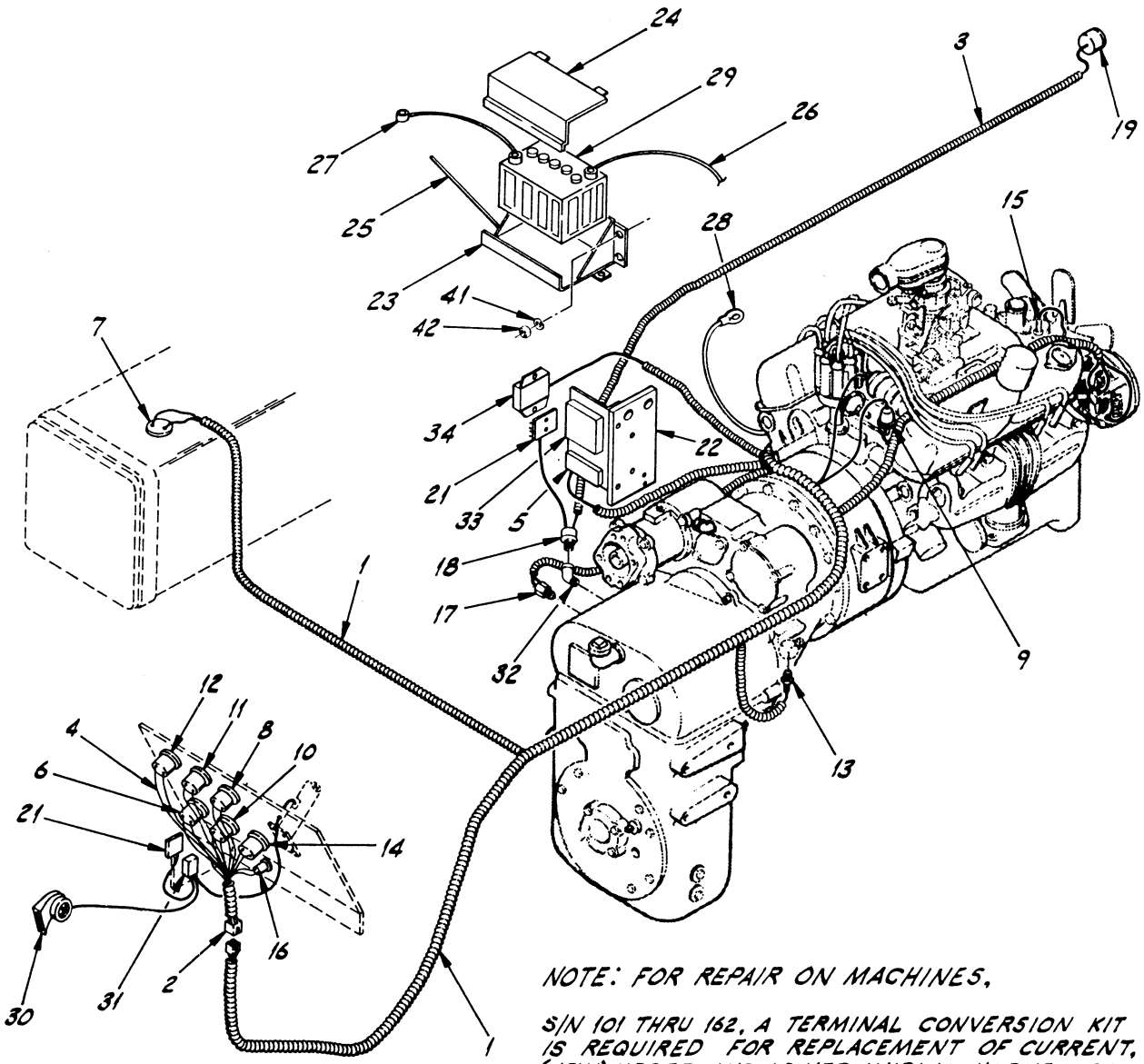

NOTE: FOR REPAIR ON MACHINES,

S/N 101 THRU 162, A TERMINAL CONVERSION KIT IS REQUIRED FOR REPLACEMENT OF CURRENT, (NEW) UPPER AND LOWER WIRING HARNESSES.
16567B LOWER TERMINAL CONVERSION KIT
16567-1B UPPER TERMINAL CONVERSION KIT

S/N 101 THRU 219 GAUGES AND SENDERS MUST BE PURCHASED TOGETHER.

ITEM	PART NO.	DESCRIPTION	REQ.
42	COM'L	NUT, HX 3/8-16 NC	4
41	COM'L	LOCKWASHER, 3/8	4
40	COM'L	NUT, HX 10-24 NC	4
39	COM'L	LOCKWASHER, #10	4
38	COM'L	CAPSCREW, R.H. 10-24x1/2	4
37	P19830	HARNESS, VOLT. REG.	1
36	P19829	HARNESS, ELEC. IGN.	1
35	P19749	HARNESS, DISTRIBUTOR	1
34	P19204	VOLTAGE REGULATOR	1
33	P19722	ELECTRONIC IGNITION	1
32	P15093	45° ELBOW	1
31	P13709	HORN RELAY	1
30	P13707	HORN	1
29	P11056	BATTERY, 12 VOLT	1
28	P19835	BATTERY CABLE, GRD.	1
27	P16691	BATTERY CABLE, NEG	1
26	P18182	BATTERY CABLE, POS	1
25	15594A	HOLD DOWN ROD	2
24	16203B	COVER, BATTERIES	1
23	16202C	BATTERY BOX	1
22	17753A	FUSE MOUNT BRKT.	1
21	P19096	FUSE BLOCK	2
20	P19103	FUSE, SFE 30 AMP	4
19	P13774	BACK-UP ALARM	1
18	P19105	SWITCH, BACK-UP	1
17	P18673	SWITCH, NET. START	1
16	P12634	SWITCH, IGNITION	1
15	P18813	SENDER, WATER TEMP.	1
14	P18735	GAUGE, WATER TEMP.	1
13	P19472	SENDER, TRANS. OIL	1
12	P18734	GAUGE, TRANS. OIL	1
11	P18733	GAUGE, HOURMETER	1
10	P18732	GAUGE, AMMETER	1
9	P18731	SENDER, OIL PRESS.	1
8	P18730	GAUGE, OIL PRESS.	1
7	P18729	SENDER, FUEL	1
6	P18728	GAUGE, FUEL	1
5	P19750	RESISTOR	1
4	P19284	HARNESS, GAUGE-GND.	1
3	P19102	HARNESS, BACK-UP	1
2	P19099	HARNESS, UPPER	1
1	P19100	HARNESS, LOWER	1

LULL Engineering Co., Inc. ST. PAUL, MINNESOTA 55121

DRAWN BY J DAUB

S/N 101 THRU

DRAWING TITLE
WIRING HARNESS ASSEMBLY
MODEL 844

CHRYS

SCALE C

DRAWING NO. 16811

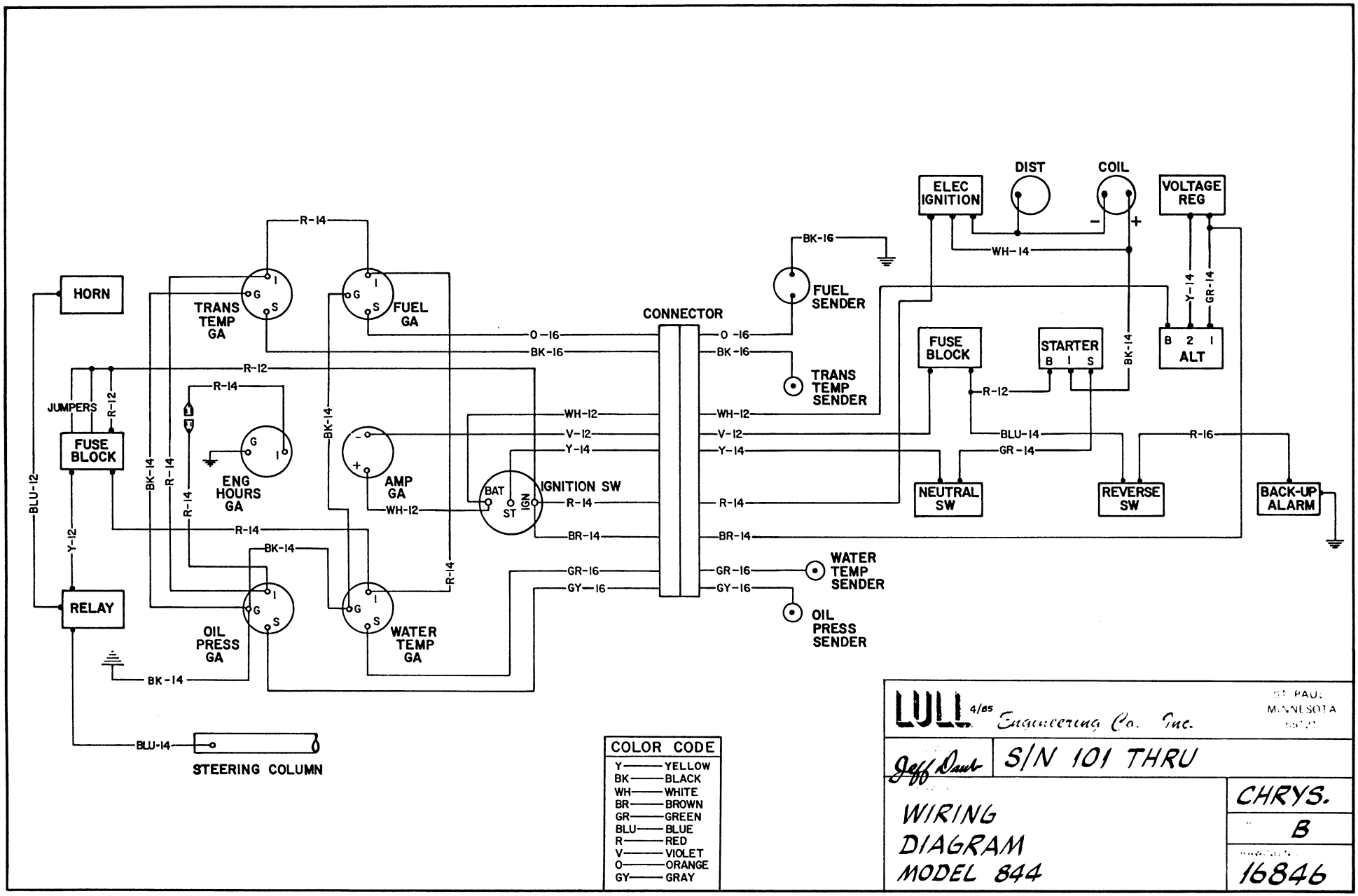

COLOR CODE	
Y	YELLOW
BK	BLACK
WH	WHITE
BR	BROWN
GR	GREEN
BLU	BLUE
R	RED
V	VIOLET
O	ORANGE
GY	GRAY

LULL 4/85 Engineering Co. Inc.

ST. PAUL MINNESOTA

Jeff Dark

S/N 101 THRU

WIRING DIAGRAM MODEL 844

CHRYS.

B

16846

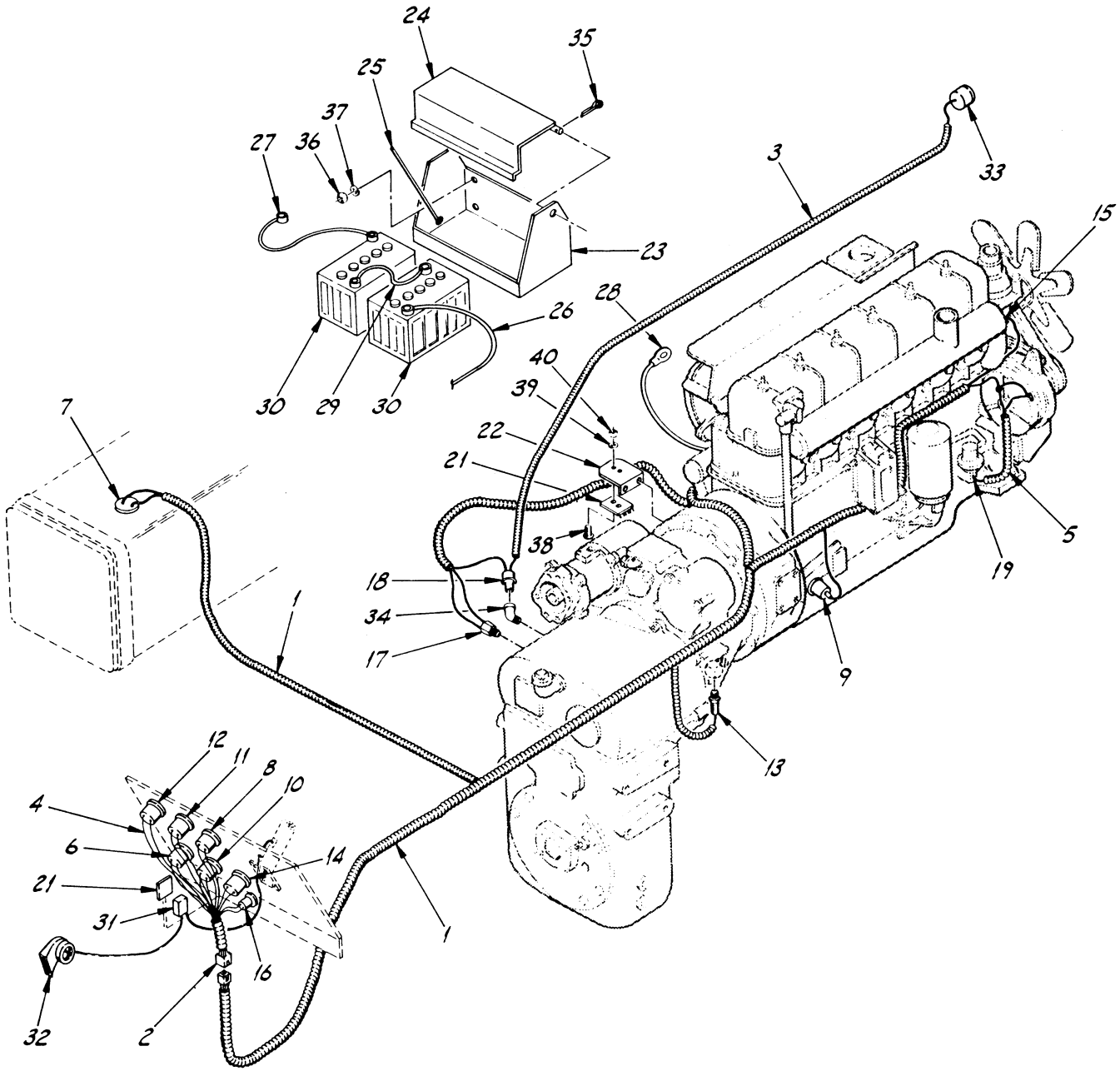

ITEM	PART NO.	DESCRIPTION	REQ.
40	COM'L	NUT, HX 10-24 NC	4
39	COM'L	LOCKWASHER, # 10	4
38	COM'L	CAPSCREW, R.H. 10-24 × 1/2	4
37	COM'L	LOCKWASHER, 3/8	4
36	COM'L	NUT, HX 3/8-16 NC	4
35	COM'L	COTTER PIN, 3/32 × 5/8	4
34	P15093	45° ELBOW	1
33	P13774	BACK-UP ALARM	1
32	P13707	HORN	1
31	P13709	HORN RELAY	1
30	P19076	BATTERY, 6 VOLT	2
29	P18122	BATTERY CABLE, C.B.	1
28	P19835	BATTERY CABLE, GND.	1
27	P19834	BATTERY CABLE, NEG.	1
26	P19833	BATTERY CABLE, POS.	1
25	16357A	HOLD DOWN ROD	2
24	16355B	COVER, BATTERIES	1
23	16344C	BATTERY BOX	1
22	16273A	FUSE MOUNT BRKT	1
21	P19096	FUSE BLOCK	2
20	P19103	FUSE, SFE 30 AMP	4
19	P20888	SWITCH, ALTERNATOR	1
18	P19105	SWITCH, BACK-UP	1
17	P18673	SWITCH, NEUTRAL	1
16	P11092	SWITCH, IGNITION	1
15	P18813	SENDER, WATER TEMP.	1
14	P18735	GAUGE, WATER TEMP.	1
13	P19472	SENDER, TRANS. OIL	1
12	P18734	GAUGE, TRANS. OIL	1
11	P18733	GAUGE, HOURMETER	1
10	P18732	GAUGE, AMMETER	1
9	P18731	SENDER, OIL PRESS.	1
8	P18730	GAUGE, OIL PRESS.	1
7	P18729	SENDER, FUEL	1
6	P18728	GAUGE, FUEL	1
5	P19529	HARNESS, SWITCH - ALT.	1
4	P19284	HARNESS, GAUGES - GND.	1
3	P19102	HARNESS, BACK-UP	1
2	P19099	HARNESS, UPPER	1
1	P19435	HARNESS, LOWER	1

LULL 8/02 Engineering Co., Inc.
ST. PAUL, MINNESOTA 55121

DRAWN BY J DAUB

S/N 220-886

DRAWING TITLE
WIRING HARNESS ASSEMBLY MODEL 844

WAUK

SCALE C

DRAWING NO. 16812

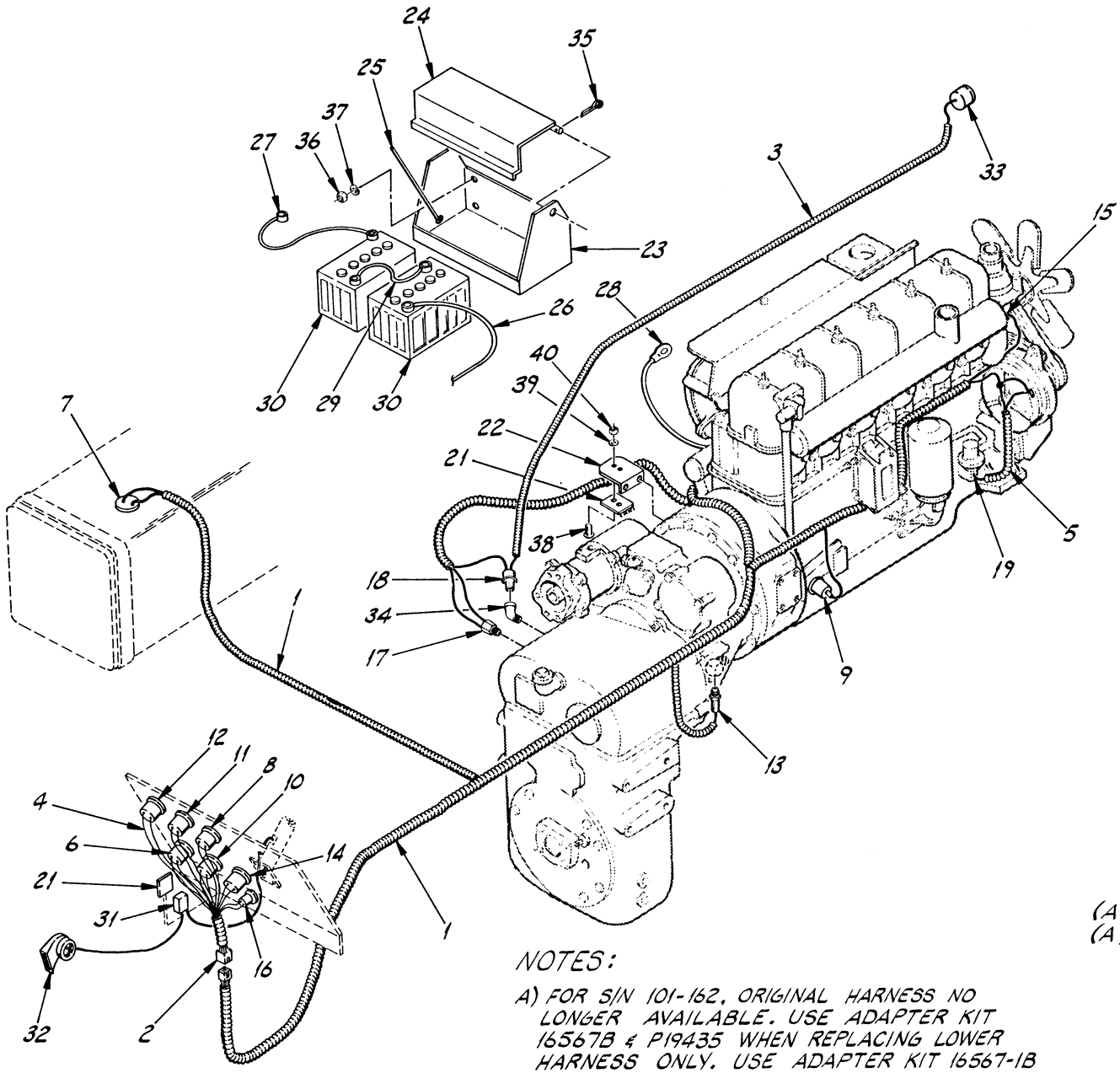

ITEM	PART NO.	DESCRIPTION	REQ.
40	COM'L	NUT, HX #10-24	4
39	COM'L	LOCKWASHER, # 10	4
38	COM'L	CAPSCREW, R.H. #10-24 × 1/2"	4
37	COM'L	LOCKWASHER, 3/8"	4
36	COM'L	NUT, HX 3/8"-16	4
35	COM'L	COTTER PIN, 3/32" × 5/8"	4
34	P10215	45° ELBOW, STREET	1
33	P13774	BACK-UP ALARM	1
32	P13707	HORN	1
31	P13709	HORN RELAY	1
30	P18121	BATTERY, 6 VOLT	2
29	P18122	BATTERY CABLE, C.B.	1
28	P19835	BATTERY CABLE, GND.	1
27	P19834	BATTERY CABLE, NEG.	1
26	P19833	BATTERY CABLE, POS.	1
25	16357A	HOLD DOWN ROD	2
24	16355B	COVER, BATTERIES	1
23	16344C	BATTERY BOX	1
22	16273A	FUSE MOUNT BRKT	1
21	P19096	FUSE BLOCK	2
20	P19103	FUSE, SFE 30 AMP	4
19	P20888	SWITCH, ALTERNATOR	1
18	P19105	SWITCH, BACK-UP	1
17	P18673	SWITCH, NEUTRAL	1
16	P11092	SWITCH, IGNITION	1
15	P23222	SENDER, WATER TEMP.	1
14	P23221	GAUGE, WATER TEMP.	1
13	P19472	SENDER, TRANS. OIL	1
12	P23220	GAUGE, TRANS. OIL	1
11	P23219	GAUGE, HOURMETER	1
10	P23218	GAUGE, AMMETER	1
9	P23217	SENDER, OIL PRESS.	1
8	P23216	GAUGE, OIL PRESS.	1
7	P23215	SENDER, FUEL	1
6	P23214	GAUGE, FUEL	1
5	P19529	HARNESS, SWITCH-ALT.	1
4	P19284	HARNESS, GND.-GAUGES	1
3	P19102	HARNESS, BACK-UP	1
(A) 2	P19099	HARNESS, UPPER	1
(A) 1	P19435	HARNESS, LOWER	1

NOTES:

A) FOR S/N 101-162, ORIGINAL HARNESS NO LONGER AVAILABLE. USE ADAPTER KIT 16567B & P19435 WHEN REPLACING LOWER HARNESS ONLY. USE ADAPTER KIT 16567-1B & P19099 WHEN REPLACING UPPER HARNESS. ADAPTER KITS NOT NEEDED WHEN REPLACING BOTH HARNESSES.

LULL Engineering Co., Inc. ST. PAUL, MINNESOTA 55121

DRAWN BY J DAUB

S/N 101-219, 887 THRU

DRAWING TITLE: WIRING HARNESS ASSEMBLY MODEL 844

WAUK

SCALE C

DRAWING NO. 16812-2

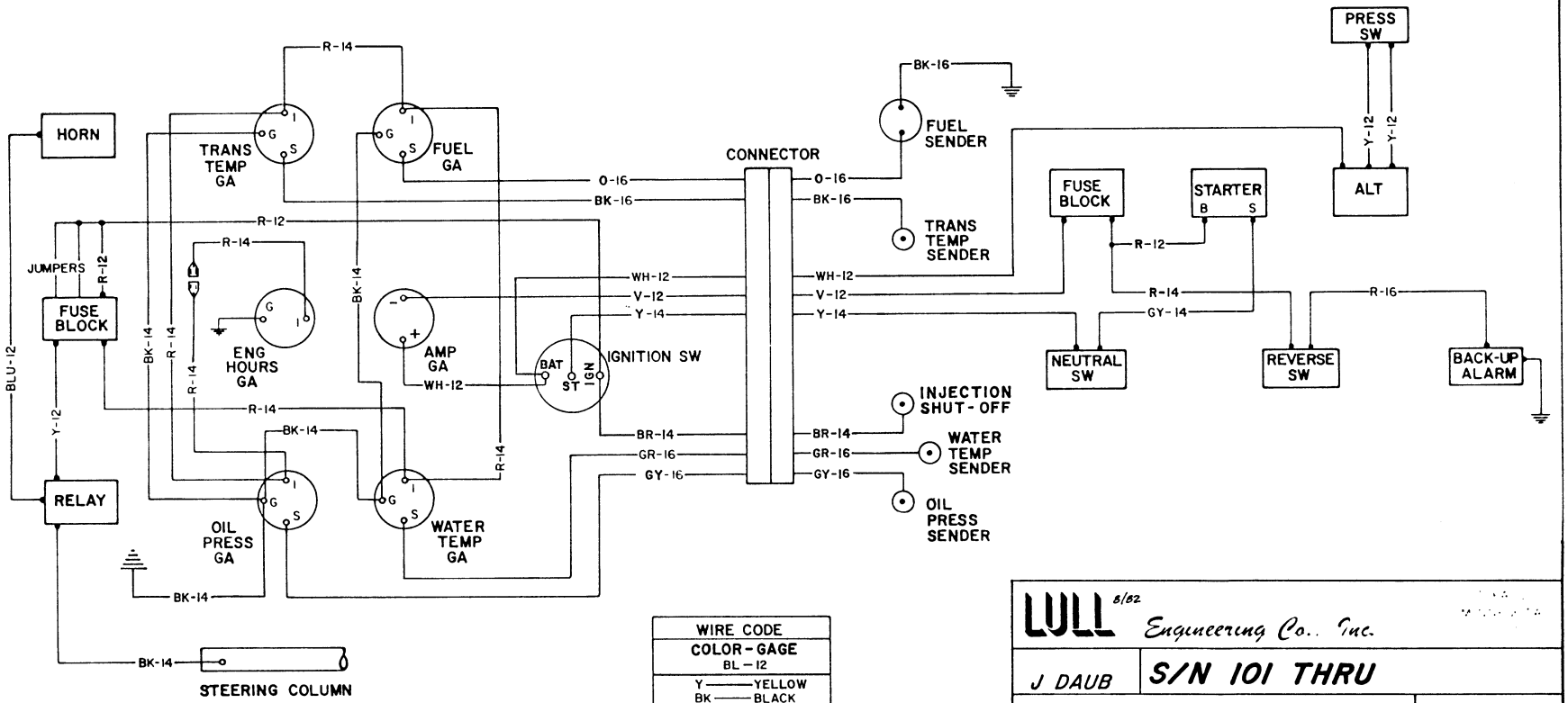

WIRE CODE	
COLOR-GAGE	
BL-12	
Y	YELLOW
BK	BLACK
WH	WHITE
BR	BROWN
GR	GREEN
BL	BLUE
R	RED
V	VIOLET
O	ORANGE
GY	GRAY

LULL 8/62 Engineering Co., Inc.

J DAUB

S/N 101 THRU

WIRING DIAGRAM

MODEL 844

WAUK.

B

16847

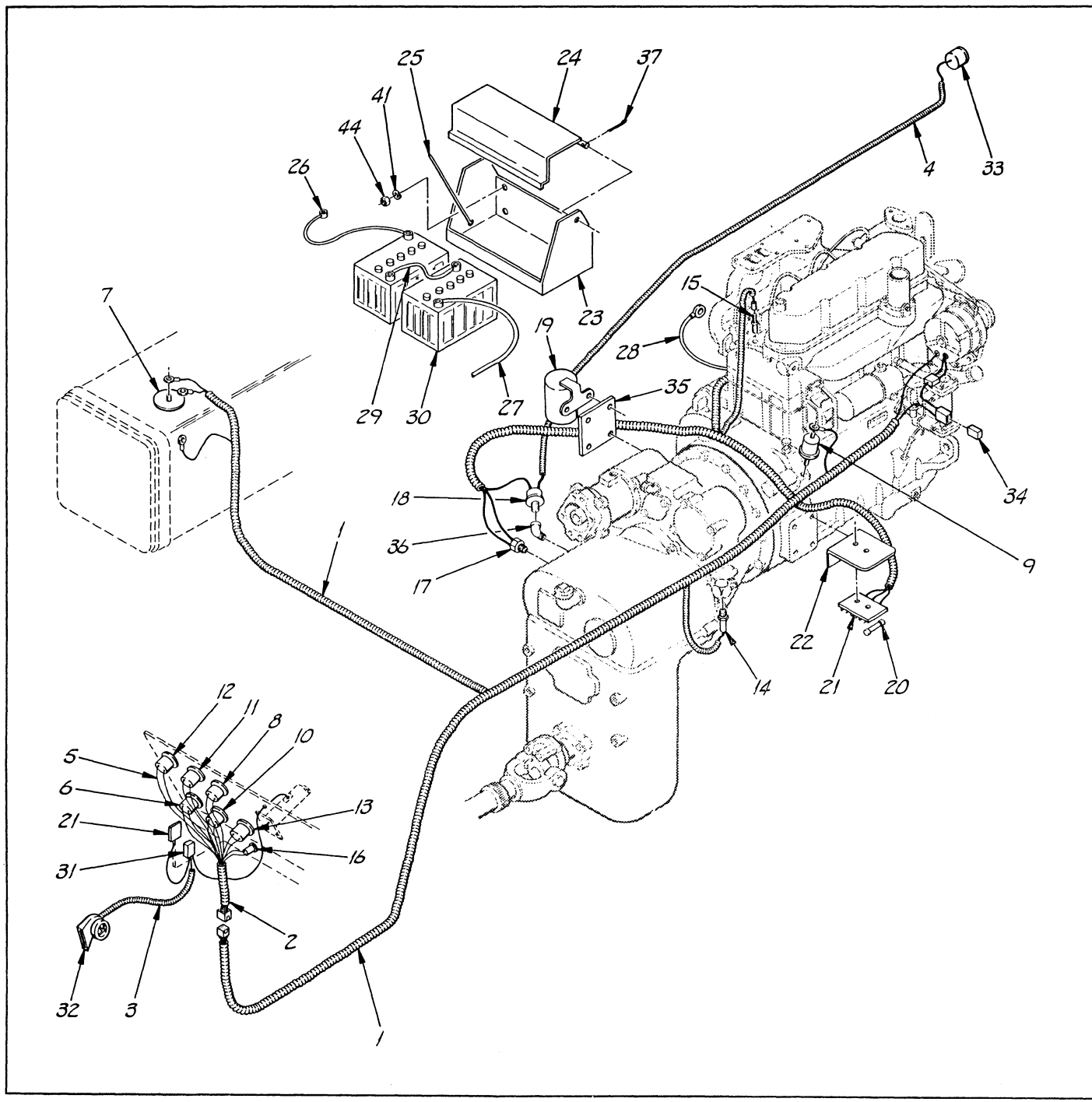

ITEM	PART NO.	DESCRIPTION	REQ.
44	COM'L	NUT, HX. 3/8"-16 NC	4
43	COM'L	NUT, HX. 1/4"-20 NC	2
42	COM'L	LOCKWASHER, 1/2"	4
41	COM'L	LOCKWASHER, 3/8"	4
40	COM'L	LOCKWASHER, 1/4"	2
39	COM'L	BOLT, HX. 1/2"-13 NC × 1"	4
38	COM'L	BOLT, HX. 1/4"-20 NC × 1/2"	2
37	COM'L	COTTER PIN, 3/32" × 3/4"	2
36	P10215	45° ELBOW	1
35	18320A	MOUNT, STARTER RELAY	1
34	P21787	DIODE MODULE	1
33	P13774	BACK-UP ALARM	1
32	P13707	HORN	1
31	P13709	HORN RELAY	1
30	P19076	BATTERY, 6 VOLT	2
29	P18122	BATTERY CABLE, C.B.	1
28	P19835	BATTERY CABLE, GND.	1
27	P19834	BATTERY CABLE, NEG.	1
26	P19833	BATTERY CABLE, POS.	1
25	16357A	HOLD DOWN ROD	2
24	16355B	COVER, BATTERY BOX	1
23	16344C	BATTERY BOX	1
22	16273A	BRACKET, FUSE MOUNT	1
21	P19096	FUSE BLOCK	2
20	P19103	FUSE, SFE 30 AMP	4
19	P21777	STARTER RELAY	1
18	P19105	SWITCH, BACK-UP	1
17	P18673	SWITCH, NEUTRAL	1
16	P11092	SWITCH, IGNITION	1
15	P18813	SENDER, WATER TEMP.	1
14	P19472	SENDER, TRANS. OIL	1
13	P18735	GAUGE, WATER TEMP.	1
12	P18734	GAUGE, TRANS. OIL	1
11	P18733	GAUGE, HOUR METER	1
10	P18732	GAUGE, AMMETER	1
9	P18731	SENDER, OIL PRESS.	1
8	P18730	GAUGE, OIL PRESS.	1
7	P18729	SENDER, FUEL	1
6	P18728	GAUGE, FUEL	1
5	P19284	HARNESS, GAUGES-GND.	1
4	P19102	HARNESS, BACK-UP	1
3	P19101	HARNESS, HORN	1
2	P19099	HARNESS, UPPER	1
1	P21780	HARNESS, LOWER	1

LULL Engineering Co., Inc. 9/81 — ST. PAUL, MINNESOTA 55121

DRAWN BY: Jeff Vaut

S/N 795 THRU

DRAWING TITLE: WIRING HARNESS ASSEMBLY MODEL 844

DEERE

SCALE: C

DRAWING NO. 16812-1

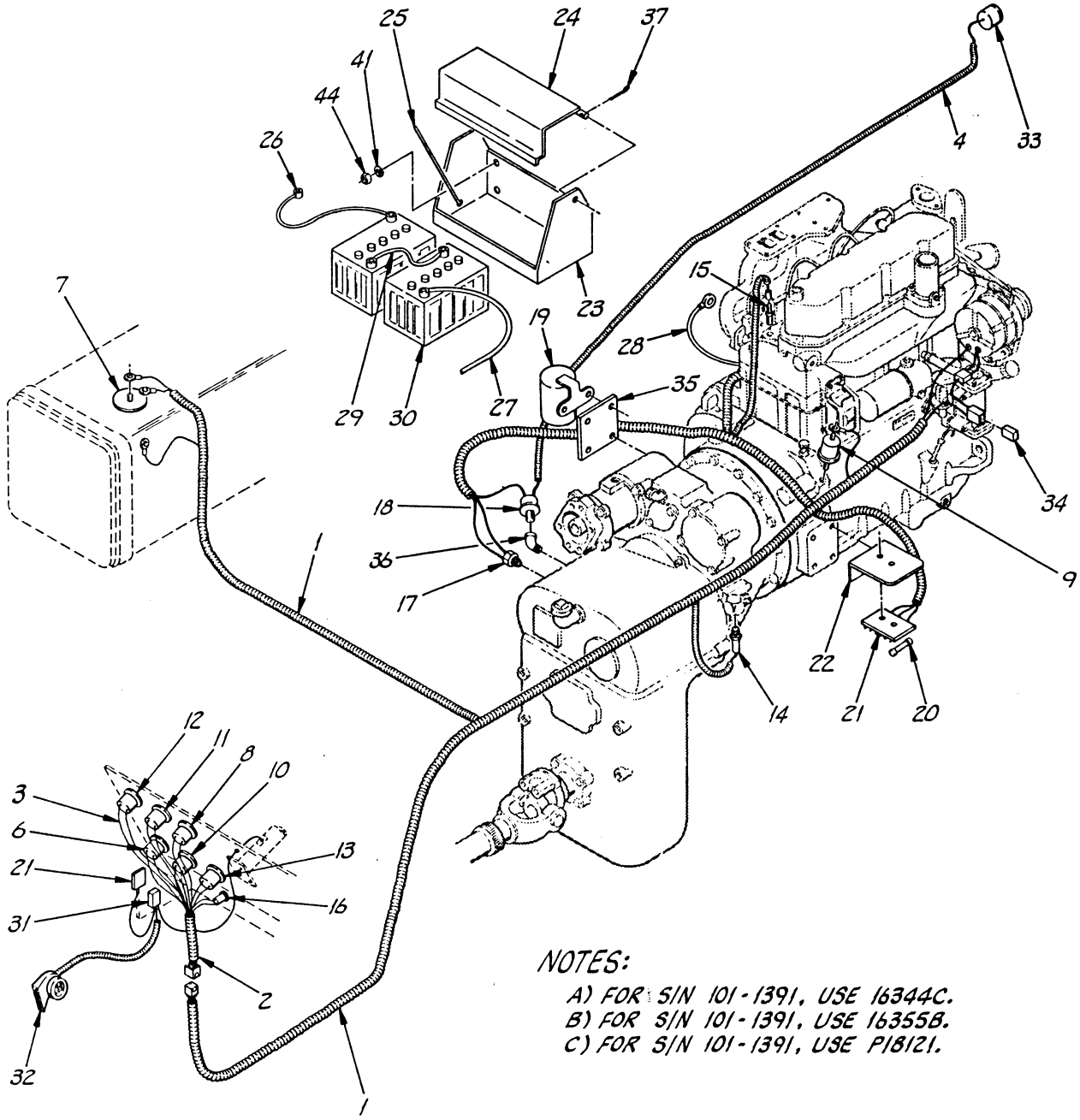

NOTES:

A) FOR S/N 101-1391, USE 16344C.
B) FOR S/N 101-1391, USE 16355B.
C) FOR S/N 101-1391, USE P18121.

	ITEM	PART NO.	DESCRIPTION	REQ.
	44	COM'L	NUT, HX. 3/8"-16	4
	43	COM'L	NUT, HX. 1/4"-20	2
	42	COM'L	LOCKWASHER, 1/2"	4
	41	COM'L	LOCKWASHER, 3/8"	4
	40	COM'L	LOCKWASHER, 1/4"	2
	39	COM'L	BOLT, HX. 1/2"-13 NC x 1"	4
	38	COM'L	BOLT, HX. 1/4"-20 NC x 1/2"	2
	37	COM'L	COTTER PIN, 3/32" x 3/4"	2
	36	P10215	45° ELBOW	1
	35	18320A	MOUNT, STARTER RELAY	1
	34	P21787	DIODE MODULE	1
	33	P13774	BACK-UP ALARM	1
	32	P13707	HORN	1
	31	P13709	HORN RELAY	1
(C)	30	P25385	BATTERY, 6 VOLT	2
	29	P18122	BATTERY CABLE, C.B.	1
	28	P19835	BATTERY CABLE, GND.	1
	27	P19834	BATTERY CABLE, NEG.	1
	26	P19833	BATTERY CABLE, POS.	1
	25	16357A	HOLD DOWN ROD	2
(B)	24	21976B	COVER, BATTERY BOX	1
(A)	23	21977C	BATTERY BOX	1
	22	16273A	BRACKET, FUSE MOUNT	1
	21	P19096	FUSE BLOCK	2
	20	P19103	FUSE, SFE 30 AMP	4
	19	P21777	STARTER RELAY	1
	18	P19105	SWITCH, BACK-UP	1
	17	P18673	SWITCH, NEUTRAL	1
	16	P11092	SWITCH, IGNITION	1
	15	P23222	SENDER, WATER TEMP.	1
	14	P19472	SENDER, TRANS. OIL	1
	13	P23221	GAUGE, WATER TEMP.	1
	12	P23220	GAUGE, TRANS. OIL	1
	11	P23219	GAUGE, HOUR METER	1
	10	P23218	GAUGE, AMMETER	1
	9	P23217	SENDER, OIL PRESS.	1
	8	P23216	GAUGE, OIL PRESS.	1
	7	P23215	SENDER, FUEL	1
	6	P23214	GAUGE, FUEL	1
	5			
	4	P19102	HARNESS, BACK-UP	1
	3	P19284	HARNESS, GND.-GAUGES	1
	2	P19099	HARNESS, UPPER	1
	1	P21780	HARNESS, LOWER	1

LULL Engineering Co., Inc.
ST. PAUL, MINNESOTA 55121

DRAWN BY Jeff Vault

S/N 882, 883, 887 THRU

DRAWING TITLE
WIRING HARNESS ASSEMBLY
MODEL 844

DEERE

SCALE C

DRAWING NO. 16812-3

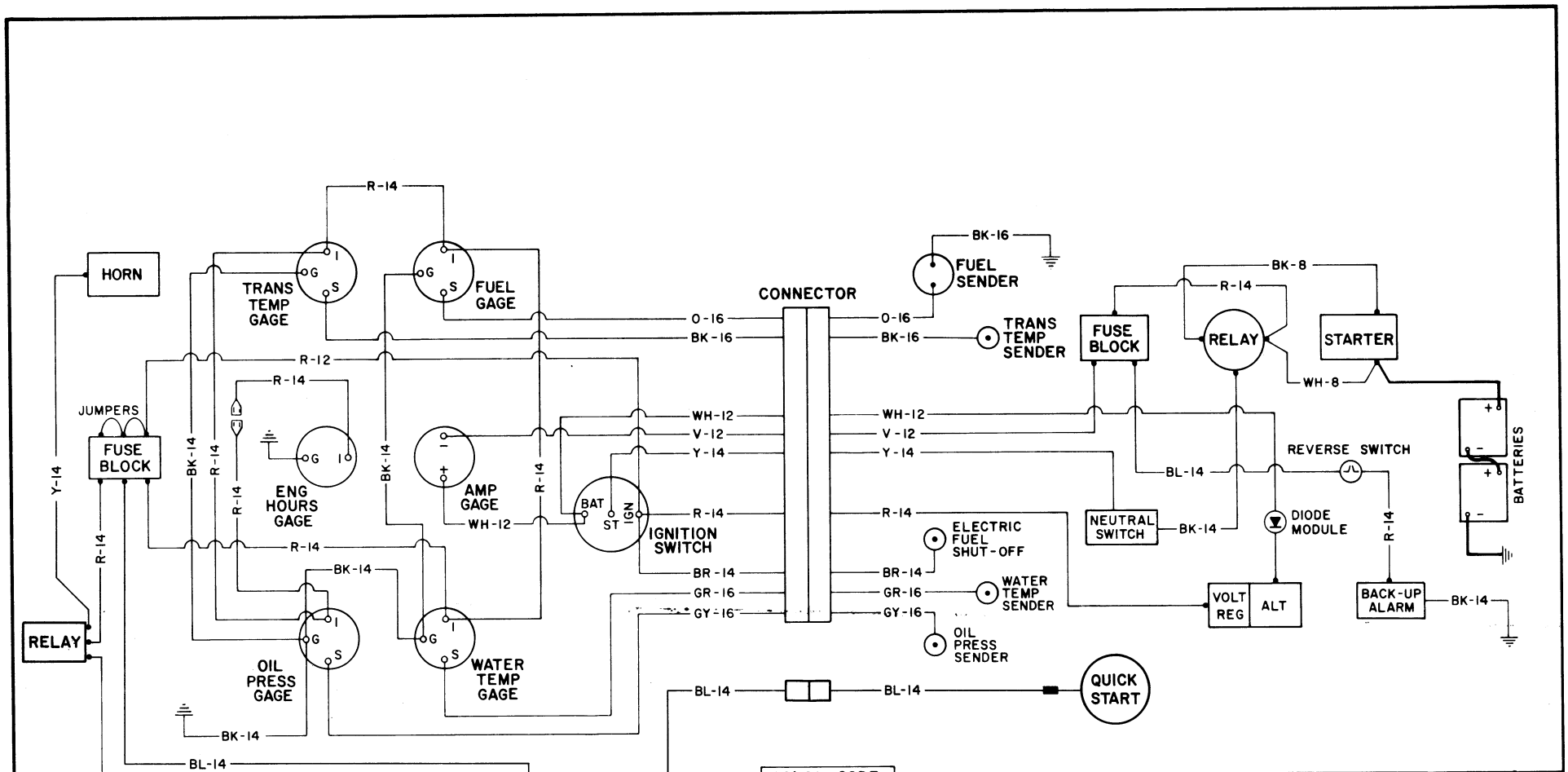

COLOR CODE	
Y	YELLOW
BK	BLACK
WH	WHITE
BR	BROWN
GR	GREEN
BL	BLUE
R	RED
V	VIOLET
O	ORANGE
GY	GRAY

LULL 10/83 Engineering Co., Inc.
ST. PAUL, MINNESOTA 55121

DRAWN BY: Jeff Daub

S/N 795 THRU

DRAWING TITLE: WIRING DIAGRAM MODEL 844

DEERE

SCALE: B

DRAWING NO. 16847-1

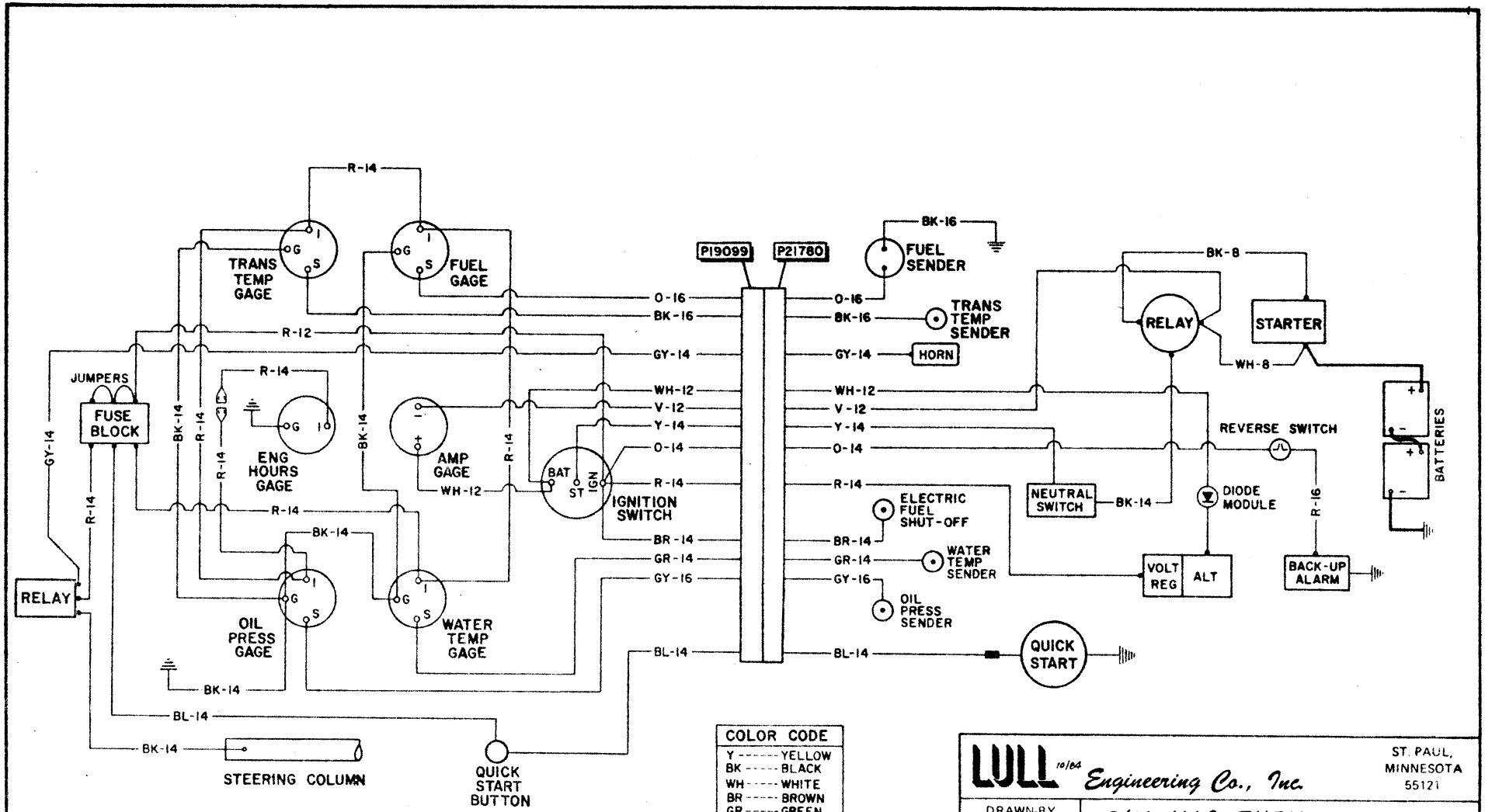

COLOR CODE	
Y	YELLOW
BK	BLACK
WH	WHITE
BR	BROWN
GR	GREEN
BL	BLUE
R	RED
V	VIOLET
O	ORANGE
GY	GRAY

LULL 10/84 Engineering Co., Inc.
ST. PAUL, MINNESOTA 55121

DRAWN BY Jeff Daub

S/N 1110 THRU

DRAWING TITLE
WIRING DIAGRAM MODEL 844

DEERE

SCALE B

DRAWING NO. 16847-2

NOTES:

A) MACHINES EQUIPED WITH ENGINE COLD START, USE P24766.

B) FOR S/N 101-416, USE P14652.

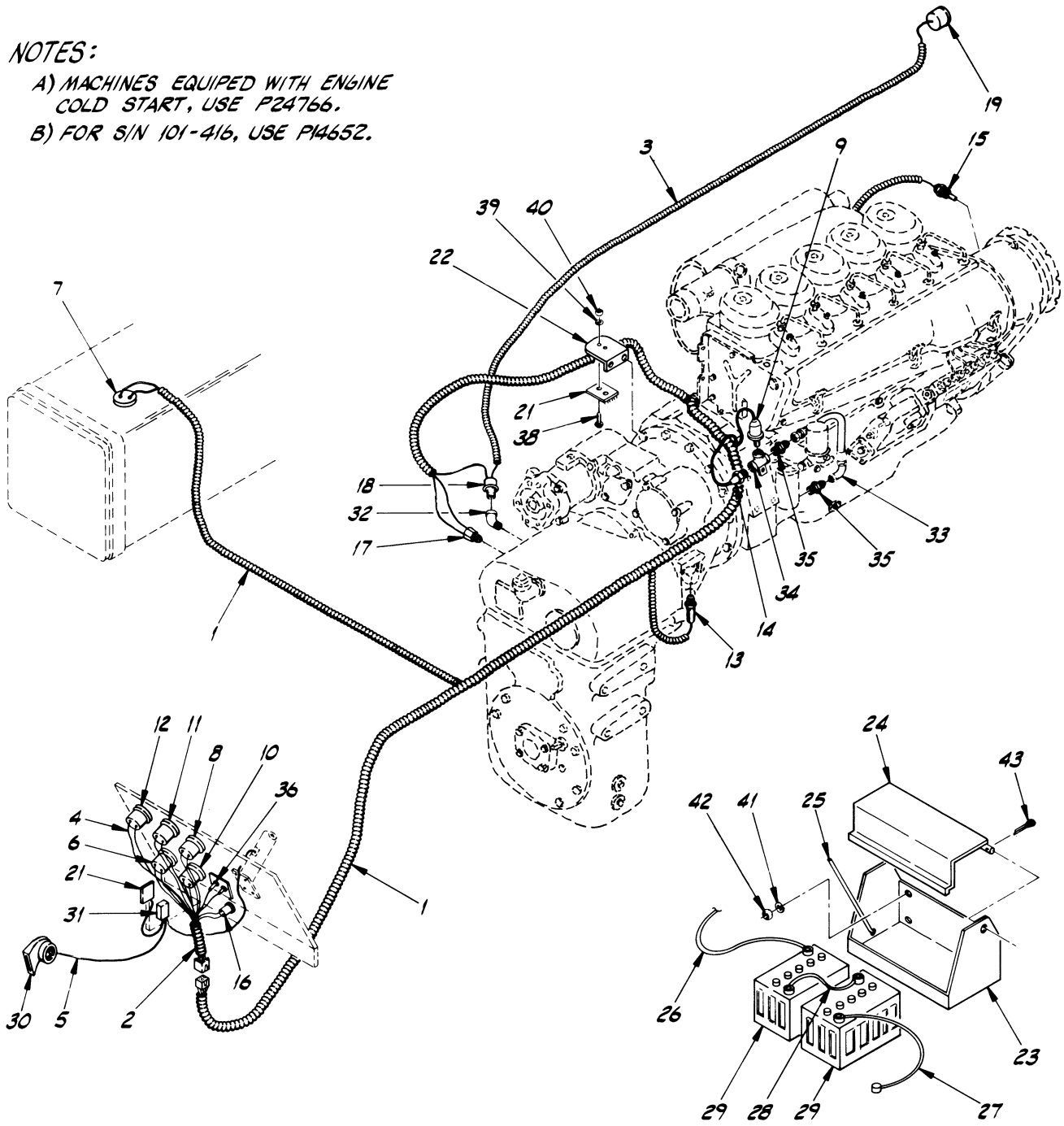

	ITEM	PART NO.	DESCRIPTION	REQ.
	43	COM'L	COTTER PIN, 3/32" x 3/4"	4
	42	COM'L	NUT, HX. 3/8-16	4
	41	COM'L	LOCKWASHER, 3/8"	4
	40	COM'L	NUT, HX. 10-24	4
	39	COM'L	LOCKWASHER, #10	4
	38	COM'L	CAPSCREW, R.H. 10-24 x 1/2	4
	37	P17553	CLAMP, HARNESS	3
	36	P20970	FAN BELT & OIL LIGHT	2
	35	P20866	CONNECTOR, MALE	2
	34	17914A	TEE	1
B)	33	P20408	OIL LINE	1
	32	P10215	45° ELBOW	1
	31	P13709	RELAY	2
	30	P13707	HORN	1
	29	P18121	BATTERY, 6 VOLT	2
	28	P18122	BATTERY CABLE, C.B.	1
	27	P19834	BATTERY CABLE, NEG.	1
	26	P19833	BATTERY CABLE, POS.	1
	25	17784A	HOLD DOWN ROD	2
	24	16355B	COVER, BATTERIES	1
	23	16344C	BATTERY BOX	1
	22	16273A	FUSE MOUNT BRKT.	1
	21	P19096	FUSE BLOCK	2
	20	P19103	FUSE, SFE 30 AMP	4
	19	P13774	BACK-UP ALARM	1
	18	P19105	SWITCH, BACK-UP	1
	17	P18673	SWITCH, NET. START	1
A)	16	P12634	SWITCH, IGNITION	1
	15	P20954	SWITCH, FAN BELT LIGHT	1
	14	P20953	SWITCH, OIL LIGHT	1
	13	P19472	SENDER, TRANS. OIL	1
	12	P18734	GAUGE, TRANS. OIL	1
	11	P18733	GAUGE, HOURMETER	1
	10	P18732	GAUGE, AMMETER	1
	9	P18731	SENDER, OIL PRESS.	1
	8	P18730	GAUGE, OIL PRESS.	1
	7	P18729	SENDER, FUEL	1
	6	P18728	GAUGE, FUEL	1
	5	P19101	HARNESS, HORN	1
	4	P19284	HARNESS, GAUGE-GND.	1
	3	P19102	HARNESS, BACK-UP	1
	2	P21559	HARNESS, UPPER	1
	1	P21405	HARNESS, LOWER	1

LULL Engineering Co., Inc. ST. PAUL, MINNESOTA 55121

DRAWN BY J DAUB

S/N 101-886

DRAWING TITLE

WIRING HARNESS ASSEMBLY MODEL 844

DEUTZ

SCALE C

DRAWING NO. 16813

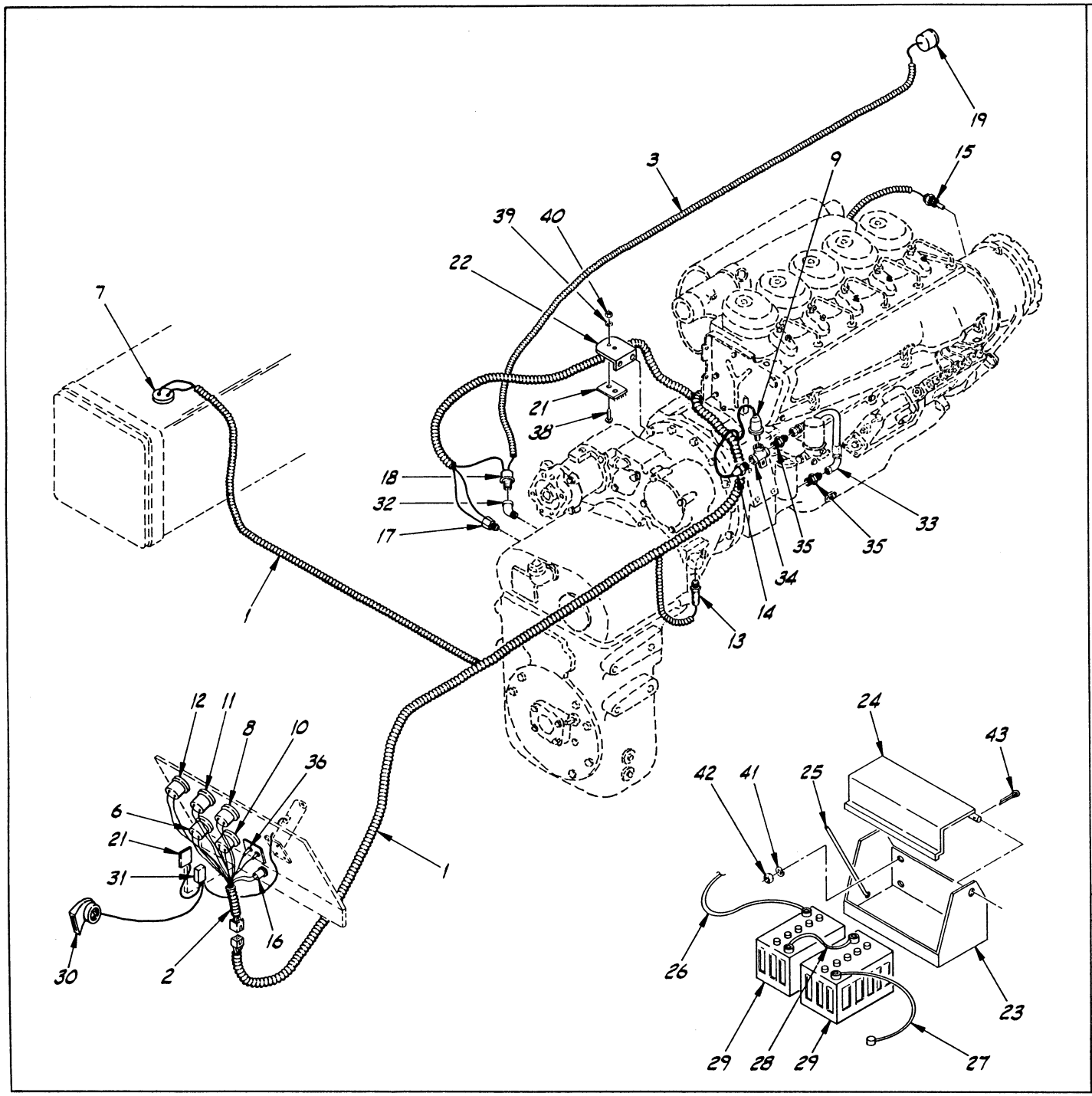

ITEM	PART NO.	DESCRIPTION	REQ.
43	COM'L	COTTER PIN, 3/32" x 3/4"	2
42	COM'L	NUT, HX. 3/8"-16 NC	4
41	COM'L	LOCKWASHER, 3/8"	4
40	COM'L	NUT, HX. 10-24 NC	4
39	COM'L	LOCKWASHER, #10	4
38	COM'L	CAPSCREW, R.H. 10-24 x 1/2"	4
37	P17553	CLAMP, HARNESS	3
36	P20970	FAN BELT & OIL LIGHT	2
35	P20866	CONNECTOR, MALE	2
34	17914A	TEE WELDMENT	1
33	P20408	OIL LINE	1
32	P10215	45° ELBOW	1
31	P13709	RELAY	2
30	P13707	HORN	1
29	P18121	BATTERY, 6 VOLT	2
28	P18122	BATTERY CABLE, C.B.	1
27	P19834	BATTERY CABLE, NEG.	1
26	P19833	BATTERY CABLE, POS.	1
25	17784A	HOLD DOWN ROD	2
24	16355B	COVER, BATTERIES	1
23	16344C	BATTERY BOX	1
22	16273A	FUSE MOUNT BRKT.	1
21	P19096	FUSE BLOCK	2
20	P19103	FUSE, SFE 30 AMP	4
19	P13774	BACK-UP ALARM	1
18	P19105	SWITCH, BACK-UP	1
17	P18673	SWITCH, NET. START	1
16	P24766	SWITCH, IGNITION	REF
15	P20954	SWITCH, FAN BELT LIGHT	1
14	P20953	SWITCH, OIL LIGHT	1
13	P19472	SENDER, TRANS. OIL	1
12	P23220	GAUGE, TRANS. OIL	1
11	P23219	GAUGE, HOURMETER	1
10	P23218	GAUGE, AMMETER	1
9	P23217	SENDER, OIL PRESS.	1
8	P23216	GAUGE, OIL PRESS.	1
7	P23215	SENDER, FUEL	1
6	P23214	GAUGE, FUEL	1
5			1
4			
3	P19102	HARNESS, BACK-UP	1
2	P21559	HARNESS, UPPER	1
1	P21405	HARNESS, LOWER	1

LULL Engineering Co., Inc. ST. PAUL, MINNESOTA 55121

DRAWN BY J DAUB

S/N 881, 887 THRU

DRAWING TITLE
WIRING HARNESS ASSEMBLY
MODEL 844

DEUTZ

SCALE C

DRAWING NO. 16813-1

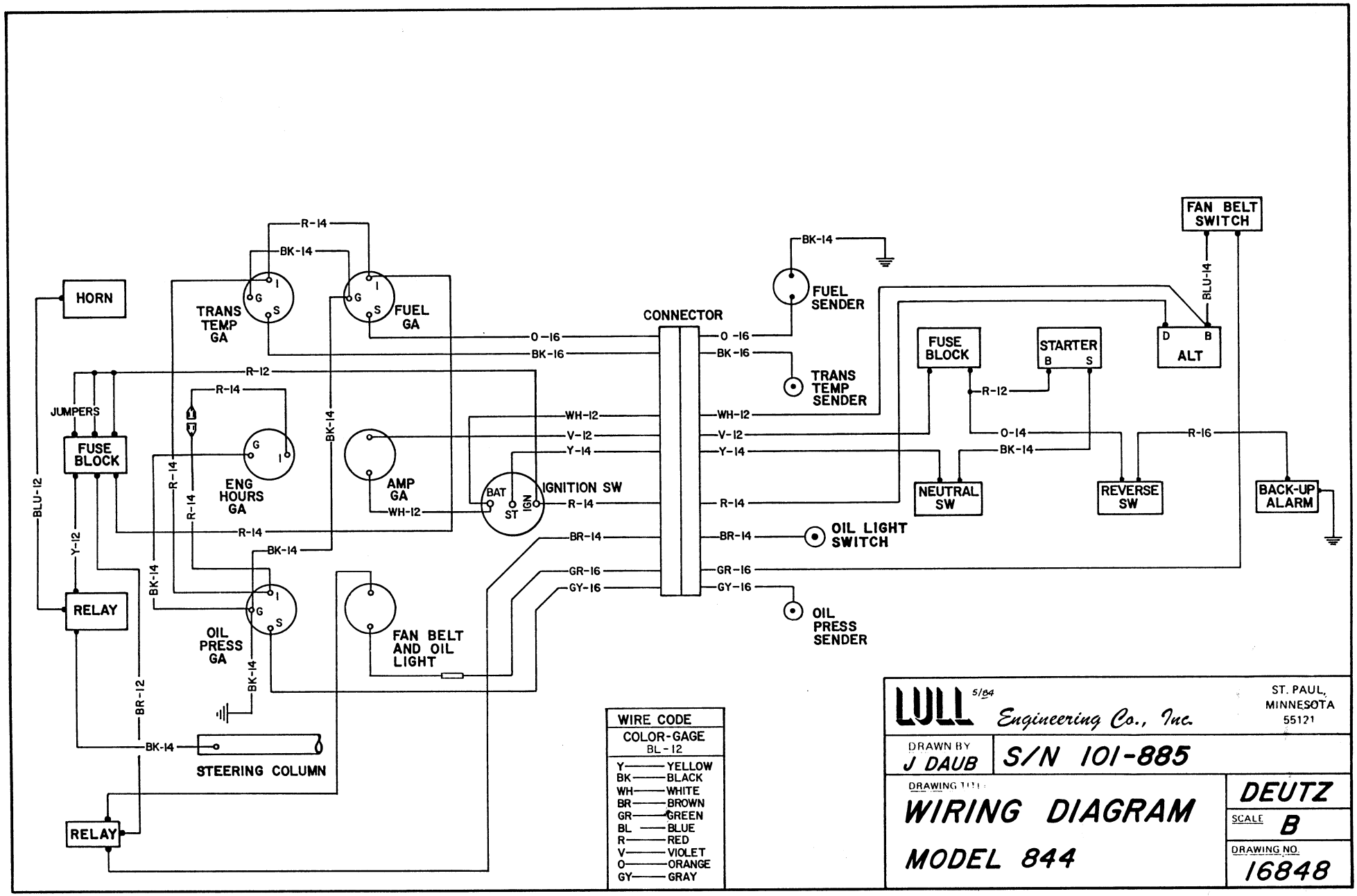

WIRE CODE	
COLOR-GAGE	BL-12
Y	YELLOW
BK	BLACK
WH	WHITE
BR	BROWN
GR	GREEN
BL	BLUE
R	RED
V	VIOLET
O	ORANGE
GY	GRAY

LULL Engineering Co., Inc. 5/84

ST. PAUL, MINNESOTA 55121

DRAWN BY J DAUB

S/N 101-885

DRAWING TITLE

WIRING DIAGRAM

MODEL 844

DEUTZ

SCALE B

DRAWING NO. 16848

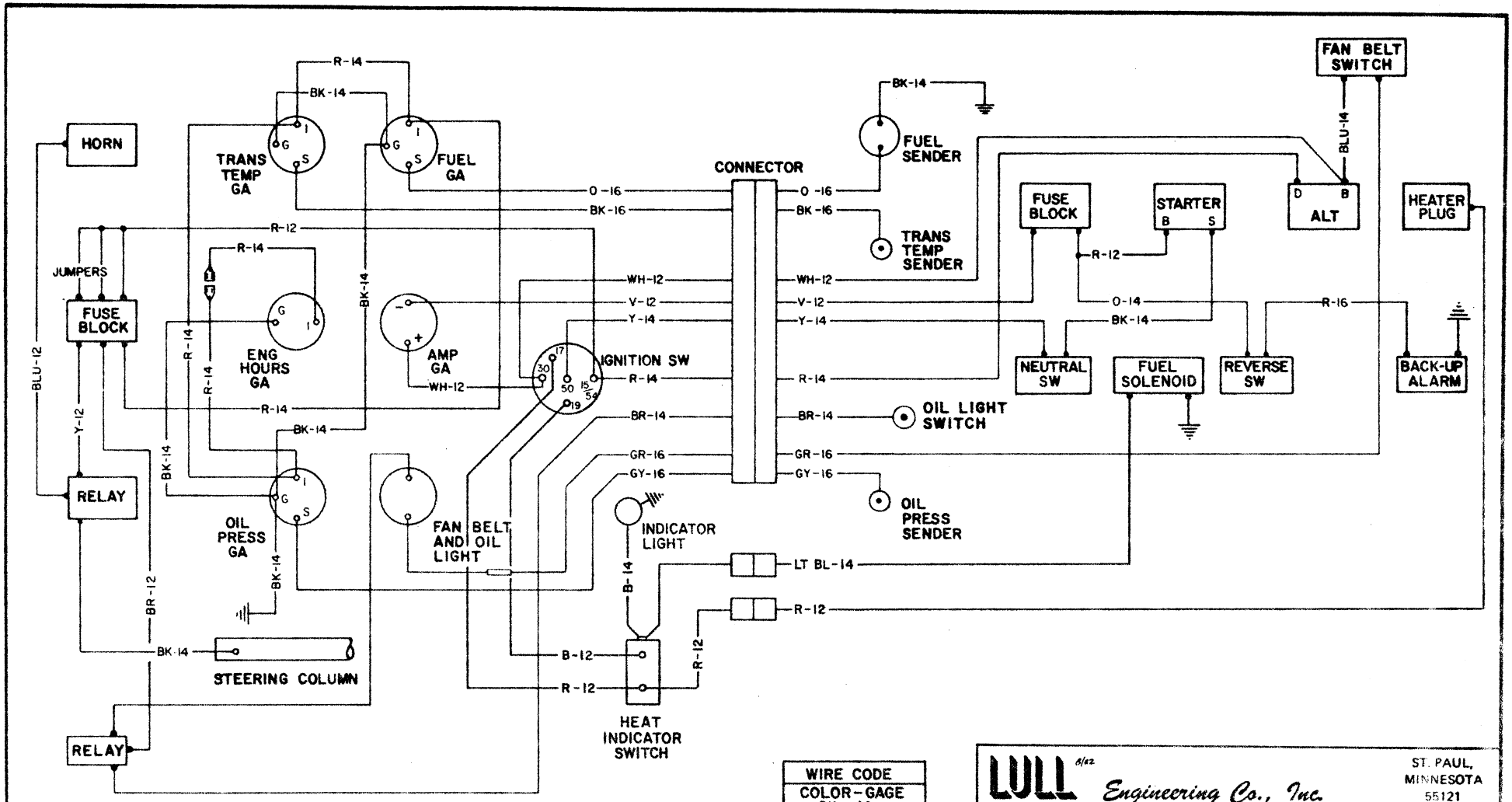

WIRE CODE	
COLOR-GAGE BK—14	
BK	BLACK
BR	BROWN
R	RED
O	ORANGE
Y	YELLOW
GR	GREEN
B	BLUE
V	VIOLET
GY	GRAY
WH	WHITE

LULL 6/82 Engineering Co., Inc.
ST. PAUL, MINNESOTA 55121

DRAWN BY Jeff Daub

S/N 886 THRU

DRAWING TITLE
WIRING DIAGRAM MODEL 844

DEUTZ

SCALE B

DRAWING NO. 16848-1

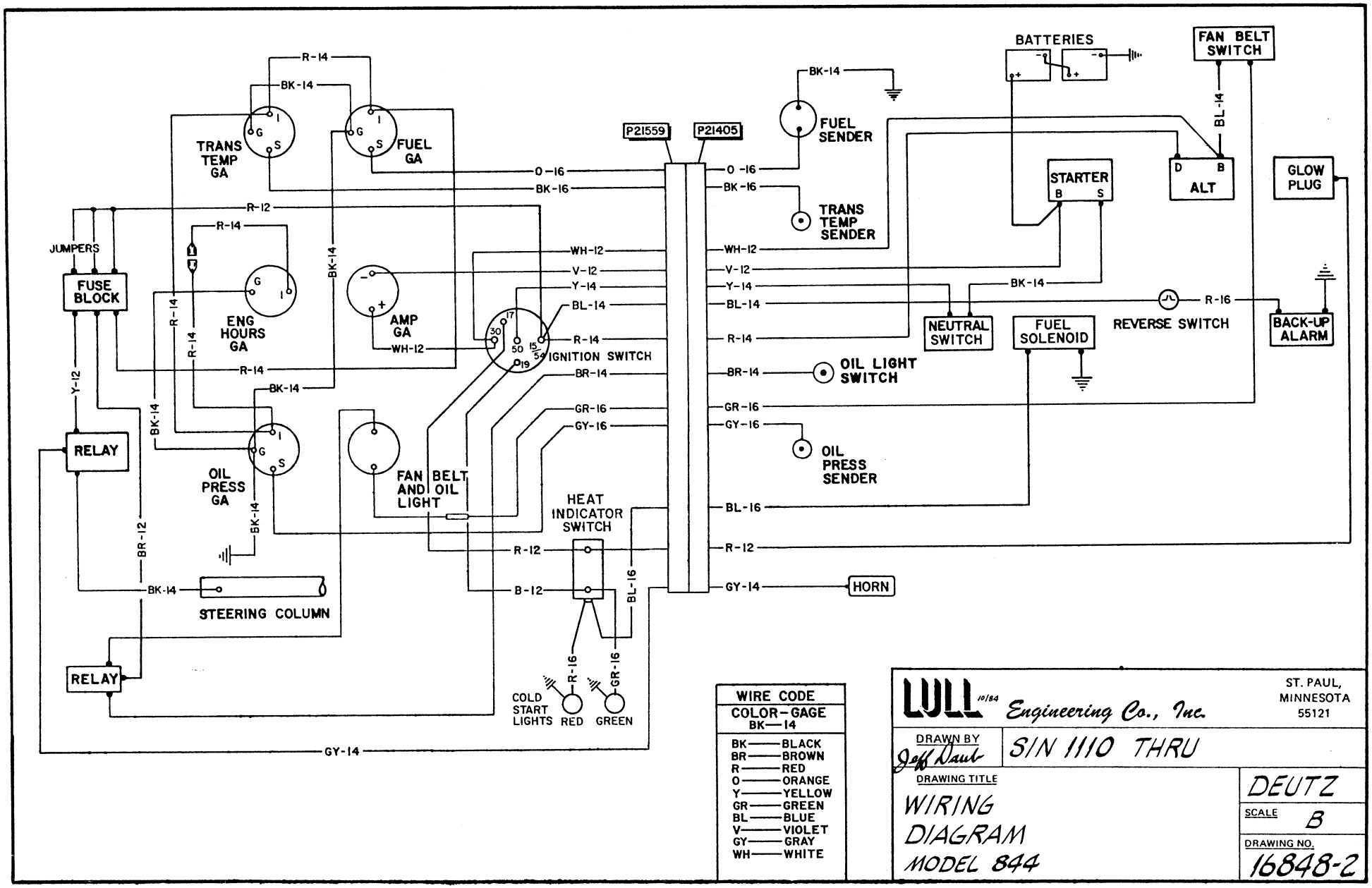

WIRE CODE	
COLOR-GAGE BK—14	
BK	BLACK
BR	BROWN
R	RED
O	ORANGE
Y	YELLOW
GR	GREEN
BL	BLUE
V	VIOLET
GY	GRAY
WH	WHITE

LULL 10/84 Engineering Co., Inc.
ST. PAUL, MINNESOTA 55121

DRAWN BY Jeff Daub

SIN 1110 THRU

DRAWING TITLE
WIRING DIAGRAM MODEL 844

DEUTZ

SCALE B

DRAWING NO. 16848-2

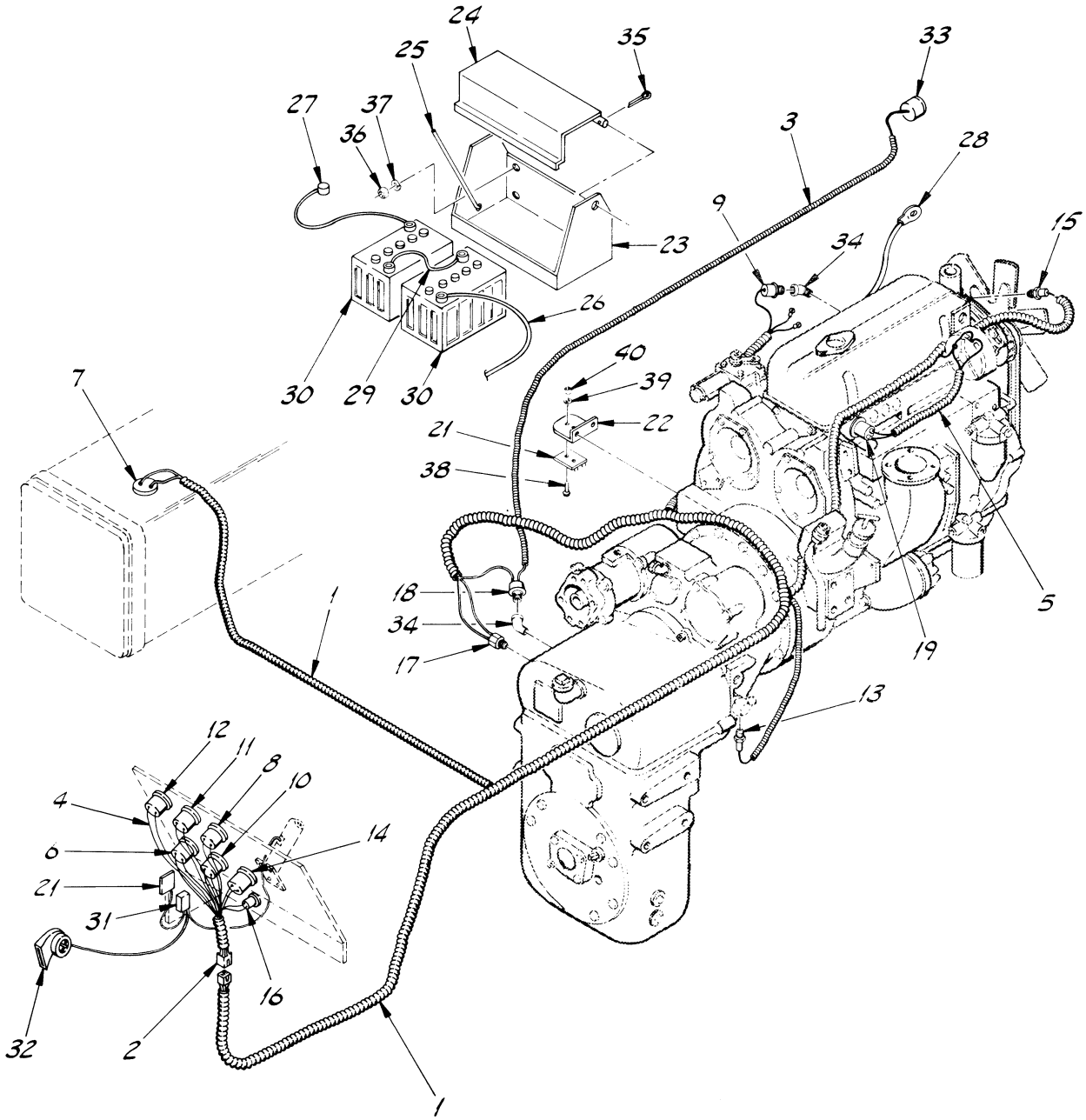

ITEM	PART NO.	DESCRIPTION	REQ.
40	COM'L	NUT, HX #10-24	2
39	COM'L	LOCKWASHER, #10	2
38	COM'L	CAPSCREW, R.H. 10-24×1/2"	2
37	COM'L	LOCKWASHER, 3/8"	4
36	COM'L	NUT, HX 3/8"-16	4
35	COM'L	COTTER PIN, 3/32"×5/8"	4
34	P10215	45° ELBOW, STREET	2
33	P13774	BACK-UP ALARM	1
32	P13707	HORN	1
31	P13709	HORN RELAY	1
30	P18121	BATTERY, 6 VOLT	2
29	P18122	BATTERY CABLE, C.B.	1
28	P19835	BATTERY CABLE, GND.	1
27	P19834	BATTERY CABLE, NEG.	1
26	P19833	BATTERY CABLE, POS.	1
25	16357A	HOLD DOWN ROD	2
24	16355B	COVER, BATTERIES	1
23	16344C	BATTERY BOX	1
22	16273A	FUSE MOUNT BRKT	1
21	P19096	FUSE BLOCK	2
20	P19103	FUSE, SFE 30 AMP	4
19	P20888	SWITCH, PRESSURE	1
18	P19105	SWITCH, BACK-UP	1
17	P18673	SWITCH, NEUTRAL	1
16	P11092	SWITCH, IGNITION	1
15	P23222	SENDER, WATER TEMP.	1
14	P23221	GAUGE, WATER TEMP.	1
13	P19472	SENDER, TRANS. OIL	1
12	P23220	GAUGE, TRANS. OIL	1
11	P23219	GAUGE, HOURMETER	1
10	P23218	GAUGE, AMMETER	1
9	P23217	SENDER, OIL PRESS.	1
8	P23216	GAUGE, OIL PRESS.	1
7	P23215	SENDER, FUEL	1
6	P23214	GAUGE, FUEL	1
5	P19529	HARNESS, SWITCH-ALT.	1
4	P19284	HARNESS, GND.-GAUGES	1
3	P19102	HARNESS, BACK-UP	1
2	P19099	HARNESS, UPPER	1
1	P20289	HARNESS, LOWER	1

LULL 6/85 Engineering Co., Inc.
ST. PAUL, MINNESOTA 55121

DRAWN BY: J DAUB
S/N 220-886

DRAWING TITLE: WIRING HARNESS ASSEMBLY MODEL 844

DETROIT

SCALE: C

DRAWING NO. 16814

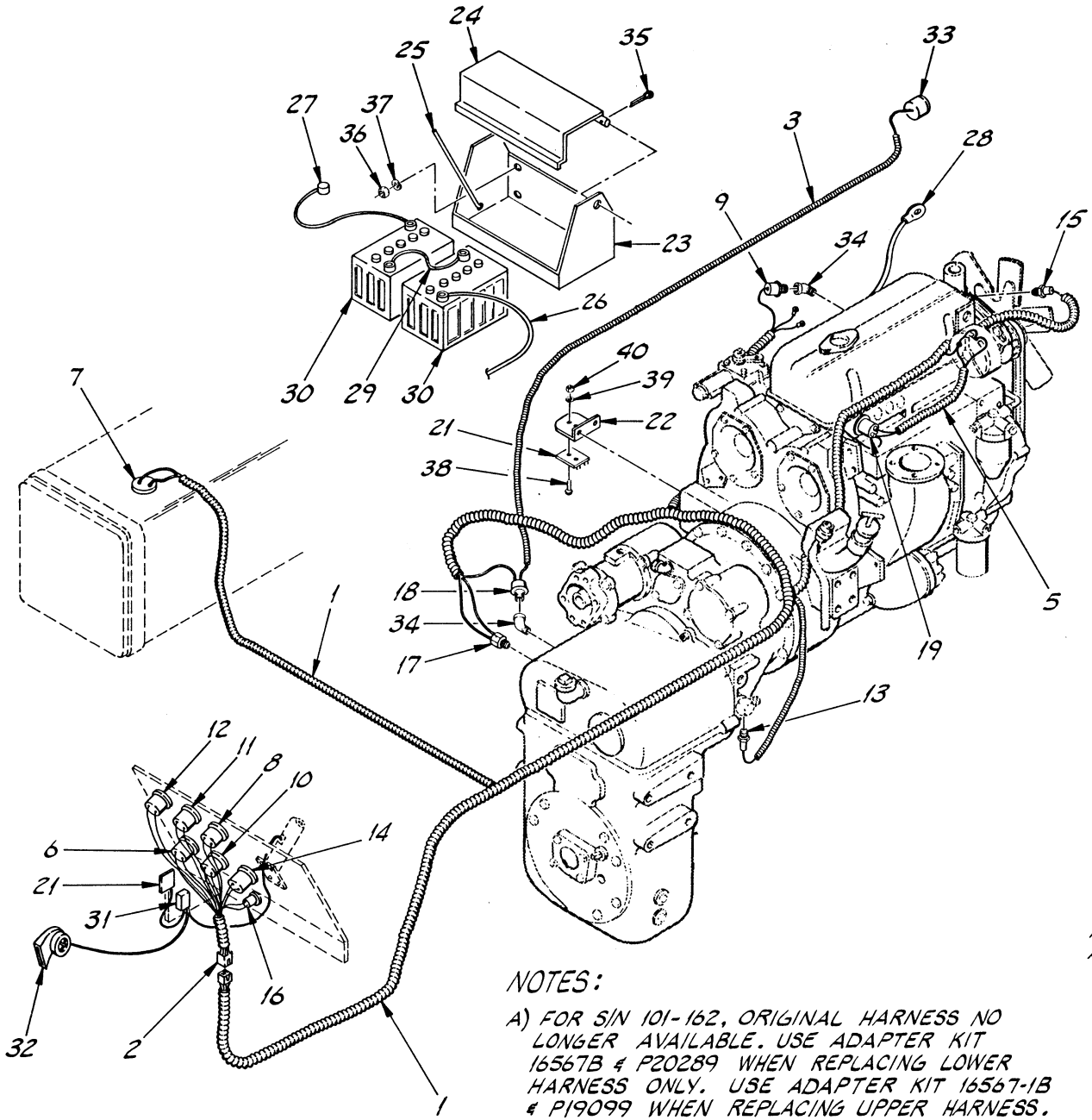

	ITEM	PART NO.	DESCRIPTION	REQ.
	40	COM'L	NUT, HX 10-24 NC	2
	39	COM'L	LOCKWASHER, #10	2
	38	COM'L	CAPSCREW, R.H. 10-24 × 1/2	2
	37	COM'L	LOCKWASHER, 3/8	4
	36	COM'L	NUT, HX 3/8-16 NC	4
	35	COM'L	COTTER PIN, 3/32 × 5/8	4
	34	P15093	45° ELBOW	2
	33	P13774	BACK-UP ALARM	1
	32	P13707	HORN	1
	31	P13709	HORN RELAY	1
	30	P19076	BATTERY, 6 VOLT	2
	29	P18122	BATTERY CABLE, C.B.	1
	28	P19835	BATTERY CABLE, GND.	1
	27	P19834	BATTERY CABLE, NEG.	1
	26	P19833	BATTERY CABLE, POS.	1
	25	16357A	HOLD DOWN ROD	2
	24	16355B	COVER, BATTERIES	1
	23	16344C	BATTERY BOX	1
	22	16273A	FUSE MOUNT BRKT	1
	21	P19096	FUSE BLOCK	2
	20	P19103	FUSE, SFE 30 AMP	4
	19	P20888	SWITCH, ALTERNATOR	1
	18	P19105	SWITCH, BACK-UP	1
	17	P18673	SWITCH, NEUTRAL	1
	16	P12634	SWITCH, IGNITION	1
	15	P23222	SENDER, WATER TEMP.	1
	14	P23221	GAUGE, WATER TEMP.	1
	13	P19472	SENDER, TRANS. OIL	1
	12	P23220	GAUGE, TRANS. OIL	1
	11	P23219	GAUGE, HOURMETER	1
	10	P23218	GAUGE, AMMETER	1
	9	P23217	SENDER, OIL PRESS.	1
	8	P23216	GAUGE, OIL PRESS.	1
	7	P23215	SENDER, FUEL	1
	6	P23214	GAUGE, FUEL	1
	5	P19529	HARNESS, SWITCH-ALT.	1
	4			
	3	P19102	HARNESS, BACK-UP	1
A)	2	P19099	HARNESS, UPPER	1
A)	1	P20289	HARNESS, LOWER	1

NOTES:

A) FOR S/N 101-162, ORIGINAL HARNESS NO LONGER AVAILABLE. USE ADAPTER KIT 16567B & P20289 WHEN REPLACING LOWER HARNESS ONLY. USE ADAPTER KIT 16567-1B & P19099 WHEN REPLACING UPPER HARNESS. ADAPTER KITS NOT NEEDED WHEN REPLACING BOTH HARNESSES.

LULL 5/82 Engineering Co., Inc. ST. PAUL, MINNESOTA 55121

DRAWN BY J DAUB

S/N 101-219, 887 THRU

DRAWING TITLE: WIRING HARNESS ASSEMBLY MODEL 844

DETROIT

SCALE C

DRAWING NO. 16814-1

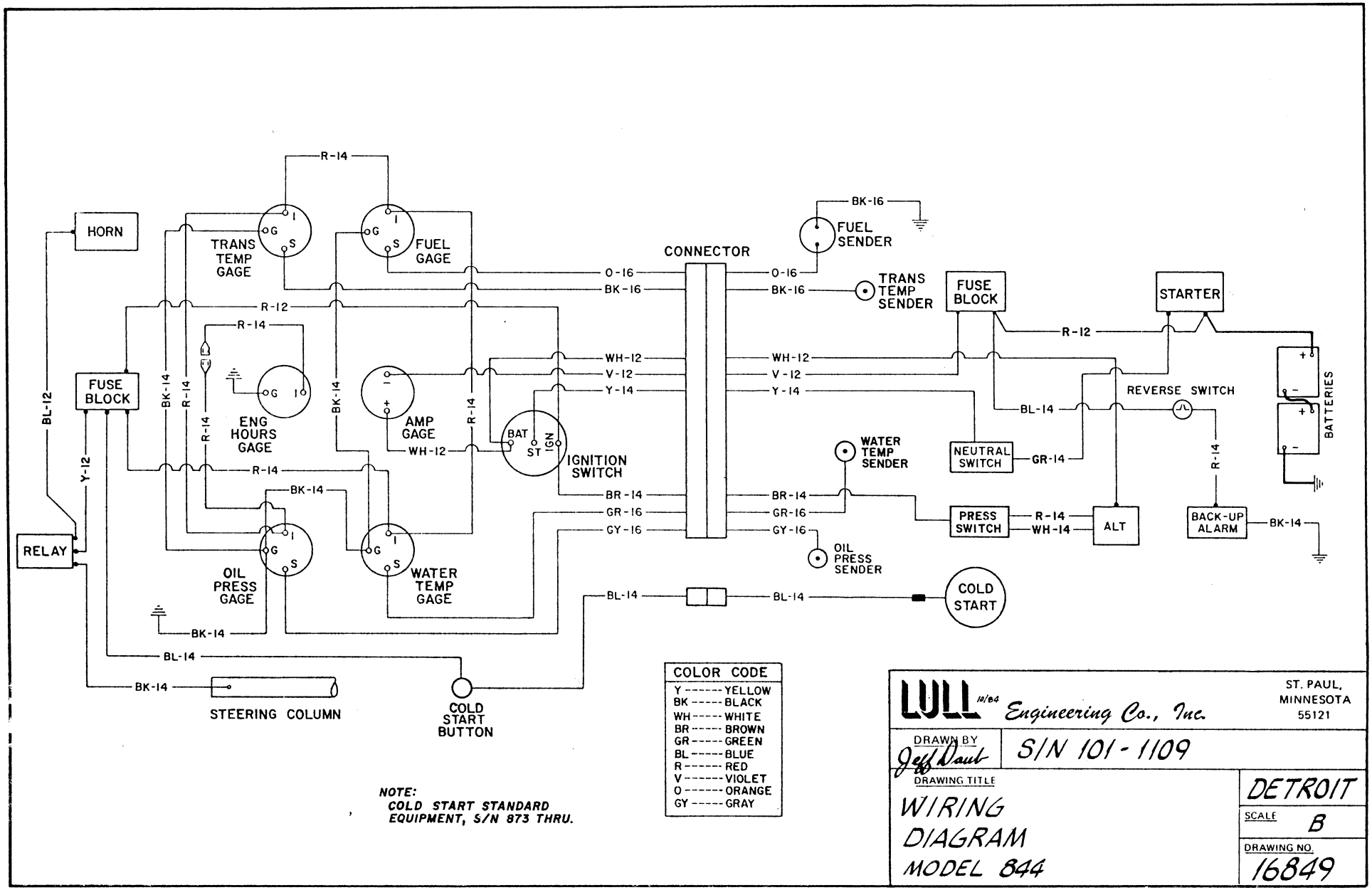

COLOR CODE	
Y	YELLOW
BK	BLACK
WH	WHITE
BR	BROWN
GR	GREEN
BL	BLUE
R	RED
V	VIOLET
O	ORANGE
GY	GRAY

NOTE:
COLD START STANDARD EQUIPMENT, S/N 873 THRU.

LULL 11/64 Engineering Co., Inc.
ST. PAUL, MINNESOTA 55121

DRAWN BY Jeff Daul

S/N 101 - 1109

DRAWING TITLE
WIRING DIAGRAM MODEL 844

DETROIT

SCALE B

DRAWING NO. 16849

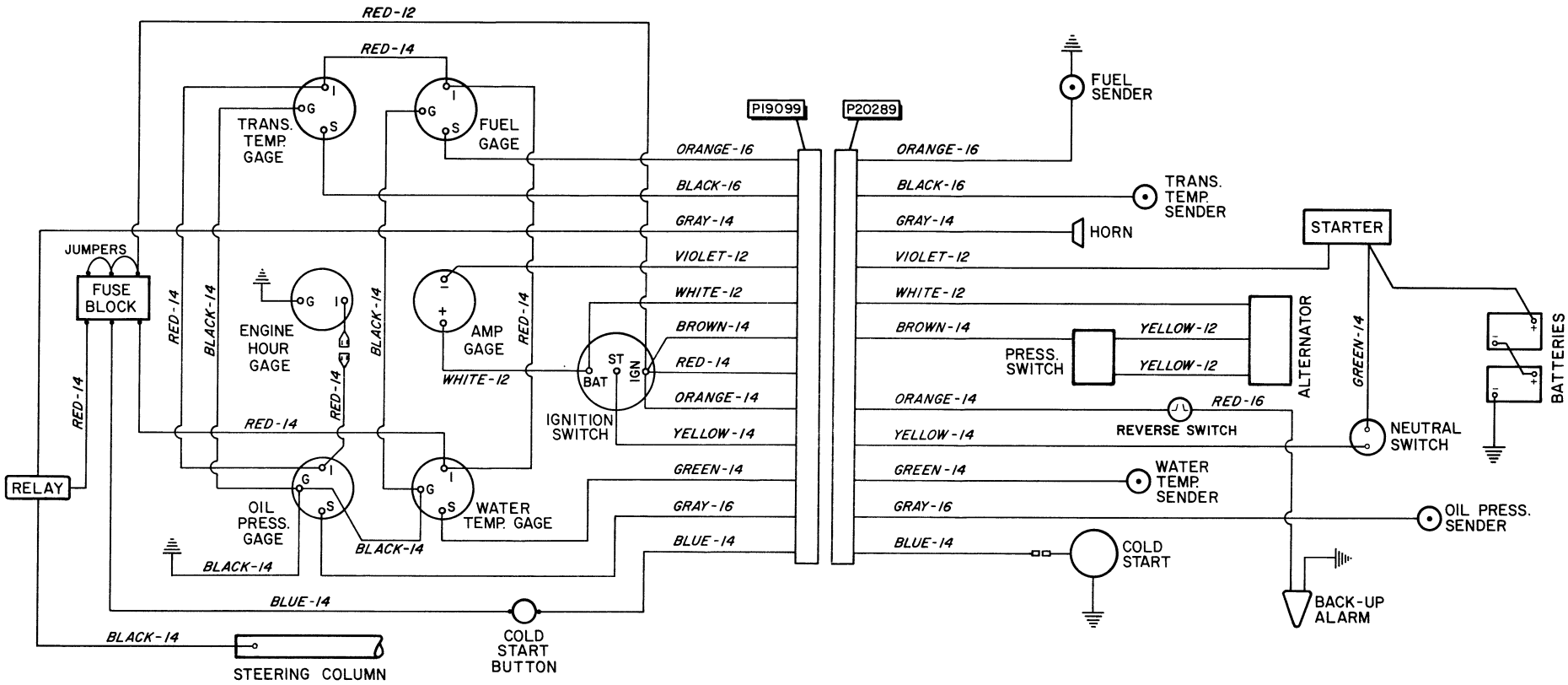

LULL 10/84 Engineering Co., Inc.
ST. PAUL, MINNESOTA 55121

DRAWN BY Jeff Daub

S/N 1110 THRU

DRAWING TITLE
WIRING DIAGRAM MODEL 844

DETROIT

SCALE B

DRAWING NO. 16849-1

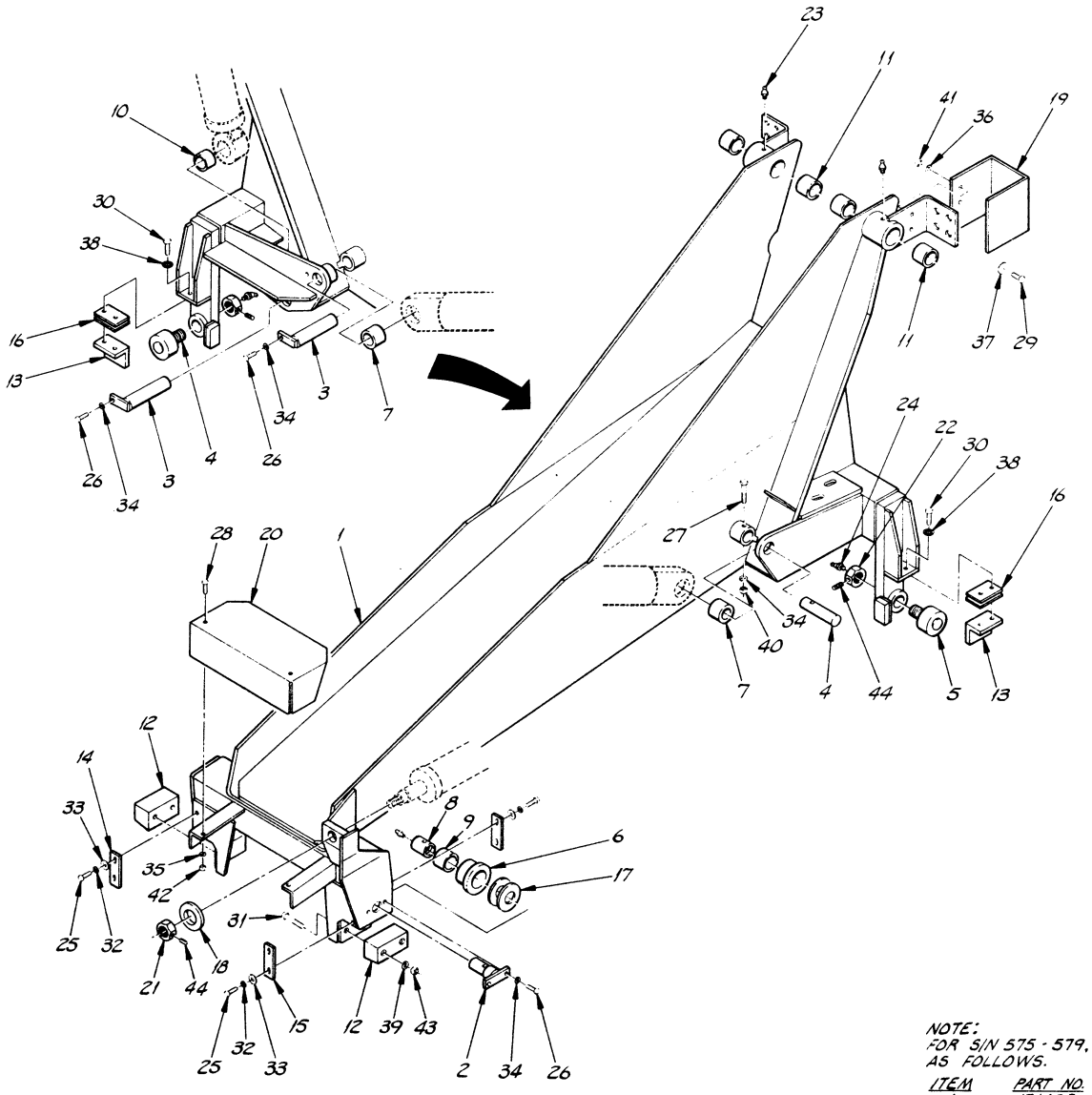

NOTE:
FOR S/N 575 - 579, USE AS FOLLOWS.

ITEM	PART NO.
1	17143R
2	17138A
17	P20341

ITEM	PART NO	DESCRIPTION	REQ.
44	COM'L	SET SCREW, 3/8"-16 NC	3
43	COM'L	NUT, HX. 3/4"-10 NC	4
42	COM'L	NUT, HX. 7/16"-14 NC	2
41	COM'L	NUT, HX. 1/2"-13 NC	2
40	COM'L	NUT, HX. 3/8"-16 NC	1
39	COM'L	LOCKWASHER, 3/4"	4
38	COM'L	STARWASHER, 5/8"	4
37	COM'L	FLATWASHER, 1/2"	4
36	COM'L	LOCKWASHER, 1/2"	2
35	COM'L	LOCKWASHER, 7/16"	2
34	COM'L	LOCKWASHER, 3/8"	7
33	COM'L	FLATWASHER, 5/16"	8
32	COM'L	LOCKWASHER, 5/16"	8
31	COM'L	BOLT, HX. 3/4"-10 NC x 3 1/2"	4
30	COM'L	BOLT, HX. 5/8"-11 NC x 1"	4
29	COM'L	BOLT, HX. 1/2"-13 NC x 1 1/2"	2
28	COM'L	BOLT, HX. 7/16"-14 NC x 1 1/4"	2
27	COM'L	BOLT, HX. 3/8"-16 NC x 3 3/4"	1
26	COM'L	BOLT, HX. 3/8"-16 NC x 3/4"	6
25	COM'L	BOLT, HX. 5/16"-18 NC x 3/4"	8
24	P15277	GREASE ZERK, 45°	2
23	P16611	GREASE ZERK	4
22	16310A	NUT, HEX SPECIAL	2
21	16369A	NUT, HEX SPECIAL	1
20	15875B	HOSE GUARD, FRONT	1
19	15878B	HOSE GUARD, REAR	1
18	15976A	SPACER, CYL. ROD END	1
17	P19125	SPACER WASHER	6
16	16342A	SHIM, REAR SLIDE SHOE	A/R
15	16146A	SCRAPER PLATE, L.H.	2
14	16309A	SCRAPER PLATE, R.H.	2
13	15953A	SLIDE SHOE, REAR	2
12	15972A	SLIDE SHOE, FRONT	2
11	P19111	BUSHING, PIVOT	4
10	P19106	BUSHING, TILT CYL.	1
9	P20393	BUSHING, ROLLER	2
8	16665-2	BUSHING, ADAPTOR	2
7	P18830	BUSHING, SELF-ALIGN	2
6	15969B	ROLLER	2
5	P18831	CAM ROLLER	2
4	15973A	PIN, HOIST CYL. BASE	1
3	15975A	PIN, HOIST & TILT CYL.	2
2	15968A	ROLLER SHAFT	2
1	16303R	TRANSFER CARRIAGE	1

LULL Engineering Co., Inc. 4/81
ST. PAUL, MINNESOTA 55121

DRAWN BY: Jeff Linck
S/N 101 - 579

DRAWING TITLE: TRANSFER CARRIAGE ASSEMBLY MODEL 844

REQD.
SCALE: D
DRAWING NO. 16807

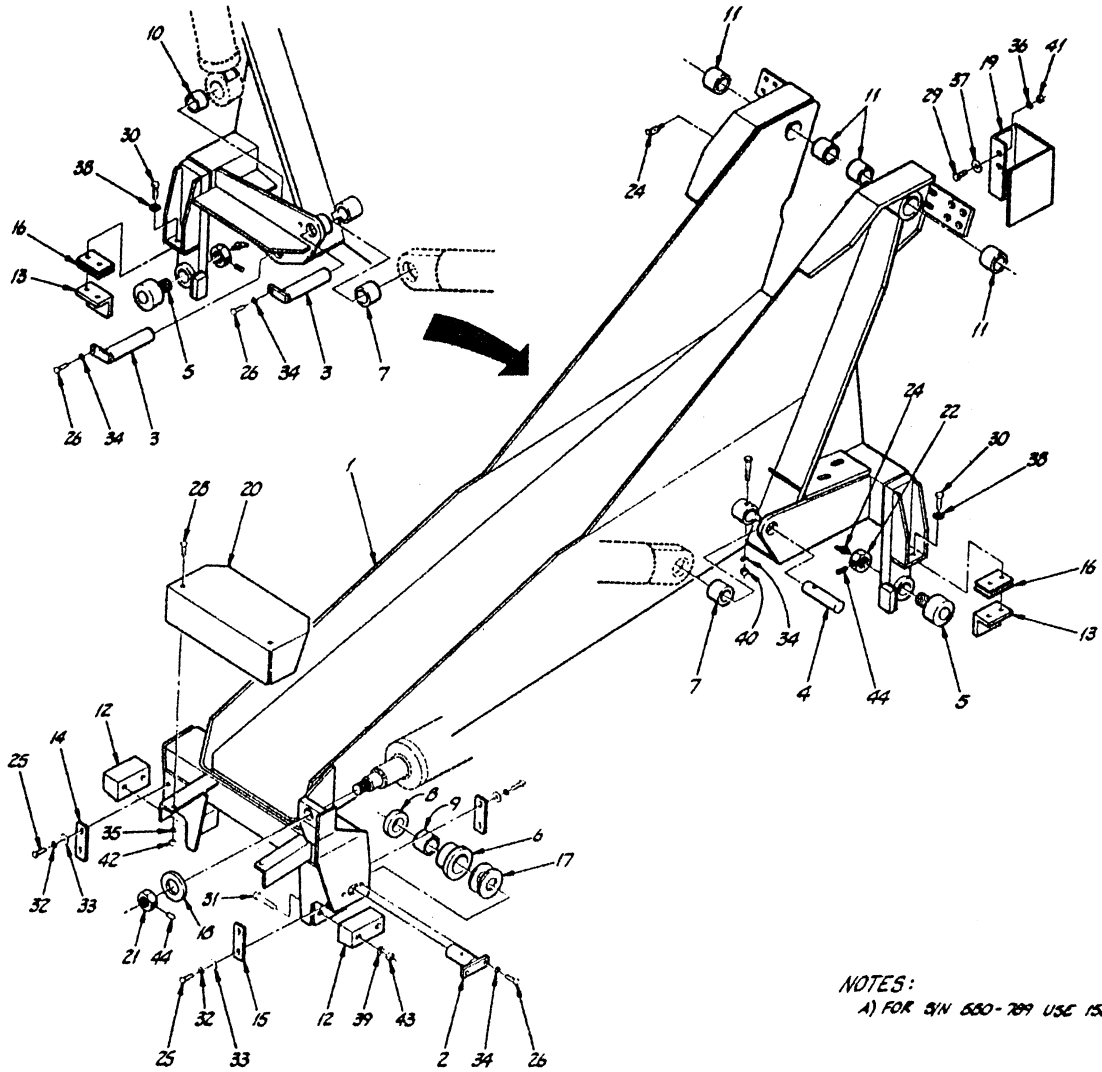

NOTES:

A) FOR S/N 580-789 USE 15578B

	ITEM	PART NO	DESCRIPTION	REQ.
	44	COM'L	SET SCREW, 3/8"-16 NC	3
	43	COM'L	NUT, HX. 3/4"-10 NC	4
	42	COM'L	NUT, HX. 7/16"-14 NC	2
	41	COM'L	NUT, HX. 1/2"-13 NC	2
	40	COM'L	NUT, HX. 3/8"-16 NC	1
	39	COM'L	LOCKWASHER, 3/4"	4
	38	COM'L	STARWASHER, 5/8"	4
	37	COM'L	FLATWASHER, 1/2"	4
	36	COM'L	LOCKWASHER, 1/2"	2
	35	COM'L	LOCKWASHER, 7/16"	2
	34	COM'L	LOCKWASHER, 3/8"	7
	33	COM'L	FLATWASHER, 3/16"	5
	32	COM'L	LOCKWASHER, 3/16"	8
	31	COM'L	BOLT, HX. 3/4"-10 NC × 3 1/2"	4
	30	COM'L	BOLT, HX. 5/8"-11 NC × 1"	4
	29	COM'L	BOLT, HX. 1/2"-13 NC × 1 1/2"	2
	28	COM'L	BOLT, HX. 7/16"-14 NC × 1 1/4"	2
	27	COM'L	BOLT, HX. 3/8"-16 NC × 3 3/4"	1
	26	COM'L	BOLT, HX. 3/8"-16 NC × 3/4"	6
	25	COM'L	BOLT, HX. 3/16"-18 NC × 3/4"	8
	24	P15275	GREASE ZERK, 45°	4
	23	P16611	GREASE ZERK	2
	22	19920A	NUT, HEX SPECIAL	2
	21	16369A	NUT, HEX SPECIAL	1
	20	15875B	HOSE GUARD, FRONT	1
A)	19	17095B	HOSE GUARD, REAR	1
	18	15976A	SPACER, CYL. ROD END	1
	17	P20431	SPACER WASHER	6
	16	16342A	SHIM, REAR SLIDE SHOE	8/16
	15	16146A	SCRAPER PLATE, L.H.	2
	14	16309A	SCRAPER PLATE, R.H.	2
	13	15953A	SLIDE SHOE, REAR	2
	12	15972A	SLIDE SHOE, FRONT	2
	11	P19111	BUSHING, PIVOT	4
	10	P19106	BUSHING, TILT CYL.	1
	9	P20393	BUSHING, ROLLER	2
	8	17180A	SPACER, ROLLER	2
	7	P18830	BUSHING, SELF-ALIGN	2
	6	P24735	ROLLER	2
	5	P18831	CAM ROLLER	2
	4	15973A	PIN, HOIST CYL. BASE	1
	3	15975A	PIN, HOIST & TILT CYL	2
	2	17183A	ROLLER SHAFT	2
	1	17185R	TRANSFER CARRIAGE	1

WILL Engineering Co., Inc. — ST. PAUL, MINNESOTA 55127

S/N 580 THRU

TRANSFER CARRIAGE ASSEMBLY
MODEL 844

SCALE D

16807-1

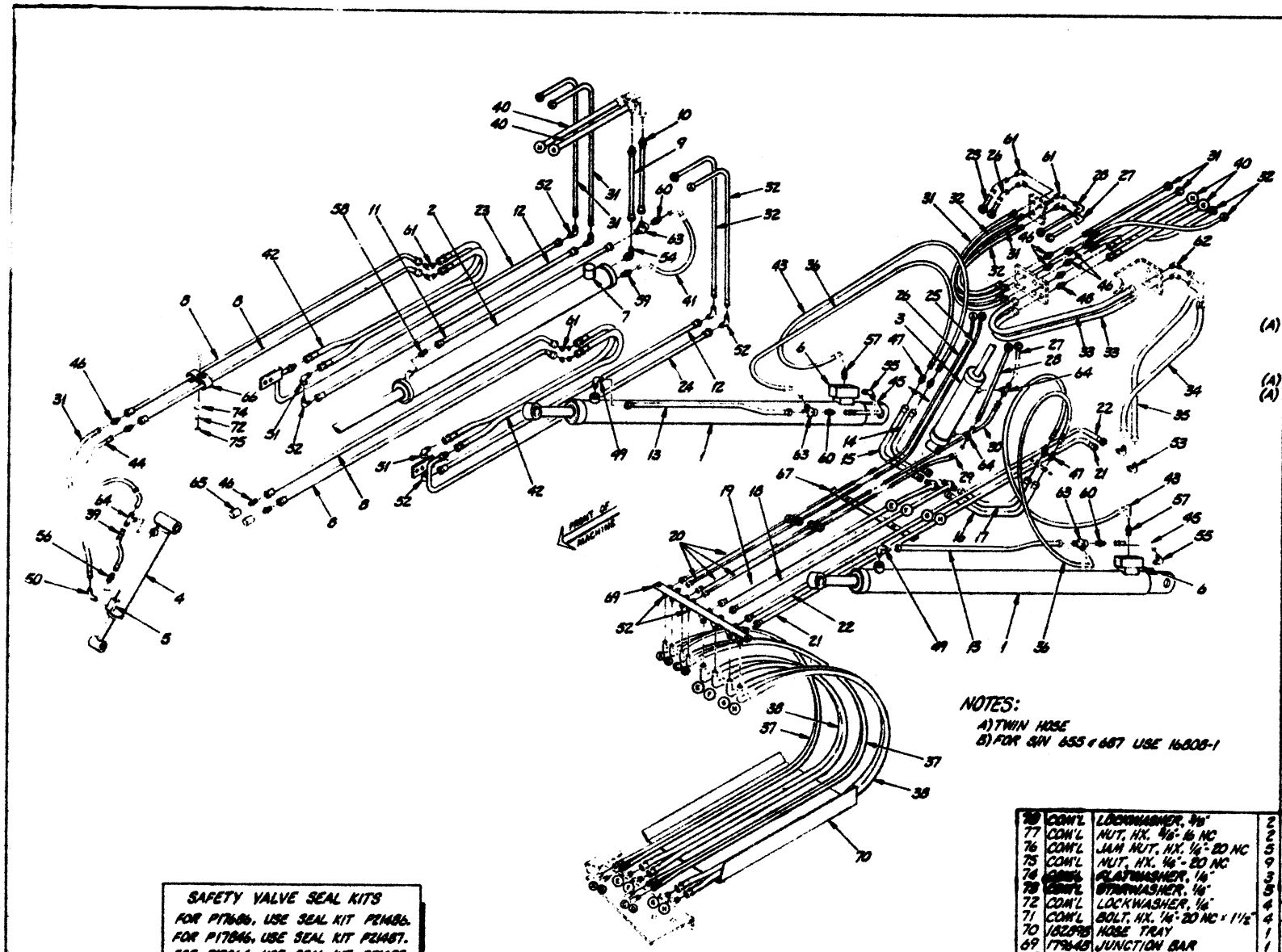

NOTES:

A) TWIN HOSE

B) FOR S/N 655 & 667 USE 16808-1

SAFETY VALVE SEAL KITS

FOR P17846, USE SEAL KIT P21487.

FOR P19064, USE SEAL KIT P21488.

ITEM	PART NO.	DESCRIPTION	REQ.
78	COM'L	LOCKWASHER, 3/8"	2
77	COM'L	NUT, HX. 3/8"-16 NC	2
76	COM'L	JAM NUT, HX. 1/4"-20 NC	5
75	COM'L	NUT, HX. 1/4"-20 NC	9
74	COM'L	FLATWASHER, 1/4"	3
73	COM'L	FLATWASHER, 1/4"	5
72	COM'L	LOCKWASHER, 1/4"	4
71	COM'L	BOLT, HX. 1/4"-20 NC x 1 1/2"	4
70	182598	HOSE TRAY	1
69	179648	JUNCTION BAR	1
68	16122A	WEDGE BLOCK	1
67	157806	TUBE SUPPORT	1
66	P17834	TUBE CLAMP	8
65	P18929	HEX CAP	2
64	P18936	TEE, O-RING	3

ITEM	PART NO.	DESCRIPTION	REQ.
63	P18935	TEE, FEMALE RUN	2
62	P18930	45° ELBOW, BULKHEAD	2
61	P18947	45° ELBOW, BULKHEAD	8
60	P17046	CONNECTOR, MALE	1
59	P19062	CONNECTOR, MALE	1
58	P18964	CONNECTOR, O-RING	1
57	P18944	CONNECTOR, O-RING	2
56	P18959	CONNECTOR, MALE	1
55	P19068	90° ELBOW, O-RING	2
54	P19055	90° ELBOW, O-RING	1
53	P19031	90° ELBOW	2
52	P18959	90° ELBOW	8
51	P18957	90° ELBOW, SWIVEL	1
50	P18935	90° ELBOW, O-RING	1
49	P18924	90° ELBOW, O-RING	2
48	P18951	UNION, BULKHEAD	2
47	P18949	UNION, BULKHEAD	4
46	P18948	UNION, BULKHEAD	8
45	P19269	HYD. HOSE .25 x 7	2
44	P19078	HYD. HOSE .38 x 2	1
43	P18927	HYD. HOSE .50 x 65	2
(A) 42	P18920	HYD. HOSE .38 x 1	2
41	P18919	HYD. HOSE .25 x 17	1
40	P18916	HYD. HOSE .75 x 65	2
39	P18893	HYD. HOSE .25 x 22	1
(A) 38	P18891	HYD. HOSE .75 x 7	2
(A) 37	P18890	HYD. HOSE .38 x 7	2
36	P18865	HYD. HOSE .50 x 6	2
35	P18863	HYD. HOSE .75 x 4	1
34	P18862	HYD. HOSE .75 x 46	1
33	P18850	HYD. HOSE .75 x 58	2
32	P18857	HYD. HOSE .38 x 4	4
31	P18856	HYD. HOSE .38 x	5
30	P18854	HYD. HOSE .38 x	1
29	P18853	HYD. HOSE .38 x 2	1
28	P18852	HYD. HOSE .38 x 4	1
27	P18850	HYD. HOSE .38 x 2	1
26	P19131	HYD. HOSE .38 x 70	1
25	P19068	HYD. HOSE .38 x 79	1
24	P18975	HYD. TUBING .38 O.D.	1
23	P18857	HYD. TUBING .38 O.D.	1
22	P18985	HYD. TUBING .75 O.D.	1
21	P18984	HYD. TUBING .75 O.D.	1
20	P18983	HYD. TUBING .38 O.D.	4
19	P18982	HYD. TUBING .75 O.D.	1
18	P18981	HYD. TUBING .75 O.D.	1
17	P18980	HYD. TUBING .62 O.D.	1
16	P18979	HYD. TUBING .62 O.D.	1
15	P18978	HYD. TUBING .62 O.D.	1
14	P18977	HYD. TUBING .62 O.D.	1
13	P18976	HYD. TUBING .62	2
12	P18974	HYD. TUBING .38	2
11	P18973	HYD. TUBING .62 O.D.	1
10	P18972	HYD. TUBING .75	1
9	P18971	HYD. TUBING .62	1
8	P18970	HYD. TUBING .38	4
7	P19064	SAFETY VALVE, BOOM	1
6	P17846	SAFETY VALVE, HOIST	2
5	P17686	SAFETY VALVE, TILT	1
4	P19174	MASTER CARR. TILT CYL.	1
3	P19173	CARRIAGE TILT CYL.	1
2	P19172	BOOM EXTENSION CYL.	1
1	P19169	HOIST CYLINDER	2

WILL Engineering Co., Inc.

ST. PAUL, MINNESOTA 55121

S/N 101 - 705 (B)

UPPER HYDRAULIC ASSEMBLY

MODEL 844

SIZE D

DRAWING NO. 16808

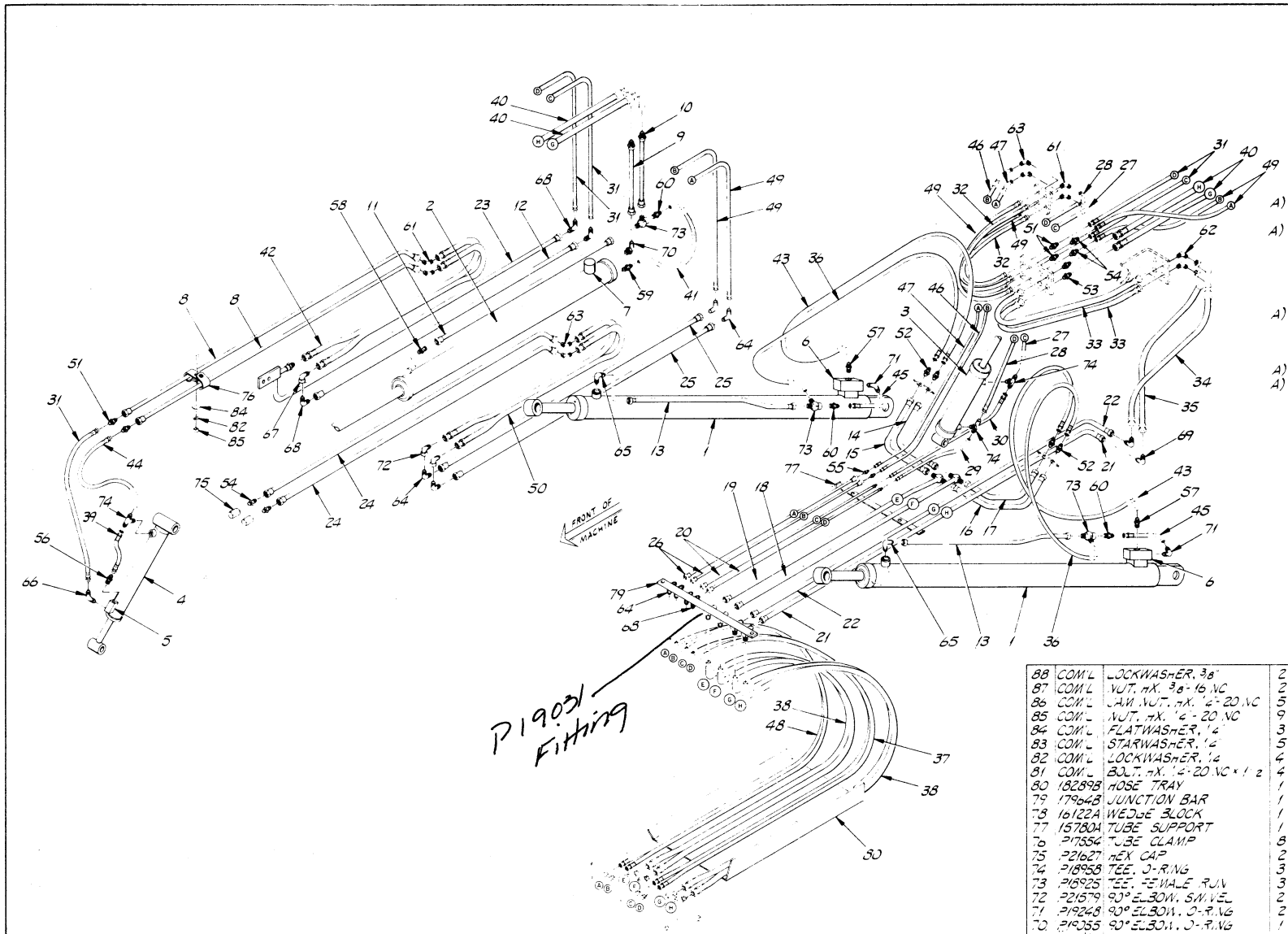

ITEM	PART NO.	DESCRIPTION	REQ.
88	COMM'L	LOCKWASHER, 3/8"	2
87	COMM'L	NUT, HX. 3/8-16 NC	2
86	COMM'L	JAM NUT, HX. 1/2-20 NC	5
85	COMM'L	NUT, HX. 1/2-20 NC	9
84	COMM'L	FLATWASHER, 1/2"	3
83	COMM'L	STARWASHER, 1/2"	5
82	COMM'L	LOCKWASHER, 1/2"	4
81	COMM'L	BOLT, HX. 1/2-20 NC × 1 1/2	4
80	182898	HOSE TRAY	1
79	179648	JUNCTION BAR	1
78	16122A	WEDGE BLOCK	1
77	16780A	TUBE SUPPORT	1
76	P17554	TUBE CLAMP	8
75	P21627	HEX CAP	2
74	P18958	TEE, O-RING	3
73	P18925	TEE, FEMALE RUN	3
72	P21579	90° ELBOW, SWIVEL	2
71	P19248	90° ELBOW, O-RING	2
70	P19055	90° ELBOW, O-RING	1
69	P19031	90° ELBOW	2
68	P18959	90° ELBOW	4
67	P18957	90° ELBOW, SWIVEL	1
66	P18935	90° ELBOW, O-RING	1
65	P18924	90° ELBOW, O-RING	2
64	P17507	90° ELBOW	5

ITEM	PART NO.	DESCRIPTION	REQ.
63	P21580	45° ELBOW, BULKHEAD	4
62	P18950	45° ELBOW, BULKHEAD	2
61	P18947	45° ELBOW, BULKHEAD	4
60	P19246	CONNECTOR, MALE	3
59	P19062	CONNECTOR, MALE	1
58	P18964	CONNECTOR, O-RING	1
57	P18944	CONNECTOR, O-RING	2
56	P18939	CONNECTOR, MALE	1
55	P21586	UNION, MALE	2
54	P21578	UNION, BULKHEAD	4
53	P18951	UNION, BULKHEAD	2
52	P18949	UNION, BULKHEAD	4
51	P18948	UNION, BULKHEAD	4
A) 50	P21583	HYD. HOSE .50 × 109	(2) p25316
49	P21575	HYD. HOSE .50 × 46	4
A) 48	P21574	HYD. HOSE .50 × 77	1
47	P21573	HYD. HOSE .50 × 70	1
46	P21572	HYD. HOSE .50 × 73	1
45	P19249	HYD. HOSE .25 × 7	2
44	P19078	HYD. HOSE .38 × 21	1
43	P18927	HYD. HOSE .50 × 66	2
A) 42	P18920	HYD. HOSE .38 × 109	(2) p25317
41	P18919	HYD. HOSE .25 × 17	1
40	P18916	HYD. HOSE .75 × 26	2
39	P18893	HYD. HOSE .25 × 22	1
A) 38	P18891	HYD. HOSE .75 × 73	2
A) 37	P18890	HYD. HOSE .38 × 77	1
36	P18865	HYD. HOSE .50 × 62	2
35	P18863	HYD. HOSE .75 × 48	1
34	P18862	HYD. HOSE .75 × 46	1
33	P18858	HYD. HOSE .75 × 58	2
32	P18857	HYD. HOSE .38 × 43	2
31	P18856	HYD. HOSE .38 × 47	3
30	P18854	HYD. HOSE .38 × 49	1
29	P18853	HYD. HOSE .38 × 28	1
28	P18852	HYD. HOSE .38 × 46	1
27	P18850	HYD. HOSE .38 × 23	1
26	P21601	HYD. TUBING .50 O.D.	2
25	P21600	HYD. TUBING .50 O.D.	2
24	P21599	HYD. TUBING .50 O.D.	2
23	P18837	HYD. TUBING .38 O.D.	1
22	P18985	HYD. TUBING .75 O.D.	1
21	P18984	HYD. TUBING .75 O.D.	1
20	P18983	HYD. TUBING .38 O.D.	2
19	P18982	HYD. TUBING .75 O.D.	1
18	P18981	HYD. TUBING .75 O.D.	1
17	P18980	HYD. TUBING .62 O.D.	1
16	P18979	HYD. TUBING .62 O.D.	1
15	P18978	HYD. TUBING .62 O.D.	1
14	P18977	HYD. TUBING .62 O.D.	1
13	P18976	HYD. TUBING .62 O.D.	2
12	P18974	HYD. TUBING .38 O.D.	1
11	P18973	HYD. TUBING .62 O.D.	1
10	P18972	HYD. TUBING .75 O.D.	1
9	P18971	HYD. TUBING .62 O.D.	1
8	P18970	HYD. TUBING .38 O.D.	2
7	P19064	SAFETY VALVE, BOOM	1
6	P17846	SAFETY VALVE, HOIST	2
5	P17686	SAFETY VALVE, TILT	1
4	P19174	MASTER CARR. TILT CYL.	1
3	P19173	CARRIAGE TILT CYL.	1
2	P19172	BOOM EXTENSION CYL.	1
1	P19169	HOIST CYLINDER	2

ITEM	PART NO.	DESCRIPTION	REQ.

LUCAS

ST. PAUL, MINNESOTA 55121

DRAWN: Jeff Dau

DRAWING TITLE: UPPER HYDRAULIC ASSEMBLY MODEL 844

665,687-0-1040 706

SCALE: D

DRAWING NO. 16808-1

NOTES:
AS TAN -OSE

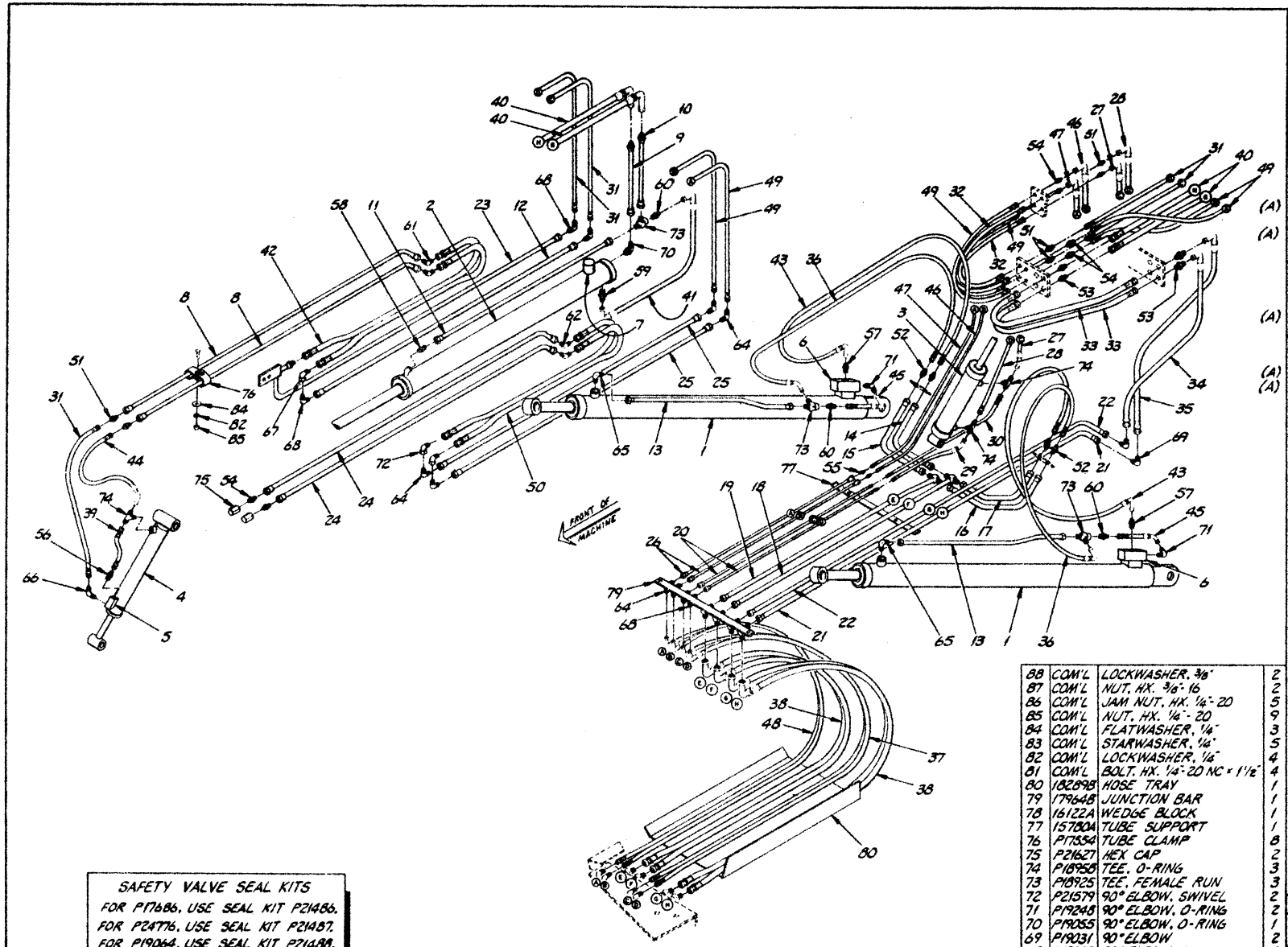

ITEM	PART NO.	DESCRIPTION	REQ.
63			
62	P21580	45° ELBOW, BULKHEAD	2
61	P18947	45° ELBOW, BULKHEAD	2
60	P19246	CONNECTOR, MALE	3
59	P19062	CONNECTOR, MALE	1
58	P18964	CONNECTOR, O-RING	1
57	P18944	CONNECTOR, O-RING	2
56	P18939	CONNECTOR, MALE	1
55	P21585	UNION, MALE	2
54	P21578	UNION, BULKHEAD	6
53	P18951	UNION, BULKHEAD	4
52	P18949	UNION, BULKHEAD	4
51	P18948	UNION, BULKHEAD	6
(A) 50	P21583	HYD. HOSE .50 × 109	1
49	P21575	HYD. HOSE .50 × 46	4
(A) 48	P21574	HYD. HOSE .50 × 77	1
47	P21573	HYD. HOSE .50 × 70	1
46	P21572	HYD. HOSE .50 × 73	1
45	P19249	HYD. HOSE .25 × 7	2
44	P19078	HYD. HOSE .38 × 21	1
43	P18927	HYD. HOSE .50 × 66	2
(A) 42	P18920	HYD. HOSE .38 × 109	1
41	P21361	HYD. HOSE .25 × 19	1
40	P18916	HYD. HOSE .75 × 26	2
39	P18893	HYD. HOSE .25 × 22	1
(A) 38	P18891	HYD. HOSE .75 × 73	2
(A) 37	P18890	HYD. HOSE .38 × 77	1
36	P18865	HYD. HOSE .50 × 62	2
35	P18863	HYD. HOSE .75 × 48	1
34	P18862	HYD. HOSE .75 × 46	1
33	P18858	HYD. HOSE .75 × 58	2
32	P18857	HYD. HOSE .38 × 43	2
31	P18856	HYD. HOSE .38 × 47	3
30	P18854	HYD. HOSE .38 × 49	1
29	P18853	HYD. HOSE .38 × 28	1
28	P18852	HYD. HOSE .38 × 46	1
27	P18850	HYD. HOSE .38 × 23	1
26	P21601	HYD. TUBING .50 O.D.	2
25	P24934	HYD. TUBING .50 O.D.	2
24	P21599	HYD. TUBING .50 O.D.	2
23	P24936	HYD. TUBING .38 O.D.	1
22	P18985	HYD. TUBING .75 O.D.	1
21	P18984	HYD. TUBING .75 O.D.	1
20	P18983	HYD. TUBING .38 O.D.	2
19	P18982	HYD. TUBING .75 O.D.	1
18	P18981	HYD. TUBING .75 O.D.	1
17	P18980	HYD. TUBING .62 O.D.	1
16	P18979	HYD. TUBING .62 O.D.	1
15	P18978	HYD. TUBING .62 O.D.	1
14	P18977	HYD. TUBING .62 O.D.	1
13	P24281	HYD. TUBING .62 O.D.	2
12	P24935	HYD. TUBING .38 O.D.	1
11	P21331	HYD. TUBING .62 O.D.	1
10	P18972	HYD. TUBING .75 O.D.	1
9	P18971	HYD. TUBING .62 O.D.	1
8	P18970	HYD. TUBING .38 O.D.	2
7	P19064	SAFETY VALVE, BOOM	1
6	P24776	SAFETY VALVE, HOIST	2
5	P17686	SAFETY VALVE, TILT	1
4	P24743	MASTER CARR. TILT CYL.	1
3	P24740	CARRIAGE TILT CYL.	1
2	P20131	BOOM EXTENSION CYL.	1
1	P24277	HOIST CYLINDER	2

ITEM	PART NO.	DESCRIPTION	REQ.
88	COM'L	LOCKWASHER, 3/8"	2
87	COM'L	NUT, HX. 3/8"-16	2
86	COM'L	JAM NUT, HX. 1/4"-20	5
85	COM'L	NUT, HX. 1/4"-20	9
84	COM'L	FLATWASHER, 1/4"	3
83	COM'L	STARWASHER, 1/4"	5
82	COM'L	LOCKWASHER, 1/4"	4
81	COM'L	BOLT, HX. 1/4"-20 NC × 1 1/2"	4
80	182898	HOSE TRAY	1
79	179648	JUNCTION BAR	1
78	16122A	WEDGE BLOCK	1
77	157804	TUBE SUPPORT	1
76	P17554	TUBE CLAMP	8
75	P21627	HEX CAP	2
74	P18958	TEE, O-RING	3
73	P18925	TEE, FEMALE RUN	3
72	P21579	90° ELBOW, SWIVEL	2
71	P19248	90° ELBOW, O-RING	2
70	P19055	90° ELBOW, O-RING	1
69	P19031	90° ELBOW	2
68	P18959	90° ELBOW	4
67	P18957	90° ELBOW, SWIVEL	1
66	P18935	90° ELBOW, O-RING	1
65	P18924	90° ELBOW, O-RING	2
64	P17907	90° ELBOW	5

SAFETY VALVE SEAL KITS
FOR P17686, USE SEAL KIT P21486.
FOR P24776, USE SEAL KIT P21487.
FOR P19064, USE SEAL KIT P21488.

NOTES:
A) TWIN HOSE

LULL Engineering Co., Inc. — ST. PAUL, MINNESOTA 55121

DRAWN BY: Jeff Kent — SIN 1041 THRU

DRAWING TITLE: UPPER HYDRAULIC ASSEMBLY MODEL 844

SCALE: D

DRAWING NO. 16808-2

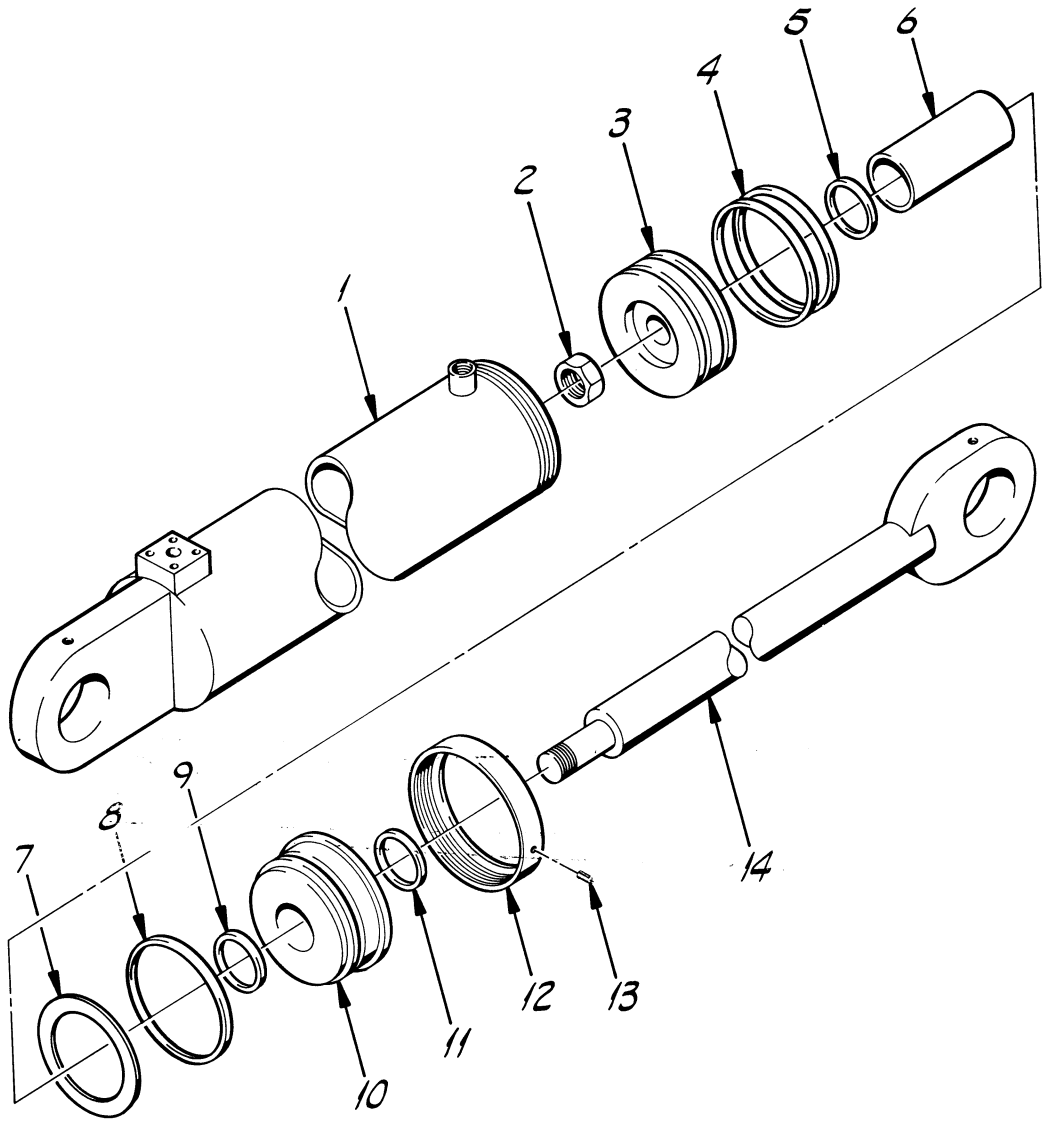

ITEM	PART NO.	DESCRIPTION	REQ.
REF	P19523	SEAL KIT	1
14	P19206	SHAFT WELDMENT	1
13	P19208	LOCKSCREW	1
12	P19207	RETAINING NUT	1
11	P19209	DUST SEAL	1
10	P19212	END GLAND	1
9	P19210	URETHANE U-CUP	1
8	P19211	O-RING	1
7	P20055	BACK-UP RING	1
6	P19213	STROKE BLOCK	1
5	P19214	O-RING	1
4	P19215	URETHANE U-CUP	2
3	P19216	PISTON	1
2	P19217	LOCKNUT	1
1	P19205	TUBE WELDMENT	1

LULL Engineering Co., Inc. 10/83

ST. PAUL, MINNESOTA 55121

DRAWN BY Jeff Daub

S/N 101 - 1040

DRAWING TITLE

HOIST CYLINDER ASSEMBLY MODEL 844

P19169

SCALE B

DRAWING NO. 16837

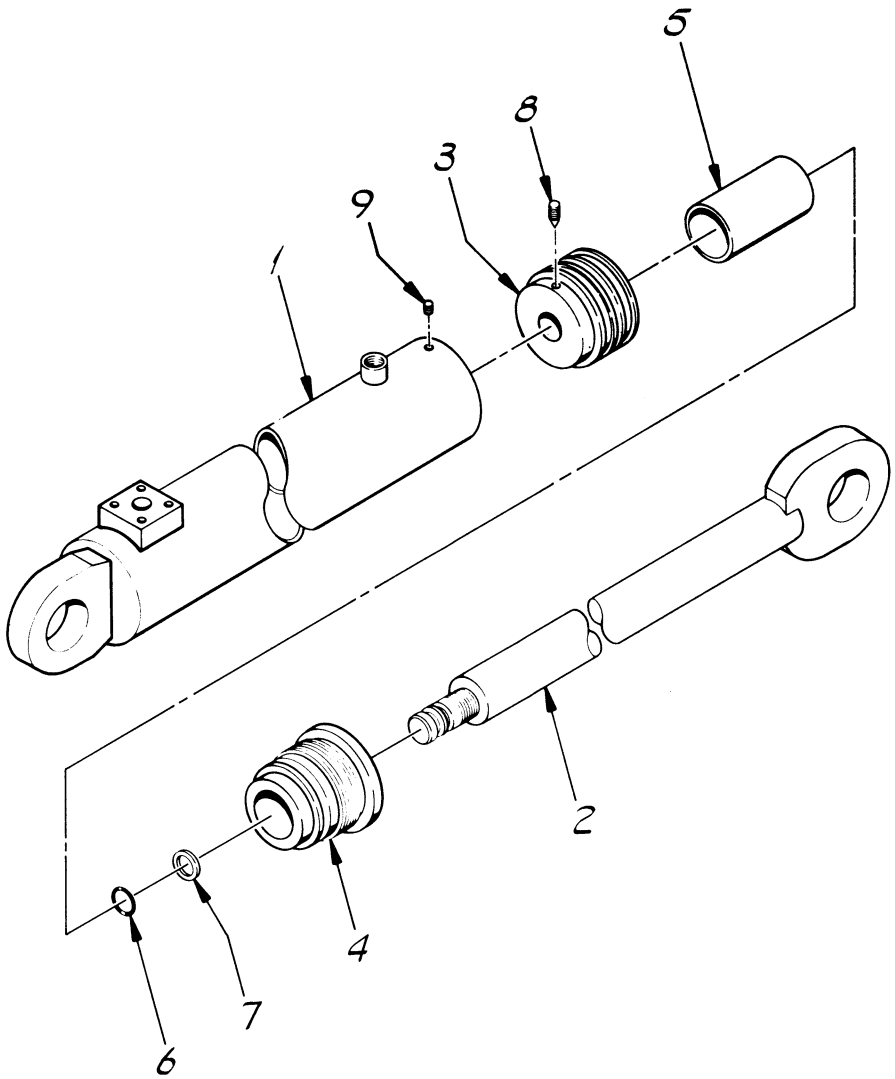

ITEM	PART NO	DESCRIPTION	REQ.
REF	P24438	SEAL KIT	1
9	P24433	SET SCREW	1
8	P24435	SET SCREW	1
7	P24423	BACK-UP RING	2
6	P24416	O-RING	1
5	P24413	STROKE LIMITER	1
4	P24399	ROD BEARING	1
3	P24387	PISTON	1
2	P24374	ROD WELDMENT	1
1	P24359	BARREL WELDMENT	1

LULL 9/83 Engineering Co., Inc.
ST. PAUL, MINNESOTA 55121

DRAWN BY Jeff Naul

S/N 1041 THRU

DRAWING TITLE
HOIST CYLINDER ASSEMBLY MODEL 844

P24277

SCALE B

DRAWING NO. 16837-1

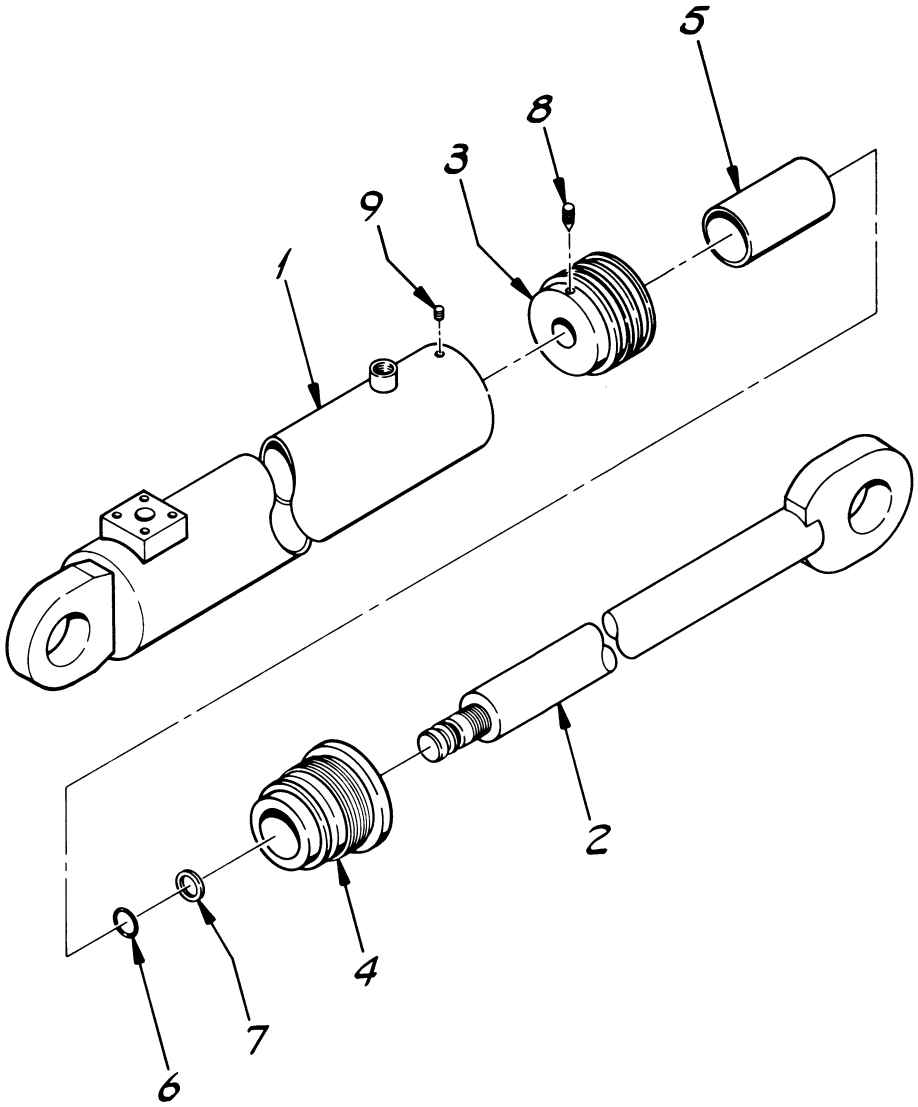

NOTE:

A) ALSO USED ON S/N 1866-67 & 1874-75.

ITEM	PART NO.	DESCRIPTION	REQ.
REF	P27295	SEAL KIT	1
9	P24433	SET SCREW	1
8	P24435	SET SCREW	1
7	P24423	BACK-UP RING	2
6	P24416	O-RING	1
5	P27261	STROKE LIMITER	1
4	P27276	ROD BEARING	1
3	P24387	PISTON	1
2	P27237	ROD WELDMENT	1
1	P24359	BARREL WELDMENT	1

LULL CORPORATION

ST. PAUL, MINNESOTA 55121

DRAWN BY Jeff Paul

S/N 1888 THRU (A)

DRAWING TITLE

HOIST CYLINDER ASSEMBLY MODEL 844

9/87

P27563

SCALE B

DRAWING NO. 16837-2

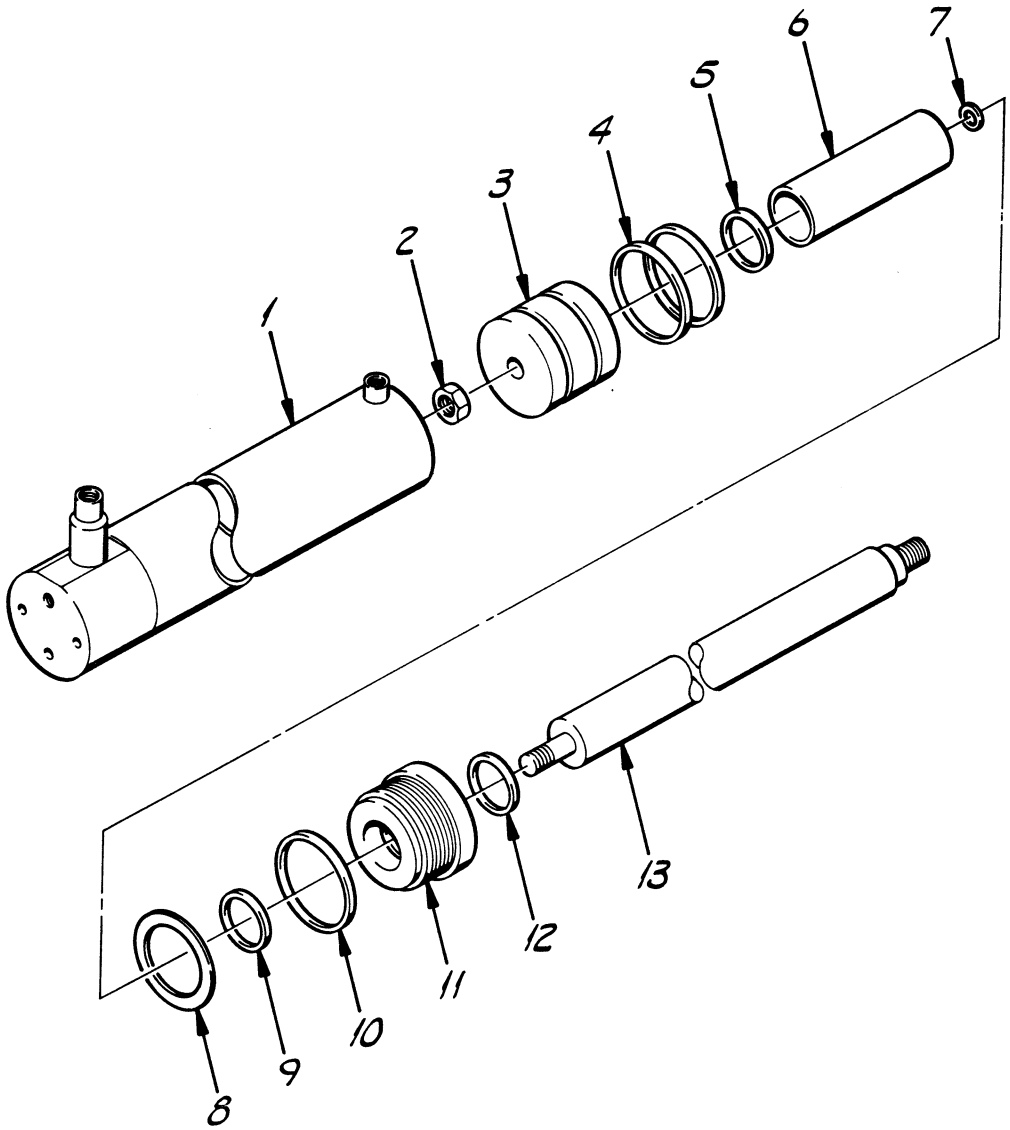

ITEM	PART NO.	DESCRIPTION	REQ.
REF	P19525	SEAL KIT	1
13	P19236	SHAFT	1
12	P19209	DUST SEAL	1
11	P19220	END GLAND	1
10	P19221	O-RING	1
9	P19210	URETHANE U-CUP	1
8	P20054	BACK-UP RING	1
7	P19214	O-RING	1
6	P19237	STROKE BLOCK	1
5	P20061	O-RING	1
4	P19223	URETHANE U-CUP	2
3	P19224	PISTON	1
2	P19217	LOCKNUT	1
1	P19235	TUBE WELDMENT	1

LULL 10/83 Engineering Co., Inc.
ST. PAUL, MINNESOTA 55121

DRAWN BY Jeff Daub

S/N 101 - 1040

DRAWING TITLE
BOOM EXTENSION CYLINDER ASSEMBLY MODEL 844

P19172

SCALE B

DRAWING NO. 16838

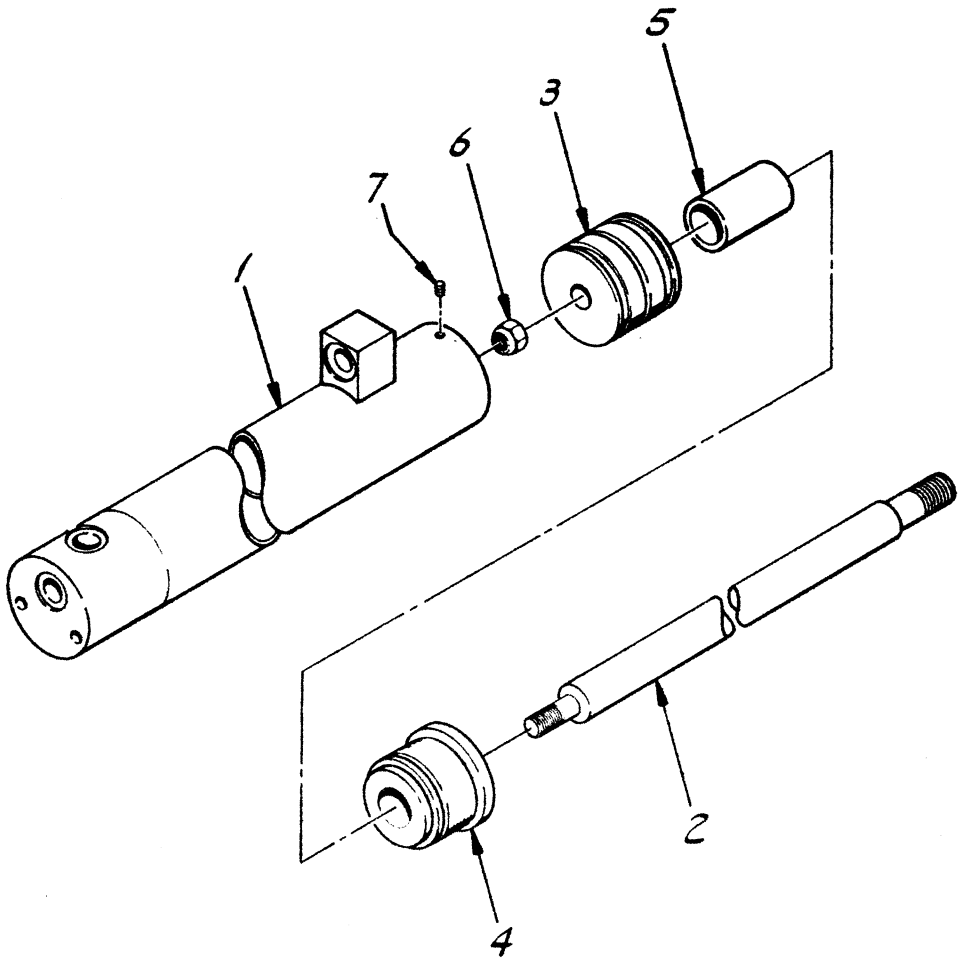

ITEM	PART NO	DESCRIPTION	REQ.
REF	P24440	SEAL KIT	1
7	P24433	SET SCREW	1
6	P24429	NUT	1
5	P24407	STROKE LIMITER	1
4	P24390	ROD BEARING	1
3	P24389	PISTON	1
2	P24377	ROD	1
1	P24363	BARREL WELDMENT	1

LULL Engineering Co., Inc.
ST. PAUL, MINNESOTA 55121

DRAWN BY: Jeff Daub

S/N 1041 THRU

DRAWING TITLE:
BOOM EXTENSION CYLINDER ASSEMBLY MODEL 844

P20131

SCALE: B

DRAWING NO: 16838-1

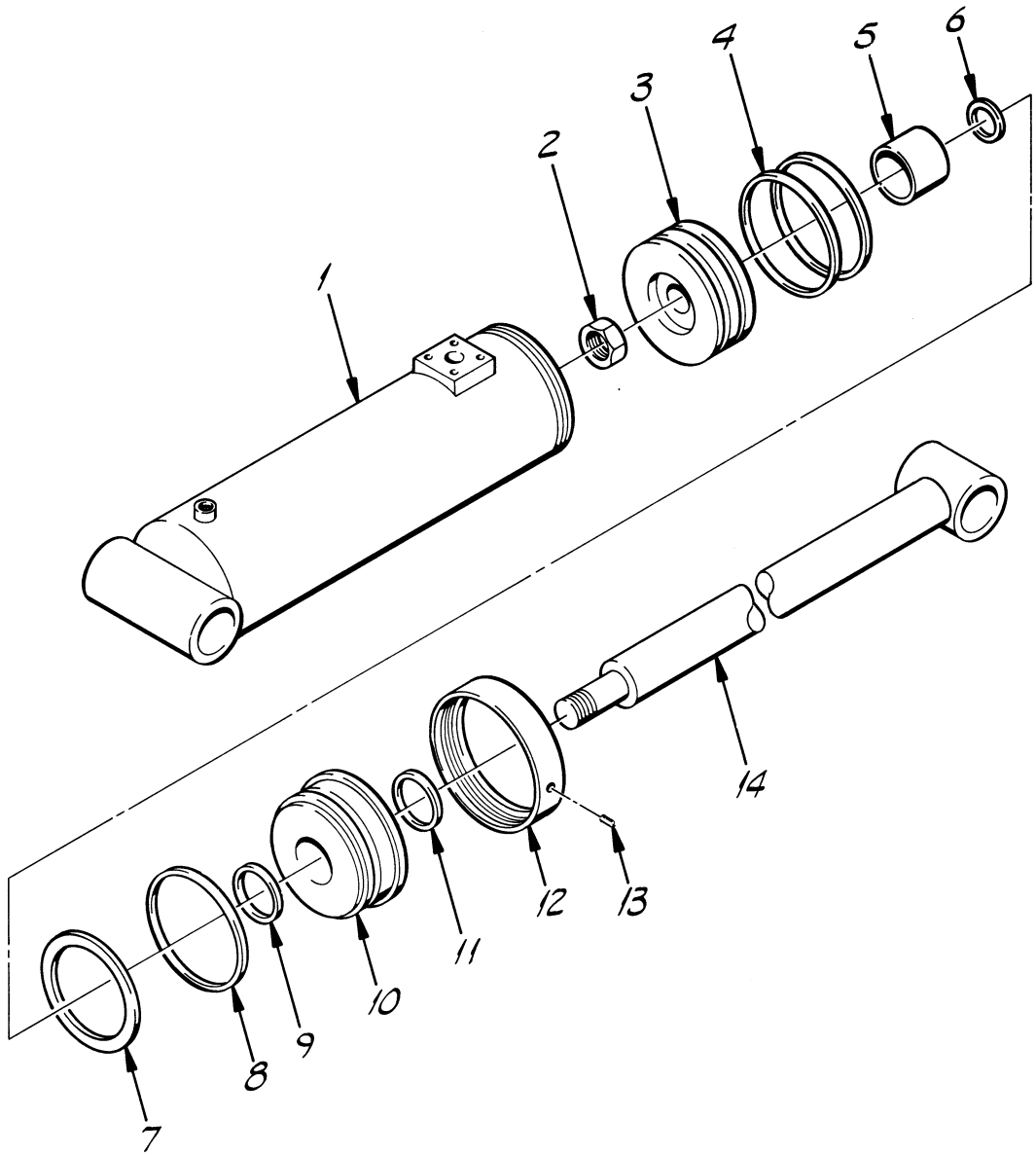

ITEM	PART NO.	DESCRIPTION	REQ.
REF	P19522	SEAL KIT	1
14	P19244	SHAFT WELDMENT	1
13	P19208	LOCKSCREW	1
12	P19207	RETAINING NUT	1
11	P19241	DUST SEAL	1
10	P19240	END GLAND	1
9	P19242	URETHANE U-CUP	1
8	P19211	O-RING	1
7	P20055	BACK-UP RING	1
6	P19214	O-RING	1
5	P19245	STROKE BLOCK	1
4	P19215	URETHANE U-CUP	2
3	P19216	PISTON	1
2	P19217	LOCKNUT	1
1	P19243	TUBE WELDMENT	1

LULL Engineering Co., Inc. 10/83

ST. PAUL, MINNESOTA 55121

DRAWN BY Jeff Daub

S/N 101 - 1040

DRAWING TITLE

FRONT CARRIAGE TILT CYLINDER ASSEMBLY MODEL 844

P19174

SCALE B

DRAWING NO. 16839

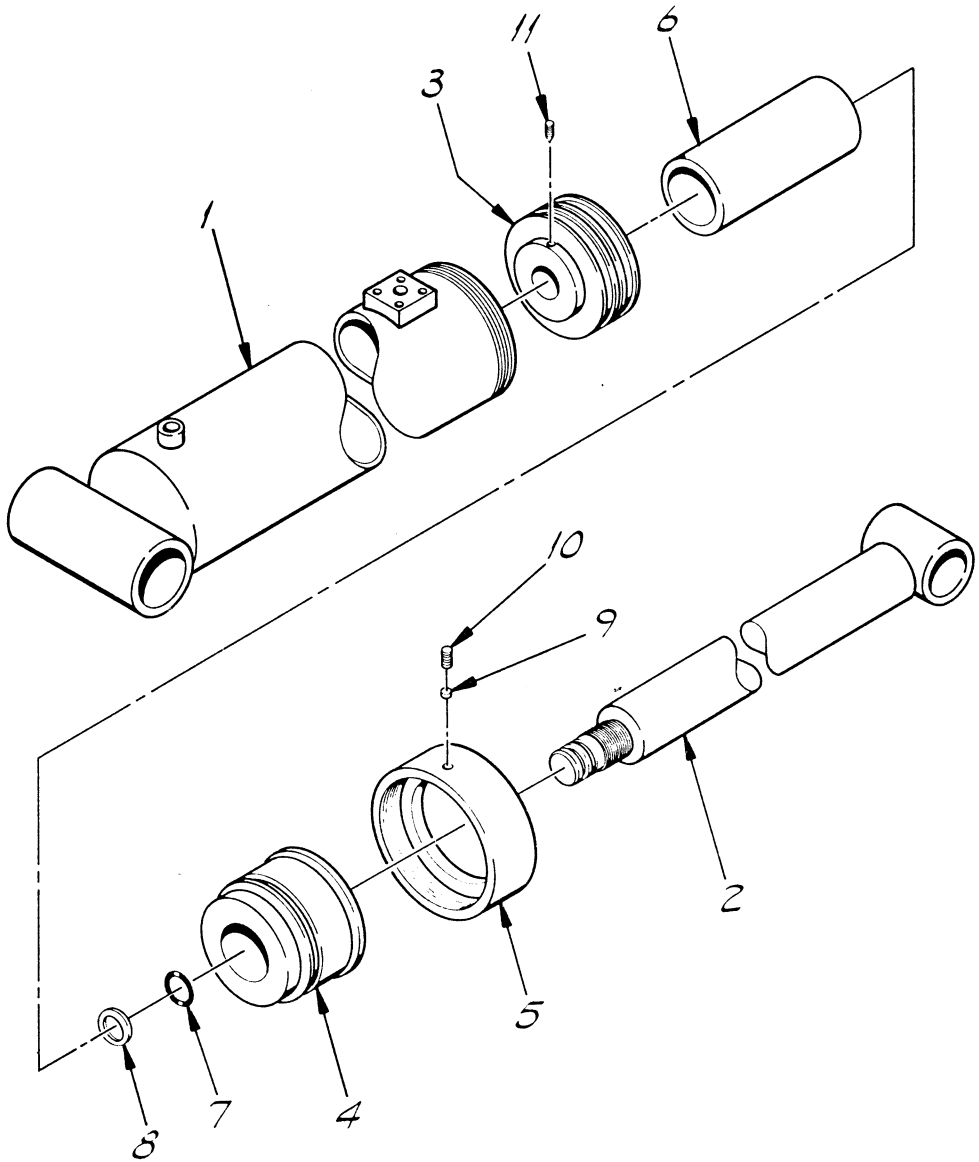

ITEM	PART NO	DESCRIPTION	REQ.
REF	P24439	SEAL KIT	1
11	P24435	SET SCREW	1
10	P24436	SET SCREW	1
9	P24431	NYLON PLUG	1
8	P24426	BACK-UP RING	2
7	P24420	O-RING	1
6	P24919	STROKE LIMITER	1
5	P24402	ROD BEARING RETAINER	1
4	P24910	ROD BEARING	1
3	P24379	PISTON	1
2	P24906	ROD WELDMENT	1
1	P24896	BARREL WELDMENT	1

LULL 9/83 Engineering Co., Inc.
ST. PAUL, MINNESOTA 55121

DRAWN BY Jeff Vaul

S/N 1041 THRU

DRAWING TITLE
FRONT CARRIAGE TILT CYLINDER ASSEMBLY MODEL 844

P24743

SCALE B

DRAWING NO. 16839-1

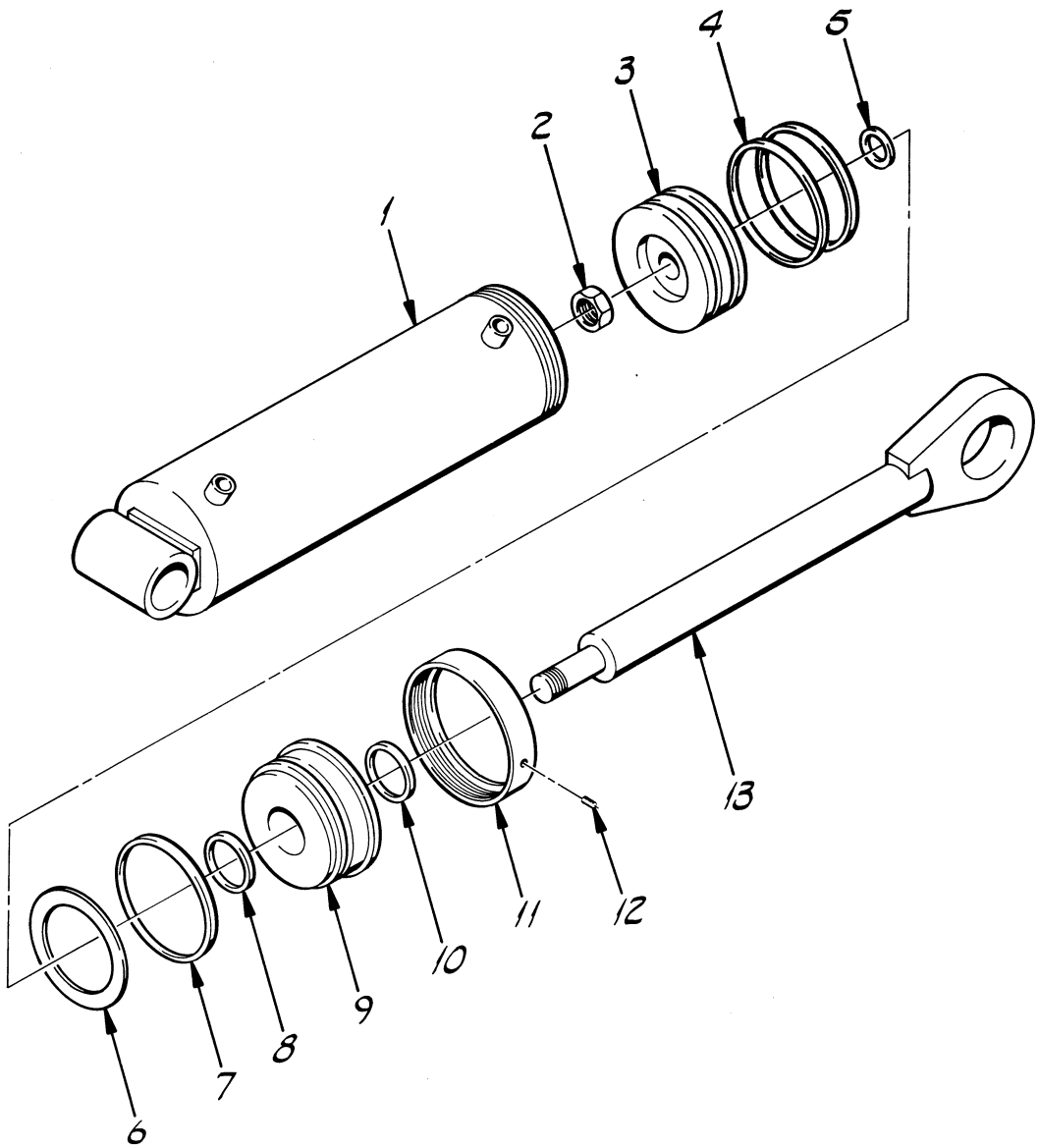

ITEM	PART NO.	DESCRIPTION	REQ.
REF	P19522	SEAL KIT	1
13	P19239	SHAFT WELDMENT	1
12	P19208	LOCKSCREW	1
11	P19207	RETAINING NUT	1
10	P19241	DUST SEAL	1
9	P19240	END GLAND	1
8	P19242	URETHANE U-CUP	1
7	P19211	O-RING	1
6	P20055	BACK-UP RING	1
5	P19214	O-RING	1
4	P19215	URETHANE U-CUP	2
3	P19216	PISTON	1
2	P19217	LOCKNUT	1
1	P19238	TUBE WELDMENT	1

LULL 10/83 Engineering Co., Inc.
ST. PAUL, MINNESOTA 55121

DRAWN BY Jeff Daub

S/N 101 - 1040

DRAWING TITLE
REAR CARRIAGE TILT CYLINDER ASSEMBLY
MODEL 844

P19173

SCALE B

DRAWING NO. 16840

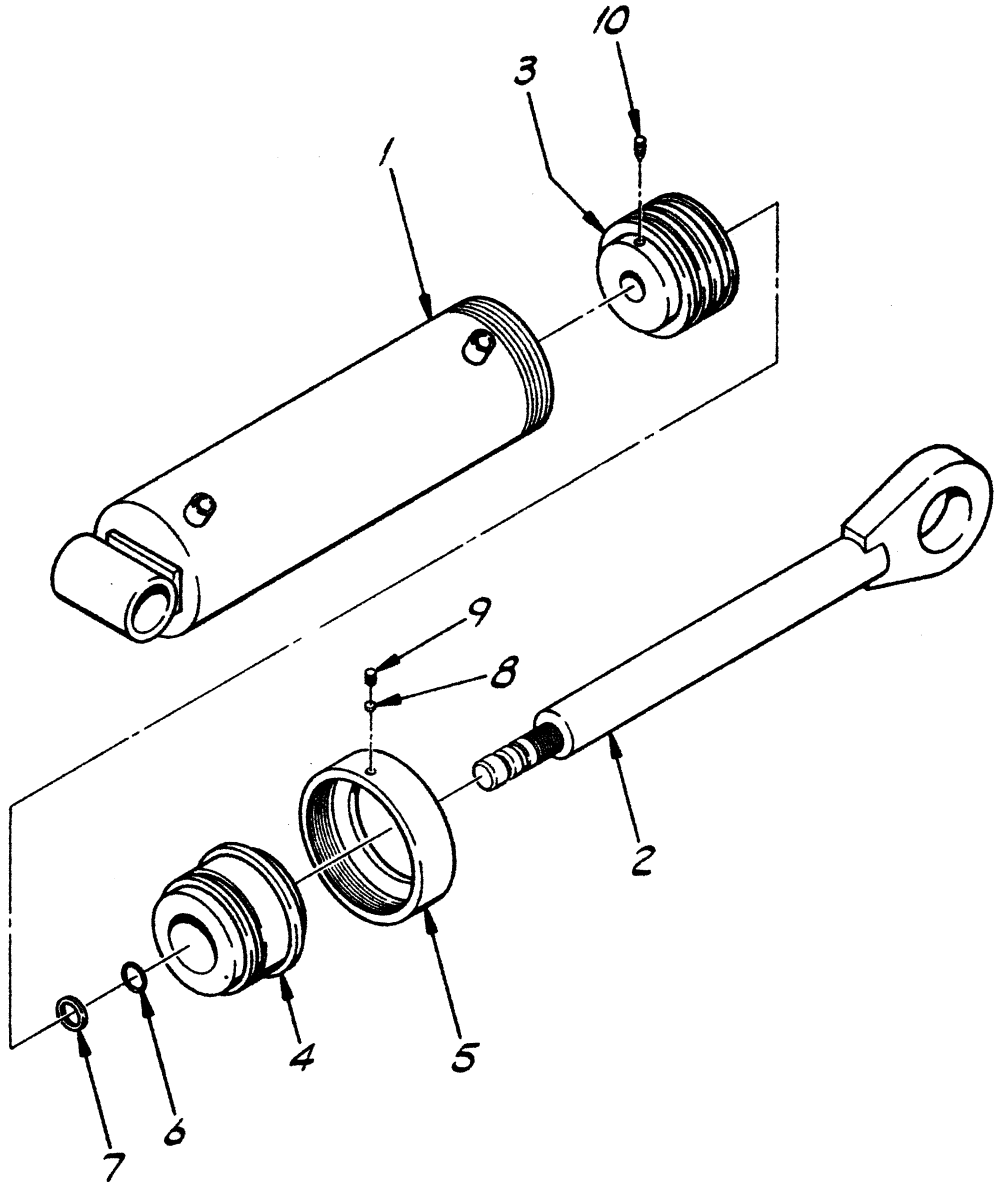

ITEM	PART NO.	DESCRIPTION	REQ.
REF	P24439	SEAL KIT	1
10	P24435	SET SCREW	1
9	P24434	SET SCREW	1
8	P24431	NYLON PLUG	1
7	P24426	BACK-UP RING	2
6	P24420	O-RING	1
5	P24402	ROD BEARING RETAINER	1
4	P24910	ROD BEARING	1
3	P24379	PISTON	1
2	P24903	ROD WELDMENT	1
1	P24893	BARREL WELDMENT	1

LULL Engineering Co., Inc.
ST. PAUL, MINNESOTA 55121

DRAWN BY Jeff Naub

S/N 1041 THRU

DRAWING TITLE
REAR CARRIAGE TILT CYLINDER ASSEMBLY MODEL 844

P24740

SCALE B

DRAWING NO. 16840-1

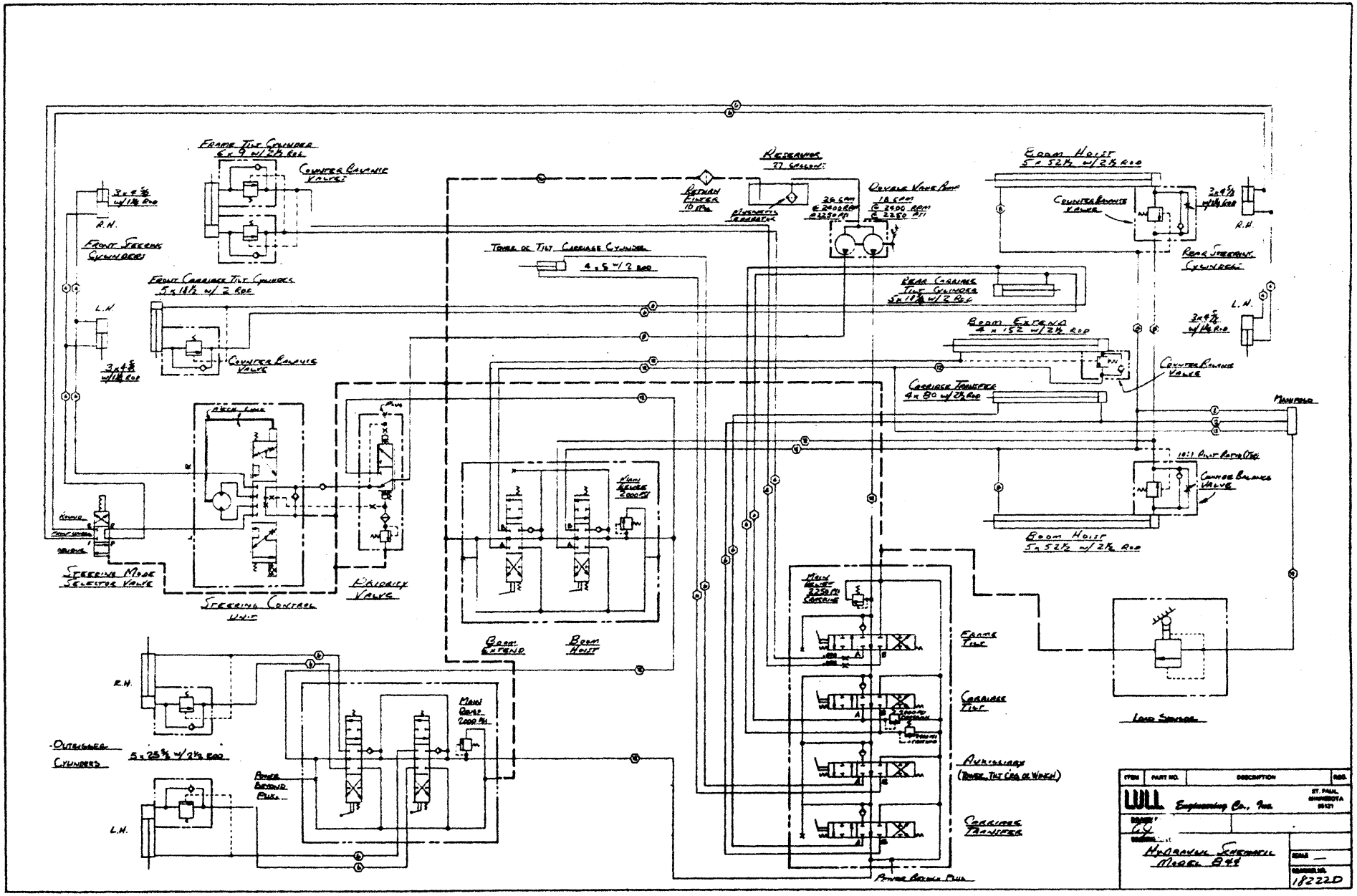

Frame Tilt Cylinder
6 x 9 w/ 2½ Rod
Counter Balance Valve
Front Steering Cylinders
R.H.
L.H.
Front Carriage Tilt Cylinder
5 x 18½ w/ 2 Rod
Counter Balance Valve
Steering Mode Selector Valve
Steering Control Unit
Priority Valve
Tower or Tilt Carriage Cylinder
4 x 5 w/ 2 Rod
Return Filter 10 Mic.
Reservoir
27 Gallons
Double Vane Pump
Rear Carriage Tilt Cylinder
Boom Extend
4 x 152 w/ 2½ Rod
Carriage Transfer
4 x 80 w/ 2½ Rod
Boom Hoist
5 x 52½ w/ 2½ Rod
Counter Balance Valve
Rear Steering Cylinders
Manifold
10:1 Pilot Ratio (Typ.)
Counter Balance Valve
Boom Hoist
5 x 52½ w/ 2½ Rod
Main Relief 2000 PSI
Boom Extend
Boom Hoist
Main Relief 2250 PSI Capacity
Frame Tilt
Carriage Tilt
Auxiliary (Tower, Tilt Cyl. or Winch)
Carriage Transfer
Power Beyond Pull
Load Sensor
Outrigger Cylinders
5 x 25⅝ w/ 2½ Rod
Main Relief 2000 PSI
Power Beyond Pull
ITEM
PART NO.
DESCRIPTION
REQ.
LULL Engineering Co., Inc.
ST. PAUL, MINNESOTA 55121
Hydraulic Schematic Model B44
18222D

REV	ECO	REVISION DESCRIPTION	BY	APPR	DATE

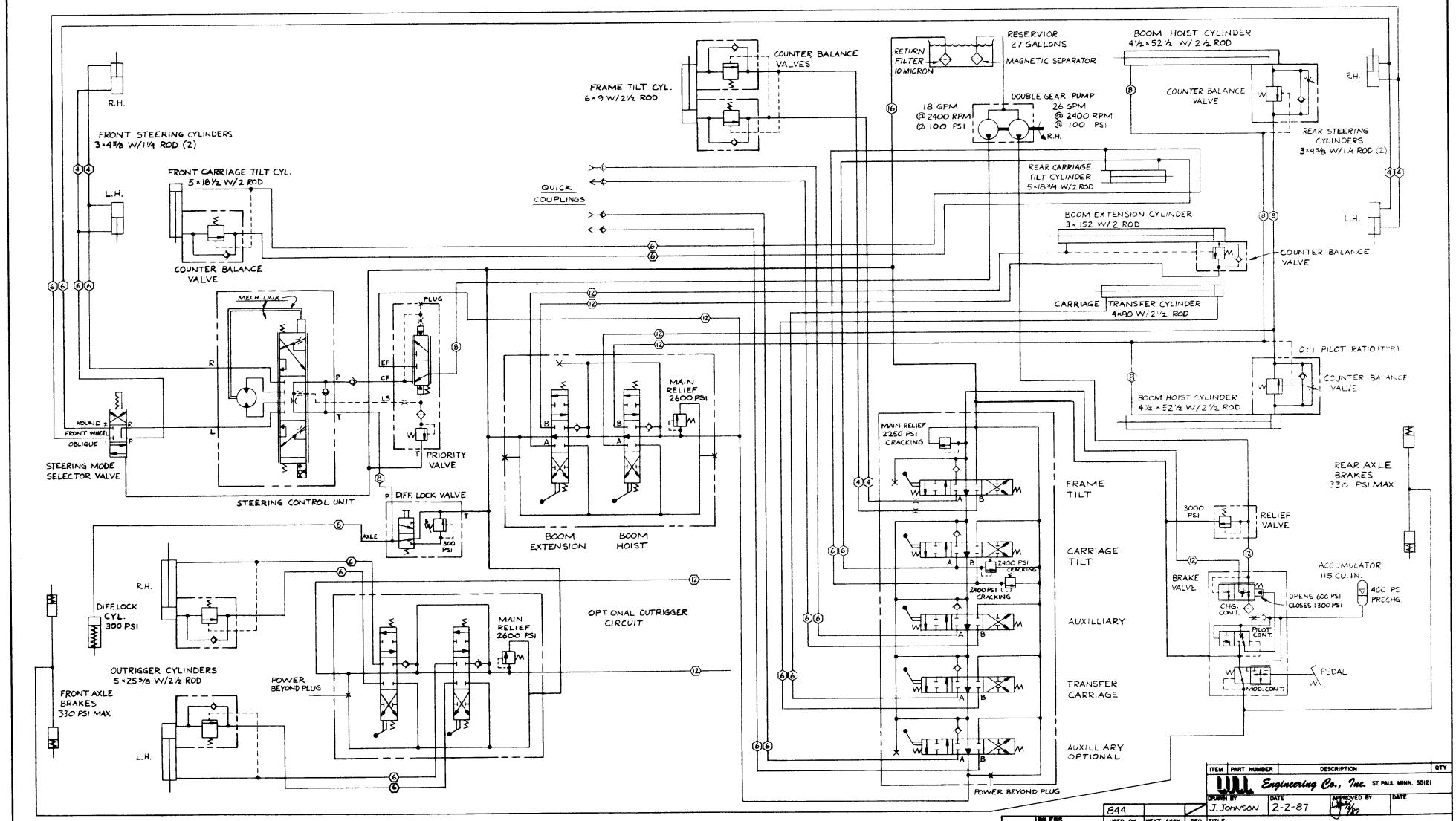

⬡ - INDICATES FLUID CONDUCTOR SIZE IN SIXTEENTHS

ITEM	PART NUMBER	DESCRIPTION	QTY

W.W. Engineering Co., Inc. ST. PAUL, MINN. 55121

DRAWN BY	DATE	APPROVED BY	DATE
J. JOHNSON	2-2-87		

TITLE: HYDRAULIC SCHEMATIC
S/N 1722, 1724 THRU

USED ON	NEXT ASSY	REQ
844		

MATERIAL

E.C.O. RELEASE

UNLESS OTHERWISE SPECIFIED: DIMENSIONAL TOLERANCES ARE 2 PLACE DECIMAL ± .03, 3 PLACE DECIMAL ± .005, FRACTIONAL ± 1/16, ANGULAR ± 1°

SCALE | SHEET | OF | DRAWING NUMBER 24956D | REV

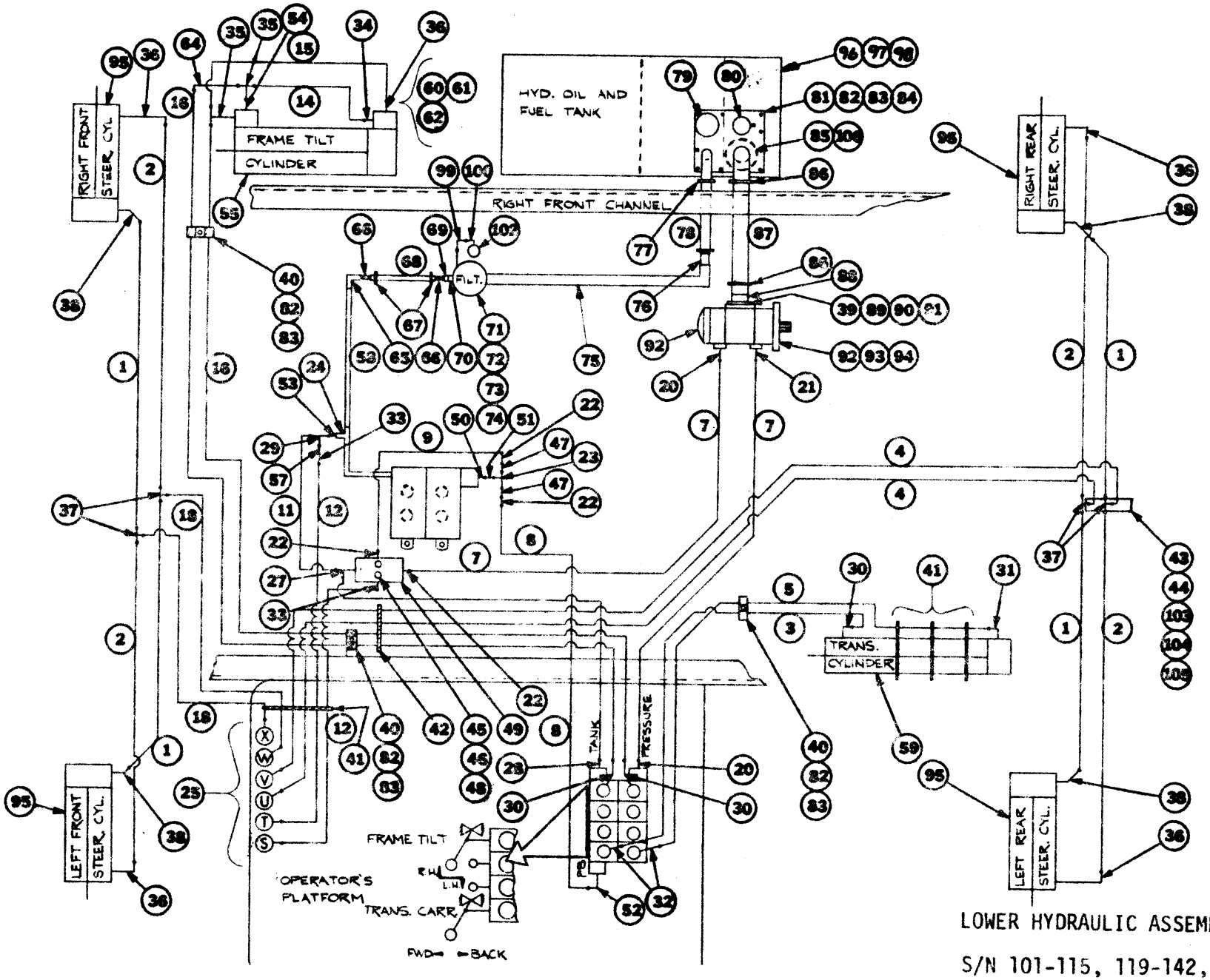

LOWER HYDRAULIC ASSEMBLY

S/N 101-115, 119-142, 144

MODEL 844 16809

ITEM	PART	DESCRIPTION	QTY
1	P18892	Hose, 1/4" x 17"	4
2	P18893	Hose, 1/4" x 22"	4
3	P18894	Hose, 3/8" x 118"	1
4	P18895	Hose, 3/8" x 117"	2
5	P18896	Hose, 3/8" x 56"	1
6			
7	P18921	Hose, 3/4" x 23"	2
8	P18922	Hose, 3/4" x 23-1/2"	1
9	P19044	Hose, 3/4" x 11-1/4"	1
10	P19047	Hose, 1/2" x 23"	1
11	P19046	Hose, 3/8" x 20"	1
12	P19048	Hose, 3/8" x 34"	2
13			
14	P18905	Hose, 1/4" x 12-3/4"	1
15	P18906	Hose, 1/4" x 24"	1
16	P19049	Hose, 1/4" x 104"	2
17			
18	P18857	Hose, 3/8" x 42-3/4"	2
19			
20	P17805	Connector	2
21	P17802	90° Elbow, Swivel	1
22	P17804	Adapter	4
23	P10173	Tee, Pipe	1
24	P19052	Tee, Reducing	1
25	P18931	90° Elbow, Bulkhead	
26			
27	P18932	Tee	1
28	P19997	Connector	1
29	P10106	Tee, Pipe	1
30	P18935	90° Elbow	3
31	P18936	Connector	1
32	P18937	Connector, O-Ring	2
33	P18938	Connector	1
34	P18939	Connector	1
35	P19053	Tee	2
36	P18941	90° Elbow	5
37	P18942	Bulkhead Tee	4
38	P18943	45° Elbow	4
39	P12971	O-Ring	1
40	P17553	Clamp	6
41	P17987	Ty-Rap, Cable Ties (19" Lg)	4
42	P17989	Ty-Rap, Cable Ties (7-5/16" Lg.)	1
43	Com'l	Lock Washer, 3/8	1
44	Com'l	Nut, 3/8-16	1
45	Com'l	Bolt, Hx, 1/4-20 x 2-3/4	2
46	P18722	Rubber Mount	2
47	P10180	Reducer Bushing	2
48	Com'l	Flat Washer, 1/4	2
49	P18126	Priority Valve	1
50	P19054	Adapter	1
51	P17179	Nipple, Close	1
52	P19055	90° Elbow	1
53	P10106	Tee, Pipe	1

ITEM	PART	DESCRIPTION	QTY
54	P10691	Reducer Bushing	1
55	P19170	Cylinder Frame Tilt Assembly	1
56	P19056	90° Elbow, O-Ring	1
57	P10120	Reducer Bushing	1
58	N10695	Nipple, Long	1
59	P19171	Transfer Cylinder Assembly	1
60	P17846	Safety Valve	1
61	Com'l	Bolt, Hx, 5/16-20 x 2-1/2 (Gr 5)	8
62	Com'l	Lockwasher, 5/16	8
63			
64	P18957	90° Elbow	1
65	P10129	90° Elbow, Pipe	
66	N10090	Half Nipple	2
67	P10270	Hose Clamp	2
68	P17840	Hose, Green Stripe	7"
69	P10219	45° Elbow, Street	1
70	P10144	Reducer Bushing	1
71	P13587	Filter Base	1
72	P13586	Filter Element	1
73	Com'l	Bolt, 5/16-18 x 1"	2
74	Com'l	Lockwasher, 5/16	2
75	P10231	90° Elbow, Street	1
76	N10696	Nipple	1
77	P10600	Hose Clamp	2
78	P19075	Hose, Green Stripe	11"
79	P18819	Breather, Oil Filter	1
80	P18823	Cap & Dipstick	1
81	16239C	Manifold, Hydraulic Tank Cover	1
82	Com'l	Nut, Hx, 5/16-18	15
83	Com'l	Lockwasher, 5/16	15
84	P18824	Seal (For S/N 101 use P14099)	1
85	P18822	Filter, Suction Magnetic	1
86	P10553	Clamp, Hose	2
87	P16609	Hose, Green Stripe	7"
88	16290B	Elbow, Pump Inlet	1
89	P17672	Flange	2
90	Com'l	Bolt, Hx, 1/2-13 x 1-1/2	4
91	Com'l	Lockwasher, 1/2	4
92	P18192	Pump	1
93	Com'l	Bolt, Hx, 1/2-13 x 1-1/4	2
94	Com'l	Lockwasher, 1/2	2
95	REF	Cylinder, Steering	4
96	P10555	Plug, Fuel	1
97	P10216	Plug, Hyd. Oil	1
98	15405D	Tank, Fuel & Hyd. Oil	1
99	P10201	90° Elbow, Street	1
100	P15093	45° Elbow, Street	1
101			
102	P13588	Gauge	1
103	16271A	Bracket, Hose Support Rear Axle	1
104	Com'l	Bolt, Hx, 3/8-18 x 1/2	1
105	Com'l	Nut, Hx, 5/16-18	1
106	P16590	O-Ring	1

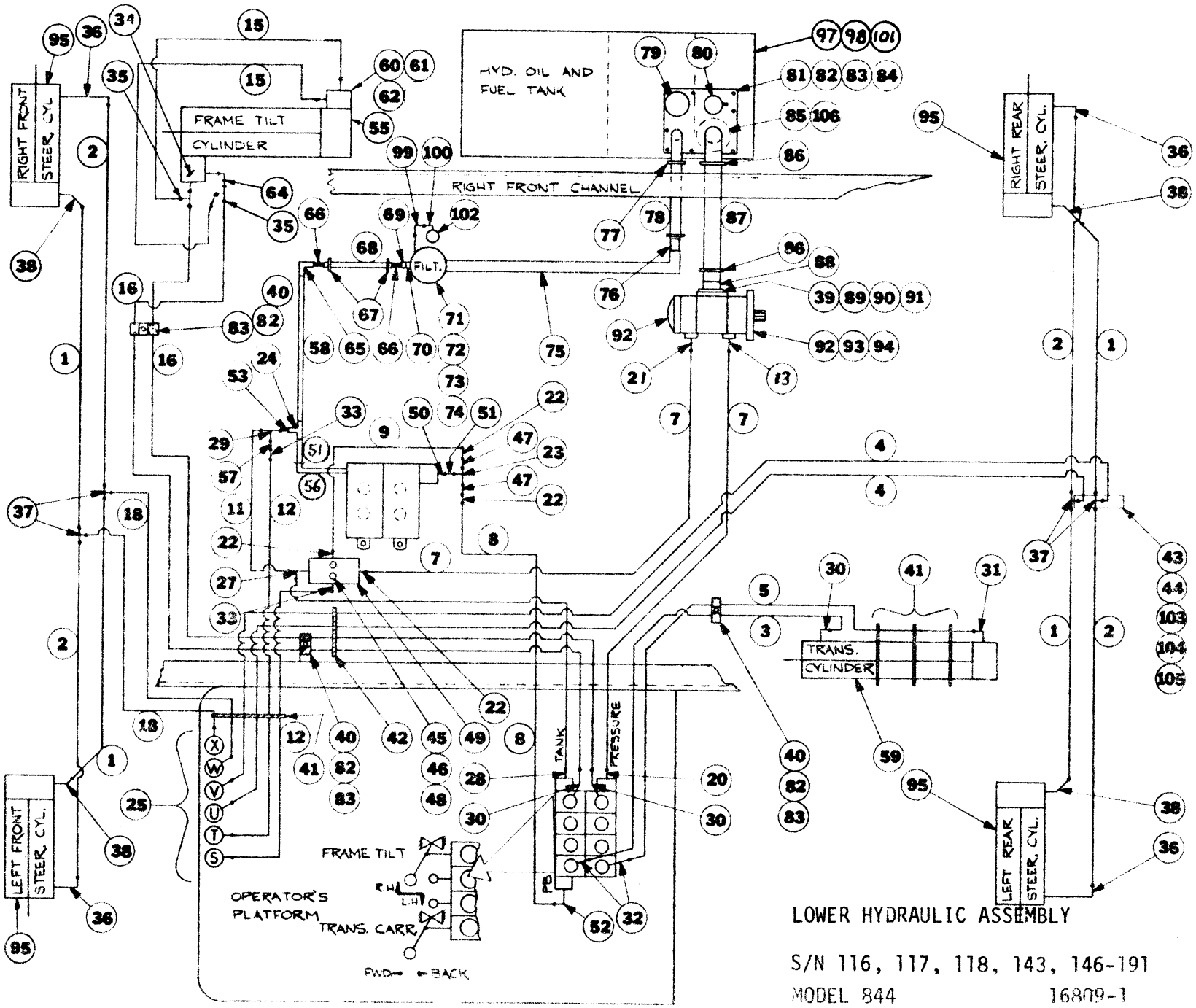

LOWER HYDRAULIC ASSEMBLY

S/N 116, 117, 118, 143, 146-191

MODEL 844 16809-1

ITEM	PART	DESCRIPTION	QTY
1	P18892	Hose, 1/4" x 17"	4
2	P18893	Hose, 1/4" x 22"	4
3	P18894	Hose, 3/8" x 118"	1
4	P18895	Hose, 3/8" x 117"	2
5	P18896	Hose, 3/8" x 56"	1
6			
7	P18921	Hose, 3/4" x 23"	2
8	P18922	Hose, 3/4" x 23-1/2"	1
9	P19044	Hose, 3/4" x 11-1/4"	1
10	P19047	Hose, 1/2"x 23"	1
11	P19046	Hose, 3/8"x 20"	1
12	P19048	Hose, 3/8"x 34"	2
13			
14			
15	P18906	Hose, 1/4" x 24"	2
16	P19049	Hose, 1/4" x 104"	2
17			
18	P18857	Hose, 3/8"x 42-3/4"	2
19			
20	P17805	Connector	2
21	P17802	90° Elbow, Swivel	1
22	P17804	Adapter	4
23	P10173	Tee, Pipe	1
24	P19052	Tee, Pipe	1
25	P18931	90° Elbow, Bulkhead	
26			
27	P18932	Tee	1
28	P18937	Connector	1
29	P10106	Tee, Pipe	1
30	P18935	90° Elbow	3
31	P18936	Connector	1
32	P18937	Connector, O-Ring	2
33	P18938	Connector	1
34	P17846	Safety Valve	1
35	P19412	Swivel Tee	2
36	P18941	90° Elbow	4
37	P18942	Tee, Bulkhead	4
38	P18943	45° Elbow	4
39	P12971	O-Ring	1
40	P17553	Clamp	6
41	P17987	Ty-Rap, Cable Ties (19" Lg)	4
42	P17989	Ty-Rap, Cable Ties (7-5/16" Lg)	1
43	Com'l	Lockwasher, 3/8	1
44	Com'l	Nut, Hx, 3/8-16	1
45	Com'l	Bolt, Hx, 1/4-20 x 2-3/4	2
46	15832	Rubber Mount	2
47	P10180	Reducer Bushing	2
48	Com'l	Flat Washer, 1/4	2
49	16493	Priority Valve	1
50	P19054	Adapter	1
51	P17179	Nipple, Close	
52	P19055	90° Elbow	1
53	P10106	Tee, Pipe	1

ITEM	PART	DESCRIPTION	QTY
54	P10610	Nipple	1
55	P19170	Frame Tilt Cylinder Assembly	1
56	P19056	90° Elbow, O-Ring	1
57	P10120	Reducer Bushing	1
58	N10695	Nipple, Long	1
59	P19171	Transfer Cylinder Assembly	1
60	P17846	Safety Valve	1
61	Com'l	Bolt, Hx, 5/16-20 x 2-1/5 (Gr 5)	
62	Com'l	Lockwasher, 5/16	
63			
64	P18957	90° Elbow	2
65	P10129	Elbow, 90°	
66	N10090	Half Nipple	2
67	P10270	Hose Clamp	2
68	P17840	Hose, Green Stripe	7"
69	P10219	45° Elbow, Street	1
70	P10144	Reducer Bushing	1
71	P13587	Filter Base	1
72	P13586	Filter Element	1
73	Com'l	Bolt, Hx, 5/16-18 x 1"	2
74	Com'l	Lockwasher, 5/16	2
75	P10231	90° Elbow, Street	1
76	N10696	Nipple	1
77	P10553	Hose Clamp	2
78	P19075	Hose, Green Stripe	11
79	P18813	Breather	1
80	P18323	Cap & Dipstick	1
81	16289C	Manifold, Hydraulic Tank Cover	1
82	Com'l	Nut, Hx, 5/16-18	15
83	Com'l	Lockwasher, 5/16	15
84	P18824	Seal	1
85	P18822	Filter, Suction Magnetic	1
86	P10553	Clamp, Hose	2
87	P16609	Hose, Green Stripe	7
88	16290B	Elbow, Pump Inlet	1
89	14315	Flange	2
90	Com'l	Bolt, Hx, 1/2-13 x 1-1/2	4
91	Com'l	Lockwasher, 1/2	4
92	P18192	Pump	1
93	Com'l	Bolt, Hx, 1/2-13 x 1-1/4	2
94	Com'l	Lockwasher, 1/2	2
95	REF	Cylinder, Steering	4
96	P18825	Magnet	2
97	P10216	Plug, Hyd. Oil	1
98	15405D	Tank, Combination Fuel & Hyd. Oil	1
99	P10201	Elbow, Str 90°, 1/2 NPT	1
100	P15093	Elbow, Street 45°, 1/2 NPT	1
101	P10955	Plug, Fuel	1
102	P13588	Gauge	1
103	16271A	Bracket, Hose Support Rear Axle	1
104	Com'l	Bolt, Hx, 3/8-18 x 1/2	1
105	Com'l	Nut, Hx, 5/16-18	1
106	P16590	O-Ring	1

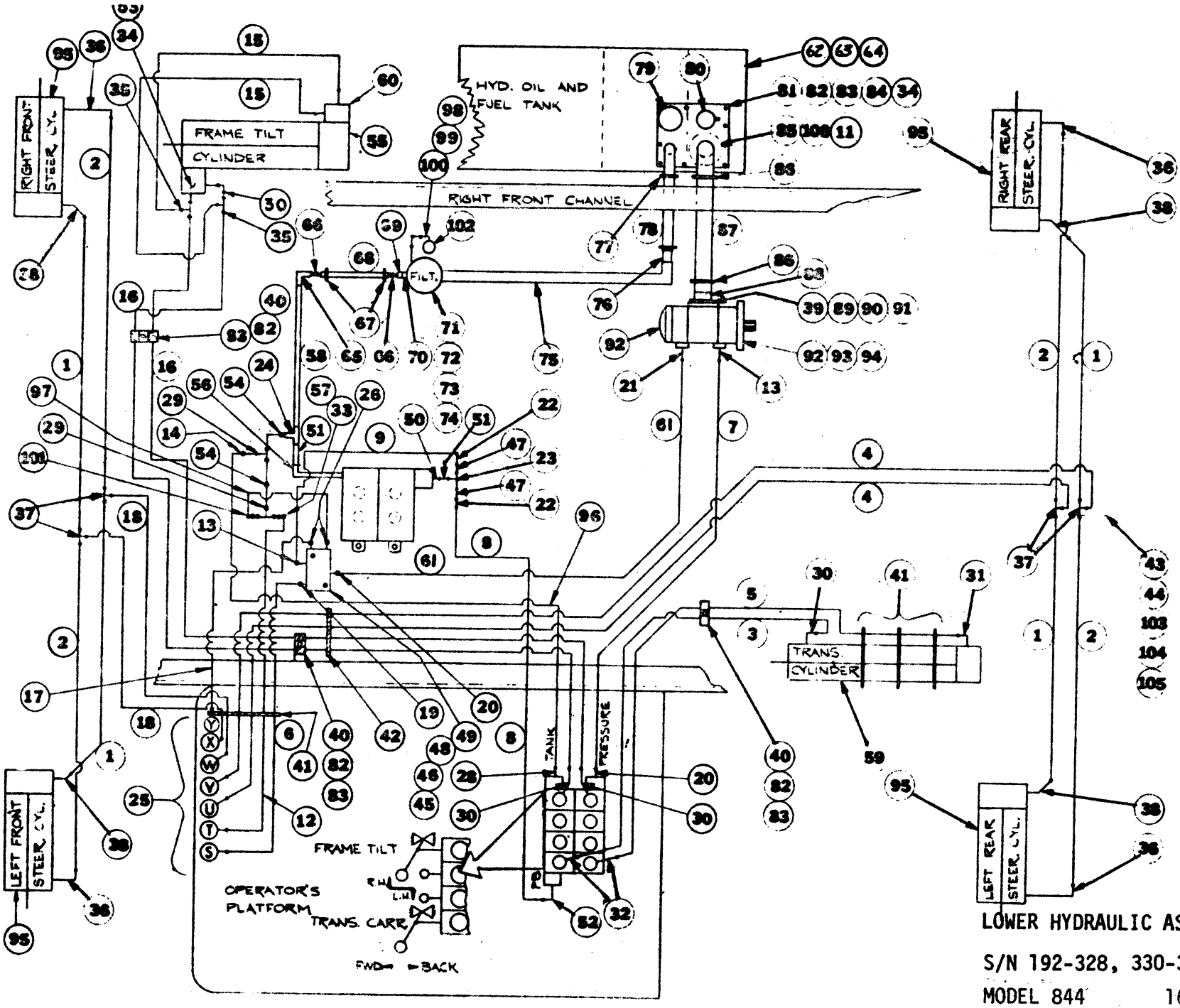

LOWER HYDRAULIC ASSEMBLY

S/N 192-328, 330-337

MODEL 844 16809-2

ITEM	PART	DESCRIPTION	QTY
1	P18892	Hose, 1/4" x 17"	4
2	P18893	Hose, 1/4" x 22"	4
3	P18894	Hose, 3/8" x 118"	1
4	P18895	Hose, 3/8" x 117"	2
5	P18896	Hose, 3/8" x 56"	1
6	P18904	Hose, 3/8" x 36"	1
7	P20411	Hose, 3/4" x 23"	1
8	P18922	Hose, 3/4" x 23-1/2"	1
9	P19494	Hose, 3/4" x 12"	1
10	P19047	Hose, 1/2" x 23"	1
11	P18825	Magnetic Straps	2
12	P19497	Hose, 3/8" x 32"	1
13	P17802	90° Elbow	2
14	P18933	Connector	1
15	P18906	Hose, 1/4" x 24"	2
16	P19049	Hose, 1/4" x 104"	2
17	P19496	Hose, 1/4" x 33"	1
18	P18857	Hose, 3/8" x 42-3/4"	2
19	P15406	Connector	1
20	P17805	Connector	1
21	P19147	45° Elbow	1
22	P17804	Adapter	3
23	P10173	Tee, Pipe	1
24	P19052	Tee, Pipe	1
25	P18931	90° Elbow, Bulkhead	2
26	P18960	Connector	
27			
28	P18997	Connector	1
29	P10106	Tee, Pipe	2
30	P18935	90° Elbow	4
31	P18936	Connector	1
32	P18937	Connector, O-Ring	2
33	P18938	Connector	1
34	P20399	Permatex Silicone Sealer	A/R
35	P19412	Swivel Tee	2
36	P18941	90° Elbow	4
37	P18942	Tee, Bulkhead	4
38	P18943	45° Elbow	4
39	P12971	O-Ring	1
40	P17553	Clamp	6
41	P17987	Ty-Rap, 19" Lg	4
42	P17989	Ty-Rap, 7-5/16" Lg	1
43	Com'l	Lock Washer, Shakeproof	1
44	Com'l	Nut, 3/8 NC	1
45	Com'l	Bolt, Hx, 5/16-18 x 2-1/4	2
46	16693A	Rubber Mount	1
47	P10180	Reducer Bushing	2
48	Com'l	Lock Washer, 5/16	2
49	P19292	Load Sensing Valve	1
50	P19054	Adapter	1
51	P17179	Nipple, Close	2
52	P19055	90° Elbow	1
53	P17846	Safety Valve	1

ITEM	PART	DESCRIPTION	QTY
54	P10610	Nipple	1
55	P19170	Frame Tilt Cylinder Assembly	1
56	P19056	90° Elbow, O-Ring	1
57	P10120	Reducer, Bushing	1
58	N10695	Nipple, Long	1
59	P19171	Transfer Cylinder Assembly	1
60	P17846	Safety Valve	1
61	P20412	Hose, 3/4" x 18"	1
62	P10555	Plug, Fuel	1
63	P10216	Plug, Hyd. Oil	1
64	15405D	Tank, Combination Fuel & Hyd Oil	1
65	P10129	Elbow, 90°, Pipe	1
66	N10090	Half Nipple	2
67	P10270	Hose Clamp	2
68	P17840	Hose, Green Stripe	7"
69	P10219	45° Elbow, Street	1
70	P10144	Reducer Bushing	1
71	P13587	Filter Base	1
72	P13586	Filter Element	1
73	Com'l	Bolt, Hx, 5/16-18 x 1"	2
74	Com'l	Lockwasher, 5/16	2
75	P10231	90° Elbow, Street	1
76	N10696	Nipple	1
77	P10553	Hose Clamp	2
78	P19075	Hose, Green Stripe	11"
79	P18819	Breather	1
80	P18823	Cap & Dipstick	1
81	16289C	Manifold, Hydraulic Tank Cover	1
82	Com'l	Nut, Hx, 5/16-18	15
83	Com'l	Lockwasher, 5/16	15
84	P18824	Seal	1
85	P18822	Filter, Suction Magnetic	1
86	P10553	Clamp, Hose	2
87	P16509	Hose, Green Stripe	7"
88	16290B	Elbow, Pump Inlet	1
89	P17672	Flange	2
90	Com'l	Bolt, Hx, 1/2-13 x 1-1/2	4
91	Com'l	Lockwasher, 1/2	4
92	P18192	Pump	1
93	Com'l	Bolt, Hx, 1/2-13 x 1-1/4"	2
94	Com'l	Lockwasher, 1/2	2
95	REF	Cylinder, Steering	4
96	P18911	Hose, 1/2 x 26"	1
97	P19495	Hose, 1/4 x 18"	1
98	P10757	Nipple	1
99	P10201	90° Elbow, Street	1
100	P15093	45° Elbow, Street	1
101	P19246	Connector	1
102	P13588	Gauge	1
103	16271A	Bracket, Hose Support Rear Axle	1
104	Com'l	Bolt, Hx, 3/8-18 x 1/2	1
105	Com'l	Nut, Hx, 5/16-18	1
106	P16590	O-Ring	1

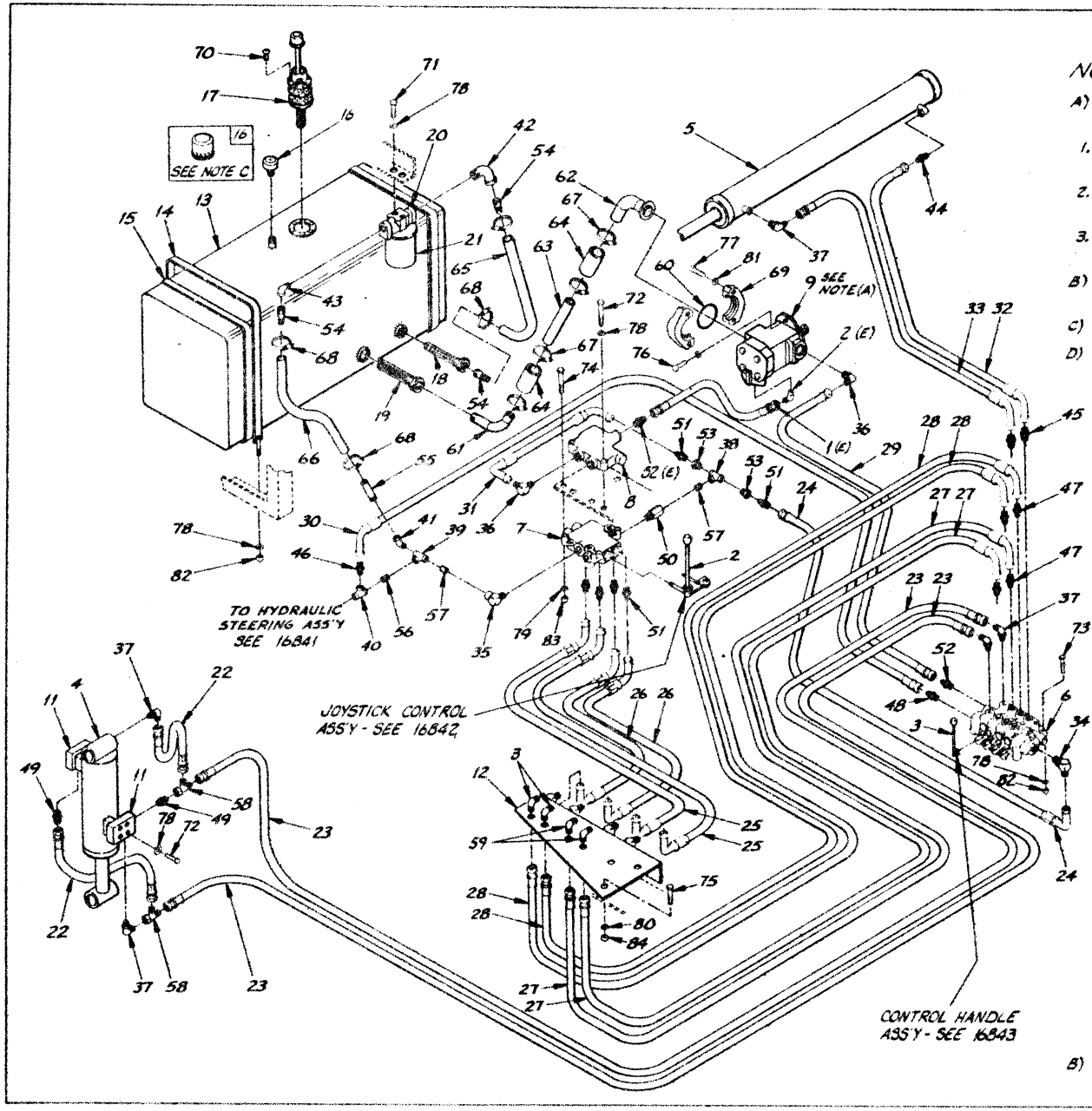

NOTES:

A) USE ONE OF THE FOLLOWING HYD. PUMPS FOR ITEM #9.

1. P18128 - VICKERS VANE PUMP MODEL NO. V 2020
2. P21423 - VICKERS GEAR PUMP MODEL NO. G 2020
3. P20373 - WEBSTER PUMP MODEL NO. WE 45207

B) FOR WEBSTER PUMP APPLICATION USE P10788 & DELETE ITEMS 60 & 69.

C) FOR S/N 101-755 USE P18819.

D) FOR MACHINES w/ 3/8" DIA. HYD. HOSE, USE P18851.

E) FOR VICKERS GEAR PUMPS, USE AS FOLLOWS
ITEM #1 USE P19764 (.75 x 27")
ITEM #2 USE P17802 (90° ELBOW)
ITEM #52 USE P17802 (90° ELBOW)

ITEM	PART NO.	DESCRIPTION	REQ.
84	COM'L	NUT, HX. 7/16-14 NC	3
83	COM'L	NUT, HX. 3/8-16 NC	3
82	COM'L	NUT, HX. 5/16-18 NC	7
81	COM'L	LOCKWASHER, 1/2"	6
80	COM'L	LOCKWASHER, 7/16"	3
79	COM'L	LOCKWASHER, 5/8"	3
78	COM'L	LOCKWASHER, 5/16"	17
77	COM'L	BOLT, HX. HD. 1/2-13 NC x 1 1/2	4
76	COM'L	BOLT, HX. HD. 1/2-13 NC x 1 1/4	2
75	COM'L	BOLT, HX. HD. 7/16-14 NC x 1	3
74	COM'L	BOLT, HX. HD. 3/8-16 NC x 2 1/2	3
73	COM'L	BOLT, HX. HD. 5/16-18 NC x 2 3/4	3
72	COM'L	BOLT, HX. HD. 5/16-18 NC x 2 1/4	10
71	COM'L	BOLT, HX. HD. 5/16-18 NC x 1	2
70	COM'L	SCREW, PAN HD. 10-32 x 1	6
69	P17672	HALF FLANGE	2
68	P14043	HOSE CLAMP	4
67	P10553	HOSE CLAMP	6
66	P20476	HOSE, RETURN	AR
65	P17840	HOSE, RETURN	AR
64	P16609	HOSE, GREENSTRIPE	AR
63	183475	TUBE, PUMP INTAKE	1
62	167508	UPPER ELBOW WELD'T	1
61	167478	LOWER ELBOW WELD'T	1
60	P12971	O-RING	1
59	P18931	BULKHEAD ELBOW 90	2
58	P19412	SWIVEL TEE	2
57	P10900	NIPPLE, CLOSE	2
56	P10610	NIPPLE, LONG	1
55	P10857	NIPPLE, LONG	1
54	P18142	NIPPLE, SWAGED HOSE	3
53	P10180	REDUCER BUSHING	2
52	P17805	ADAPTOR, O-RING	2
51	P17804	ADAPTOR, MALE	6
50	P19054	ADAPTOR, O-RING	1
49	P19478	CONNECTOR, O-RING	2
48	P18997	CONNECTOR, O-RING	1
47	P18944	CONNECTOR, O-RING	4
46	P18933	CONNECTOR	1
45	P18937	CONNECTOR, O-RING	2
44	P18936	CONNECTOR, O-RING	1
43	P10162	STREET ELBOW 90°	1
42	P10138	STREET ELBOW 45°	1
41	P10219	STREET ELBOW 45°	1
40	P10106	TEE, FEMALE PIPE	1
39	P19052	TEE, FEMALE PIPE	1
38	P19051	TEE, FEMALE PIPE	1
37	P18935	ELBOW 90°, O-RING	5
36	P17802	ELBOW 90°, O-RING	2
35	P19056	ELBOW 90°, O-RING	1
34	P19055	ELBOW 90°, O-RING	1
33	P18896	HYD. HOSE .38 x 56	1
32	P18894	HYD. HOSE .38 x 118	1
31	P19424	HYD. HOSE .75 x 12	1
30	P18911	HYD. HOSE .50 x 26	1
29	P18921	HYD. HOSE .75 x 23	1
28	P21572	HYD. HOSE .50 x 73	2
27	P18883	HYD. HOSE .38 x 69	2
26	P18884	HYD. HOSE .75 x 40	2
25	P18885	HYD. HOSE .75 x 38	2
24	P18922	HYD. HOSE .75 x 24	1
23	P19049	HYD. HOSE .25 x 104	2
22	P19490	HYD. HOSE .25 x 24	2
21	P19801	FILTER, SPIN-ON	1
20	P19800	HYD. OIL FILTER BASE	1
19	P19878	STRAINER	1
18	P19877	DIFFUSER	1
17	P19876	FILTER-STRAINER ASS'Y	1
16	P21674	BREATHER	1
15	P20284	BELTING, CHEMPRENE	2
14	157818	STRAP WELDMENT	2
13	P20352	TANK, COMB. FUEL-HYD	1
12	159946	HOSE SUPPORT BRKT.	1
11	P17686	SAFTEY VALVE	2
10	P19921	GASKET, WEBSTER PUMP	REF
9	(A)	PUMP, (SEE NOTE)	1
8	P19292	VALVE, FLOW CONTROL	1
7	P18796	VALVE, 2 SPOOL	1
6	P18797	VALVE, 4 SPOOL	1
5	P19171	TRANSFER CYLINDER	1
4	P19170	FRAME TILT CYLINDER	1
3	P18930	90° ELBOW, BULKHEAD	1
2	P19147	45° ELBOW, O-RING	1
1	P19493	HYD. HOSE .75 x 18	1

ITEM | PART NO. | DESCRIPTION | REQ.

LULL Engineering Co., Inc. ST. PAUL, MINNESOTA 55121

DRAWN BY J DAUB

S/N 329, 338-990

DRAWING TITLE
LOWER HYDRAULICS ASSEMBLY
MODEL 844

REVISION D

DRAWING NO. 16309-3

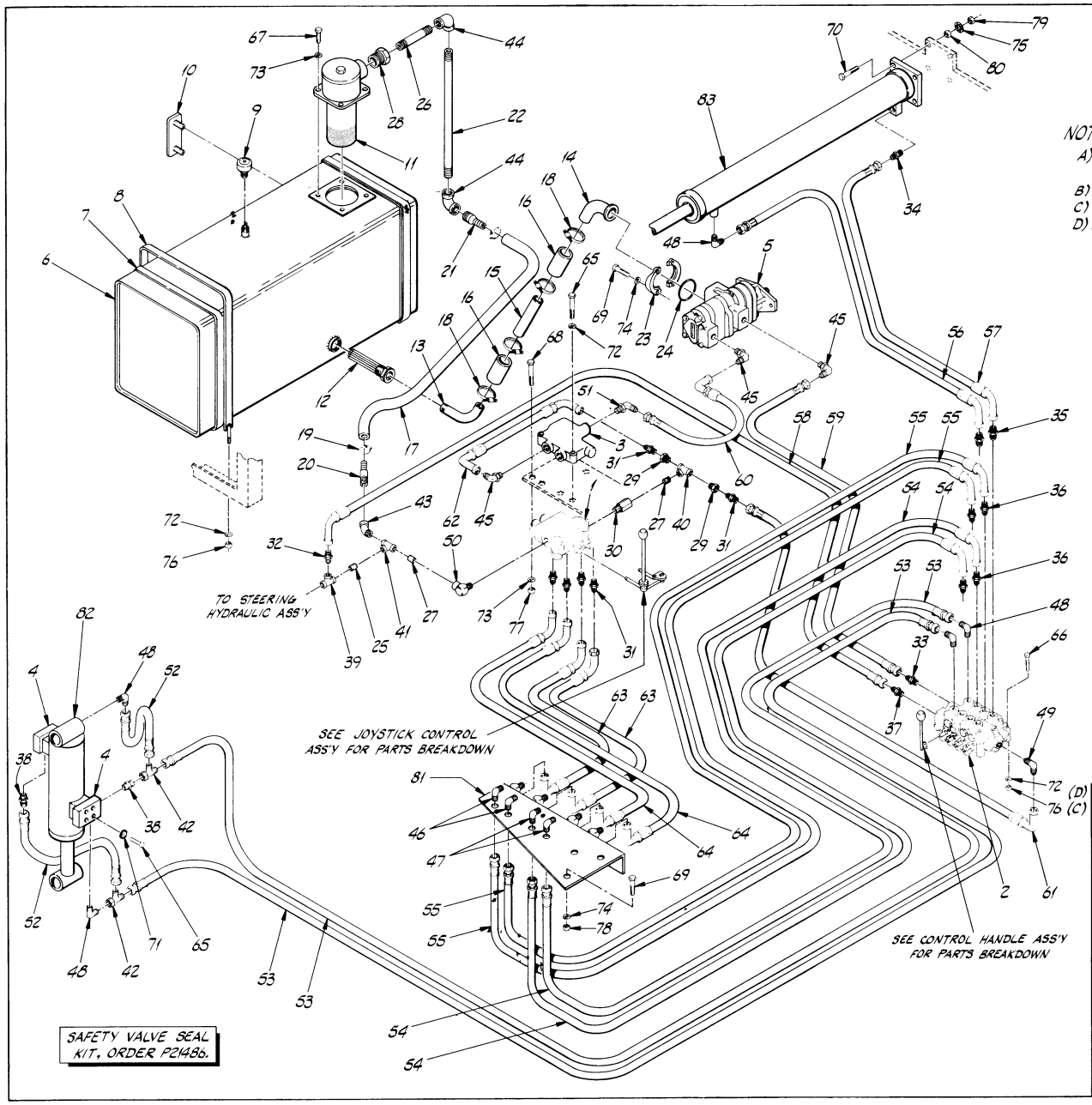

NOTES:

A) HYDRAULIC OIL FILTER ELEMENT, ORDER P24315.
B) FOR S/N 991-1081, USE P17802.
C) FOR S/N 991-1081, USE P19170.
D) FOR S/N 991-1081, USE P19171.

ITEM	PART NO.	DESCRIPTION	REQ.
83	P24742	TRANSFER CYLINDER (A)	1
82	P24741	FRAME TILT CYLINDER	1
81	15994C	HOSE JUCTION MOUNT	1
80	COM'L	NUT, HX. 1/2"-20	4
79	COM'L	JAM NUT, HX. 1/2"-20	4
78	COM'L	NUT, HX. 1/2"-13	3
77	COM'L	NUT, HX. 3/8"-16	3
76	COM'L	NUT, HX. 5/16"-18	7
75	COM'L	STARWASHER, 1/2"	4
74	COM'L	LOCKWASHER, 1/2"	7
73	COM'L	LOCKWASHER, 3/8"	7
72	COM'L	LOCKWASHER, 5/16"	9
71	COM'L	STARWASHER, 5/16"	8
70	COM'L	BOLT, HX. 1/2"-20 × 2 1/2"	4
69	COM'L	BOLT, HX. 1/2"-13 × 1 1/2"	7
68	COM'L	BOLT, HX. 3/8"-16 × 2 1/2"	3
67	COM'L	BOLT, HX. 3/8"-16 × 1"	4
66	COM'L	BOLT, HX. 5/16"-18 × 2 3/4"	3
65	COM'L	BOLT, HX. 5/16"-18 × 2 1/4"	10
64	P18885	HYD. HOSE .75 × 38"	2
63	P18884	HYD. HOSE .75 × 40"	2
62	P19494	HYD. HOSE .75" × 12"	1
61	P18922	HYD. HOSE .75" × 24"	1
60	P19764	HYD. HOSE .75" × 27"	1
59	P18921	HYD. HOSE .75" × 23"	1
58	P18911	HYD. HOSE .50" × 26"	1
57	P18894	HYD. HOSE .38" × 118"	1
56	P18896	HYD. HOSE .38" × 56"	1
55	P21572	HYD. HOSE .50" × 73"	2
54	P18855	HYD. HOSE .38" × 69"	2
53	P19049	HYD. HOSE .25" × 104"	2
52	P19490	HYD. HOSE .25" × 24"	2
51	17960A	90° ELBOW, SPECIAL (B)	1
50	P19056	90° ELBOW, O-RING	1
49	P19055	90° ELBOW, O-RING	1
48	P18935	90° ELBOW, O-RING	5
47	P18931	90° ELBOW, BULKHEAD	2
46	P18930	90° ELBOW, BULKHEAD	2
45	P17802	90° ELBOW, O-RING	
44	P10230	90° ELBOW, PIPE	2
43	P10219	45° ELBOW, STREET	1
42	P19412	TEE, SWIVEL	2
41	P19052	TEE, PIPE-REDUCER	1
40	P10173	TEE, PIPE	1
39	P10106	TEE, PIPE	1
38	P19478	CONNECTOR, O-RING	2
37	P18997	CONNECTOR, O-RING	1
36	P18944	CONNECTOR, O-RING	4
35	P18937	CONNECTOR, O-RING (LONG)	2
34	P18936	CONNECTOR, O-RING	1
33	P17805	CONNECTOR, O-RING	1
32	P18933	CONNECTOR, MALE	1
31	P17804	CONNECTOR, MALE	6
30	P19054	ADAPTOR, O-RING	1
29	P10180	REDUCER BUSHING	2
28	P10132	REDUCER BUSHING	1
27	P10900	NIPPLE, CLOSE	2
26	P10846	NIPPLE	1
25	P10610	NIPPLE	1
24	P12971	O-RING	1
23	P17672	HALF FLANGE	2
22	18022A	RETURN PIPE	1
21	P18142	SWAGED HOSE NIPPLE	1
20	P24780	SWAGED HOSE NIPPLE	1
19	P14043	HOSE CLAMP	2
18	P10553	HOSE CLAMP	4
17	P17840	-36" HOSE, RETURN	1
16	P16609	-4" HOSE, INTAKE	2
15	18347-5	TUBE, INTAKE	1
14	16750B	UPPER INTAKE ELBOW	1
13	16747B	LOWER INTAKE ELBOW	1
12	P19878	STRAINER	1
11	P24340	FILTER BASE, HYD. OIL	1
10	P21482	SIGHT GAUGE w/H.W.	1
9	P21674	BREATHER, HYD. OIL	1
8	15781B	STRAP, TANK HOLD DOWN	2
7	P20284	BELTING, CHEMPRENE	2
6	P20403	TANK, FUEL/HYDRAULIC	1
	P18128	PUMP, VANE (V2020)	-
5	P21423	PUMP, GEAR (G2020)	1
4	P17686	SAFTEY VALVE	2
3	P19292	VALVE, FLOW CONTROL	1
2	P18197	VALVE, 4 SPOOL	1
1	P18196	VALVE, 2 SPOOL	1

LULL Engineering Co., Inc.
ST. PAUL, MINNESOTA 55121

DRAWN BY: Jeff Kraus
S/N 991 THRU

DRAWING TITLE: LOWER HYDRAULICS ASSEMBLY MODEL 844

SCALE: D

DRAWING NO. 16809-4

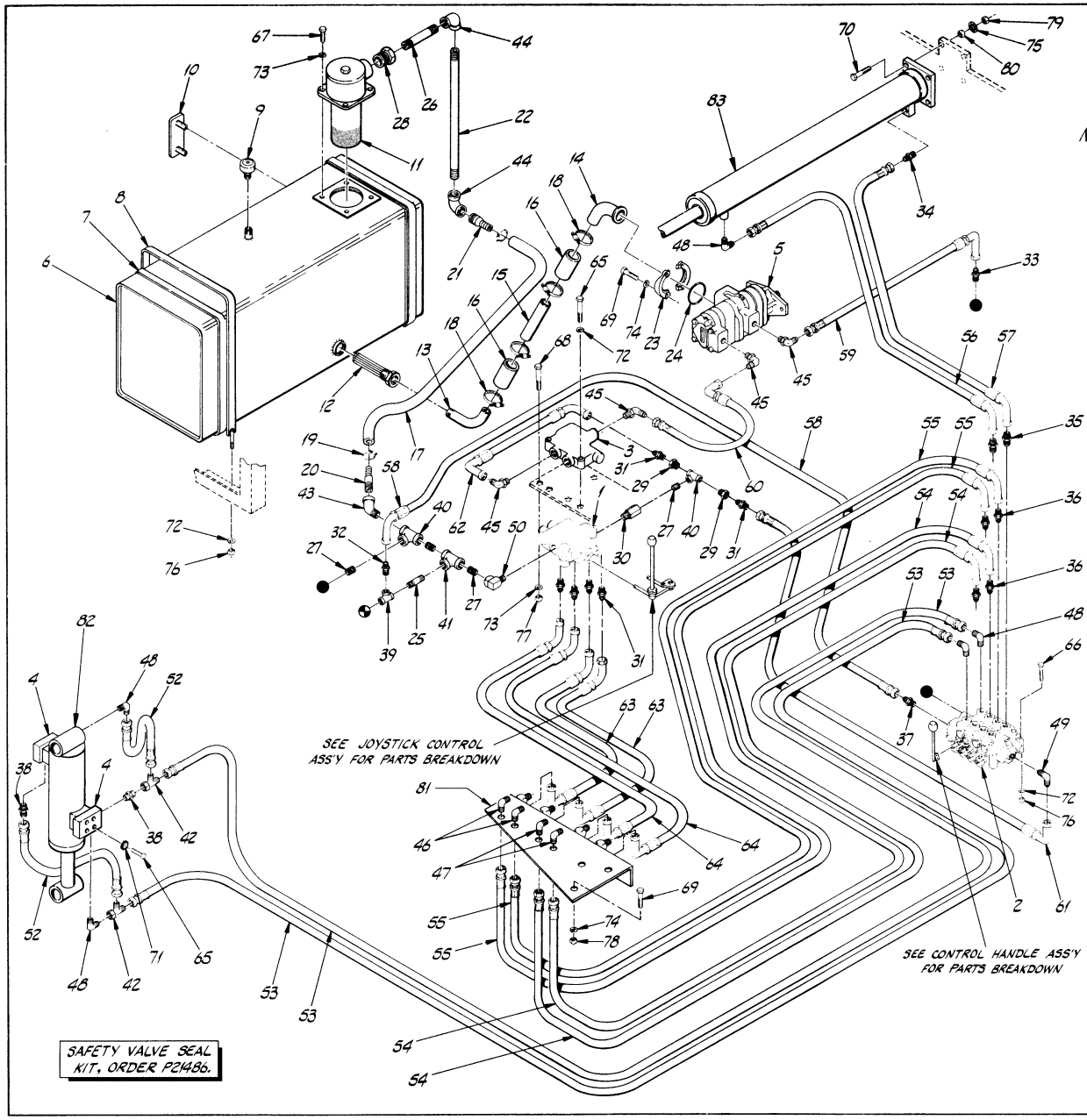

NOTES:

A) HYDRAULIC OIL FILTER ELEMENT, ORDER P24315.

B) INCLUDES FUEL SENDER.

◐ : SEE STEERING HYDRAULIC ASS'Y.

● : SEE FOOT & HAND BRAKE ASS'Y.

ITEM	PART NO.	DESCRIPTION	REQ.	
83	P24742	TRANSFER CYLINDER	1	
82	P24741	FRAME TILT CYLINDER	1	
81	15994C	HOSE JUCTION MOUNT	1	
80	P01533	NUT, HX. 1/2"-20	4	
79	P01583	JAM NUT. HX. 1/2"-20	4	
78	P01510	NUT, HX. 1/2"-13	3	
77	P01508	NUT, HX. 3/8"-16	3	
76	P01507	NUT, HX. 5/16"-18	7	
75	P01361	STARWASHER, 1/2"	4	
74	P01312	LOCKWASHER, 1/2"	7	
73	P01310	LOCKWASHER, 3/8"	7	
72	P01309	LOCKWASHER, 5/16"	9	
71	P01358	STARWASHER, 5/16"	8	
70	P00458	BOLT, HX. 1/2"-20 × 2 1/2"	4	
69	P00404	BOLT, HX. 1/2"-13 × 1 1/2"	7	
68	P00210	BOLT, HX. 3/8"-16 × 2 1/2"	3	
67	P00204	BOLT, HX. 3/8"-16 × 1"	4	
66	P00111	BOLT, HX. 5/16"-18 × 2 3/4"	3	
65	P00109	BOLT, HX. 5/16"-18 × 2 1/4"	10	
64	P18885	HYD. HOSE .75" × 38"	2	
63	P18884	HYD. HOSE .75" × 40"	2	
62	P19494	HYD. HOSE .75" × 12"	1	
61	P18922	HYD. HOSE .75" × 24"	1	
60	P19764	HYD. HOSE .75" × 27"	1	
59	P26613	HYD. HOSE .75" × 21"	1	
58	P18911	HYD. HOSE .50" × 26"	1	
57	P18894	HYD. HOSE .38" × 118"	1	
56	P18896	HYD. HOSE .38" × 56"	1	
55	P21572	HYD. HOSE .50" × 73"	2	
54	P18855	HYD. HOSE .38" × 69"	2	
53	P19049	HYD. HOSE .25" × 104"	2	
52	P19490	HYD. HOSE .25" × 24"	2	
51				
50	P19056	90° ELBOW, O-RING	1	
49	P19055	90° ELBOW, O-RING	1	
48	P18935	90° ELBOW, O-RING	5	
47	P18931	90° ELBOW, BULKHEAD	2	
46	P18930	90° ELBOW, BULKHEAD	2	
45	P17802	90° ELBOW, O-RING	3	
44	P10230	90° ELBOW, PIPE	2	
43	P10219	45° ELBOW, STREET	1	
42	P19412	TEE, SWIVEL	2	
41	P19052	TEE, PIPE-REDUCER	1	
40	P10173	TEE, PIPE	2	
39	P10106	TEE, PIPE	1	
38	P19478	CONNECTOR, O-RING	2	
37	P18997	CONNECTOR, O-RING	1	
36	P18944	CONNECTOR, O-RING	4	
35	P18937	CONNECTOR, O-RING (LONG)	2	
34	P18936	CONNECTOR, O-RING	1	
33	P17805	CONNECTOR, O-RING	2	
32	P18933	CONNECTOR, MALE	1	
31	P17804	CONNECTOR, MALE	6	
30	P19054	ADAPTOR, O-RING	1	
29	P10180	REDUCER BUSHING	2	
28	P10132	REDUCER BUSHING	1	
27	P10900	NIPPLE, CLOSE	4	
26	P10846	NIPPLE	1	
25	P10610	NIPPLE	1	
24	P12971	O-RING	1	
23	P17672	HALF FLANGE	2	
22	18022A	RETURN PIPE	1	
21	P18142	SWAGED HOSE NIPPLE	1	
20	P24780	SWAGED HOSE NIPPLE	1	
19	P14043	HOSE CLAMP	2	
18	P10553	HOSE CLAMP	4	
17	N11591	-36" HOSE, RETURN	1	
16	N11553	-4" HOSE, INTAKE	2	
15	18347-5	TUBE, INTAKE	1	
14	16750B	UPPER INTAKE ELBOW	1	
13	16747B	LOWER INTAKE ELBOW	1	
12	P19878	STRAINER	1	
11	P24340	FILTER BASE, HYD. OIL	1	(A)
10	P21482	SIGHT GAUGE W/H.W.	1	
9	P21674	BREATHER, HYD. OIL	1	
8	15781B	STRAP, TANK HOLD DOWN	2	
7	P20284	BELTING, CHEMPRENE	2	
6	P20403	TANK, FUEL/HYDRAULIC	1	(B)
	P18128	PUMP, VANE (V2020)	-	
5	P21423	PUMP, GEAR (G2020)	1	
4	P17686	SAFTEY VALVE	2	
3	P19292	VALVE, FLOW CONTROL	1	
2	P18197	VALVE, 4 SPOOL	1	
1	P18196	VALVE, 2 SPOOL	1	

LULL Engineering Co., Inc. — ST. PAUL, MINNESOTA 55121

DRAWN BY: Jeff Paul — S/N 1722, 1724 THRU

DRAWING TITLE: LOWER HYDRAULICS ASSEMBLY MODEL 844

SCALE: D

DRAWING NO. 16809-5

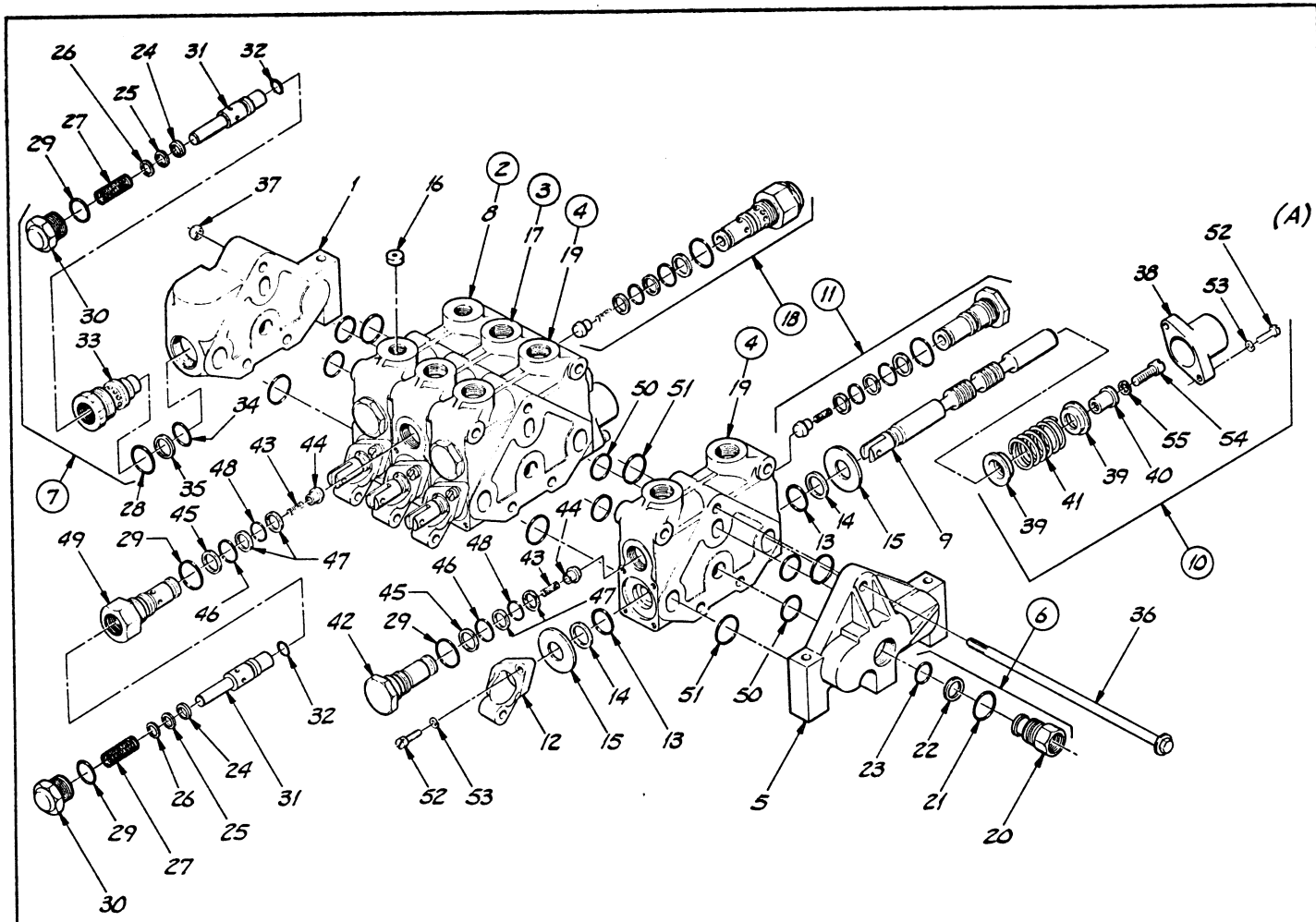

ITEM	PART NO.	DESCRIPTION	REQ.
44	P20334	POPPET	8
43	P20333	SPRING, LOAD CHECK	8
42	P20332	PLUG, LOAD CHECK	6
41	P20331	SPRING, POSITIONER	4
40	P20330	SEAT, CAPSCREW	4
39	P20329	COLLAR, SPRING	8
38	P20328	BONNET, POSITIONER	4
37	P20327	LOCKNUT, STUDS	3
36	P20326	STUD, SECTIONS	3
35	P20325	BACK-UP RING	1
34	P20324	SEAL, O-RING	1
33	P20323	BODY, MAIN RELIEF	1
32	P20322	SEAL, POPPET	3
31	P20321	POPPET (SEAL INCL.)	3
30	P20320	CAP, RELIEF	3
29	P20319	SEAL, O-RING	10
28	P20318	SEAL, O-RING	1
27	P20317	SPRING, RELIEF	3
26	P20316	SHIM, .50"x.0097"	A/R
25	P20315	SHIM, .50"x.0209"	A/R
24	P20314	SHIM, .50"x.0418"	A/R
23	P20313	SEAL, O-RING	1
22	P20312	BACK-UP RING	1
21	P20311	SEAL, O-RING	1
20	P20310	SLEEVE, POWER BEYOND	1
19	P20309	HOUSING, SAE #8 PORT	2
18	P20308	RELIEF ASSEMBLY	2
17	P20307	HOUSING, TANDEM	1
16	P20306	ORIFICE PLATE	2
15	P20305	SEAL, RETAINER PLATE	8
14	P20304	BACK-UP RING	8
13	P20303	SEAL, O-RING	8
12	P20302	LINK, HANDLE MOUNT	4
11	P20301	LOAD CHECK ASS'Y	6
10	P20300	POSITIONER ASS'Y	4
9	P20299	SPOOL	4
8	P20298	HOUSING, SAE #6 PORT	1
7	P20297	RELIEF ASS'Y, MAIN	1
6	P20296	POWER BEYOND ASS'Y	1
5	P20295	COVER, SECTION	1
4	P20294	SECTION ASS'Y, 4 WAY	2
3	P20293	SECTION ASS'Y, TANDEM	1
2	P20292	SECTION ASS'Y, 4 WAY	1
1	P20291	COVER, SECTION	1

55	COM'L	LOCKWASHER, 5/16"	4
54	COM'L	CAPSCREW, 5/16"-18 x 3/4"	4
53	COM'L	LOCKWASHER, 1/4"	16
52	COM'L	CAPSCREW, 1/4"-20 x 7/8"	16
51	P20341	SEAL, O-RING	10
50	P20340	SEAL, O-RING	10
49	P20339	BODY, RELIEF	2
48	P20338	SEAL, O-RING	8
47	P20337	BACK-UP RING	16
46	P20336	SEAL, O-RING	8
45	P20335	BACK-UP RING	8

SEAL KITS:
FOR VALVE SECTIONS (ITEM'S 2,3 & 4) USE P21758. 4 REQ. PER COMPLETE CONTROL VALVE. 5 REQ w/ 2ND AUX. FOR RELIEF (ITEM 7) USE P21759.

NOTE:
A) STUD KIT FOR 5 SECTION VALVE (2ND AUXILIARY) USE P19739. KIT INCLUDES STUDS, NUTS & SEALS.

LULL d/b/a Engineering Co., Inc.
ST. PAUL, MINNESOTA 55121

DRAWN BY: Jeff Daub
S/N 101 THRU

DRAWING TITLE:
4 SPOOL CONTROL VALVE ASSEMBLY
MODEL 644 & 844

SCALE: C
DRAWING NO. P18197

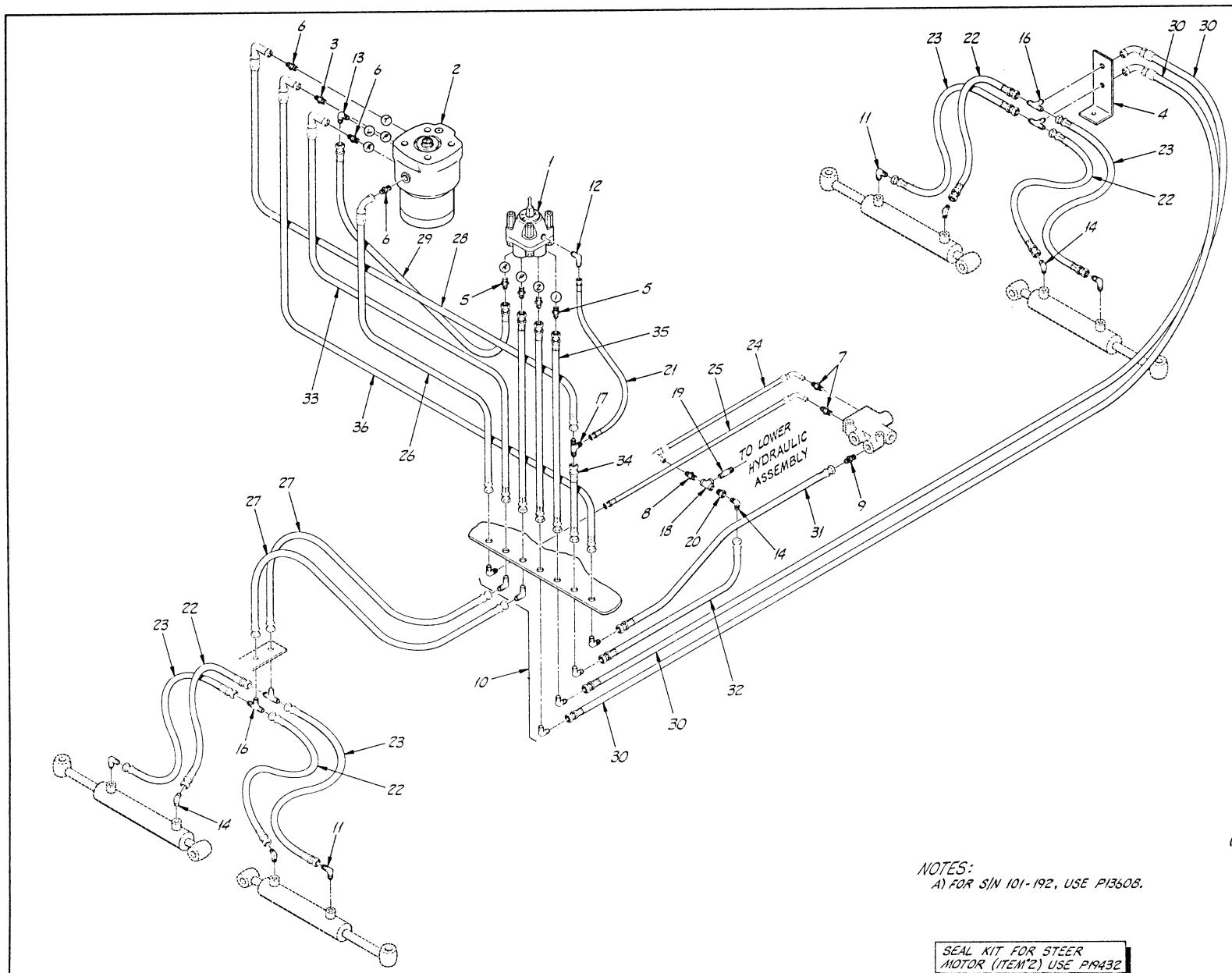

	ITEM	PART NO	DESCRIPTION		REQ.
	36	P19492	HYD HOSE	.38 × 28	1
	35	P19067	HYD HOSE	.38 × 28	3
	34	P19066	HYD HOSE	.38 × 15	1
	33	P19065	HYD HOSE	.38 × 27	1
	32	P19048	HYD HOSE	.38 × 34	1
	31	P18904	HYD HOSE	.38 × 35	1
	30	P18895	HYD HOSE	.38 × 117	2
	29	P18873	HYD HOSE	.38 × 15	1
	28	P18870	HYD HOSE	.38 × 15	1
	27	P18857	HYD HOSE	.38 × 43	2
	26	P20482	HYD HOSE	.25 × 30	1
	25	P19496	HYD HOSE	.25 × 36	1
	24	P19495	HYD HOSE	.25 × 13	1
	23	P18906	HYD HOSE	.25 × 24	4
	22	P18892	HYD HOSE	.25 × 17	4
	21	P18868	HYD HOSE	.25 × 15	1
	20	P10120	REDUCER		1
	19	P10610	NIPPLE		1
	18	P10106	TEE, PIPE		1
	17	P18995	TEE		1
	16	P18942	TEE, BULKHEAD		4
	15				
	14	P18943	45° ELBOW		5
	13	P18956	90° ELBOW, O-RING		1
	12	P18945	90° ELBOW		1
	11	P18941	90° ELBOW		4
	10	P18931	90° ELBOW, BULKHEAD		7
	9	P15406	CONNECTOR		1
	8	P19246	CONNECTOR		1
	7	P18960	CONNECTOR, O-RING		2
	6	P18944	CONNECTOR		3
	5	P18938	CONNECTOR		4
	4	16271A	MOUNT, BULKHEAD		1
	3	P19414	CHECK VALVE		1
(A)	2	P19293	STEER MOTOR		1
	1	P13714	STEERING SELECTOR		1

NOTES:
A) FOR S/N 101-192, USE P13608.

SEAL KIT FOR STEER MOTOR (ITEM 2) USE P19432

LULL Engineering Co., Inc. — ST. PAUL, MINNESOTA 55121

DRAWN BY: Jeff Lund

S/N 101 THRU

DRAWING TITLE: STEERING HYDRAULICS ASSEMBLY MODEL 844

SCALE: D

DRAWING NO.: 16841

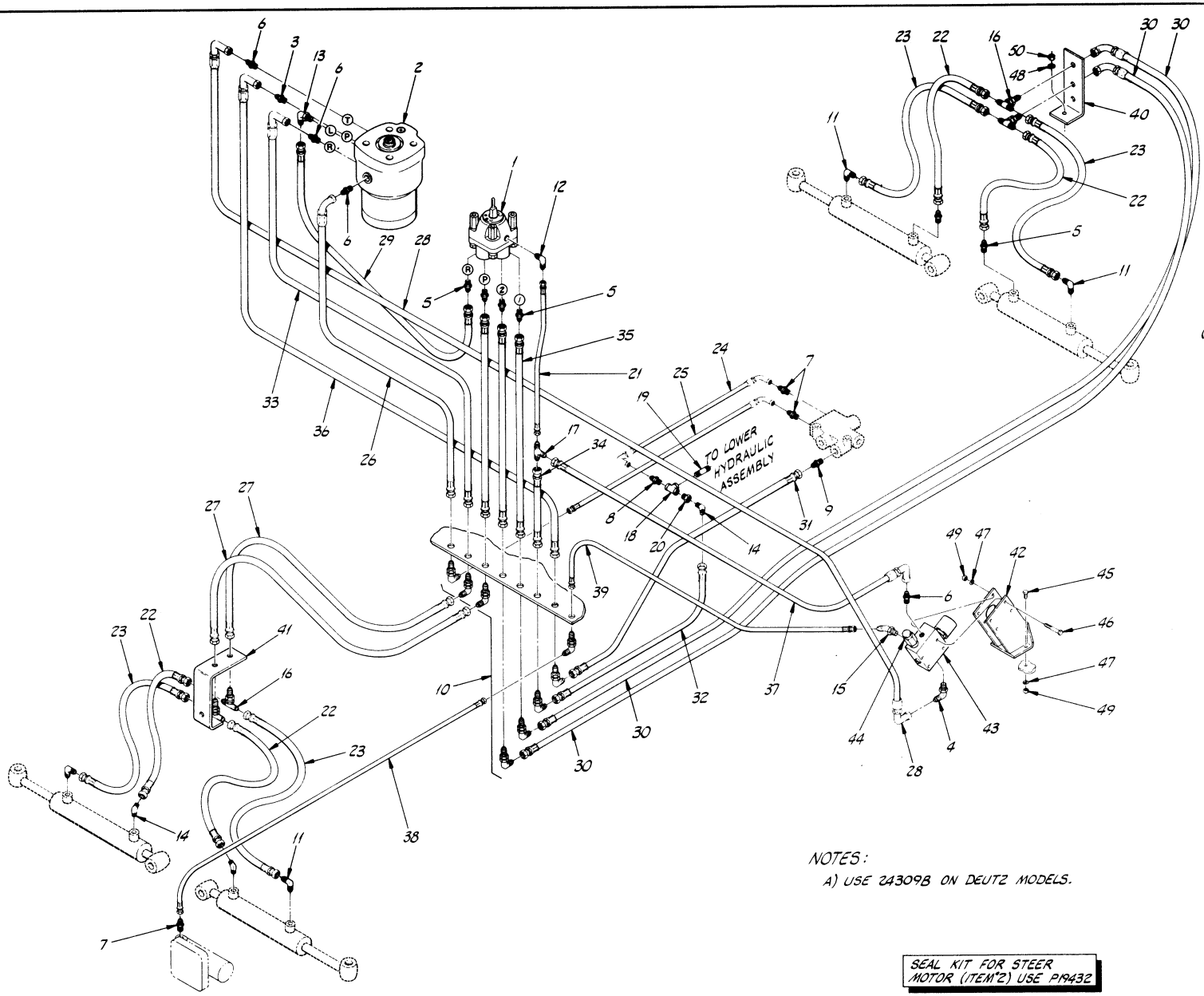

	ITEM	PART NO	DESCRIPTION	REQ.
	50	P01508	NUT, HX. 3/8"-16	2
	49	P01506	NUT, HX. 1/4"-20	6
	48	P01310	LOCKWASHER, 3/8"	2
	47	P01308	LOCKWASHER, 1/4"	6
	46	P00009	BOLT, HX. 1/4"-20 × 2"	4
	45	P00001	BOLT, HX. 1/4"-20 × 1/2"	2
	44	P25473	RELIEF VALVE	-
	43	P25455	VALVE, DIFF LOCK	1
	42	22013C	MOUNT, DIFF LOCK VALVE	1
	41	24186A	MOUNT, BULKHEAD-FRONT	1
	40	21508A	MOUNT, BULKHEAD-REAR	1
(A)	39	P25852	HYD HOSE .25"×19"	1
	38	P26609	HYD HOSE .25"×85"	1
	37	P26614	HYD HOSE .38"×10"	1
	36	P19492	HYD HOSE .38"×28"	1
	35	P19067	HYD HOSE .38"×28"	3
	34	P19066	HYD HOSE .38"×15"	1
	33	P19065	HYD HOSE .38"×27"	1
	32	P19048	HYD HOSE .38"×34"	1
	31	P18904	HYD HOSE .38"×35"	1
	30	P18895	HYD HOSE .38"×117"	2
	29	P18873	HYD HOSE .38"×15"	1
	28	P26616	HYD HOSE .38"×35"	1
	27	P26610	HYD HOSE .38"×63"	2
	26	P20482	HYD HOSE .25"×30"	1
	25	P19496	HYD HOSE .25"×36"	1
	24	P18919	HYD HOSE .25"×17"	1
	23	P18869	HYD HOSE .25"×15"	4
	22	P18892	HYD HOSE .25"×17"	4
	21	P25851	HYD HOSE .25"×12"	1
	20	P10120	REDUCER	1
	19	P10610	NIPPLE	1
	18	P10106	TEE, PIPE	1
	17	P18995	TEE	1
	16	P18942	TEE, BULKHEAD	4
	15	P21619	45° ELBOW, O-RING	1
	14	P18943	45° ELBOW	3
	13	P18956	90° ELBOW, O-RING	1
	12	P18945	90° ELBOW	1
	11	P18941	90° ELBOW	4
	10	P18931	90° ELBOW, BULKHEAD	8
	9	P15406	CONNECTOR	1
	8	P19246	CONNECTOR	1
	7	P18960	CONNECTOR, O-RING	3
	6	P18944	CONNECTOR	4
	5	P18938	CONNECTOR	6
	4	P19724	90° ELBOW, O-RING	1
	3	P19414	CHECK VALVE	1
	2	P19293	STEER MOTOR	1
	1	P13714	STEERING SELECTOR	1

NOTES:

A) USE 24309B ON DEUTZ MODELS.

SEAL KIT FOR STEER MOTOR (ITEM #2) USE P19432

LULL Engineering Co., Inc.
ST. PAUL MINNESOTA 55121

DRAWN BY: Jeff Paul

S/N 1722, 1724 THRU

DRAWING TITLE: STEERING HYDRAULICS ASSEMBLY MODEL 844

SCALE: D

DRAWING NO. 16841-1

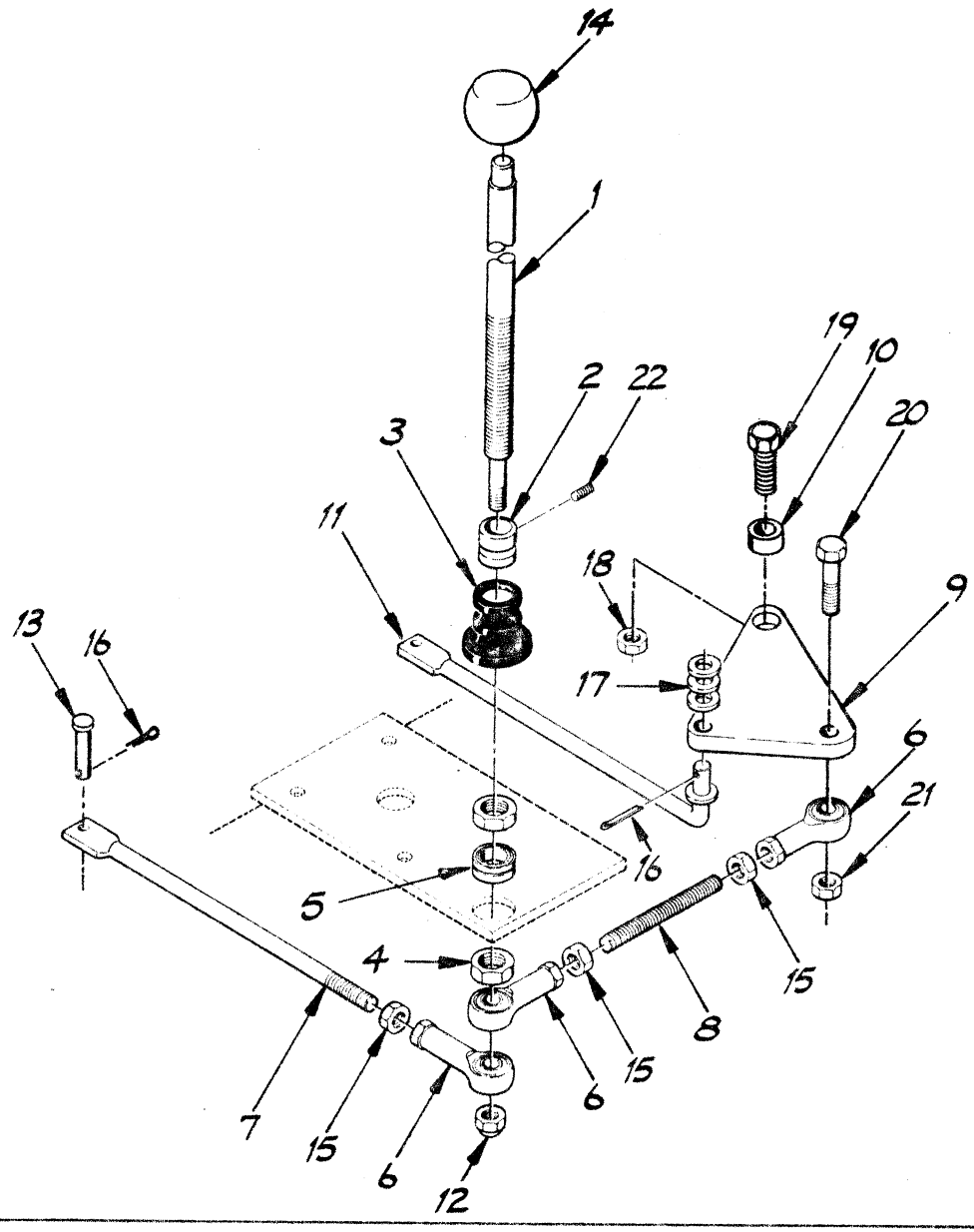

NOTE:
A) FOR S/N 101-115, USE P19086

	ITEM	PART NO.	DESCRIPTION	REQ
	22	COM'L	SOC. HD. SETSCREW 1/4-20NC × 1/8	1
	21	COM'L	NUT, HEX 3/8-16	2
	20	COM'L	BOLT, HEX, 3/8-16NC × 1 1/4"	1
	19	COM'L	BOLT, HX 1/2-13NC × 1 1/2"	1
	18	COM'L	NUT, HEX 1/2-13	2
	17	COM'L	FLATWASHER 3/8	5
	16	COM'L	COTTERPIN 1/8 DIA × 1"	3
	15	COM'L	NUT, HEX 3/8-24	3
A)	14	P18721	KNOB	1
	13	P18845	PIN	1
	12	COM'L	LOCKNUT, HX. 3/8-24	1
	11	16331A	LINK, BOOM CONTROL	1
	10	P19114	BUSHING, TOGGLE PLATE	1
	9	15583A	TOGGLE PLATE	1
	8	16330A	LINK, BOOM CONTROL	1
	7	16332A	LINK, BOOM CONTROL	1
	6	P18719	BALL BUSHING, ROD END	3
	5	P18718	BALL BUSHING, LEVER	1
	4	15825A	NUT	2
	3	P19087	BOOT, CONTROL LEVER	1
	2	15824A	COLLAR BOOT	1
	1	15823B	LEVER, BOOM CONTROL	1

LULL 10/64 Engineering Co., Inc.
ST. PAUL, MINNESOTA 55121

DRAWN BY Jeff Vaub

S/N 101 THRU

DRAWING TITLE
JOYSTICK CONTROL ASSEMBLY

MODEL 844

SCALE 3

DRAWING NO. 16842

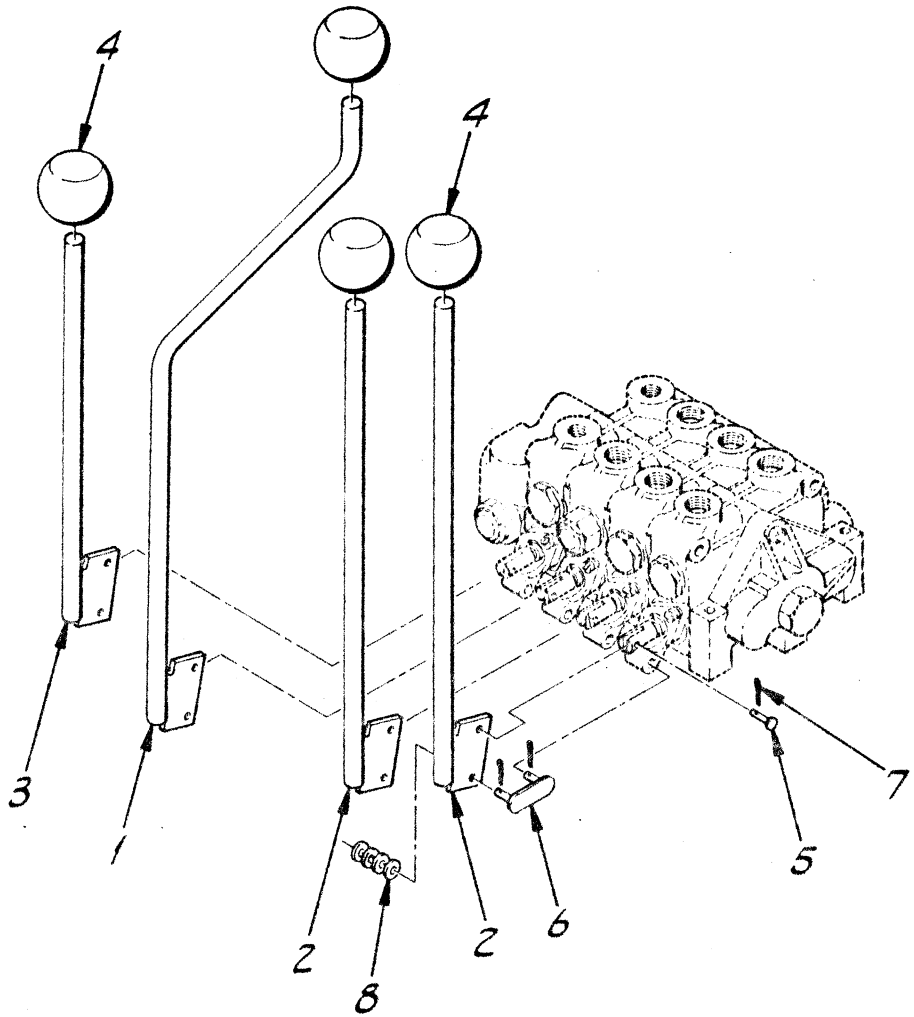

ITEM	PART NO.	DESCRIPTION	REQ.
8	COM'L	FLATWASHER 1/4"	A-R
7	COM'L	COTTER PIN 1/8" DIA × 3/4"	12
6	P19505	PIN LINK	4
5	P10512	CLEVIS PIN	4
4	P18721	KNOB	4
3	16124A	VALVE HANDLE, FRAME TILT	1
2	16295B	VALVE HANDLE, FORK TILT	2
1	16294A	VALVE HANDLE, AUX	1

LULL 10/84 Engineering Co., Inc.
ST. PAUL, MINNESOTA 55121

DRAWN BY

S/N 101 THRU

DRAWING TITLE
FOUR SPOOL CONTROL HANDLE ASSEMBLY
MODEL 844

SCALE B

DRAWING NO. 16843

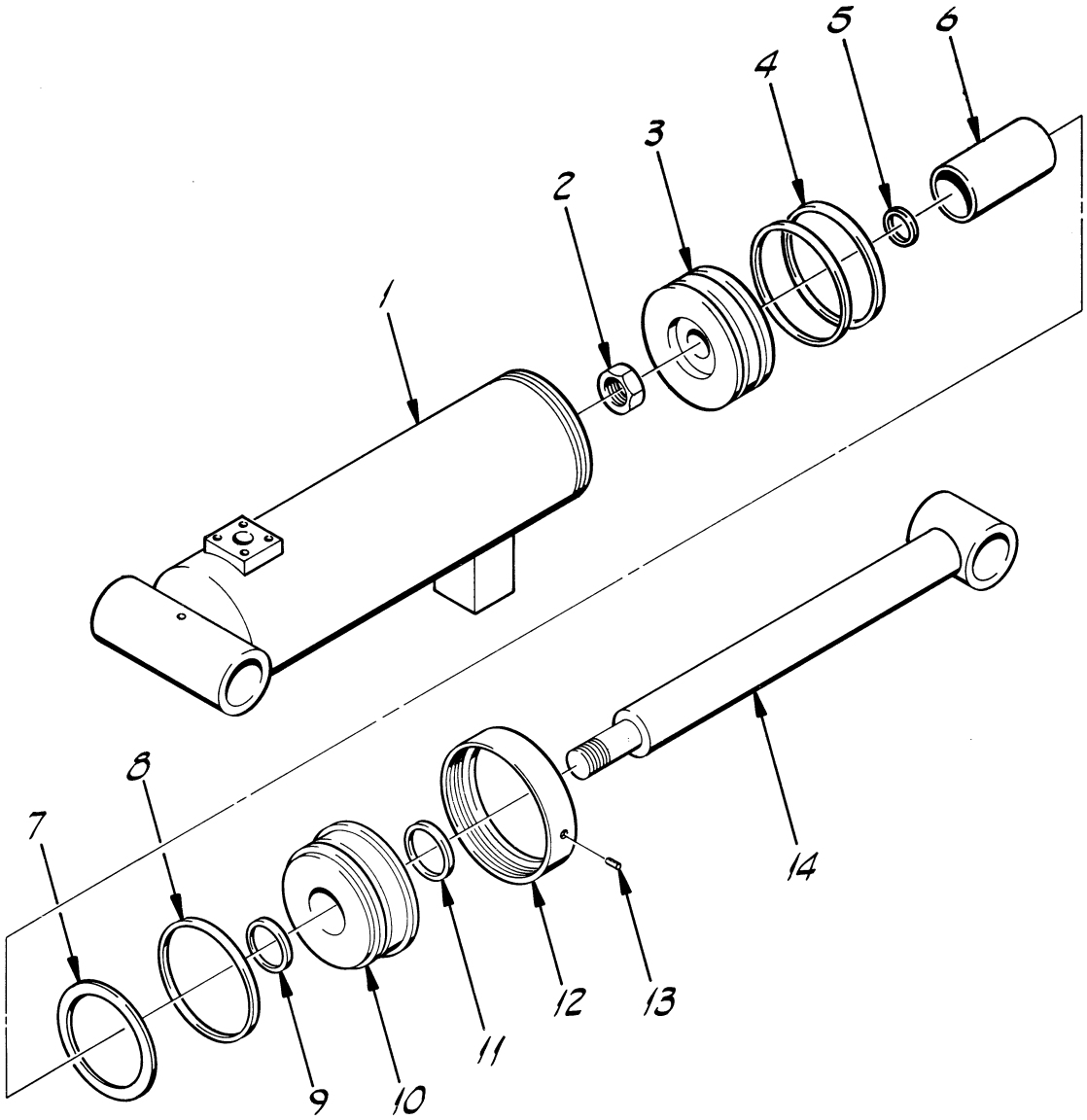

ITEM	PART NO.	DESCRIPTION	REQ.
REF	P19524	SEAL KIT	1
14	P19226	SHAFT WELDMENT	1
13	P19208	LOCKSCREW	1
12	P19227	RETAINING NUT	1
11	P19209	DUST SEAL	1
10	P19228	END GLAND	1
9	P19210	URETHANE U-CUP	1
8	P19229	O-RING	1
7	P20056	BACK-UP RING	1
6	P19230	STROKE BLOCK	1
5	P19231	O-RING	1
4	P19232	URETHANE U-CUP	2
3	P19233	PISTON	1
2	P19234	LOCKNUT	1
1	P19225	TUBE WELDMENT	1

LULL Engineering Co., Inc. 10/83

ST. PAUL, MINNESOTA 55121

DRAWN BY Jeff Naul

S/N 101 - 1040

DRAWING TITLE

FRAME TILT CYLINDER ASSEMBLY MODEL 844

P19170

SCALE B

DRAWING NO. 16844

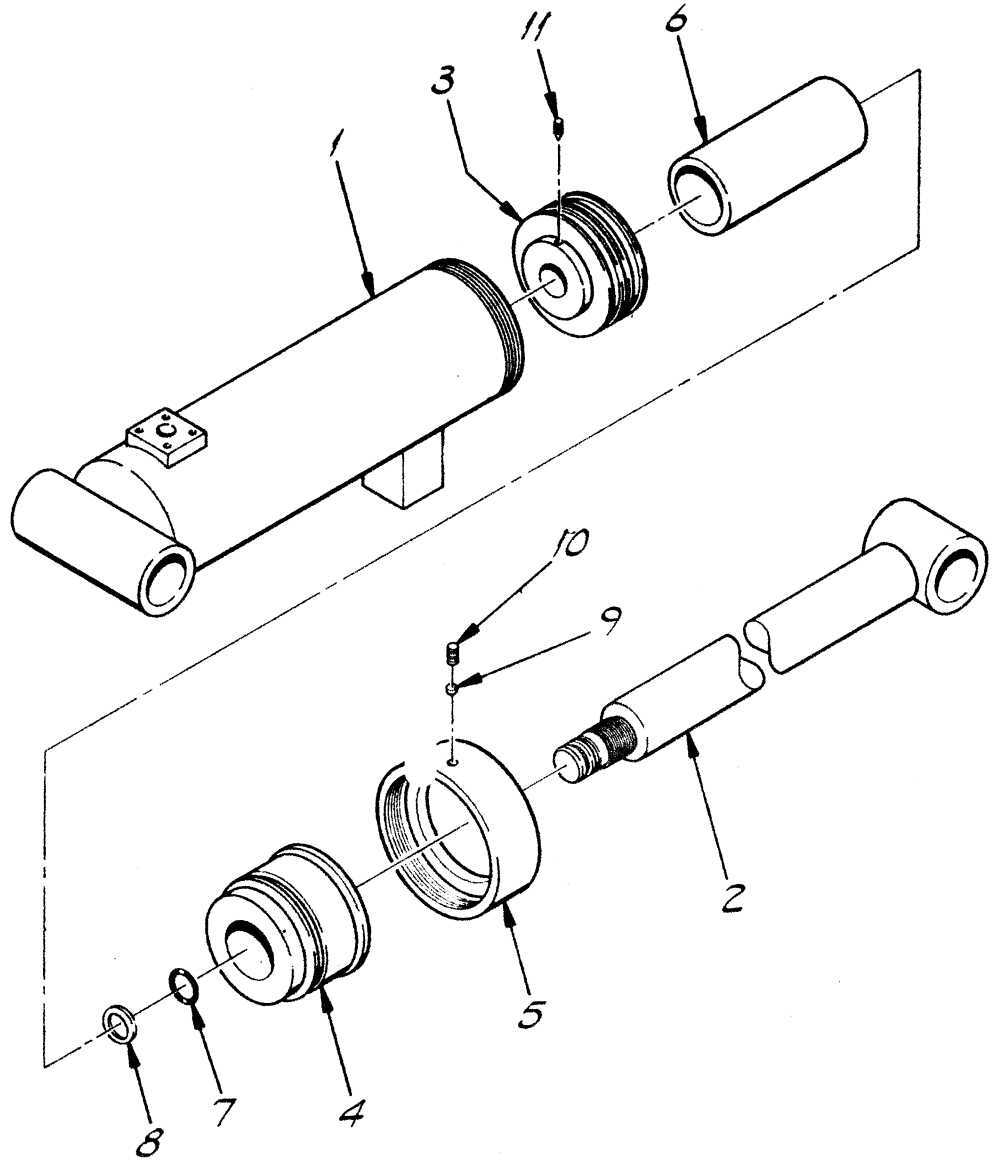

ITEM	PART NO.	DESCRIPTION	REQ.
REF	P24442	SEAL KIT	1
11	P24435	SET SCREW	1
10	P24434	SET SCREW	1
9	P24431	NYLON PLUG	1
8	P24425	BACK-UP RING	2
7	P24418	O-RING	1
6	P24916	STROKE LIMITER	1
5	P24403	ROD BEARING RETAINER	1
4	P24911	ROD BEARING	1
3	P24381	PISTON	1
2	P24904	ROD WELDMENT	1
1	P24894	BARREL WELDMENT	1

LULL 9/83 Engineering Co., Inc.
ST. PAUL, MINNESOTA 55121

DRAWN BY Jeff Paul

S/N 1041 THRU

DRAWING TITLE
FRAME TILT CYLINDER ASSEMBLY
MODEL 844

P24741

SCALE B

DRAWING NO. 16844-1

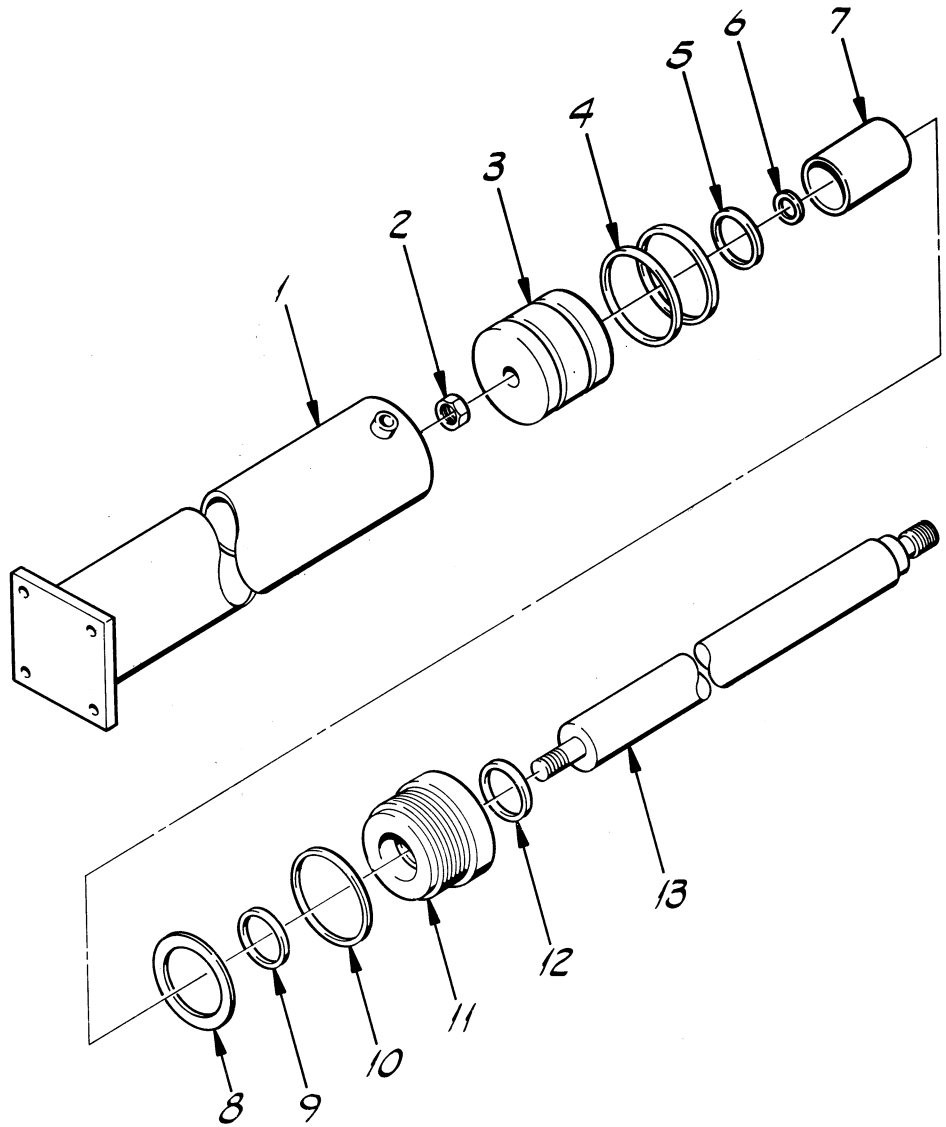

ITEM	PART NO.	DESCRIPTION	REQ.
REF	P19525	SEAL KIT	1
13	P19219	SHAFT	1
12	P19209	DUST SEAL	1
11	P19220	END GLAND	1
10	P19221	O-RING	1
9	P19210	URETHANE U-CUP	1
8	P20055	BACK-UP RING	1
7	P19222	STROKE BLOCK	1
6	P19214	O-RING	1
5	P20061	O-RING	1
4	P19223	URETHANE U-CUP	2
3	P19224	PISTON	1
2	P19217	LOCKNUT	1
1	P19218	TUBE WELDMENT	1

LULL 10/89 Engineering Co., Inc.
ST. PAUL, MINNESOTA 55121

DRAWN BY Jeff Daub

S/N 101 - 1040

DRAWING TITLE
TRANSFER CYLINDER ASSEMBLY MODEL 844

P19171

SCALE B

DRAWING NO. 16845

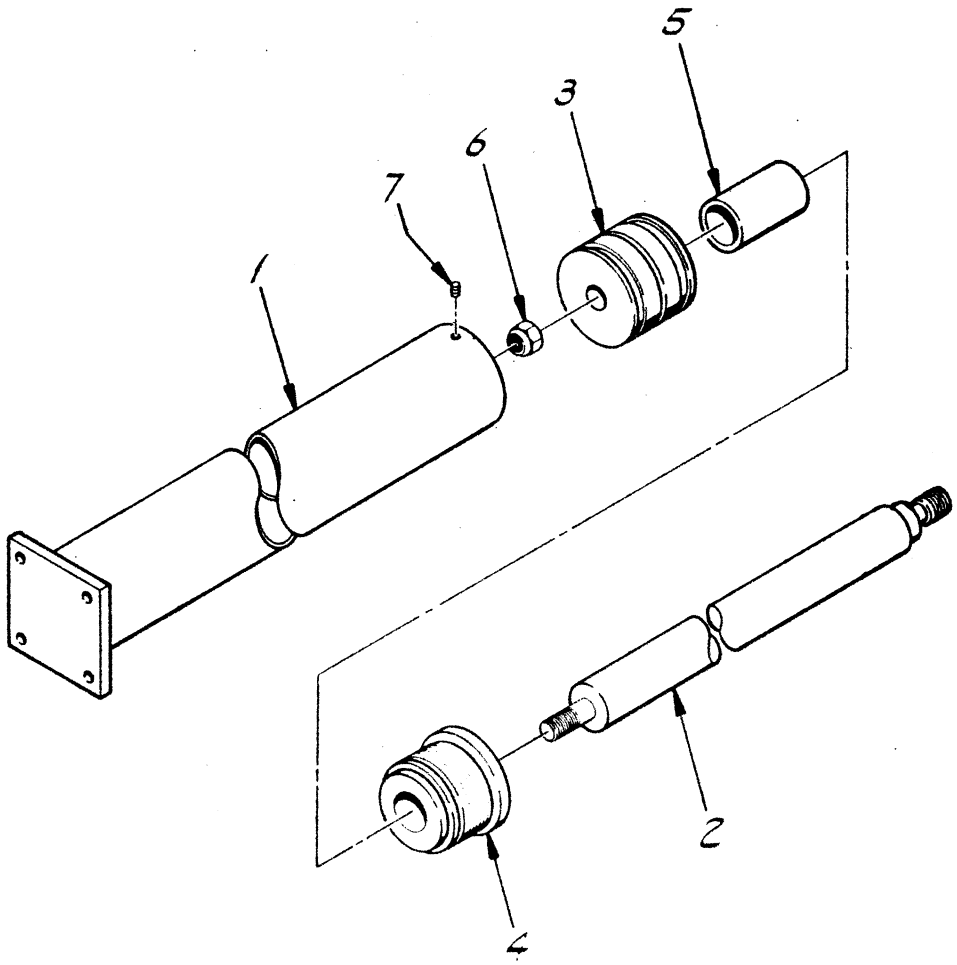

REF	P24441	SEAL KIT	1
7	P24433	SET SCREW	1
6	P24428	NUT	1
5	P24408	STROKE LIMITER	1
4	P24401	ROD BEARING	1
3	P24378	PISTON	1
2	P24902	ROD	1
1	P24892	BARREL WELDMENT	1
ITEM	PART NO	DESCRIPTION	REQ.

LULL 9/63 Engineering Co., Inc.
ST PAUL, MINNESOTA 55121

DRAWN BY Jeff Daub

S/N 1041 THRU

DRAWING TITLE
TRANSFER
CYLINDER ASSEMBLY
MODEL 844

P24742

SCALE B

16845-1

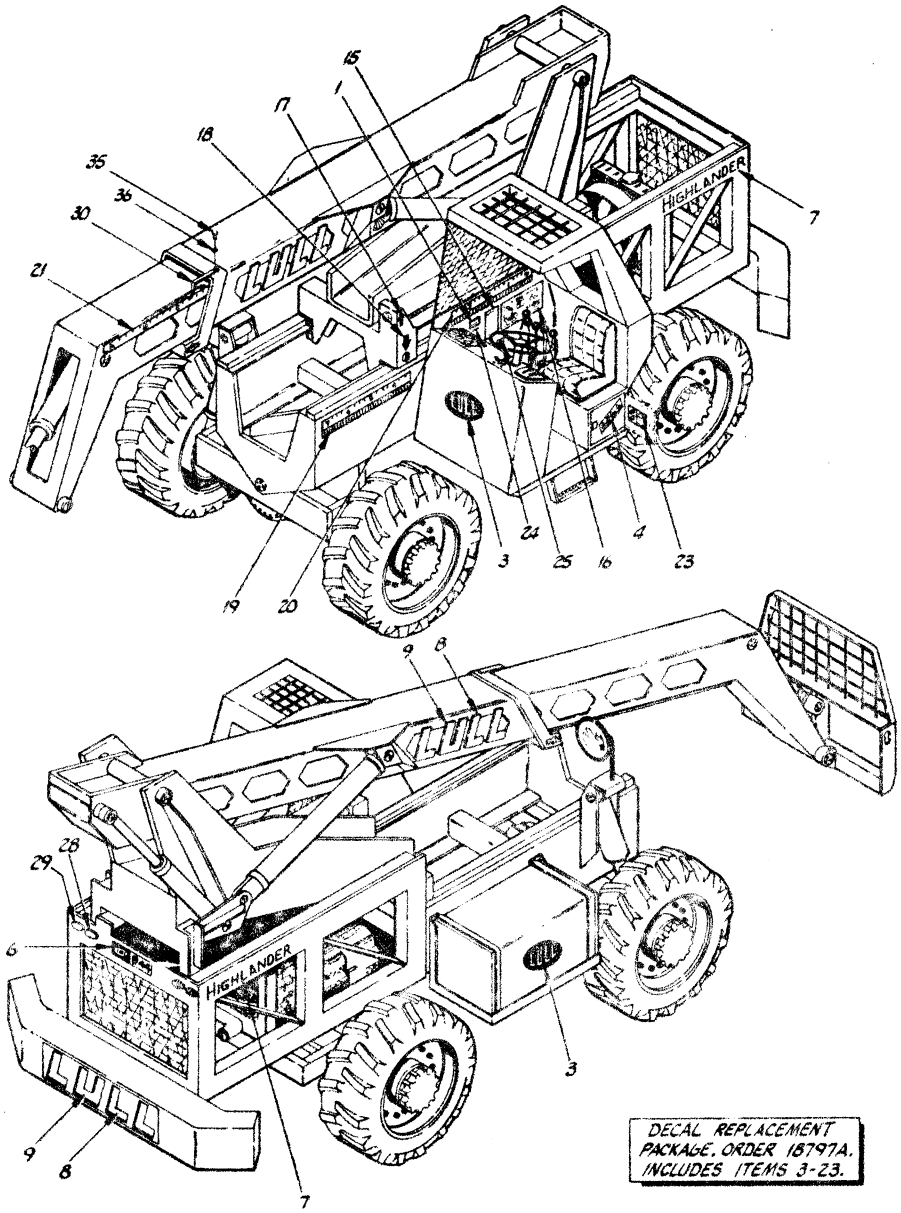

DECAL REPLACEMENT PACKAGE. ORDER 18797A. INCLUDES ITEMS 3-23.

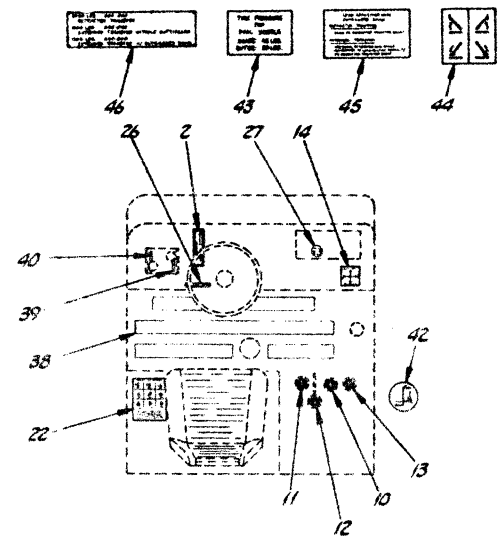

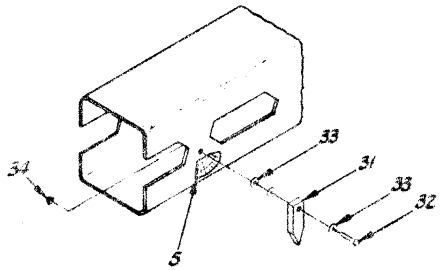

NOTES:

A) FOR MACHINES EQUIPPED WITH TOWER. USE P21788.
B) FOR MACHINES W/ DETROIT OR DEUTZ ENGINES.
C) FOR MACHINES W/ DETROIT OR WAUK. ENGINES.
D) FOR MACHINES W/ DEUTZ ENGINES ONLY.
E) USED EARLY PRODUCTION.
F) NOT ILLUSTRATED.

	ITEM	PART NO.	DESCRIPTION	REQ
	REF	P16955	RUBBERTONE	-
	REF	P17609	PAINT, SILVER ENAMEL	-
	REF	P16953	PAINT, BLACK ENAMEL	-
	REF	P16952	PAINT THINNER	-
	REF	P16951	PRIMER, YELLOW	-
	REF	P16950	PAINT, ORANGE ENAMEL	-
	REF	P16949	NAPTHOLITE	-
	46	P24926	TAG, TRUSS BOOM CAPACITY	-
	45	P20859	DECAL, OUTRIGGER CAP.	-
	44	P20432	DECAL, RIGGER MOVEMENT	-
	43	P19786	DECAL, TIRE PRESS.-DUALS	-
	42	P18835	DECAL, TOWER MOVEMENT	-
F)	41	P21788	DECAL, TOWER LOAD CHART	-
E)	40	P17819	DECAL, F-N-R	-
E)	39	P17818	DECAL, SHIFT PATTERN	-
	38	P17845	SURFACING, NO-SLIP	A/R
F)	37	COM'L	DRIVESCREW, RD.HD. #4 x 1/4"	10
	36	COM'L	LOCKWASHER, 3/8"	1
	35	COM'L	BOLT, HX. 3/8"-16 x 3/4"	1
	34	COM'L	LOCKNUT, HX. 5/16"-18	1
	33	COM'L	FLATWASHER, 5/16"	3
	32	COM'L	BOLT, HX. 5/16"-18 x 1 1/4"	1
	31	16335A	ANGLE INDICATE POINTER	1
	30	16306A	BOOM EXTENSION POINTER	1
	29	P18992	REFLECTOR, YELLOW	2
	28	P18991	REFLECTOR, RED	2
D)	27	P19944	DECAL, OIL & BELT WARNING	1
C)		P18041	EMERGENCY SHUT-OFF TAG	1
B)	26	P17720	ENGINE SHUT-OFF TAG	1
	25	P16633	FOUR WHEEL DRIVE TAG	1
	24	P19792	U.S. PATENT TAG	1
	23	P25350	DECAL, LUB SCHEDULE	1
	22	P21406	DECAL, FORK LIFT SIGNALS	1
	21	P19074	DECAL, BOOM EXT. INDICATE	1
	20	P19073	DECAL, TRANSFER INDICATE.	1
	19	P19072	DECAL, TRANSFER INDICATE.	1
	18	P19071	DECAL, ARROW-LARGE	1
	17	P19070	DECAL, ARROW-SMALL	1
A)	16	P18193	DECAL, LOAD CHART	1
	15	P18814	DECAL, WARNING	1
	14	P18836	DECAL, BOOM MOVEMENT	1
	13	P18818	DECAL, VEHICLE TILT	1
	12	P18190	DECAL, AUXILIARY	1
	11	P18189	DECAL, TRANS. CYL. CONT.	1
	10	P18188	DECAL, TILT CYL. CONTROL	1
	9	P18186	DECAL, LETTER "U"	3
	8	P18185	DECAL, LETTER "L"	9
	7	P18184	DECAL, "HIGHLANDER"	2
	6	P18183	DECAL, MODEL "844"	1
	5	P18003	DECAL, ANGLE INDICATOR	1
	4	P17607	DECAL, MANUFACTURE	1
	3	P17586	DECAL, "LULL" LOGO	2
	2	P16629	STEER SELECTOR TAG	1
	1	P16634	SERIAL NUMBER TAG	1

LULL Engineering Co., Inc. ST. PAUL MINNESOTA 55121

DRAWN BY: [signature] S/N 101 THRU

DRAWING TITLE: DECAL LOCATION ASSEMBLY MODEL 844

SCALE: D

DRAWING NO. 16815

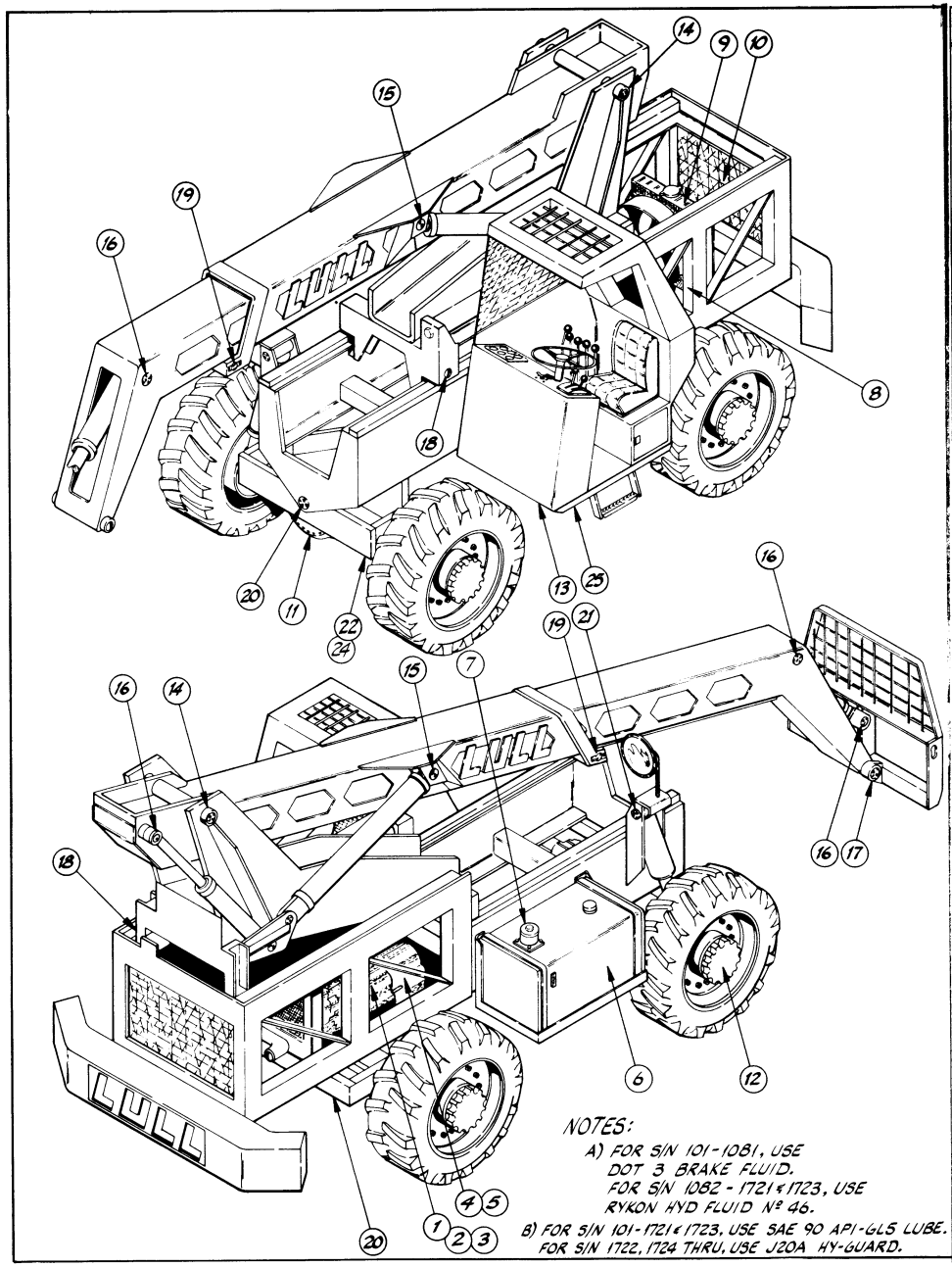

NOTES:

A) FOR S/N 101-1081, USE DOT 3 BRAKE FLUID. FOR S/N 1082 - 1721 & 1723, USE RYKON HYD FLUID Nº 46.

B) FOR S/N 101-1721 & 1723, USE SAE 90 API-GL5 LUBE. FOR S/N 1722, 1724 THRU, USE J20A HY-GUARD.

SYSTEM CAPACITIES

HYDRAULIC SYSTEM & RESERVIOR	50 GALS.
FUEL TANK	40 GALS.
COOLING SYSTEM	18 QTS.
ENGINE CRANKCASE - SEE ENGINE MANUAL	
TRANSMISSION - DRAIN & REFILL - APPOX.	15 QTS.
DIFFERENTIAL (FOR S/N 101-1721 & 1723, USE 11 PTS.)	13 QTS.
PLANETARY HUB (EACH)	2.4 PTS.

TIRES - 13.00 x 24 8 PLY	PER TIRE
CALCIUM CHLORIDE	115 LBS.
WATER	33 GALS.

LOCATION CODE	ITEM NAME	EVERY 8 HRS	EVERY 20 HRS	FIRST 40 HRS	FIRST 50 HRS	EVERY 100 HRS	EVERY 200 HRS	EVERY 500 HRS	EVERY 1000 HRS	EVERY 2000 HRS	LUBRICATION
1	ENGINE OIL	INSP			CR	CR					SEE ENGINE MANUAL
2	FUEL FILTER							INSP	CR		
3	ENGINE OIL FILTER				CR	CR					
4	TRANSMISSION OIL		INSP	CR				CR			ALLISON C3 (MIL-L-2104 GR10)
5	TRANS FILTER			CR				CR			
6	HYDRAULIC RESERVIOR	INSP							CR		RYKON HYD FLUID Nº 46
7	HYD. RES. FILTER							CR			
8	AIR CLEANER - FILTER							CLN		CR	CLEAN w/ AIR HOSE OR WATER
9	RADIATOR		INSP							CR	PERMAGUARD ANTI-FREEZE
10	BATTERY						INSP				DISTILLED WATER
11	AXLE DIFFERENTIAL				CR		INSP		CR		SAE-90 API-GL5 LUBE
12	PLANETARY HUB				CR		INSP		CR		SEE NOTE (B)
13	MASTER BRAKE CYL.					INSP					SEE NOTE (A)
UNDER DUSTY OR SEVERE OPERATION - SERVICE AT HALF INTERVALS											ZERK QTY. PER ITEM
14	BOOM PIVOT		INSP								SUPER PERMALUBE 2
15	HOIST PIVOT		INSP								4
16	TILT CYLINDER PIVOT		INSP								4
17	CARRIAGE PIVOT		INSP								1
18	TRANSFER ROLLERS		INSP								4
19	BOOM ROLLERS		INSP								4
20	OSCILLATION PIVOT		INSP								4
21	FRAME TILT PIVOT		INSP								2
22	TIE ROD ENDS		INSP								4
23	U-JOINTS		INSP								4
24	STEERING CYL. PIVOT		INSP								8
25	BRAKE ARM PIVOT		INSP								1
26	DRIVE SHAFTS		INSP								SUPER PERMALUBE 2

INSP = INSPECT PROPER LEVELS AND ADD LUBRICATION IF NECESSARY.
CR = CHANGE LUBRICANT AND REPLACE FILTER WHERE APPLICABLE.

ALL FLUID SYSTEMS SHOULD BE INSPECTED AND CHANGED WHENEVER OIL SHOWS TRACES OF CONTAMINATION OR HIGH OPERATING TEMPERATURES EVIDENCED BY STRONG ODOR OR DISCOLORING OR SEPARATION.

MAXIMUM TIRE PRESSURE, COLD: 50 PSI.
DUAL WHEEL TIRE PRESSURE, COLD: 30 PSI. OUTER - 45 PSI. INNER.

LULL CORPORATION ST. PAUL MINNESOTA 55121

Jeff Paul S/N 101 THRU

LUBRICATION SCHEDULE MODEL 844

D

16816

MODEL 844

MISCELLANEOUS FILTERS

PART NUMBERS	318 Chrysler	276 John Deere	159 Detroit (3-53)	212 Detroit (4-53)	287 Deutz	283 Waukesha	FILTERS	REMARKS
P12089	X						Oil Filter	
P19513						X	Oil Filter	
P19848					X		Oil Filter	
P22640			X				Oil Filter	Spin-On
P19535			X				Oil Filter	Element
P19287				X			Oil Filter	
P22635		X					Oil Filter	
P15267	X						Fuel Filter	
P17316						X	Fuel Filter	
P19856					X		Fuel Filter	
P22641			X				Fuel Filter-Primary	Spin-On
P22642			X				Fuel Filter-Secondary	Spin-On
P19288			X				Fuel Filter-Primary	Element
P19289			X	X			Fuel Filter-Secondary	Element
P22636		X					Fuel Filter	
P17276	X					X	Air Filter	
P19476			X	X	X		Air Filter	
P12179		X					Air Filter	For Machine W/Single Filter Air Cleaner
P21498		X					Air Filter-Primary	For Machine W/Dual Filter Air Cleaner
P21499		X					Air Filter-Safety	For Machine W/Dual Filter Air Cleaner
P19133	X	X	X	X	X	X	Transmission	Spin-On
P17815	X					X	Transmission	Element
P19801	X	X	X	X	X	X	Hydraulic Oil	Spin-On
P13586	X		X	X		X	Hydraulic Oil	Element
P24315		X	X		X		Hydraulic Oil	Element, Tank Mounted (S/N 991 THRU)

16816-A

LULL ENGINEERING COMPANY, INC.
3045 HIGHWAY 13
ST. PAUL, MINN 55121

INDEX OF PARTS

PARTS	PAGE
Alternator	18
Arms Rocker	7
Bearings	1
Breather	7
Camshaft	3
Connecting Rods	1
Gear Cover	15
Cover, Rocker Arm	7
Crankcase (Left Side)	10
Crankcase (Right Side)	9
Crankshaft	1
Cylinder Head	5
Exhaust Manifold	17
Fan	19
Fuel Filter	21
Lube Filter	14
Flywheel Housing	4
Fuel Pump	22
Thermostat	19
Injection Pump	23
Intake Manifold	17
Oil Pan	13
Oil Pump	11
Parts Not Illustrated	25

PARTS	PAGE
Pistons	1
Pulley Camshaft	1
Pump, Water	19
Starter	4
Starter Switch	4

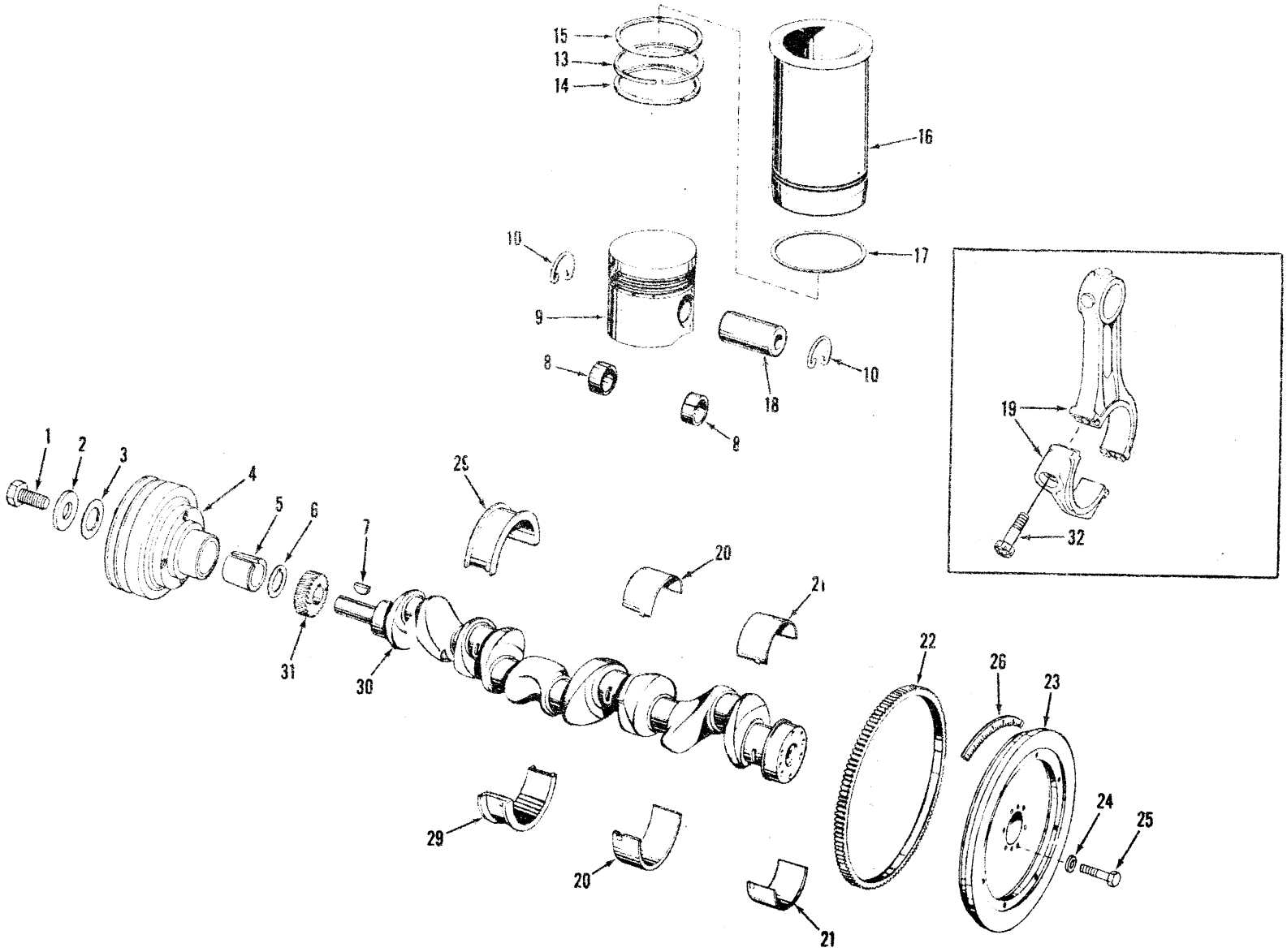

CRANKSHAFT, PISTONS, CONNECTING RODS, BEARINGS & PULLEY

LULL ENGINEERING COMPANY, INC.
3046 HIGHWAY 13
ST. PAUL, MINN. 55121

WAUKESHA VRO 283

REF. NO.	PART NO.	DESCRIPTION	QTY. REQ.
1	Comm	Screw (3/4" x 1-3/4" NF Hex Hd)	1
2	P18005	Washer Flat	1
3	P18006	Gasket	1
4	P17820	Pulley Crankshaft	
5	P17821	Taper, Crankshaft Pulley	1
6	P18200	Gasket	1
7	P18201	Key, Woodruff	1
8	P18202	Bushing, Piston Pin	12
9	P18203	Piston	6
10	P18204	Retainer, Piston Ring	12
11			
12			
13	P18205	Ring Piston, Compression	6
14	P18206	Ring, Piston Oil	6
15	P18207	Ring, Piston Top Compression	6
16	P18208	Sleeve, Cylinder	6
17	P18209	Ring, Packing, Cylinder Sleeve	12
18	P18210	Pin Piston	6
19	P18211	Rod, Connecting (Includes 8,20,32)	6
19	P18212	Rod, Connecting (Includes 8, 32)	6
20	P18213	Bearing, Connecting Rod	12
21	P18214	Main Bearing	12
22	P18215	Ring Gear, Flywheel	1
23	P18216	Flywheel Assy (Includes #22)	1
24	P18217	Washer Flat	6
25	P18218	Bolt, Flywheel	6
26	P18219	Strip, Timing	1
27			
28			
29	P18220	Bearing, Main, Thrust	2
30	P18221	Crankshaft	1
31	P18222	Gear, Crankshaft	1
32	P18223	Screw, Cap	12

REF. NO.	PART NO.	DESCRIPTION	QTY. REQ.
1	P18224	Rod, Push	12
2	P18225	Valve Lifter	12
3	P18226	Gear Camshaft	1
4	P18227	Button, Thrust	1
5	P18228	Spring Thrust Button	1
6	P18229	Bushing, Camshaft	4
7	P18230	Key, Woodruff	1
8	P18231	Camshaft Assy (Includes 3, 7)	1
8	P18232	Camshaft	1
9	P18233	Gear, Idler	1
9	P18234	Gear, Idler Assy (Includes 11,12,15)	1
10	P18235	Spindle, Idler Gear	1
11	P18236	Screw, Cap, Hex Head	2
12	P18237	Washer, Shakeproof	2
13	P18238	Spring, Idler Gear Plunger	1
14	P18239	Plunger, Idler Gear	1
15	P18240	Gear, Injection Pump Drive	1

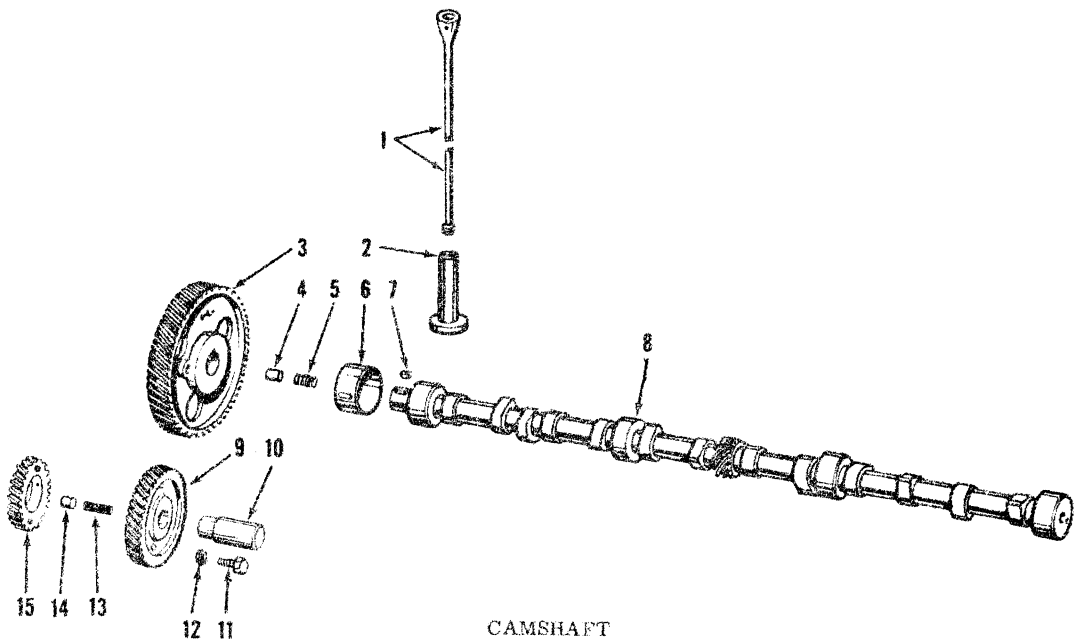

CAMSHAFT

LULL ENGINEERING COMPANY, INC.
3045 HIGHWAY 13
ST. PAUL, MN 55121

WAUKESHA VRD 283

REF. NO.	PART NO.	DESCRIPTION	QTY. REQ.
1	P18241	Flywheel Housing	1
2	P18242	Timing Pointer	1
3	P18243	Cover, Timing Hole	1
4	P18244	Washer, Lock	1
5	P18245	Screw, Cap, Hex Head	1
6	P18246	Pin Dowel	2
7	P18247	Washer, Lock	13
8	P18248	Screw, Cap, Hex Head	8
9	P18249	Dust Plate	1
10	P18250	Screw, Cap, Hex Head	2
11	P17321	Starter	1
12	P12634	Switch, Key Start	1

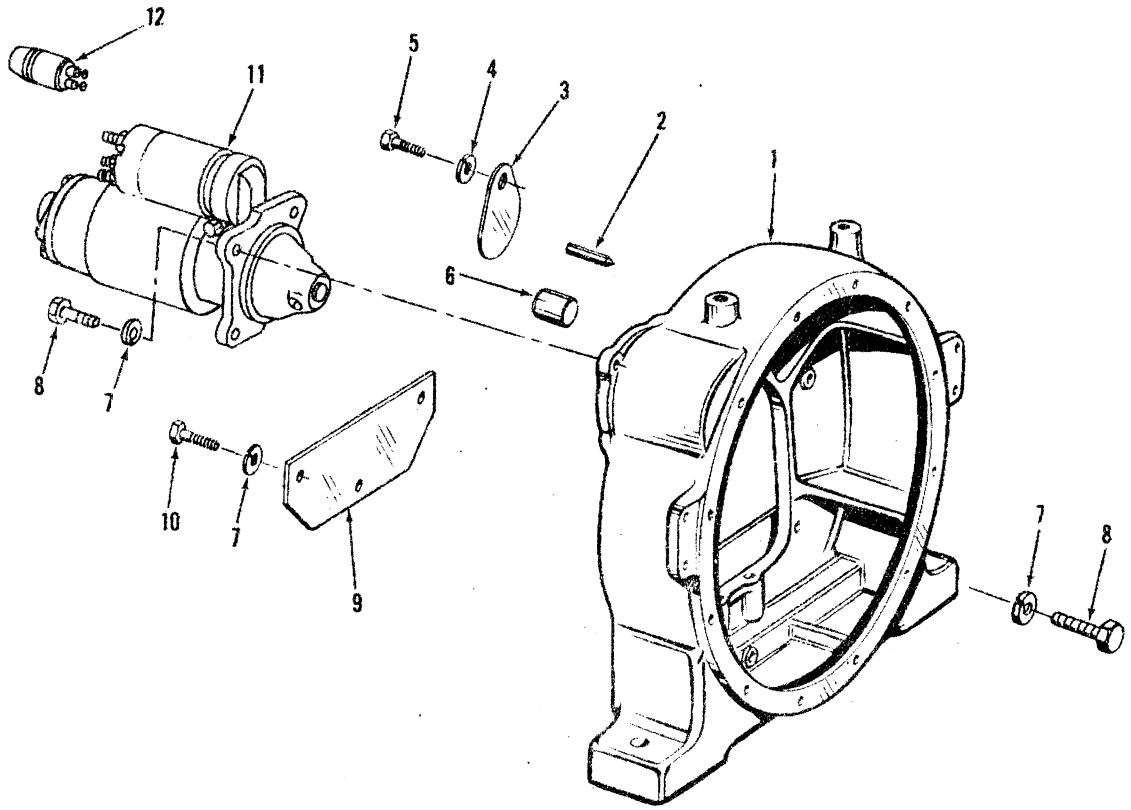

FLYWHEEL HOUSING, STARTER & SWITCH

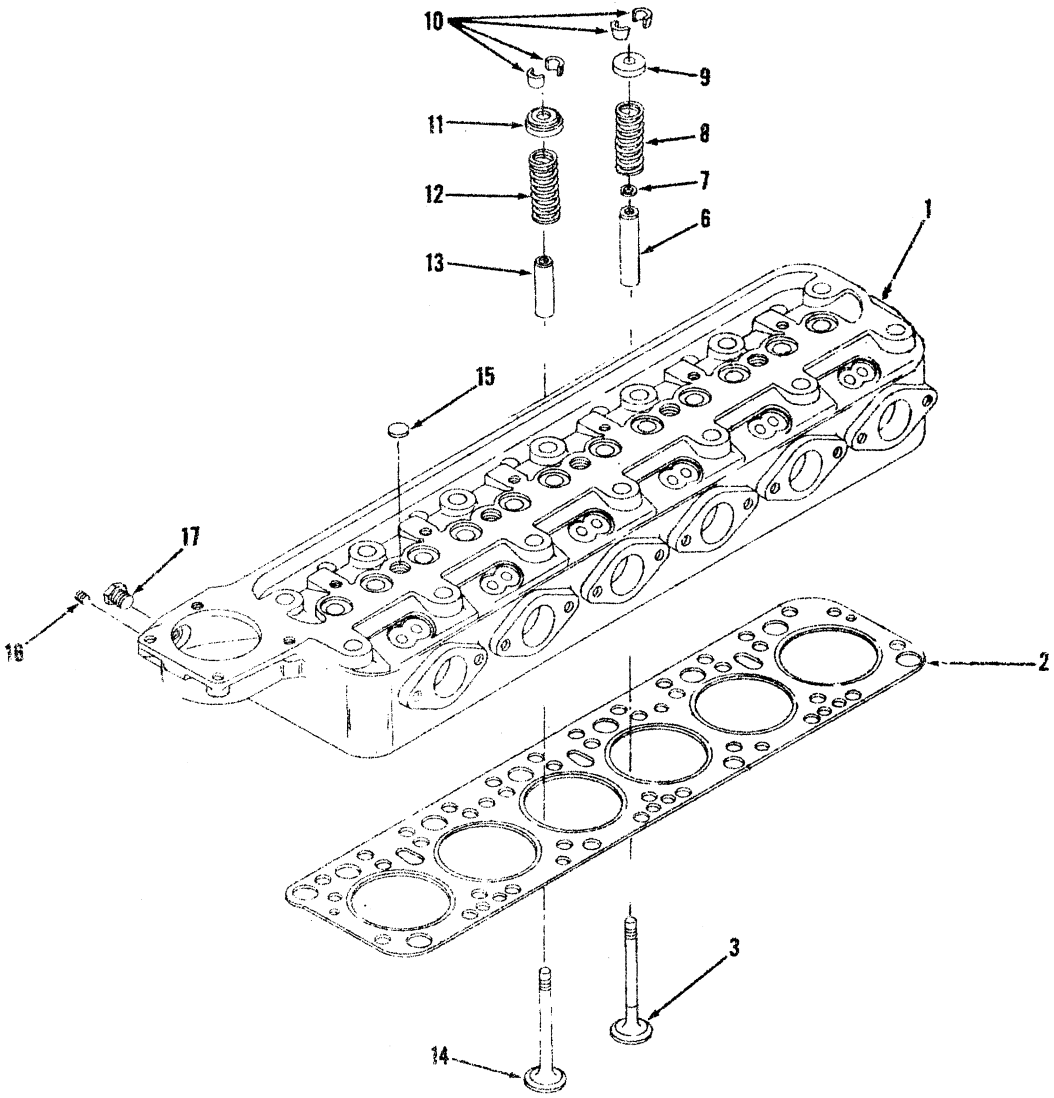
10
9
11
8
12
7
6
1
13
15
17
16
2
3
14

LULL ENGINEERING COMPANY, INC.
3045 HIGHWAY 13
ST. PAUL, MN 55121

REF. NO.	PART NO.	DESCRIPTION	QTY. REQ.
1	P18252	Head, Cylinder (Includes 4,6,13,15 & 16)	1
1	P18253	Head, Cylinder (Includes 3,6-17)	1
2	P17963	Gasket, Cylinder Head	1
3	P18254	Valve, Intake	6
4			
5			
6	P18255	Guide, Intake Valve	6
7	P18256	Seal, Valve Stem	12
8	P18257	Spring, Intake Valve	6
9	P18258	Retainer, Valve Spring	6
10	P18259	Taper Valve	24
11	P18258	Retainer, Valve Spring	6
12	P18257	Spring, Exhaust Valve	6
13	P18255	Guide, Exhaust Valve	6
14	P18260	Valve, Exhaust	6
15	P18261	Plug, Pipe	5
16	P18262	Plug, Pipe	1
17	P18263	Plug, Pipe	1

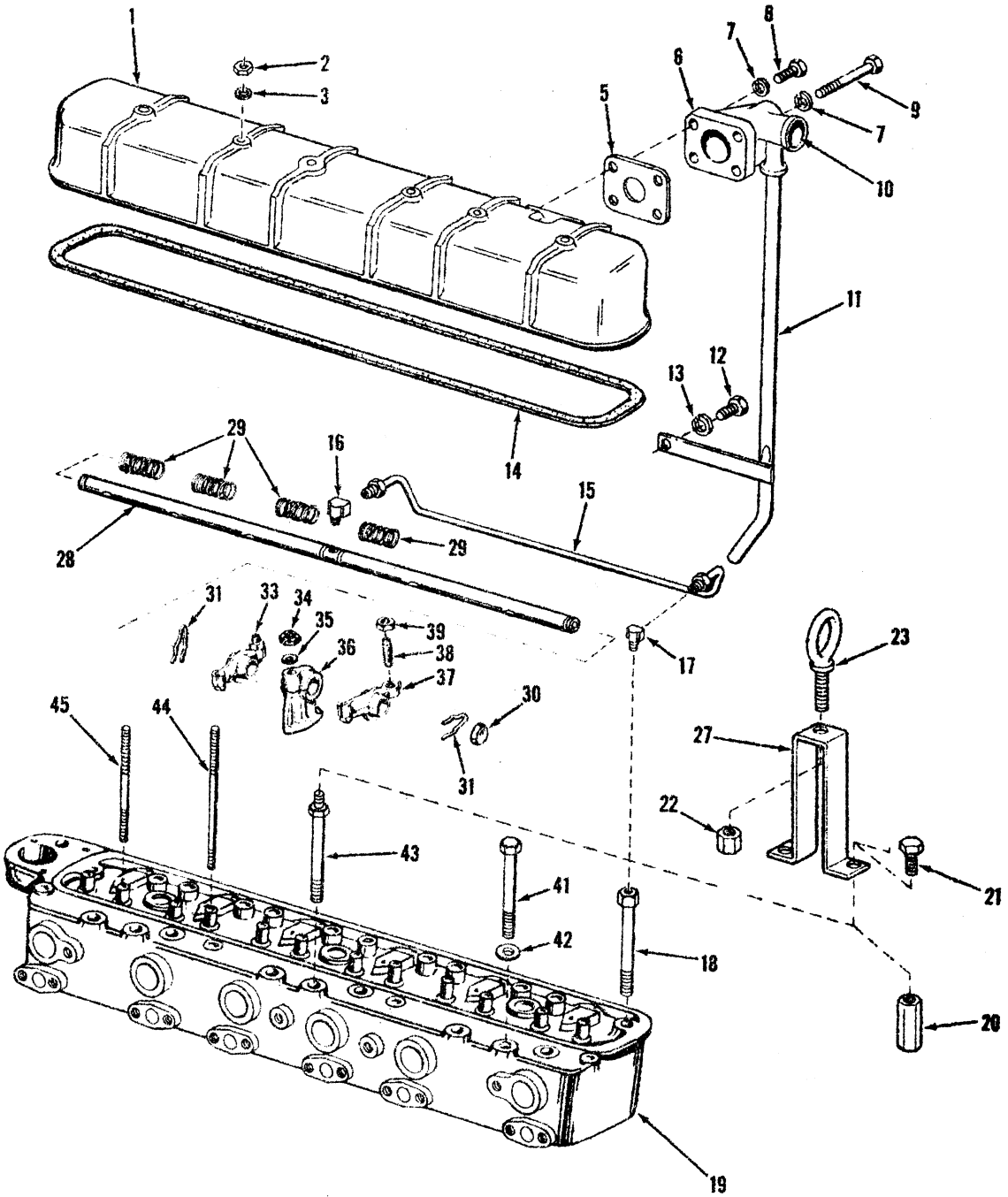

ROCKER ARMS - ROCKER ARM COVER & BREATHER

LULL ENGINEERING COMPANY, INC.
3045 HIGHWAY 13
ST. PAUL, MINN 55121

WAUKESHA VRD 283

REF. NO.	PART NO.	DESCRIPTION	QTY. REQ.
1	P18264	Cover, Rocker Arm	1
2	P18265	Nut, Hex	6
3	P18266	Washer, Flat	6
4		Not Required VRD 283	
5	P18267	Gasket	1
6	P18268	Flange, Breather	1
7	P18269	Washer, Lock	4
8	P18236	Screw, Hex Head	2
9	P18270	Screw, Hex Head	2
10	P18271	Plug	1
11	P18272	Tube, Breather	1
12	P18273	Screw, Hex Head	1
13	P18247	Washer, Lock	1
14	P17964	Gasket	1
15	P18274	Line Oil Assy	1
16	P18275	Elbow, Inverted	1
17	P18275	Elbow, Inverted	1
18	P18276	Screw, Cap, Cylinder Head	1
19	P18252	Head, Cylinder	1
20	P18277	Coupling	2
21	P18278	Screw, Hex Head	2
22	P18279	Nut, Hex	1
23	P18280	Bolt, Eye	1
24			
25			
26			
27	P18281	Lifting Bracket	1
28	P18282	Rocker Arm Shaft Assy. (Includes 29-31, 33, 36-39)	1
28 A	P18283	Rocker Arm Shaft Assy (Includes 30)	1
29	P18284	Spring	4
30	P18285	Plug, Cup	2
31	P18286	Cotter, Rocker Arm Shaft	4
32		Not Required VRD 283	
33	P18287	Rocker Arm Assy. RH (Includes 38,39)	6
34	P18465	Nut, Hex	6
35	P18247	Washer, Lock	6
36	P18288	Support, Rocker Arm	6
37	P18289	Rocker Arm Assy LH (Includes 38,39)	6
38	P18290	Screw, Adjusting	12
39	P18291	Nut, Hex	12
40		Not Required VRD 283	
41	P18292	Screw, Cylinder Head Cap	11
42	P18293	Washer, Cylinder Head	14
43	P18294	Screw, Cylinder Head Cap	2
44	P18295	Stud, Rocker Arm Support	2
45	P18296	Stud, Rocker Arm Cover	4

LULL ENGINEERING COMPANY, INC.
3045 [illegible]
ST. PAUL, MINN 55121

WAUKESHA VRD 283

REF. NO.	PART NO.	DESCRIPTION	QTY. REQ.
1	P18297	Plug, Cup	1
2	P18298	Plug, Dist. Hole	1
3	P18299	Stud	1
4	P18300	Stud	2
5	P18301	Plug, Cup	1
6			
7	P18302	Tube, Oil, Timing Gears	1
8			
9	P18303	Bushing, Idler Gear	2
10	P18304	Sleeve, Idler Gear Assy. (Includes 9)	1
11			
12	P18305	Plunger, Oil Relief Valve	1
13	P18306	Spring, Oil Relief Valve	1
14	P18307	Washer, Copper	1
15	P18308	Screw, Oil Relief Valve	1
16	P18309	Screw, Fil. Head	4
17	P18310	Washer, Copper	4
18	P18311	Plate, Cover	1
19	P18312	Gasket, Cover	1
20	P18313	Plug, Pipe, Allen Headless	1
21			
22	P18314	Plug, Pipe, Square Head	1
23	P18315	Expansion Plug	1
24			
25			
26			
27			
28			
29	P18316	Plug, Cup	1

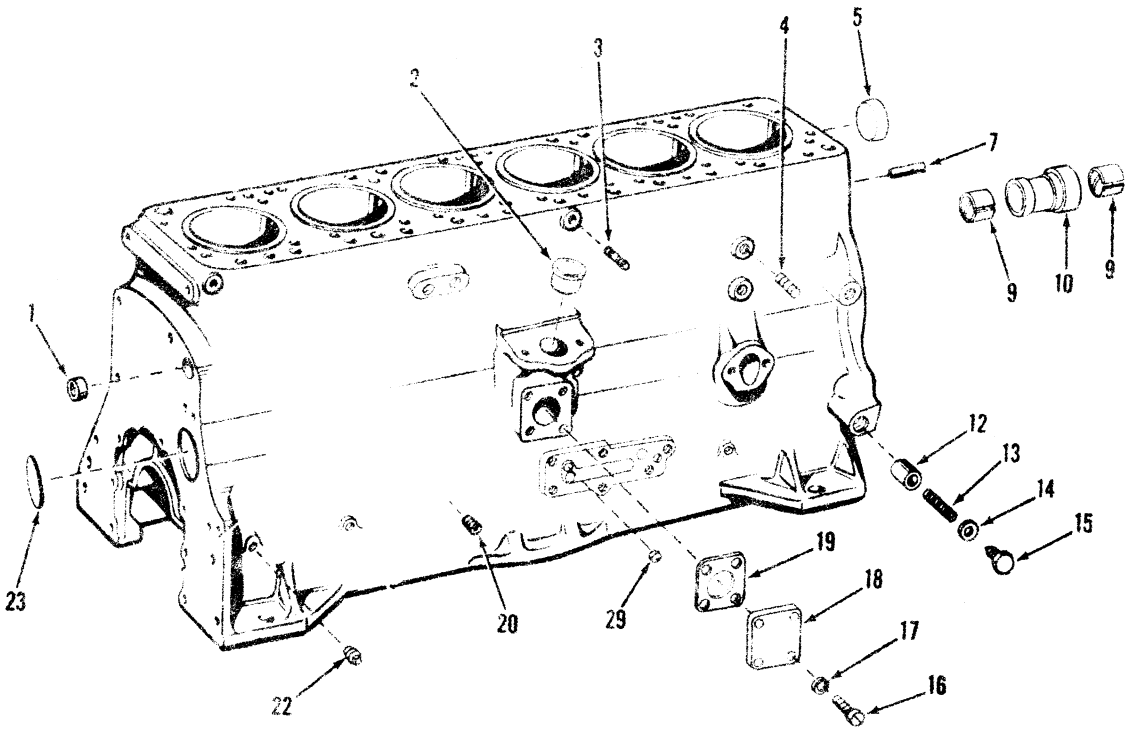

1753

LULL ENGINEERING COMPANY, INC
3045 HIGHWAY 13
ST. PAUL, MINN 55121

MAUKESHA VRD 283

REF. NO.	PART NO.	DESCRIPTION	QTY. REQ.
1	P18317	Crankcase Assy.	1
2	P18318	Plug, Pipe, Countersunk Headless	1
3	P18319	Pin, Dowel	2
4	P18320	Gasket, Oil Retainer	1
5	P18321	Pin, Dowel	2
6	P18322	Seal, Oil Rear	1
7	P18323	Retainer, Rear Oil Seal	1
8	P18324	Screw, Cap, Hex Head	8
9	P18325	Cap, Main Bearing	6
10	P18326	Washer, Lock	14
11	P18327	Screw, Main Bearing Cap	14
12	P18328	Cap, Main Bearing, Thrust	1
13	P18329	Pin, Dowel	14
14	P18330	Pipe, Oil Filter	1
15	P18331	Oil Gauge	1
16	P18332	Plug, Pipe, Slotted Head	6
17			
18			

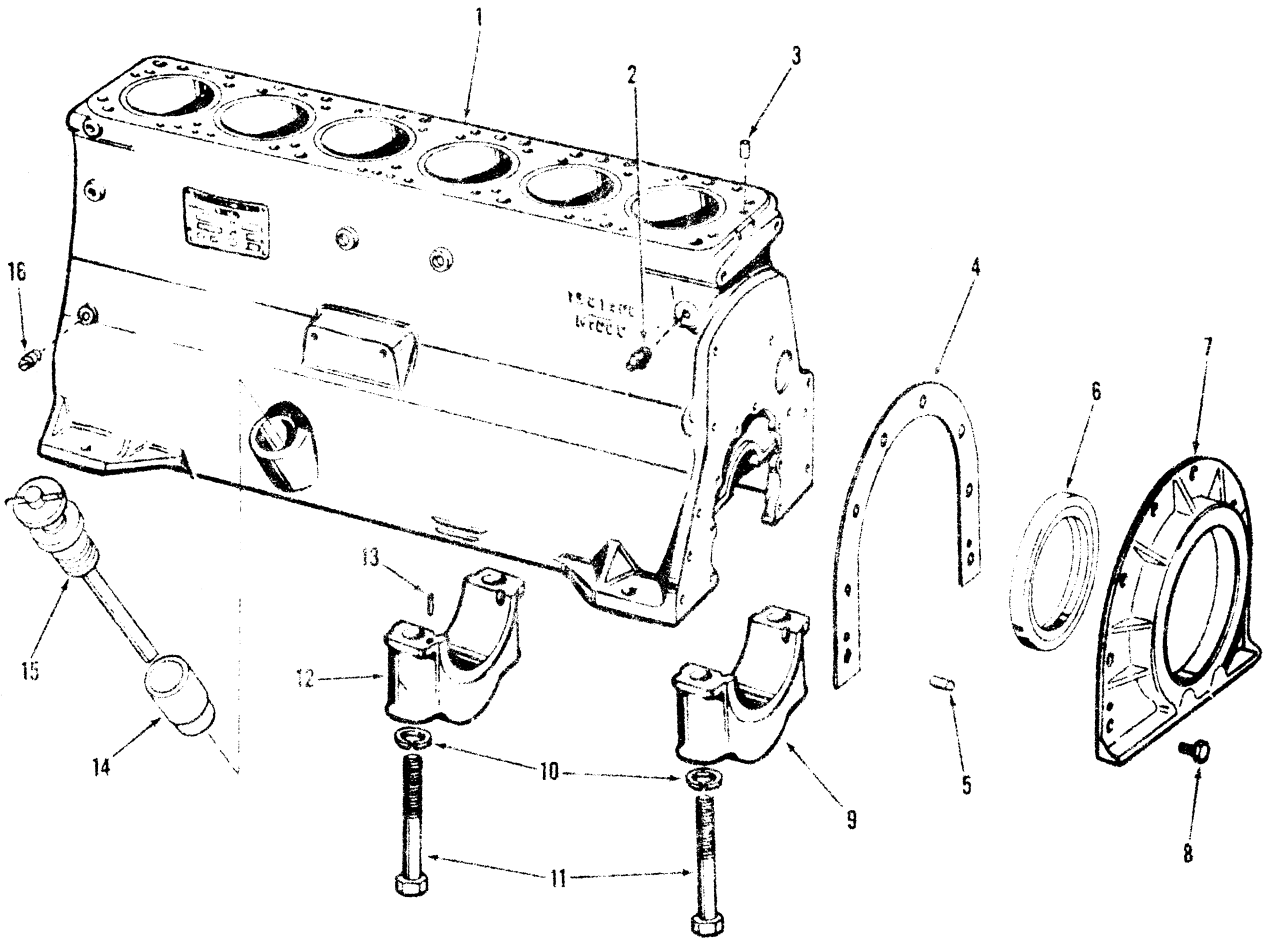

CRANKCASE - (Left Side)

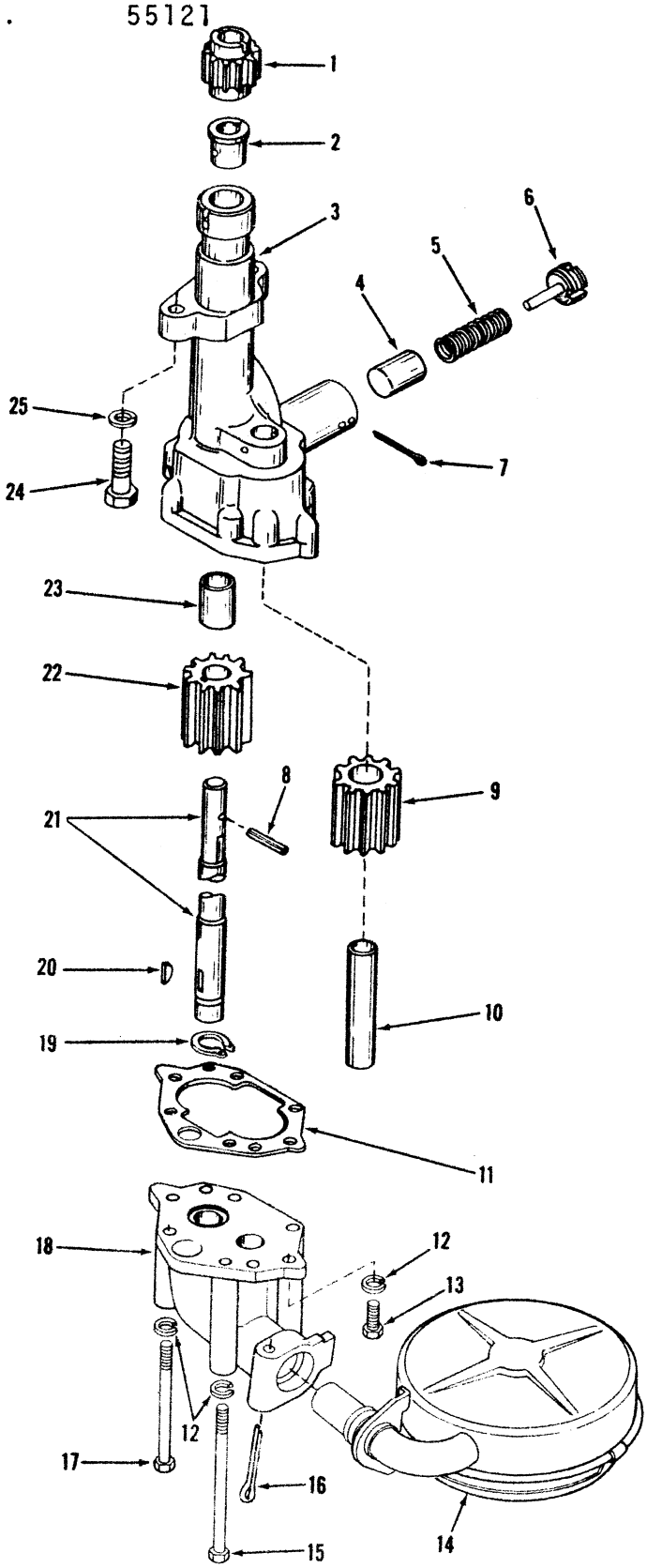

OIL PUM

REF. NO.	PART NO.	DESCRIPTION	QTY. REQ.
	P18339	Pump; Oil Assy. (Includes 1-23)	1
1	P18340	Gear, Oil Pump Drive	1
2	P18341	Bushing, Oil Pump Body, Upper	1
3	P18342	Oil Pump Body Assy. (Includes 2 & 23)	1
4	P18343	Plunger, Relief Valve	1
5	P18344	Spring, Relief	
6	P18345	Screw, Adjustment	1
7	P18346	Pin, Cotter	1
8	P18347	Pin, Roll	1
9	P18348	Gear, Oil Pump Idler	1
10	P18349	Shaft, Oil Pump Idler	1
11	P18350	Gasket, Oil Pump	1
12	P18269	Washer, Lock	6
13	P18236	Screw, Hex Head	4
14	P18351	Float, Oil Screen	1
15	P18352	Screw, Cap, Hex. Head	1
16	P18353	Pin, Cotter	1
17	P18354	Screw, Cap, Hex Head	1
18	P18355	Cover, Oil Pump	1
19	P18356	Ring, Retaining	1
20	P18357	Key, Woodruff	1
21	P18358	Shaft, Oil Pump Drive	1
21	P18359	Driveshaft, Oil Pump Assy. (Includes 19-22)	
22	P18360	Gear, Oil Pump, Driven	1
23	P18361	Bushing, Oil Pump, Lower	1
24	P18362	Screw, Cap, Hex Head	2
25	P18247	Washer, Lock	2

LULL ENGINEERING COMPANY, INC.
3045 HIGHWAY 13
ST. PAUL, MINN 55121

WAUKESHA VRD 283

REF. NO.	PART NO.	DESCRIPTION	QTY. REQ.
1	P17967	Gasket Oil Pan	1
2	P18333	Oil Pan	1
3	P18334	Bolt, Oil Pan	2
4	P18335	Plug, Oil Pan Drain	1
5	P18336	Gasket	1
6	P18337	Stud, Oil Pan	10
7	P18244	Washer, Lock	10
8	P18338	Nut, Hex	10
9	P18324	Screw, Cap, Hex Head	21

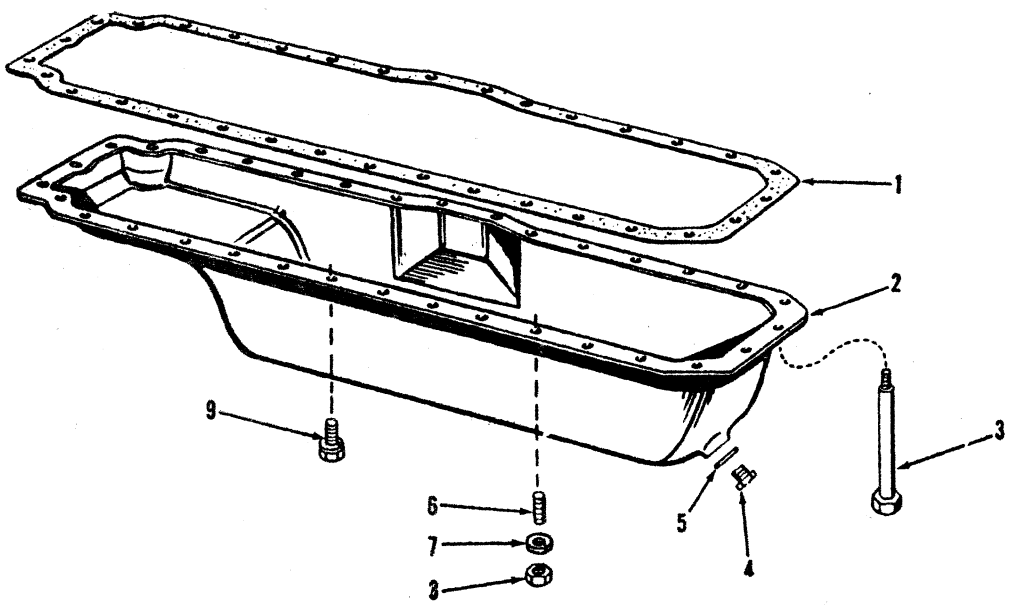

OIL PAN

LULL ENGINEERING COMPANY, INC.
3045 HIGHWAY 13
ST. PAUL, MINN 55121

WAUKESHA VRD 283

REF. NO.	PART NO.	DESCRIPTION	QTY. REQ.
		Oil Filter Assy.	1
1	P18363	Base; Oil Filter	1
2	P18364	Gasket, Filter Shell	1
3	P17317	Element, Oil Filter (Includes 2)	1
4	P18080	Shell Assy	1
5	P18081	Gasket, Center Bolt	1
6	P18082	Bolt, Center	1
7	P18366	Gasket, Filter Base	1
8	P18367	Seal	1
9	P18368	Valve, By-Pass	1
10	P18369	Washer, Copper	2
11	P18370	Plug, Relief Valve	2
12	P18318	Plug, Pipe	2
13	P18371	Washer, Brass	1
14	P18372	Screw; Cap Hex Head	1
15	P18373	Plug, Pipe	1
16	P18374	Screw, Hex Head	5

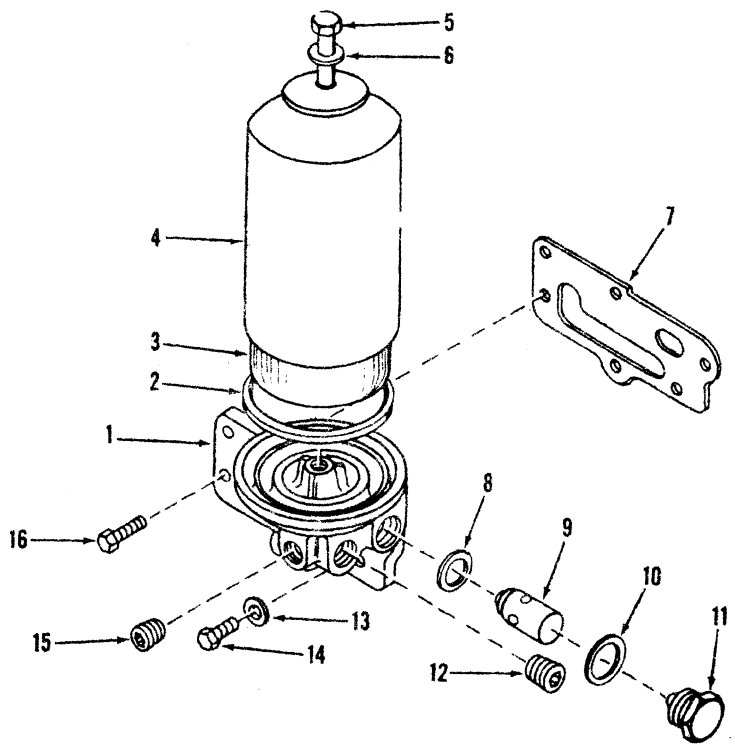

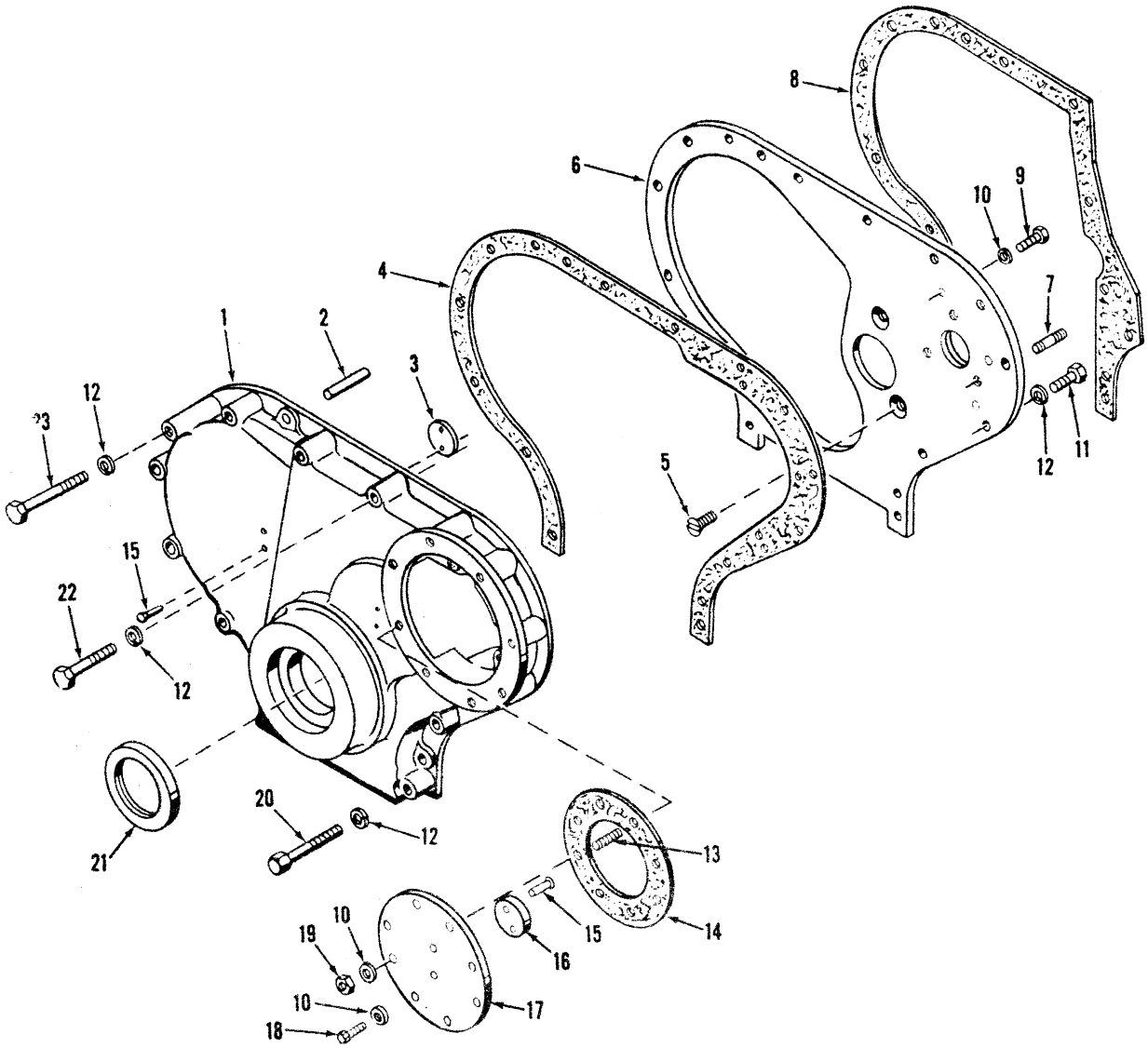

GEAR COVER

LULL ENGINEERING COMPANY, INC.
3045 HIGHWAY 13
ST. PAUL, MN 55121

REF. NO.	PART NO.	DESCRIPTION	QTY. REQ.
1	P18375	Gear Cover Assy. (Includes 3, 15,21)	1
2	P18391	Pin Dowel	2
3	P18376	Button, Thrust	2
4	P17966	Gasket, Gear Cover	1
5	P18377	Screw, Flat Head	2
6	P18378	Front Plate Assy (Includes 7)	1
7	P18379	Stud, Fuel Injection Pump	3
8	P18380	Gasket, Front Plate	1
9	P18381	Screw, Cap, Hex Head	3
10	P18382	Washer, Copper	11
11	P18383	Screw, Cap, Hex Head	5
12	P18244	Washer, Lock	15
13	P18337	Stud	1
14	P17968	Gasket, Injection Pump Gear Cover	1
15	P18384	Rivet, Countersunk Head	6
16	P18385	Button, Front	1
17	P18386	Fuel Pump Cover Assy. (Includes 15,16)	1
18	P18387	Screw, Cap, Hex Head	7
19	P18338	Nut, Hex	1
20	P18388	Screw, Cap, Hex Head	8
21	P17608	Seal, Shaft Oil	1
22	P18389	Screw, Cap, Hex Head	1
23	P18390	Screw, Cap, Hex Head	1

LULL ENGINEERING COMPANY, INC.
3045 HIGHWAY 13
ST. PAUL, MINN 55121

WAUKESHA VRD 283

REF. NO.	PART NO.	DESCRIPTION	QTY. REQ.
	P18399	Exhaust Manifold Assy. (Includes 7,9,14-16)	1
1	P18392	Manifold, Intake	1
2	P18313	Plug, Pipe, Allen Head	1
3	P18265	Nut, Hex	12
4	P18247	Washer, Lock	12
5	P18393	Gasket, Intake Manifold	6
6	P18394	Stud	12
7	P18395	Manifold, Exhaust	1
8			
9	P18394	Stud	16
10	P18396	Gasket, Exhaust Manifold	6
11	P18397	Nut, Hex	12
12			
13			
14	P18398	Shield, Heat	1
15	P18247	Washer, Lock	4
16	P18273	Screw, Hex Head	4

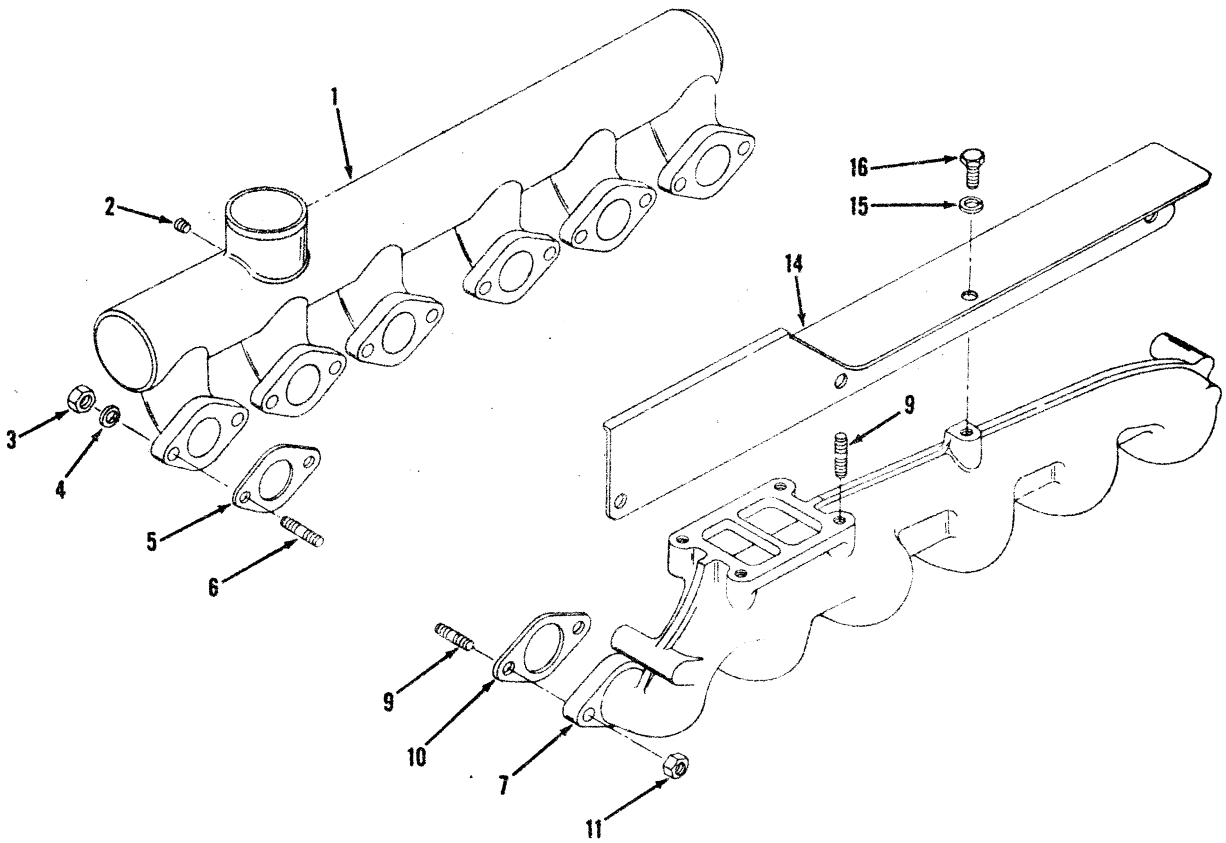

LULL ENGINEERING COMPANY, INC.
3045 HIGHWAY 13
ST. PAUL, MINNESOTA 55121

WAUKESHA VRD 283

REF. NO.	PART NO.	DESCRIPTION	QTY
1	P19844	Alternator	1
2	P18492	Strap, Adjusting	1
3	P18493	Stud	1
4	P18247	Lockwasher	2
5	P18265	Nut, Hex	1
6	P18494	Washer, Flat	1
7	P18244	Washer	2
8	P18495	Screw, Hex. Hd.	1
9	P18491	Pulley	1
10	P18496	Fan	1
11	P18497	Screw, Hex Hd.	1
12	P18498	Screw, Hex. Hd.	2
13	P18499	Lockwasher	2
14	P18500	Bracket	1
15	P18501	Washer, Flat	4
16	P18502	Spacer	1
17	P18503	Nut, Hex	1

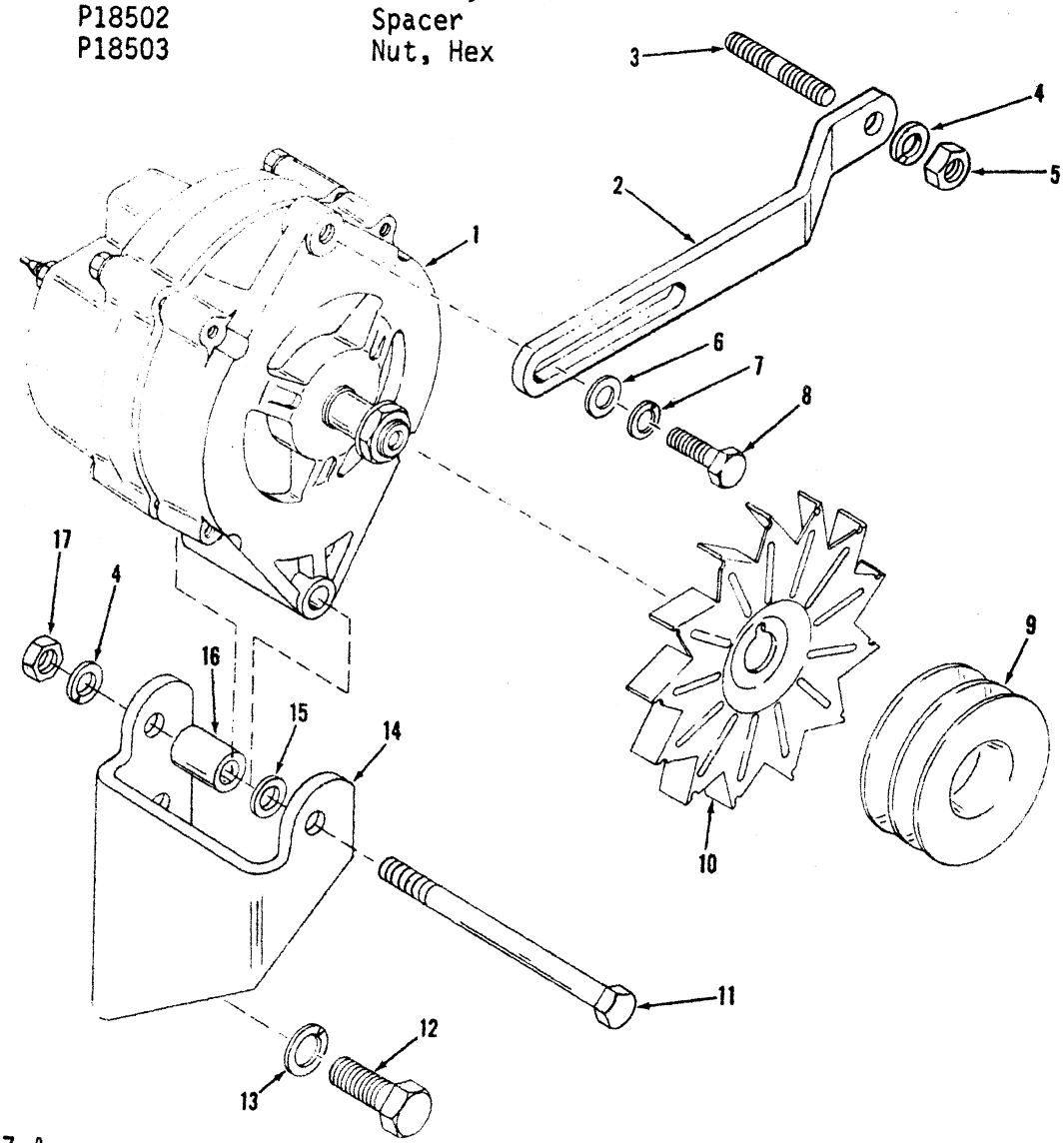

1757-A

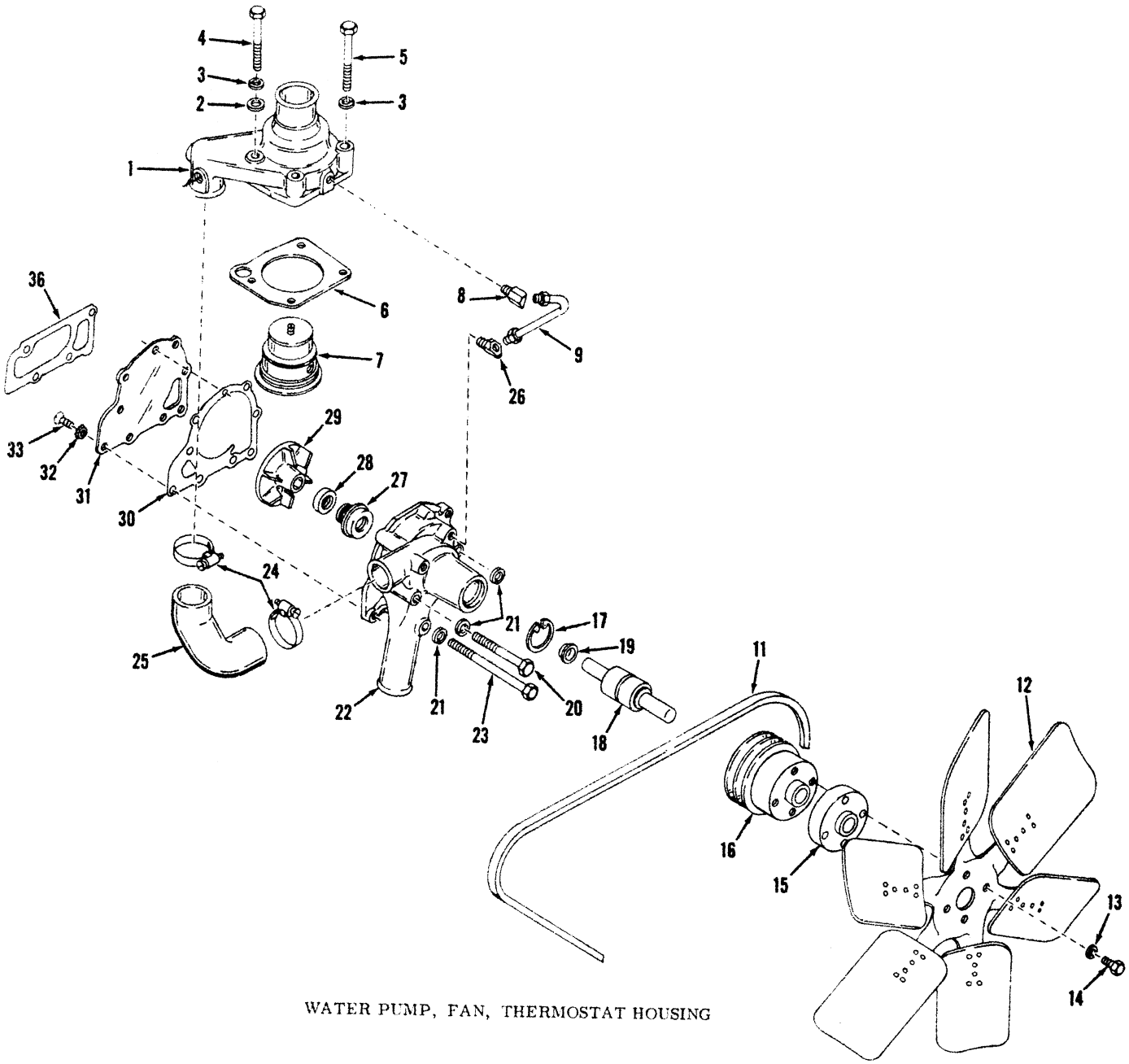

WATER PUMP, FAN, THERMOSTAT HOUSING

REF. NO.	PART NO.	DESCRIPTION	QTY. REQ.
	P17437	Water Pump Assy. (Includes 16-19, 22, 27-33)	1
1	P18400	Housing, Thermostat	1
2	P18401	Washer, Flat	1
3	P18402	Washer, Lock	4
4	P18403	Screw, Cap	1
4	P18404	Screw, Cap	3
5			
6	P18405	Gasket, Thermostat Housing	1
7	P18406	Thermostat	1
8	P18407	Elbow, Inverted	1
9	P18408	Vent Line Assy.	1
10	P18409	Screw, Cap	2
11	P17323	Belt, Water Pump (Set of Two)	1
12	P17320	Blade-Fan	1
13	P18244	Washer, Lock	4
14	P18410	Screw, Cap	4
15	P18411	Spacer, Fan Blade	1
16	P18412	Pulley, Water Pump	1
17	P18413	Ring, Retaining	1
18	P18414	Shaft, Water Pump (Includes 19)	1
19	P18415	Slinger, Oil	1
20	P18416	Screw, Cap	1
21	P18247	Washer, Lock	4
22	P18417	Body, Water Pump	1
23	P18418	Screw, Cap	1
24	P18419	Clamp, Hose	2
25	P18017	Hose Assy.	1
26	P18420	Elbow, Inverted	1
27	P18421	Seal, Water Pump	1
28	P18422	Seat, Water Pump Seal	1
29	P18423	Impeller, Water Pump	1
30	P18424	Gasket	1
31	P18425	Cover, Water Pump	1
32	P18426	Washer, Shakeproof	3
33	P18427	Screw, Flat Head	5
34			
35			
36	P18428	Gasket, Water Pump	1

REF. NO.	PART NO.	DESCRIPTION	QTY. REQ.
	P18440	Base Assy. (Includes 2-6, 11)	1
	P17412	Base Assy. (Includes 1-11)	1
1	P18429	Bracket, Fuel Filter	1
2	P18430	Plug, Filter Vent	1
3	P18431	Washer, Seal	1
4	P18432	Base	1
5	P18433	Plug, Filter Drain	1
6	P18434	Washer, Seal	1
7	P17316	Element	1
8	P18435	Clamp, Spring	1
9	P18248	Screw, Hex Head	4
10	P18247	Washer, Lock	4
11	P18436	Plug, Pipe	1
12			
13	P18437	Connector, Body	1
14	P18438	Connector	1
15			
16			
17			
18	P18439	Fuel Line Assy	1

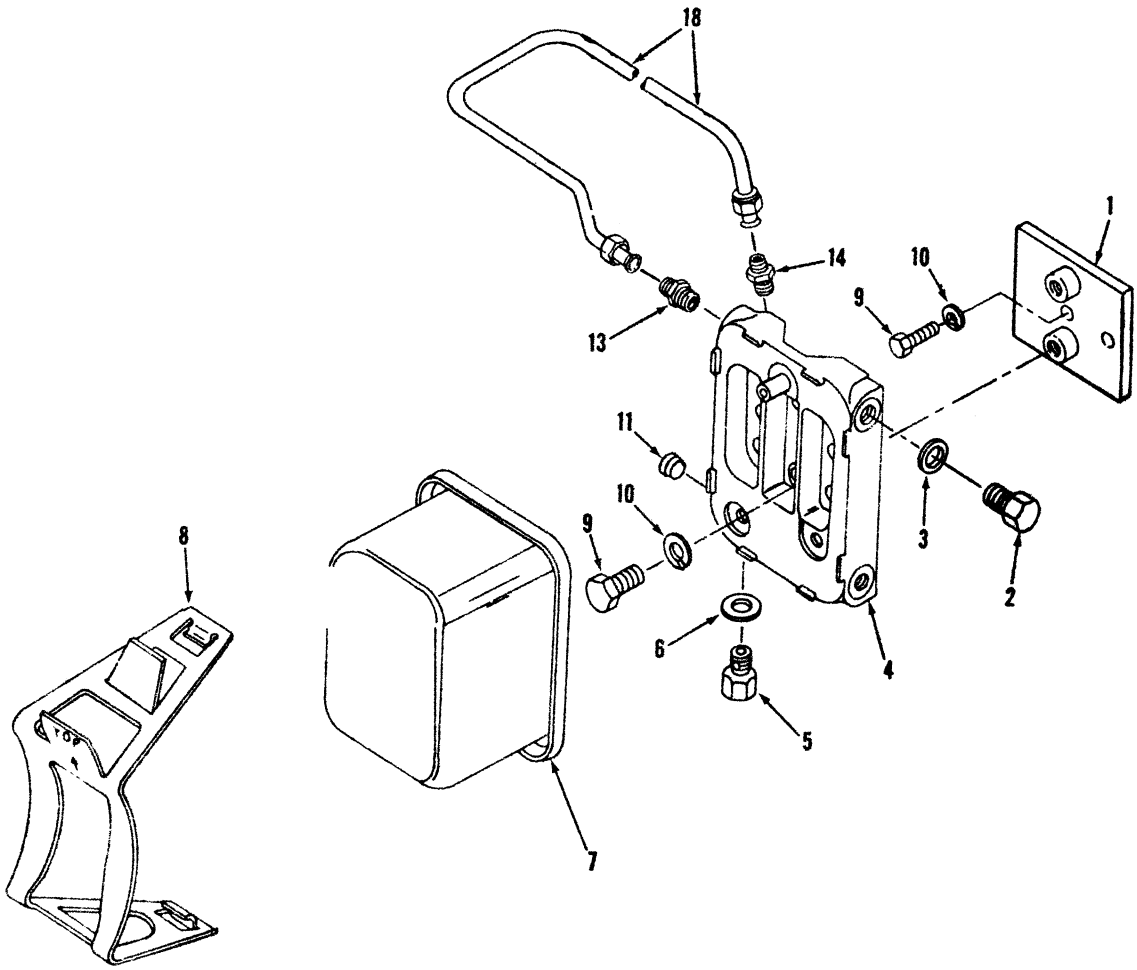

LULL ENGINEERING COMPANY, INC.
3045 HIGHWAY 13
ST. PAUL, MINN 55121

WAUKESHA VRD 283

REF. NO.	PART NO.	DESCRIPTION	QTY. REQ.
1	P18441	Gasket, Fuel Pump	1
2	P18442	Elbow	1
3	P17573	Pump, Fuel	1
4	P18443	Screw, Cap, Hex Head	2
5	P18382	Washer, Copper	2
6	P18444	Elbow	1
7	P18446	Fuel Line Assy.	1

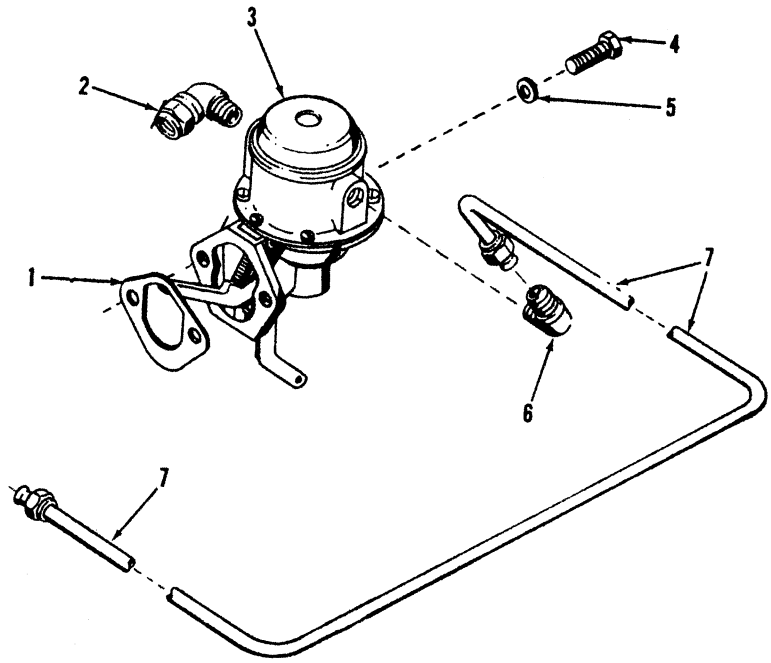

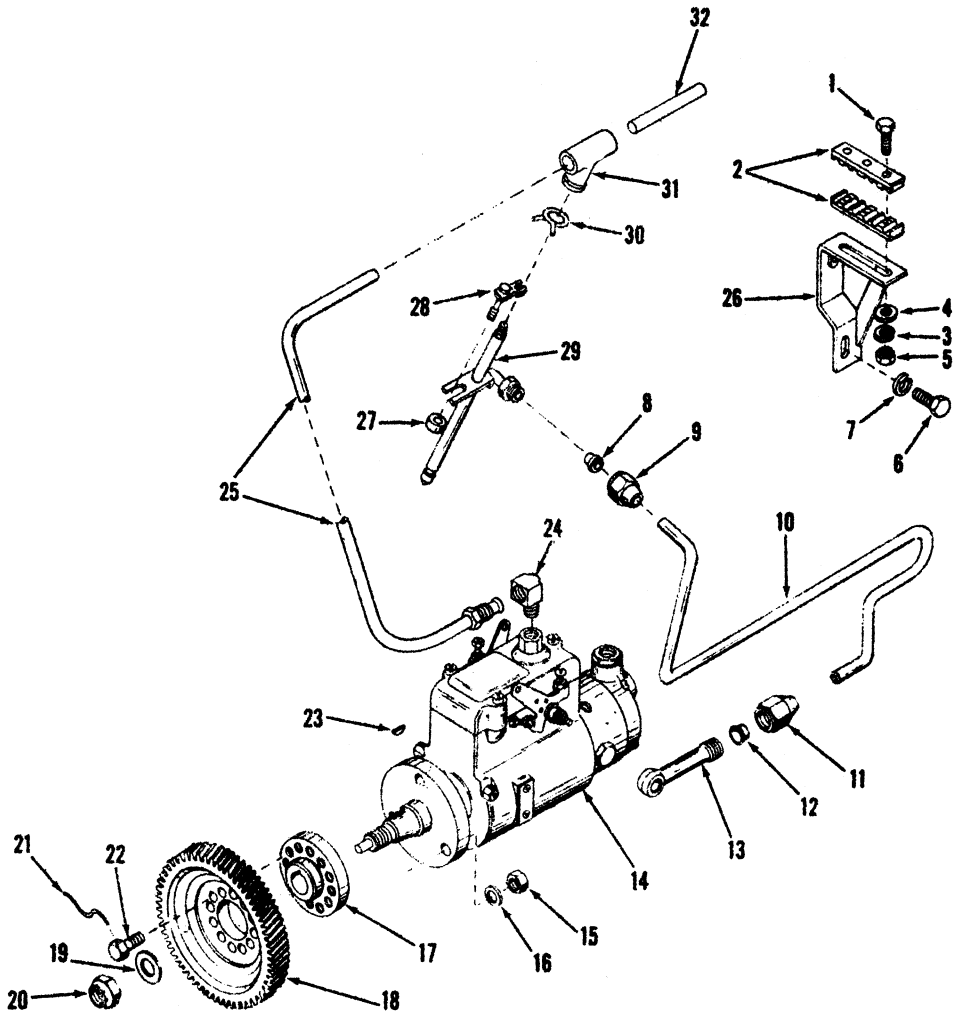

INJECTION PUMP

REF. NO.	PART NO.	DESCRIPTION	QTY. REQ.
1	P18446	Screw, Cap, Hex Head	3
	P18447	Screw, Cap, Hex Head	3
2	P18448	Clamp, Injection Tube	4
3	P18269	Washer, Lock	6
4			
5	P18449	Nut, Hex	6
6	P18450	Screw, Cap, Hex Head	1
7	P18247	Washer, Lock	1
8	P18451	Ferrule	6
9	P18452	Nut, Injector	6
10	P18453	Injection Lines Assy. (Set of 6)	1
	P18454	Tube Assy #1 (Includes 8,9,11,12)	1
	P18455	Tube Assy #2 (Includes 8,9,11,12)	1
	P18456	Tube Assy #3 (Includes 8,9,11,12)	1
	P18457	Tube Assy #4 (Includes 8,9,11,12)	1
	P18458	Tube Assy #5 (Includes 8,9,11,12)	1
	P18459	Tube Assy #6 (Includes 8,9,11,12)	1
11	P18460	Nut, Fuel Injection Tube	6
12	P18461	Ferrule	6
13	P18462	Connector, Fuel Tube	6
14	P18463	Pump Injection	1
15	P18464	Nut, Flex-Loc	3
16	P18465	Washer, Flat	3
17	P18466	Hub, Fuel Pump Gear	1
18	P18467	Gear, Fuel Pump	1
19	P18468	Washer, Flat	1
20	P18469	Nut, Flex-Loc	1
21	P18470	Wire, Lock	1
22	P18471	Screw, Cap, Hex Head	2
23	P18472	Key, Woodruff	1
24	P18407	Elbow, Inverted	1
25	P18473	Line, Leak-off, Pump to No.1 Injector	1
26	P18474	Bracket	1
27	P18475	Spacer, Injector Nozzle	6
28	P18476	Nozzle, Clamp Assy.	6
29	P18477	Nozzle Assy.	6
30	P18478	Clamp Leak-Off	6
31	P18479	Boot, Leak-Off	6
32	P18480	Leak-Off Line Assy. (Includes 30,31)	1
	P18481	Line, Leak-Off	5

PARTS NOT ILLUSTRATED

Short Block P-18251

Quick Start Kit P-17155

Refill Cylinders (Quick Start) P-17703

Complete Gasket Set P-18482

Single Piston Ring P-18483

Plastic Tube, Quick Start P-18435

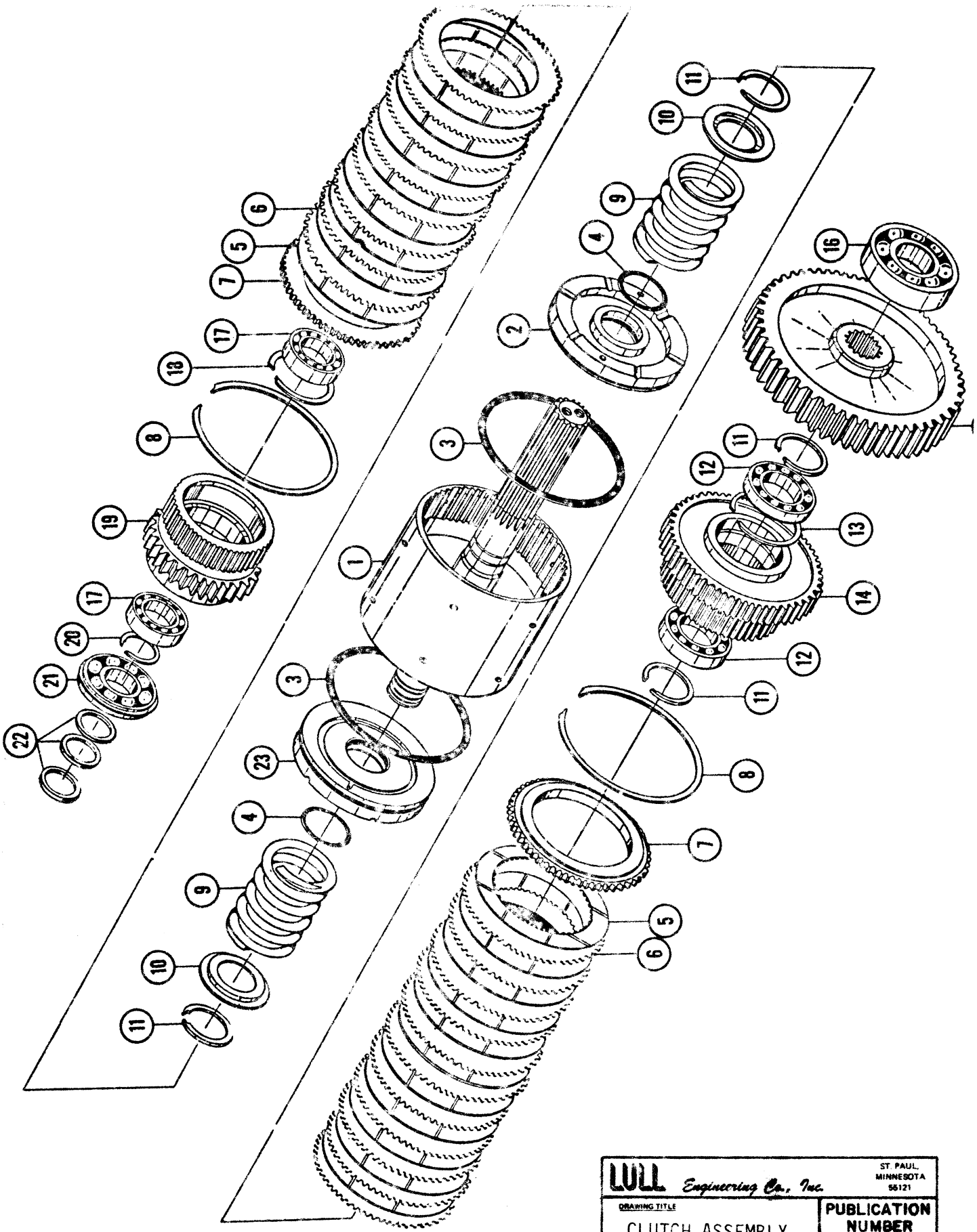

LULL Engineering Co., Inc.
ST. PAUL, MINNESOTA 55121

DRAWING TITLE
CLUTCH ASSEMBLY
3rd STAGE

PUBLICATION NUMBER
1804

ITEM	PART NO.	DESCRIPTION	QTY.
	P18628	Clutch Assembly, 3RD Stage (Spec 5800, 6037 & 7201)	
1.	P18629	Clutch, 3RD Stage	1
2.	P18605	Piston, Clutch	1
3.	P18606	Ring, Seal	2
4.	P18607	O Ring, Piston	2
5.	P18608	Plate, Clutch	19
6.	P18609	Plate, Sepeator	19
7.	P18610	Retainer, Clutch Plate	2
8.	P18611	Snap Ring	2
9.	P18612	Clutch Spring	2
10.	P18613	Retainer, Clutch Spring	2
11.	P18614	Ring, Retainer	4
12.	P18633	Bearing	2
13.	P18630	Ring	1
14.	P18631	Asm. Gear & Hub	1
15.	P18632	Gear	1
16.	P18626	Bearing, Roller	1
17.	P18615	Bearing	2
18.	P18616	Ring	1
19.	P18634	Asm. Gear & Hub	1
20.	P18618	Ring, Retainer	1
21.	P18619	Bearing, Roller	1
22.	P18620	Ring, Seal	3
23.	P18635	Piston, Clutch	1

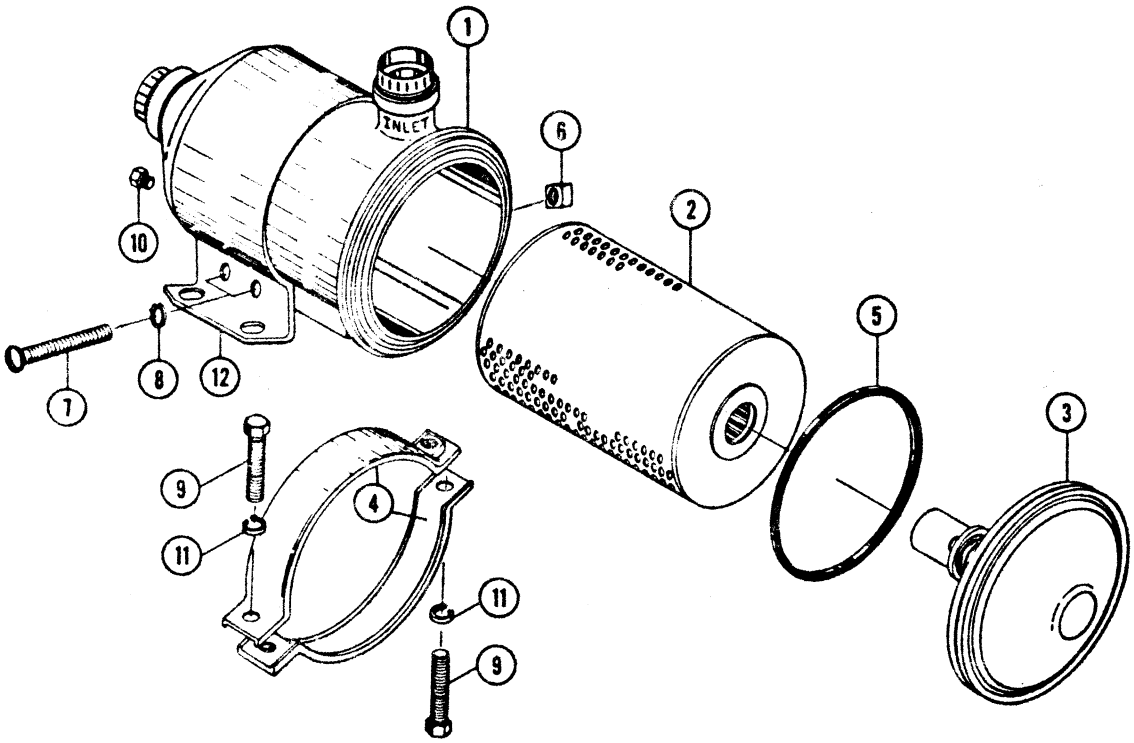

ITEM	PART NO.	DESCRIPTION	QTY.
	P17814	Remote Oil Filter Assy.* Spec 5800 ONLY	1
1	P18707	Case	1
2	P17815	Element	1
3	P18708	Cover & By-Pass Valve	1
4	P18709	Clamp Ring	1
5	P18710	Gasket	1
6	P18711	Sq. Hd. Nut	2
7	P18712	Screw	2
8	P18713	Lockwasher	2
9	P18714	Capscrew	2
10	P18715	Plug	1
11	P18716	Lockwasher	2
12	P18717	Bracket	1

* USED ON 844 S/N 101 THRU 112,114 & 115

LULL Engineering Co., Inc. ST. PAUL, MINNESOTA 55121

DRAWING TITLE
OIL FILTER &
BRAKE ASSEMBLY
SPEC 5800 ONLY

PUBLICATION NUMBER
1805

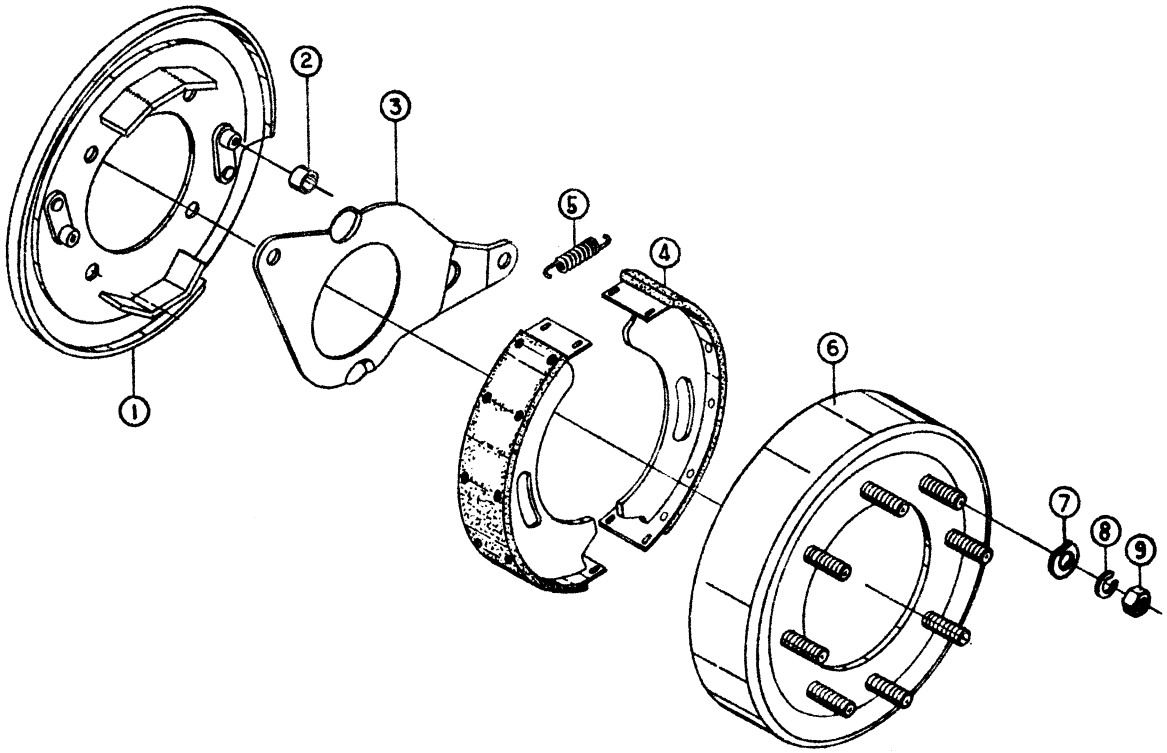

ITEM	PART NO.	DESCRIPTION	QTY.
	P18690	Brake Assembly * Spec 5800 ONLY	1
1.	P18691	Backing Plate	1
2.	P18692	Spacer	1
3.	P18693	Bell Crank	1
4.	P18694	Brake Shoe	2
5.	P18695	Return Spring	2
6.	P18696	Brake Drum	1
7.	P18697	Washer, Clipped	8
8.	Com'l	Lockwasher, 3/8" Med. Spring	8
9.	Com'l	Nut, 3/8" - 24 Hex Full	8

* USED ON 844 S/N 101 THRU 112,114 & 115

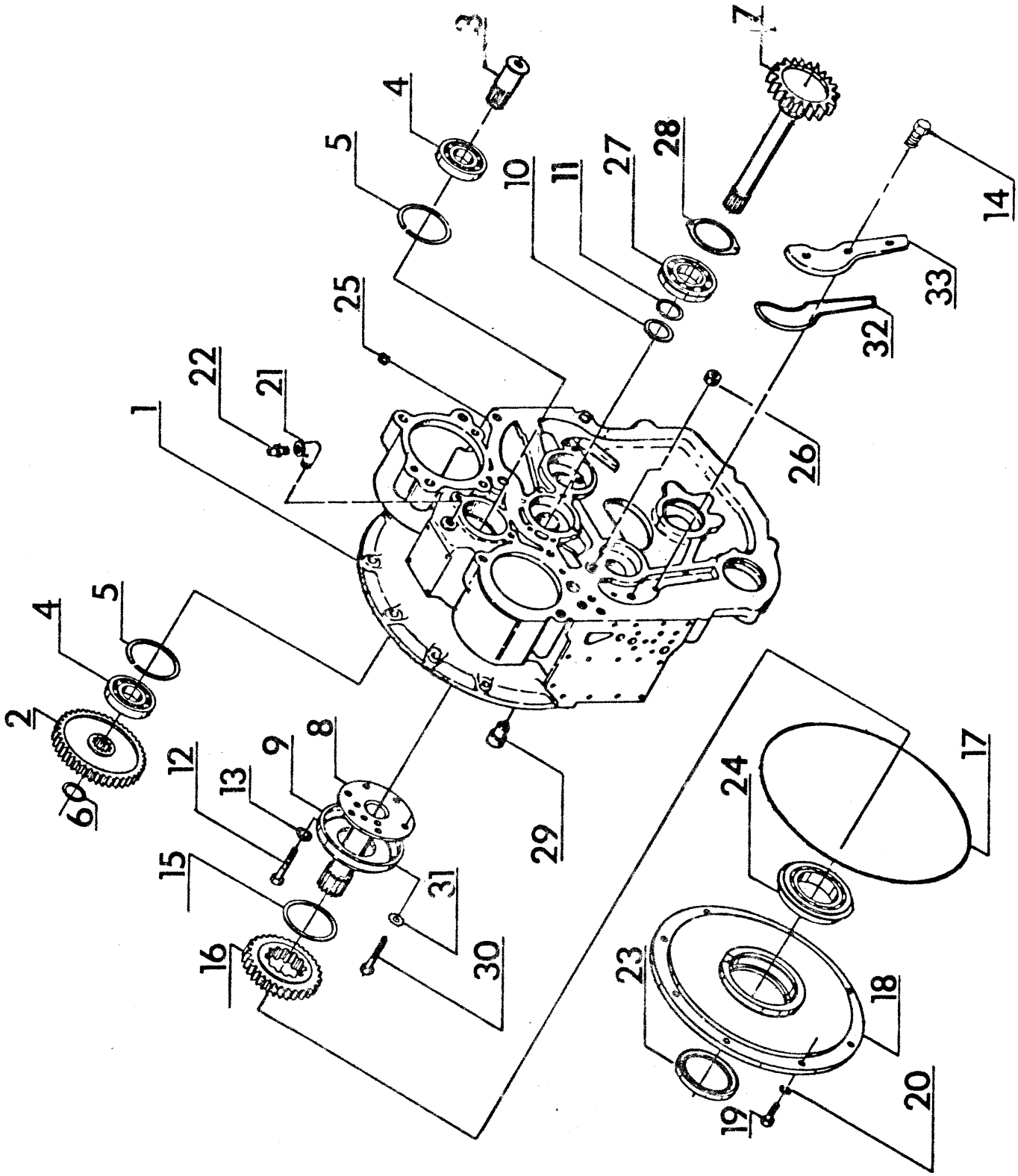

LULL Engineering Co., Inc.	ST. PAUL, MINNESOTA 55121
DRAWING TITLE FRONT COVER ASSEMBLY	PUBLICATION NUMBER 1812

ITEM	PART NO.	DESCRIPTION		QTY.
	P19433	Front Cover Assembly	Spec 6037	1
	P24531	Front Cover Assembly	Spec 8239A	1
	P24523	Front Cover Assembly	Spec 8239B & 9673	1
	P18505	Front Cover Assembly	Spec 7201 & 5800	1
	P24532	Front Cover Assembly	Spec 7711A	1
	P24524	Front Cover Assembly	Spec 7711B	1
1	P18506	Front Cover	Spec 6037 & 7201 & 5800	1
	P24521	Front Cover	Spec 7711A & 8239A	1
	P24525	Front Cover	Spec 7711B, 8239B & 9673	1
2	P18507	Gear		1
3	P18508	Shaft		1
4	P18509	Bearing		2
5	P18510	Ring Retainer		2
6	P18511	Ring Retainer		1
7	P18512	Input Shaft	Spec 5800, 7201, 8239 & 9673	1
	P19754	Input Shaft	Spec 6037 & 7711A	1
	P24537	Input Shaft	Spec 7711B	1
8	P18516	Tube		1
	P19443	Tube	Spec 6037 & 7711A ONLY	1
9	P18517	Cover Plate		1
10	P19755	Ring Seal		1
11	P18514	Ring		1
12	P18518	Capscrew		6
13	P18519	Lockwasher		6
14	P19758	Capscrew		1
15	P19444	Washer Thrust Pump		1
16	P18524	Input Hub Gear		1
17	P18525	Gasket	Spec 6037, 7201 & 5800	1
	P24582	Gasket, Plastic Strip	Spec 7711, 8239 & 9673	1
18	P18526	Bearing Retainer		1
19	P18529	Capscrew		7
20	P18530	Lockwasher		7
21	P18531	Elbow		1
22	P18532	Breather		1
	P12034	Breather	Spec 7711, 8239, & 9673	1
23	P18528	Oil Seal		1
24	P18527	Bearing		1
25	P18672	Plug		1
26	P19759	Plug		1
27	P18513	Bearing		1
28	P18522	Bearing Retainer	Spec 7711A & 8239A ONLY	1
	P24579	Bearing Retainer		1
29	P19760	Regulator Valve		1
30	P18520	Capscrew		4
31	P18521	Starwasher		4
32	P19756	O-Ring		1
33	P19757	Oil Passage Cover		1

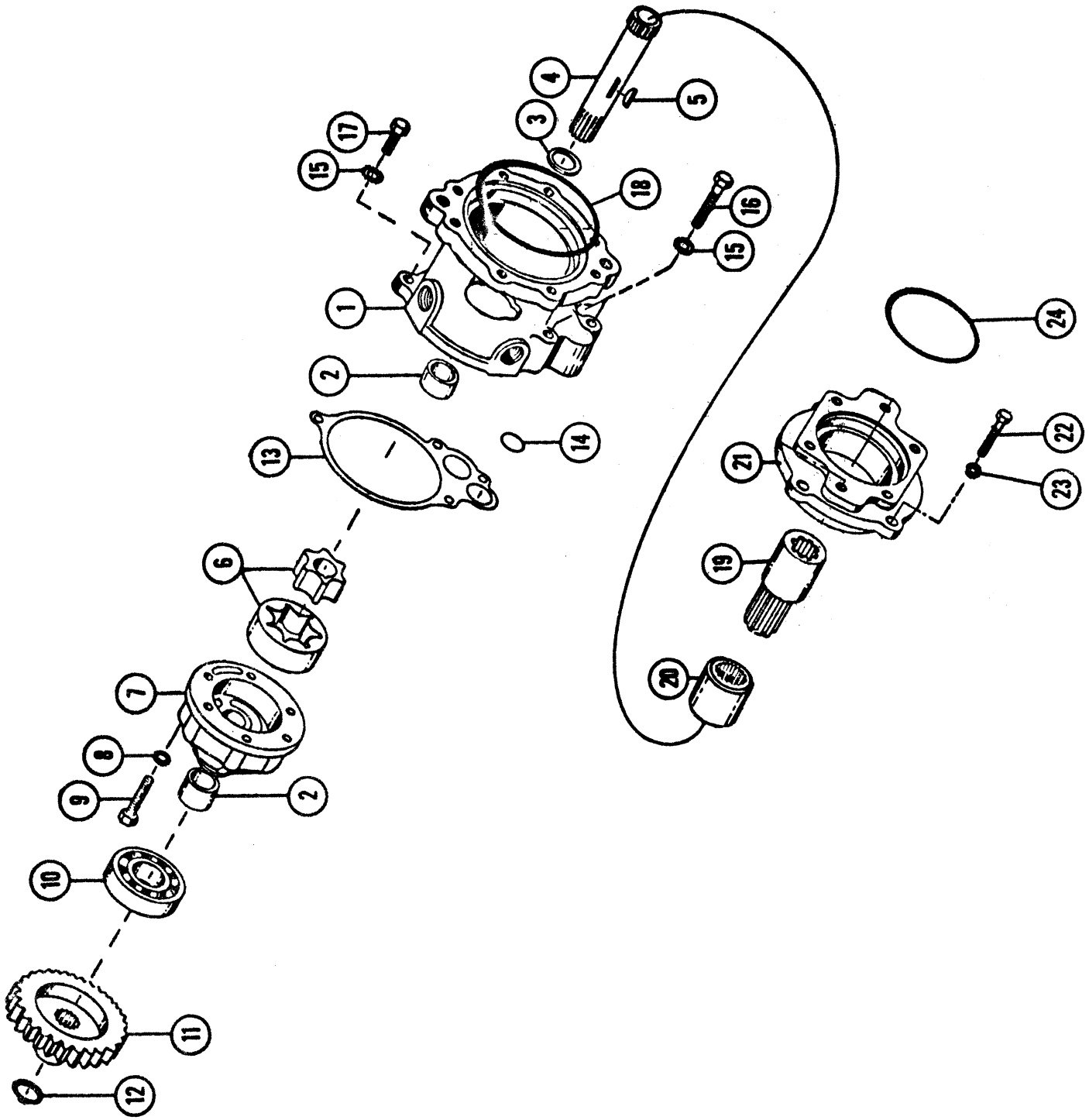

LULL Engineering Co., Inc.
ST. PAUL, MINNESOTA 55121

DRAWING TITLE
PUMP ASSEMBLY

PUBLICATION NUMBER
1813

ITEM	PART NO.	DESCRIPTION	QTY.
	P18004	Pump Assembly (Use P18581 For Spec 5800)	1
1	P18582	Housing	1
2	P19826	Bearing (Use P18583 For Spec 5800)	2
3	P18584	Thrust Washer	1
4	P19827	Drive Shaft (Use P18585 For Spec 5800)	1
5	P19828	Key, Woodruff (Use P18586 For Spec 5800)	1
6	P18587	Gerotor	1
7	P18588	Pump Retainer	1
8	P18702	Starwasher, Ext. 5/16"	6
9	P18589	Capscrew	6
10	P18590	Bearing	1
11	P18591	Gear	1
12	P18592	Retaining Ring	1
13	P18593	Gasket	1
14	P18594	O-Ring	1
15	P18703	Starwasher, 3/8"	4
16	P18595	Capscrew	3
17	P18596	Capscrew	1
18	P18597	O-Ring	1
19	P18598	Adaptor Sleeve, "B"	1
20	P18599	Sleeve Spacer	1
21	P18600	Adaptoe Plate	1
22	P18573	Capscrew	4
23	P18572	Lockwasher	4
24	P18602	O-Ring	1

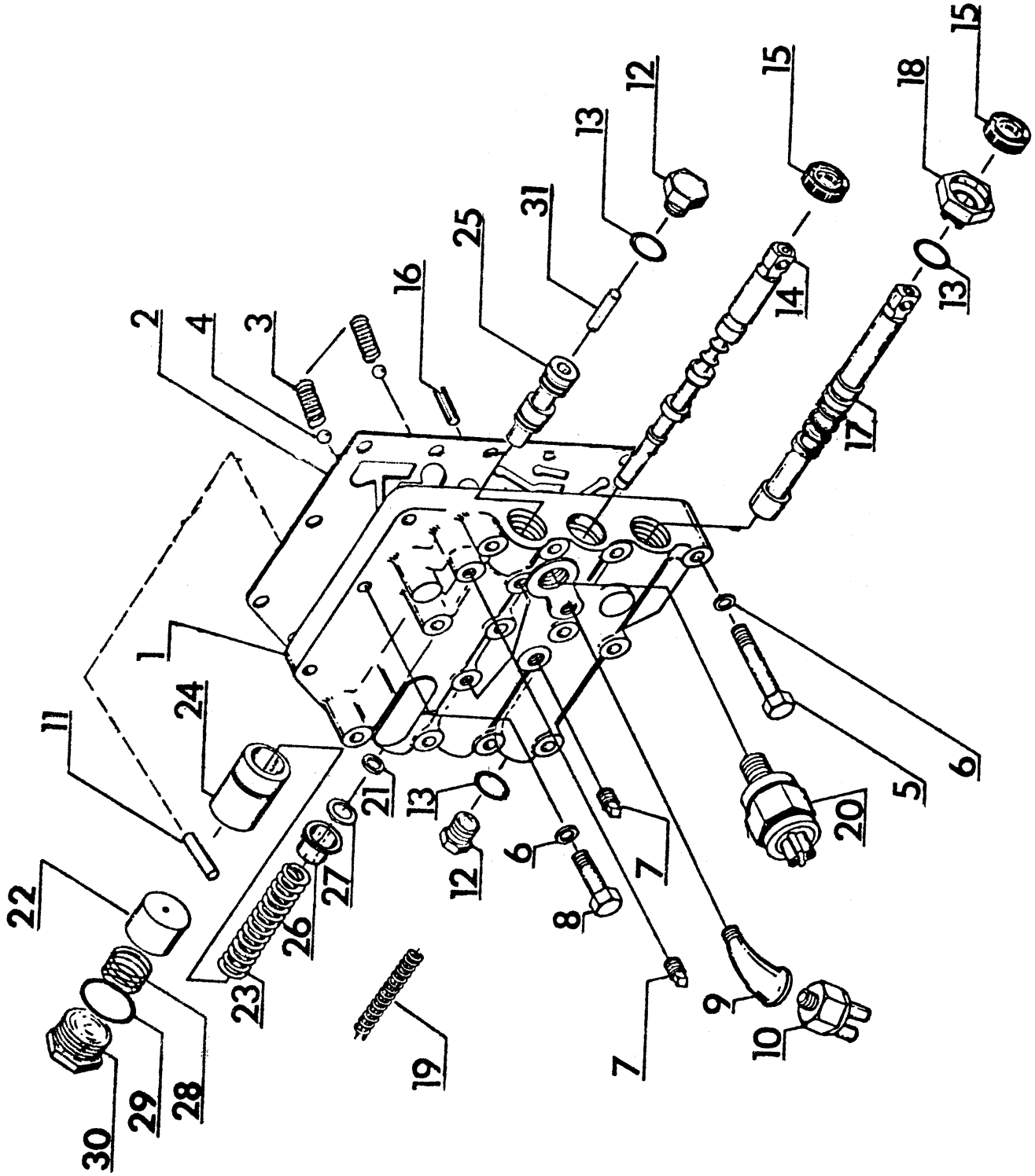

LULL Engineering Co., Inc.	ST. PAUL, MINNESOTA 55121
DRAWING TITLE VALVE CONTROL ASSEMBLY	PUBLICATION NUMBER 1814

ITEM	PART NO.	DESCRIPTION	QTY.
	P18653	Valve Control Assy. Spec 5800, 6037, 7201, 7711A, 8239A	1
	P24530	Valve Control Assy. Spec 7711B, 8239B, 9673	1
1	P18654	Body, Control Valve,Spec 7711A, 8239A,6037,7201,5800	1
	P24529	Body, Control Valve, Spec 7711B,8239B,9673	1
2	P18675	Gasket, Valve Body	1
3	P18676	Spring, Detent	2
4	P18677	Ball	2
5	P22796	Capscrew	12
6	P22799	Flat Washer	15
7	P18672	Plug, Pipe	4
8	P18518	Capscrew	3
9	P19825	45° Elbow, Street	1
10	P19105	Switch, Reverse Alar m - See Note	1
11	P19822	Pin, Use P18657, Snap Ring For Spec 5800	1
12	P18665	Plug	2
13	P18666	O-Ring	3
14	P19823	Stem, Forward - Reverse	1
15	P18668	Oil Seal	2
16	P18669	Roll Pin	1
17	P19824	Stem, Spec 5800,6037 & 7201	1
	P24522	Stem, Spec 7711, 8239 & 9673	1
18	P18671	Plug	1
19	P18662	Spring, Regulator-Spec 7711A,8239A,6037,7201&5800 ONLY	1
20	P18673	Switch, Neutral Safety	1
21	P18674	Spacer, Spring	A/R
22	P18658	Valve, Pump	1
23	P18656	Spring, Accumulator	1
24	P18655	Valve Modulator, Spec 7711A,8239A,6037,7201,5800	1
	P24527	Valve Modulator, Spec 7711B, 8239B, 9673	1
25	P18663	Valve, Regulator, Spec 7711A, 8239A, 6037, 7201, 5800	1
	P24528	Valve, Regulator, Spec 7711B, 8239B, 9673	1
26	P24526	Cap, Regulator, Spec 7711B, 8239B, 9673	1
27	P24599	Washer, Spec 7711B, 8239B, 9673	1
28	P18659	Spring, Pump Valve	1
29	P18661	O-Ring	1
30	P18660	Plug, Pump Valve	1
31	P18664	Dowel Pin	1

NOTE: There is no port on valve for reverse alarm switch on transmission Spec 5800.

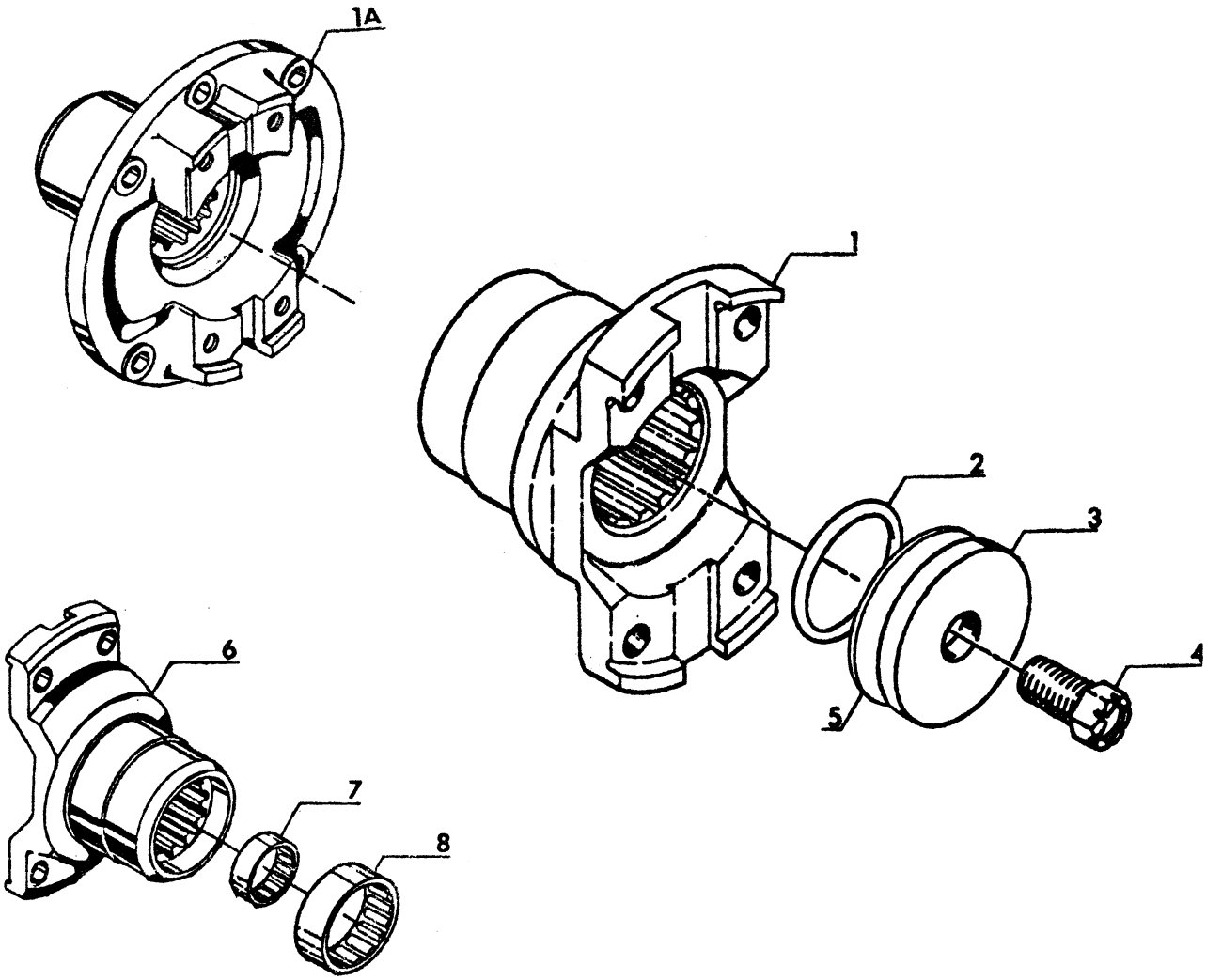

ITEM	PART NO.	DESCRIPTION			QTY
	P18683	Yoke Group Assembly	Spec 5800	6037 & 7201	1
	P20426	Yoke Group Assembly	Spec 7711	8239 & 9673	1
	P25409	Yoke Group Assembly	Spec 9673	only	1
1	P18684	Yoke Flange, Front			1
1A	P25410	Yoke Flange, Front	Spec 9673	only	1
2	P18685	O-Ring			1
3	P18686	Washer	Spec 5800	6037 & 7201	
	P20427	Washer	Spec 7711	8239 & 9673	1
4	P20428	Bolt, Special			1
5	P19820	Shim Package (not shown)			1
6	P20429	Yoke Flange, Rear			1
7	P24457	Bearing			1
8	P24458	Bearing			

YOKE & DRIVE
PLATE ASSEMBLY

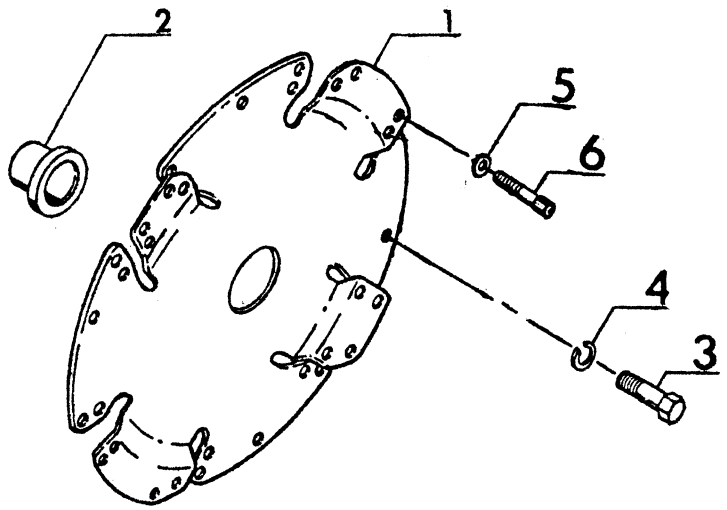

ITEM	PART NO.	DESCRIPTION	QTY.
		Drive Plate Assembly (Incl. Item 2)	
		CHRYSLER ENGINES	
1	P20968	Spec 5800, 7201 & 8239	1
	P20969	Spec 6037 & 7711	1
		WAUKESHA ENGINES	
	P20968	Spec 5800	1
	P19278	Spec 6037 & 7711A	1
	P22802	Spec 7711B & 9673	1
		DETROIT ENGINES	
	P19441	Spec 7201, 8239 & 9673	1
		DEUTZ ENGINES	
	P19278	Spec 7711A	1
	P22802	Spec 7711B & 9673	
		DEERE ENGINES	
	P20968	Spec 8239	1
	P22647	Spec 9673	1
2	(A)	Sleeve Hub	1
3	P18536	Capscrew, 3/8-16 NC x 3/4	8
4	P18530	Lockwasher, 3/8 Medium Spring	8
5	P18537	Washer, Half Round	8
	P22799	Washer, Flat	8
6	P18538(B)	Capscrew, Socket Hd., 5/16-24 NF x 2 3/4 (Nylock)	8
	P19438(C)	Capscrew, Socket Hd., 5/16-24 NF x 1 1/4 (Nylock)	8

ITEMS 3 THRU 6 USED TO BOLT DRIVE PLATE TO CONVERTER

NOTES:

A) CONSULT FACTORY

B) USED WITH 12 3/4" CONVERTERS

C) USED WITH 11 3/4" CONVERTERS

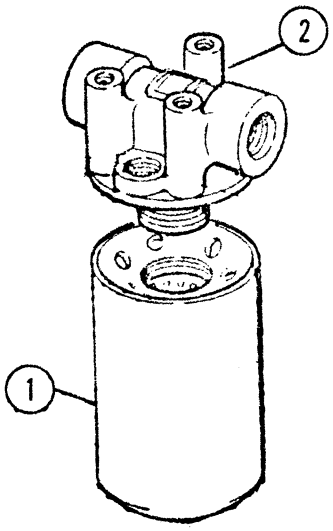

ITEM	PART NO.	DESCRIPTION	QTY.
	P19132	Remote Filter & Base Assembly	1
1.	P19133	Filter	1
2.	P19821	Base	1

LULL Engineering Co., Inc.
ST PAUL, MINNESOTA 55121

DRAWING TITLE
REMOTE FILTER & COVER PLATE ASS'Y

PUBLICATION NUMBER
1816

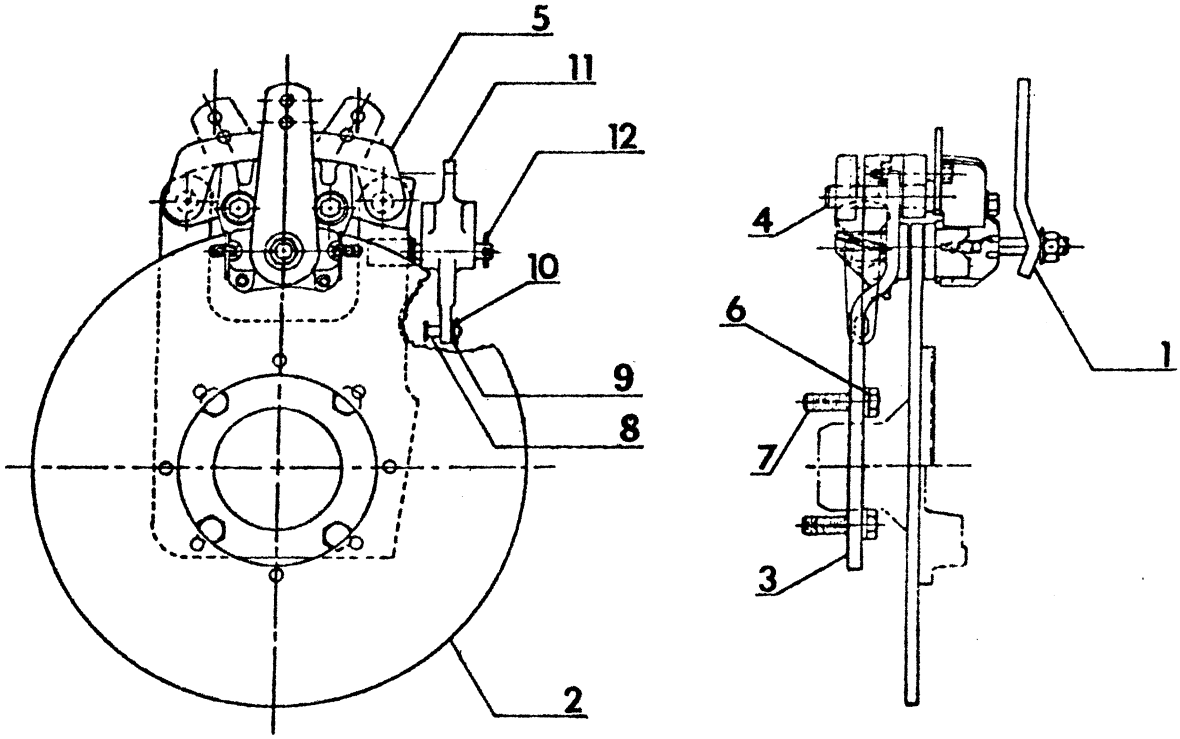

ITEM	PART NO.	DESCRIPTION	QTY.
1	P24539	Brake Caliper W/Pads	1
2	P25075	Disc. Brake	1
3	P25402	Mounting Bracket	1
4	P25424	Pin	2
5	P25403	Retainer, Pin	1
6	P18572	Lockwasher	4
7	P18573	Capscrew	4
8	P25423	Clevis Pin	1
9	P25427	Flatwasher	1
10	P25425	Cotter Pin	1
11	P25404	Lever, Disconnect	1
12	P25426	Cotter Pin	1
13	P24602	Spring, Short	2
14	P24601	Spring, Long	1
15	P24600	Brake Pad	2

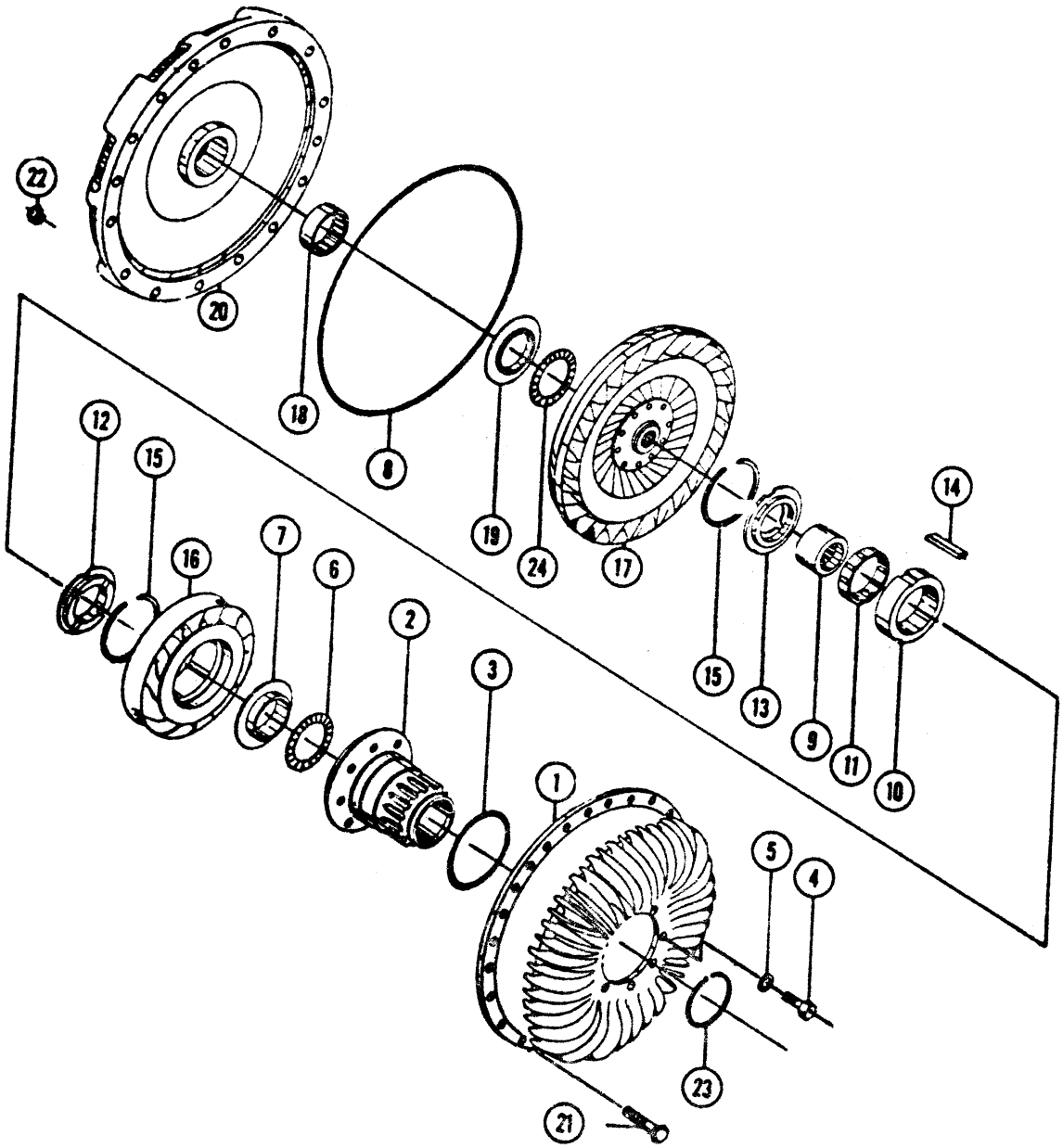

LULL Engineering Co., Inc.
ST. PAUL, MINNESOTA 55121

DRAWING TITLE
CONVERTER ASSEMBLY

PUBLICATION NUMBER
1817

ITEM	PART NO.	DESCRIPTION		QTY.
	P17773	Converter Assembly	Spec 5800	1
	P19439	Converter Assembly	Spec 7201	1
	P20647	Converter Assembly	Spec 8239A & 8239B Spec 9673 (Detroit Only)	1
1	P18539	Impeller		1
2	P18540	Hub		1
	P20734	Hub (Use w/P20647 Assy. Only)		1
3	P18541	O-Ring		1
4	P18542	Capscrew		12
5	P18543	Seal Washer		12
6	P18544	Bearing		2
7	P18545	Thrust Washer, Rear		1
8	P18546	O-Ring Gasket		1
9	P18547	Inner Race Clutch		1
10	P18548	Outer Race Clutch		1
11	P18549	Clutch Sprag		1
12	P18550	Clutch Retainer, Rear		1
	P20736	Clutch Retainer, Rear (Use W/P20647 Assy.Only)		1
13	P18551	Clutch Retainer, Front		1
14	P18552	Key, Square		4
15	P18553	Snap Ring		2
16	P18554	Stator		1
17	P19762	Turbine		1
18	P18556	Bearing		1
19	P18557	Thrust Washer		1
20	P18558	Front Cover (Use W/P17773 Assy. Only)		1
	P19761	Front Cover		1
21	P18559	Capscrew		16
22	P18560	Flanged Nut		16
23	P18561	Ring Seal (Use W/P17773 Assy. ONLY)		1
	P19466	Ring Seal		1
24	P20742	Bearing		1

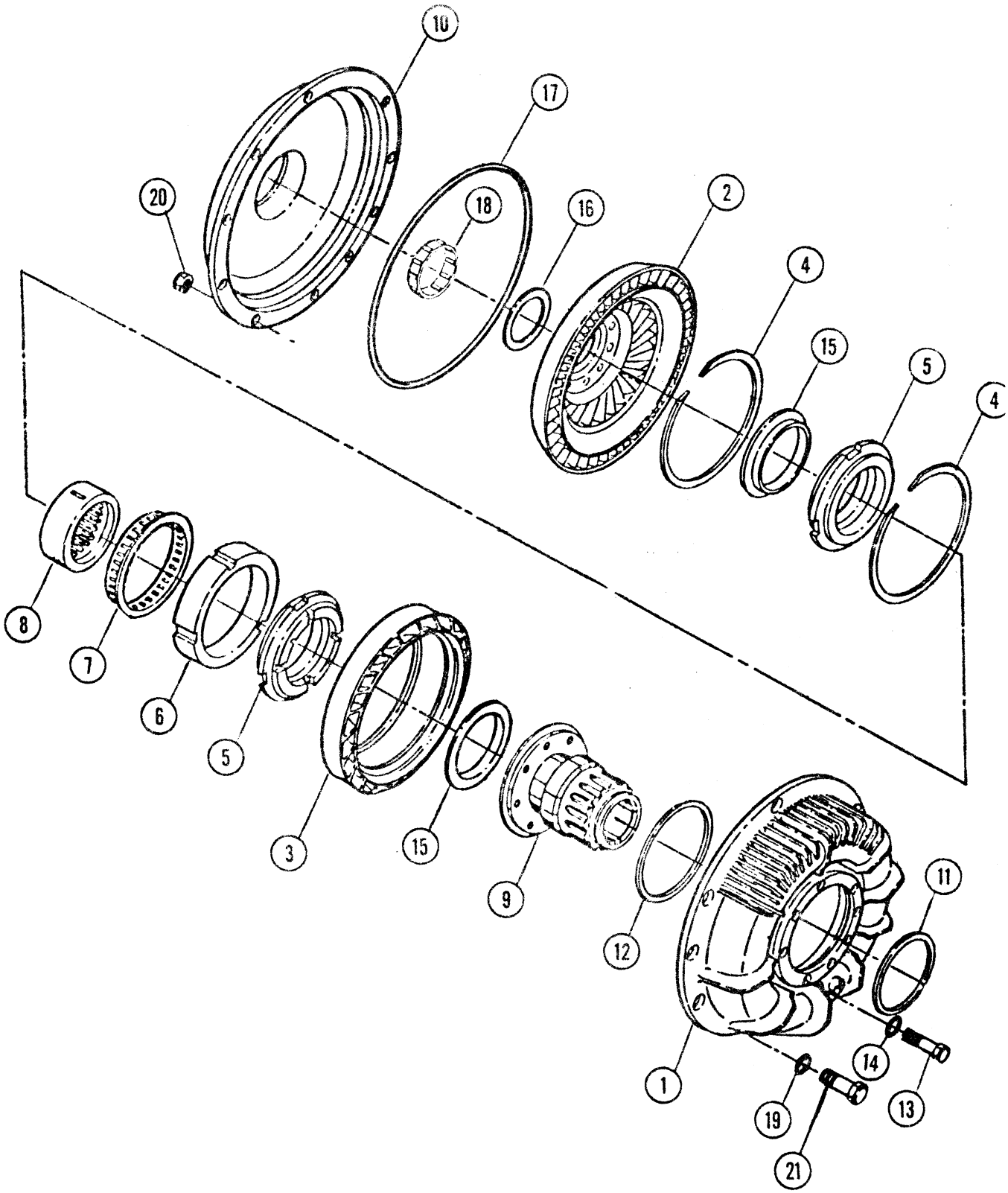

LULL Engineering Co., Inc.
ST. PAUL, MINNESOTA 55121

DRAWING TITLE
CONVERTER ASSEMBLY

PUBLICATION NUMBER
1818

ITEM	PART NO.	DESCRIPTION		QTY.
	P19434	Converter Assembly	Spec 6037 & 7711A	1
1	P19454	Impeller		1
2	P19457	Turbine		1
3	P19450	Stator		1
4	P19451	Retaining Ring		2
5	P19449	Retainer, Stator		2
6	P19446	Outer Race		1
7	P19447	Clutch Sprag		1
8	P19448	Inner Race		1
9	P19452	Hub, Impeller		1
10	P19459	Converter Cover		1
11	P19466	Seal Ring		1
12	P19453	Seal Ring		1
13	P19455	Capscrew		8
14	P19456	Lockwasher		8
15	P19458	Thrust Washer		2
16	P20649	Thrust Washer		1
17	P19460	O-Ring		1
18	P19467	Bearing		1
19	P19464	Washer		10
20	P19462	Lock Nut		10
21	P19461	Capscrew		10

FUNK TRANSMISSION BREAKDOWN

Spec #7711, 8239 & 9673 Transmission Variations

844 S/N 440, 443 THRU
(Except S/N 626, 632, 634, 636, 638, 639, 642, 653, 660 & 661)

400B S/N 2157 THRU

INDEX OF PARTS

ASSEMBLY	PUBLICATION NO.
Main Case Assembly	1807
Output Group Assembly	1808
Output Retainer Assembly	1808
Clutch Assembly, 1st Stage	1809
Clutch Assembly, 2nd Stage	1810
Clutch Assembly, 3rd Stage	1811
Front Cover Assembly	1812
Pump Assembly	1813
Valve Control Assembly	1814
Yoke Group Assembly	1815
Drive Plate Assembly	1815
Remote Oil Filter Assembly	1816
Parking Brake Assembly - Spec 9673C	1816
Conver Assembly - Spec 8239 & 9673	1817
Conver Assembly - Spec 7711A	1818
Converter Assembly - Spec 7711B & 9673	1819
Converter Assembly - Spec 9673C	1819-1

LULL Engineering Co., Inc. ST. PAUL, MINNESOTA 55121

DRAWING TITLE
INDEX OF PARTS
FUNK TRANSMISSION

PUBLICATION NUMBER
1806

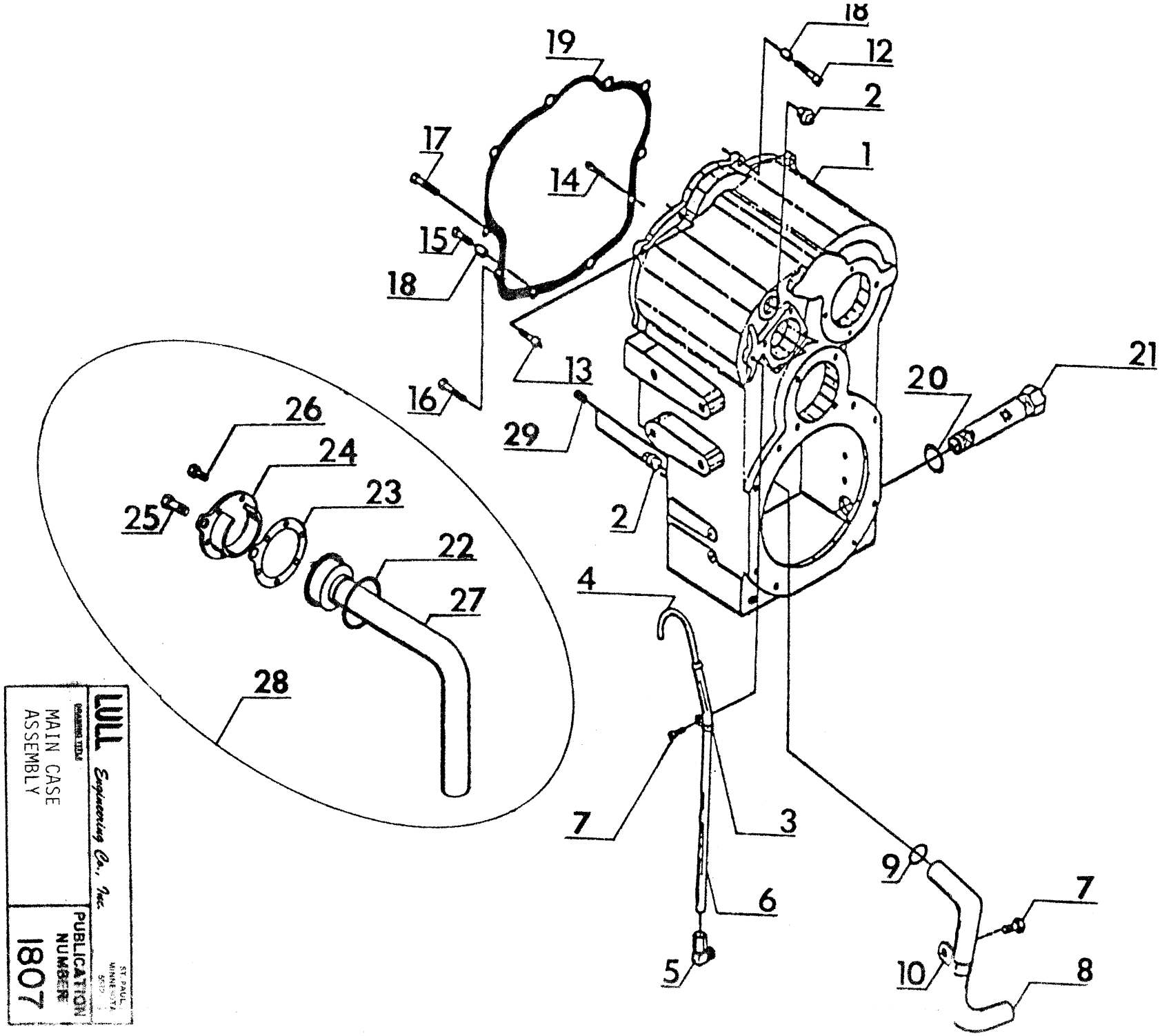

LULL Engineering Co., Inc.

DRAWING TITLE: MAIN CASE ASSEMBLY

PUBLICATION NUMBER: 1807

ST. PAUL, MINNESOTA

ITEM	PART NO.	DESCRIPTION		QTY
	P20860	Main Case Group Assy.	Spec 7711A & 8239A	1
	P24572	Main Case Group Assy.	Spec 7711B & 8239B & 9673	1
1	P20861	Main Case	Spec 7711A & 8239A	1
	P24571	Main Case	Spec 7711B & 8239B & 9673	1
2	P18565	Pipe Plug		2
3	P24542	Clamp, Dipstick	Spec 7711B & 8239B & 9673	1
4	P24544	Dipstick	Spec 7711B & 8239B & 9673	1
5	P24540	90° Elbow, Male	Spec 7711B & 8239B & 9673	1
6	P24545	Tube, Dipstick	Spec 7711B & 8239B & 9673	1
7	P22788	Capscrew	Spec 7711B & 8239B & 9673	2
8	P24568	Tube, Suction	Spec 7711B & 8239B & 9673	1
9	P24583	Retaining Ring	Spec 7711B & 8239B & 9673	1
10	P24543	Clamp, Tube	Spec 7711B & 8239B & 9673	1
11				1
				1
12	P19790	Capscrew	Spec 7711A & 8239A	1
	P24595	Capscrew	Spec 7711B & 8239B & 9673	1
13	P19791	Capscrew	Spec 7711A & 8239A	3
	P24596	Capscrew	Spec 7711B & 8239B & 9673	3
14	P18573	Capscrew		3
15	P18571	Capscrew		1
16	P22792	Capscrew		1
17	P18580	Capscrew		1
18	P18570	Locating Bushing		2
19	P18568	Gasket, Main Case		1
20	P20863	Gasket, Suction Screen		1
21	P20862	Suction Screen	Spec 7711A & 8239A	1
	P24534	Suction Screen	Spec 7711B & 8239B & 9673	1
22	P18649	O-Ring, Strainer	Spec 7711A & 8239A	1
23	P18651	Gasket, Strainer	Spec 7711A & 8239A	1
24	P24581	Cover, Strainer	Spec 7711A & 8239A	1
25	P22793	Capscrew	Spec 7711A & 8239A	1
26	P18542	Capscrew	Spec 7711A & 8239A	6
27	P24580	Tube, Suction	Spec 7711A & 8239A	1
28	P20864	Oil Strainer Assembly	Spec 7711A & 8239A	1
29	P18567	Pipe Plug		2

SPEC 5800, 6037 & 7201

FUNK TRANSMISSION-INDEX

844 S/N 101 THRU 439, 441, 442, 626, 632
634, 636, 638, 639, 642, 653, 660 & 661

400B S/N 2001 THRU 2156

4D4B S/N 1101 THRU

ASSEMBLY	PUBLICATION NO.
Main Case Assembly	1800
Oil Strainer Assembly	1800-A
Output Group Assembly	1801
Output Retainer Assembly	1801-A
Clutch Assembly, 1st Stage	1802
Clutch Assembly, 2nd Stage	1803
Clutch Assembly, 3rd Stage	1804
Remote Oil Filter - Spec 5800 ONLY	1805
Brake Assembly - Spec 5800 ONLY	1805-A
Front Cover Assembly	1812
Pump Assembly	1813
Valve Control Assembly	1814
Yoke Group Assembly	1815
Drive Plate Assembly	1815-A
Remote Oil Filter Assembly	1816
Converter Assembly - Spec 5800 & 7201	1817
Converter Assembly - Spec 6037	1818

LULL Engineering Co., Inc. ST. PAUL, MINNESOTA 55121

DRAWING TITLE
INDEX OF PARTS
FUNK TRANSMISSION

PUBLICATION NUMBER
1799

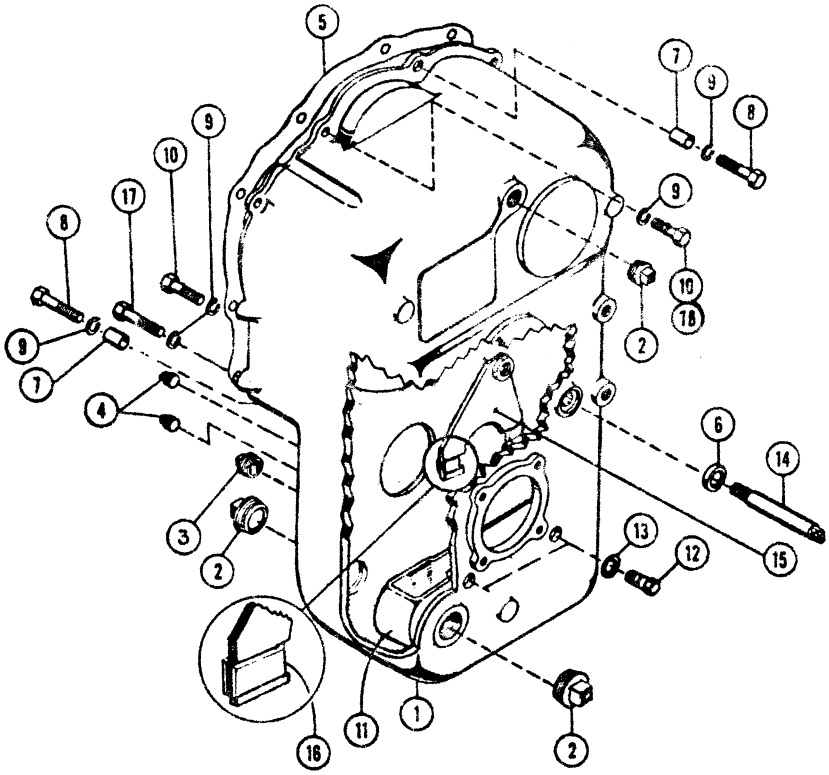

ITEM	PART NO.	DESCRIPTION	QTY.
	P18563	Main Case Assembly Spec 5800, 6037 & 7201	1
1.	P18564	Main Case	1
2.	P18565	Plug	3
3.	P18566	Drain Plug (Magnet)	1
4.	P18567	Plug	2
5.	P18568	Gasket	1
6.	P18569	Seal	1
7.	P18570	Bushing	2
8.	P18571	Capscrew	1
9.	P18572	Lockwasher	10
10.	P18573	Capscrew	4
11.	P19789	Oil Trough	1
12.	P19790	Capscrew	1
13.	P18576	Washer	2
14.	P18577	Shaft	1
15.	P18578	Fork	1
16.	P18579	Clip	2
17.	P18580	Capscrew	1
18.	P19791	Capscrew	3

LULL Engineering Co., Inc.
ST. PAUL, MINNESOTA 55121

DRAWING TITLE
MAIN CASE & OIL STRAINER ASSEMBLY

PUBLICATION NUMBER
1800

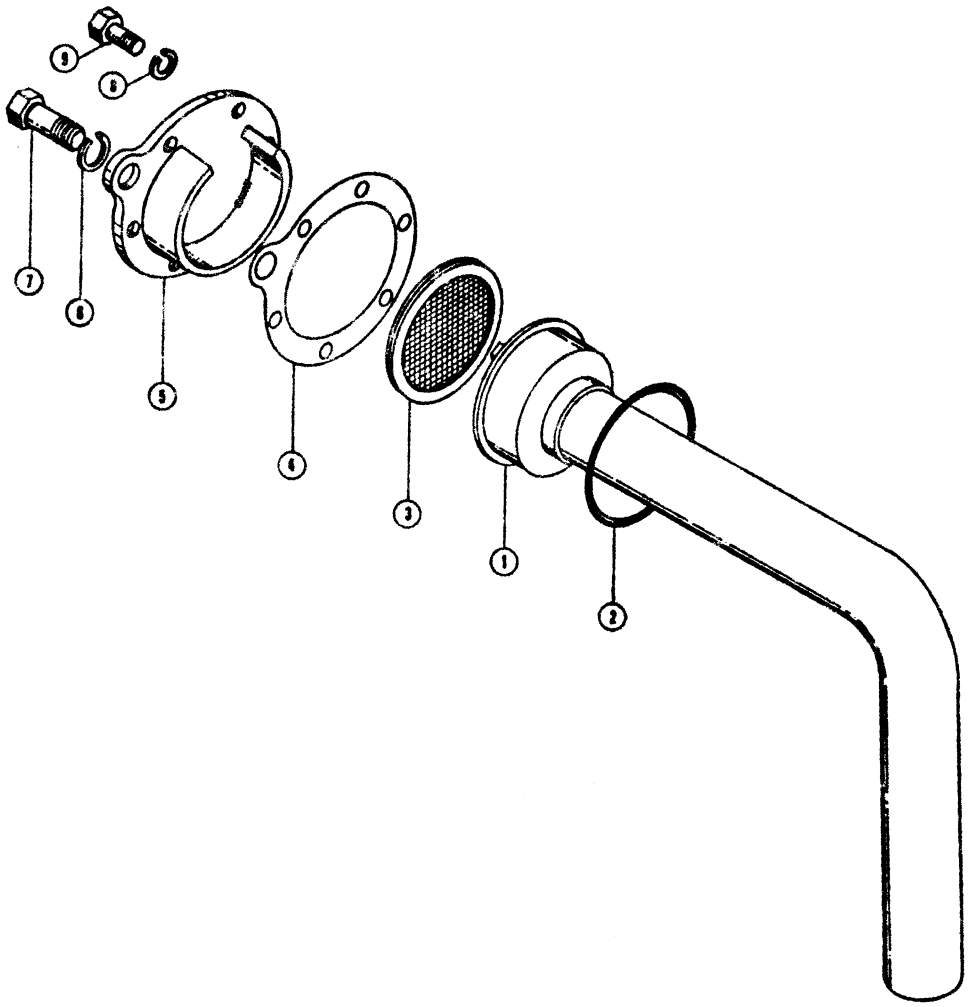

ITEM	PART NO.	DESCRIPTION	QTY.
	P18647	Oil Strainer Assembly Spec 5800, 6037 & 7201	1
1.	P18648	Oil Strainer	1
2.	P18649	O-Ring	1
3.	P18650	Screen	1
4.	P18651	Gasket	1
5.	P18652	Oil Strainer Cover	1
6.	P18572	Lockwasher, 1/2"	1
7.	P22793	Capscrew, 1/2" - 13 x 2-1/2" Lg.	1
8.	P18713	Lockwasher, 5/16"	6
9.	P18542	Capscrew, 5/16" - 18 x 7/8" Lg.	6

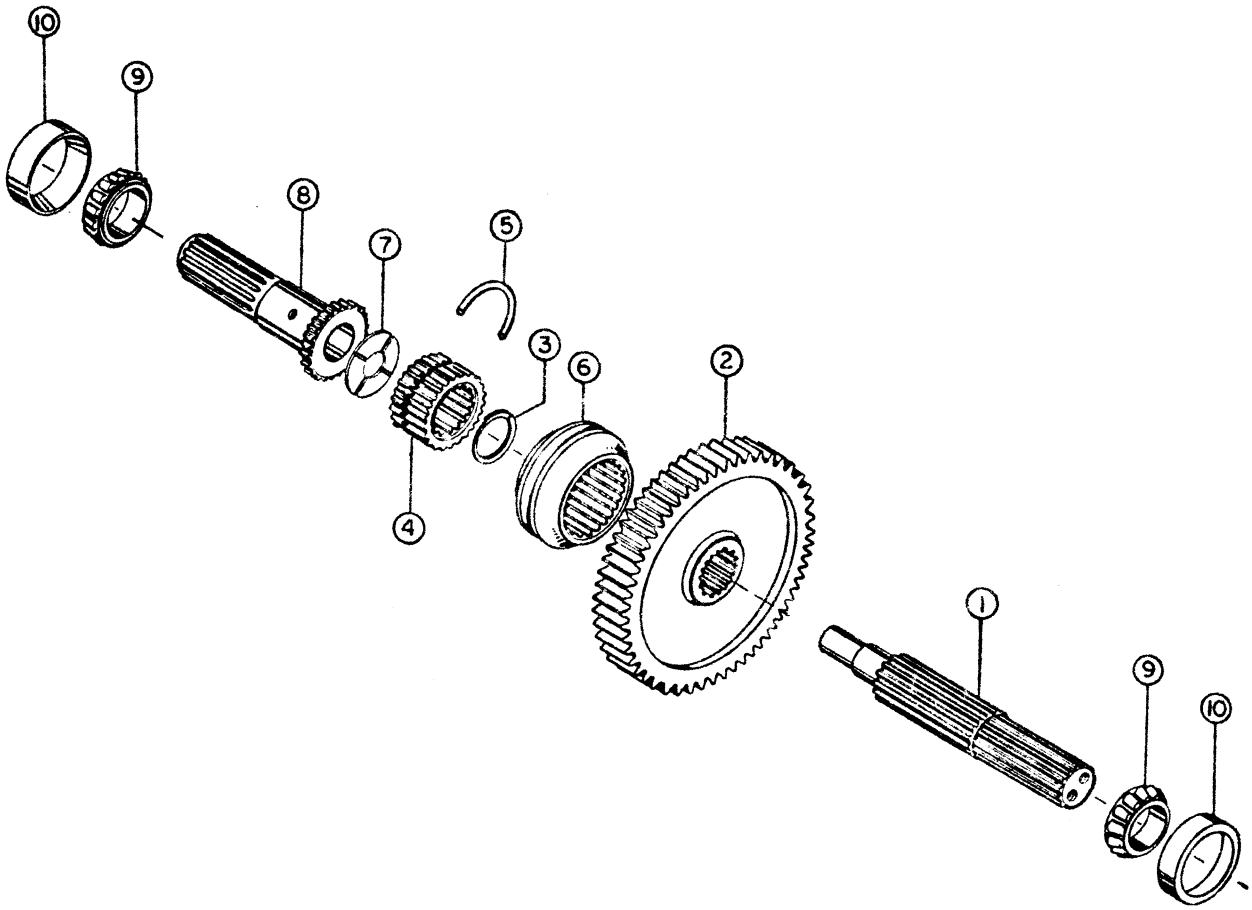

ITEM	PART NO.	DESCRIPTION	QTY.
	P18636	Output Group Assembly Spec 5800, 6037 & 7201	1
1.	P18637	Asm. Shaft	1
2.	P18638	Gear, Output	1
3.	P18639	Ring, Retainer	1
4.	P18640	Hub Disc.	1
5.	P18641	Ring, Detent	1
6.	P18642	Collar, Shifting	1
7.	P18643	Washer, Thrust	1
8.	P18644	Asm. Shaft	1
9.	P18645	Cone, Bearing	2
10.	P18646	Cup, Bearing	2

LULL Engineering Co., Inc. ST. PAUL, MINNESOTA 55121

DRAWING TITLE
OUTPUT & OUTPUT RETAINER ASSEMBLY

PUBLICATION NUMBER
1801

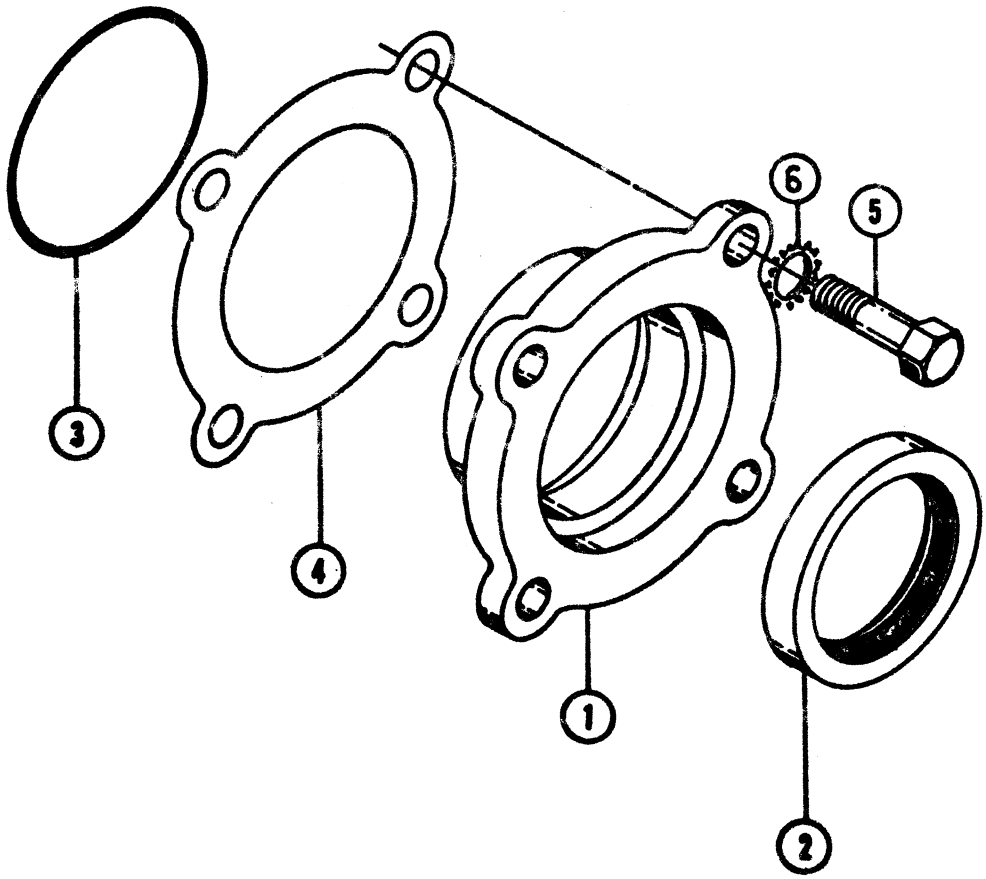

ITEM	PART NO.	DESCRIPTION	QTY.
	P18678	Retainer Assembly, Output Group	1
1.	P18679	Bearing Retainer	1
2.	P18680	Oil Seal	1
3.	P18681	O-Ring	1
4.	P18682	Shim, Bearing Retainer	1
5.	Com'l	Capscrew, Hex., 1/2" - 13 x 1-1/4" Long	4
6.	Com'l	Star Washer, Ext. 1/2"	4

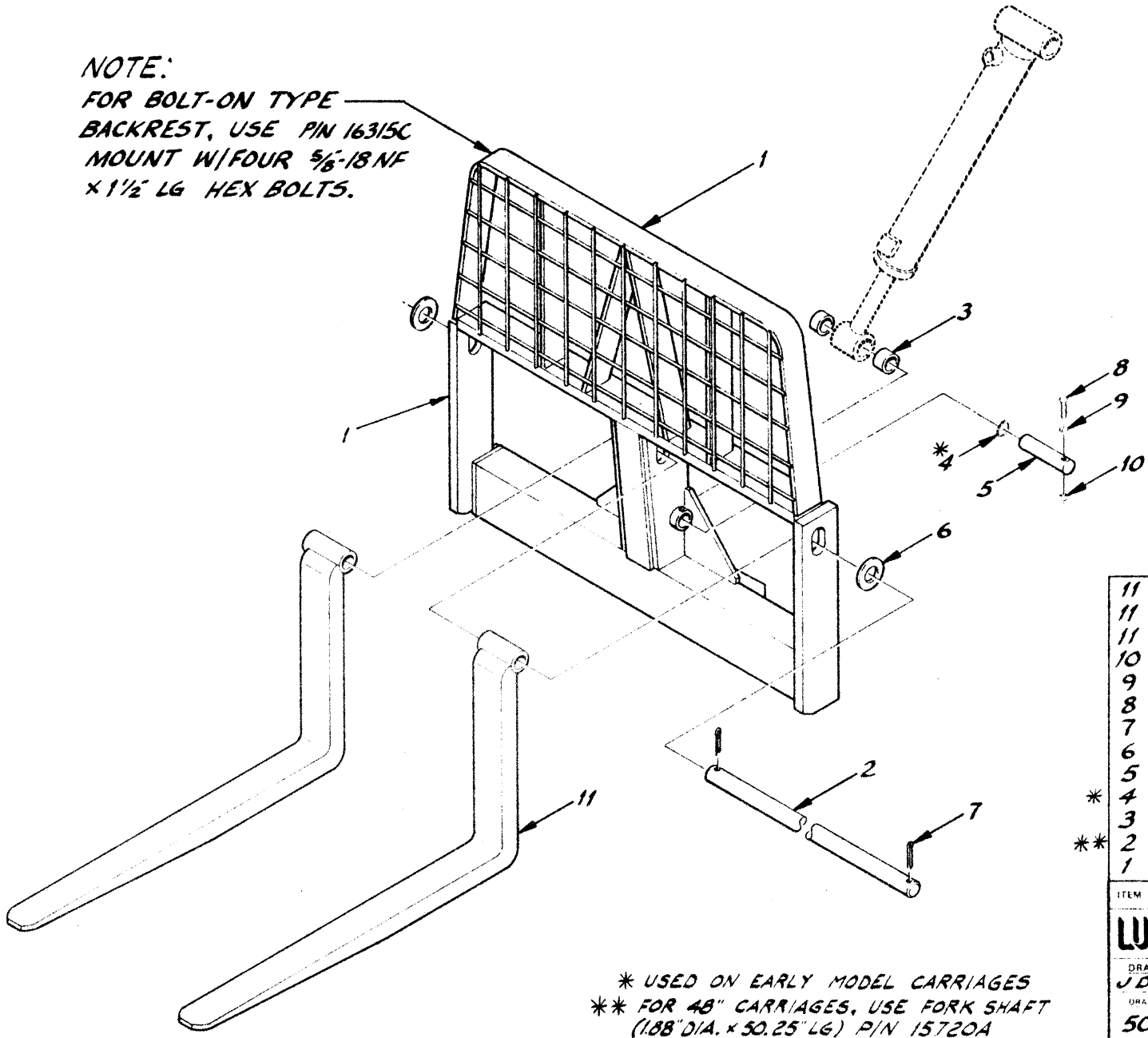

ITEM	PART NO	DESCRIPTION	REQ.
11	P20360	48" CUBING FORK	REF
11	P19390	48" CARRIAGE FORK	REF
11	P19256	STANDARD 42" FORK	2
10	COM'L	NUT, HX 3/8-16 NC	1
9	COM'L	LOCKWASHER, 3/8	1
8	COM'L	BOLT, HX 3/8-16 NC × 3	1
7	COM'L	COTTER PIN, 3/8 × 3	2
6	P19926	FT. WASHER, 1 7/8 I.D. × 4 O.D.	2
5	16219A	PIN	1
* 4	P18838	SNAP RING	1
3	P19106	BUSHING	2
** 2	15559A	FORK SHAFT 1.88 × 52.75	1
1	16316D	50" CARRIAGE WELD'T	1

LULL Engineering Co., Inc. ST PAUL, MINNESOTA 55121

DRAWN BY J DAUB

S/N 101 THRU

DRAWING TITLE
50" STANDARD CARRIAGE ASSEMBLY
MODEL 844

SCALE C

DRAWING NO. 16850

* USED ON EARLY MODEL CARRIAGES

** FOR 48" CARRIAGES, USE FORK SHAFT (1.88" DIA. × 50.25" LG) P/N 15720A

LULL ENGINEERING COMPANY, INC.
3045 HIGHWAY 13
ST. PAUL, MINNESOTA 55121

INDEX OF PARTS

PARTS	PAGE
External Engine Parts	1,2
Front External Engine Parts	3,4
Internal Engine Parts	5,6,7
Starter	8
Alternator	9,10
Distributor	11,12

LULL ENGINEERING COMPANY, INC.
3045 HWY 13
ST. PAUL, MN 55121

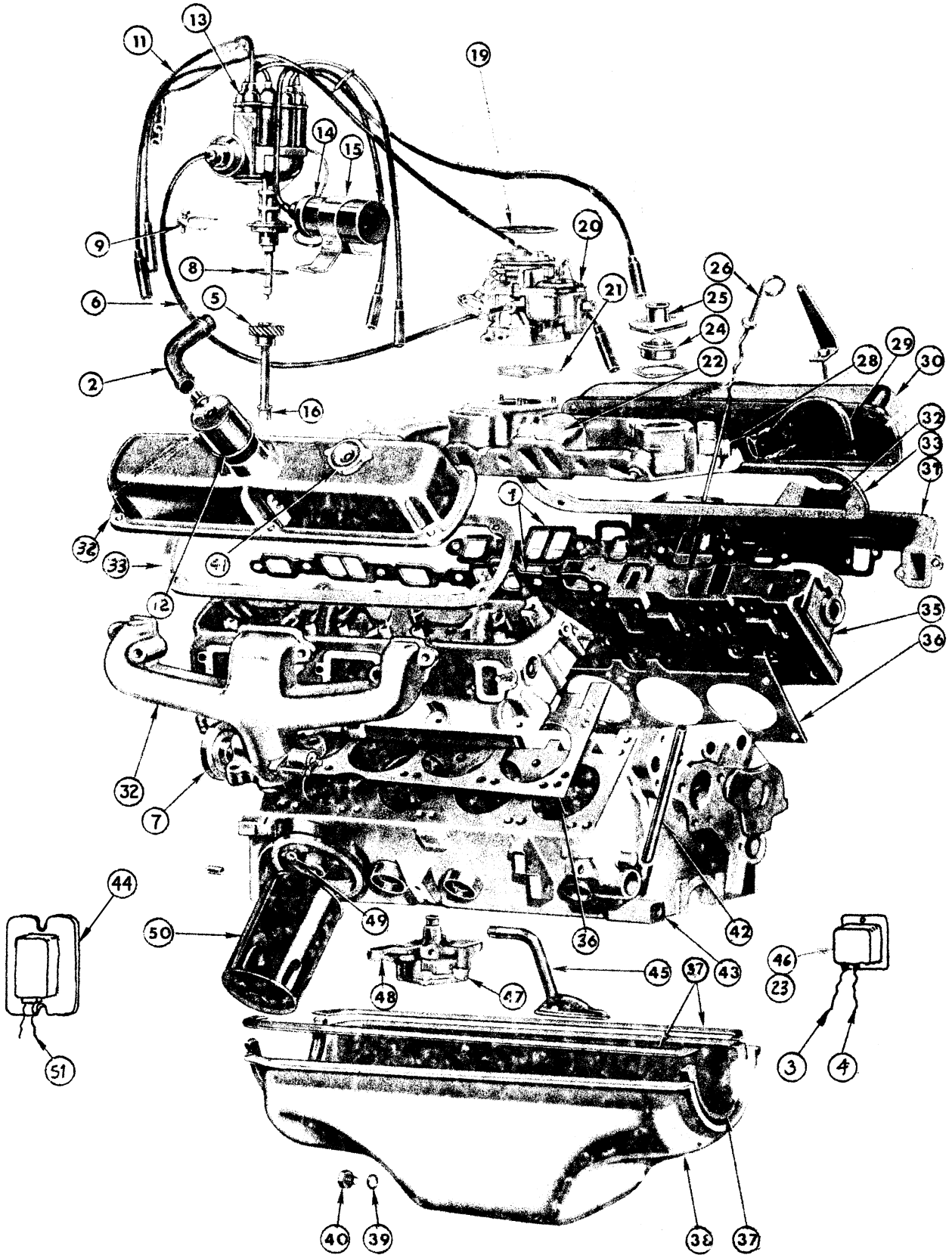

1742

ITEM NO.	PART NO.	DESCRIPTION	QTY.
1	P19723	Gasket, Intake Manifold	2
2	P16617	Hose (13" Lg.)	1
3	P19749	Harness, Electronic Ignition	1
4	P19829	Harness, Electronic Ignition (Brown Wire)	1
5	P19685	Shaft, Oil Pump Drive	1
6	P19686	Hose, Vacuum	1
7	P19717	Heat Control Valve	1
8	P19687	O Ring	1
9	P19688	Clamp	1
10	P19689	Spark Plug Cables (No. 1,2,3,4,)	4
11	P19690	Spark Plug Cables (No. 5,6,7,8,)	4
12	P19718	Grommet	1
13	REF	Distributor (See page 11)	
14	P17778	Coil	1
15	P19691	Bracket, Ignition Coil	1
16	P19692	Bushing	1
17	P19720	Housing, Fly Wheel	1
18	P19721	Fly Wheel	1
19	P19693	Gasket, Carburator (Upper)	1
20	P17333	Carburator	1
21	P19694	Gasket, Carburator (Lower)	1
22	P19695	Manifold, Intake	1
23	P19750	Resistor, Electronic Ignition	1
24	P19696	Thermostat (160°)	1
25	P19697	Connector, Water Outlet	1
26	P20287	Dipstick, Oil	1
27	P19830	Harness, Voltage Regulator	1
28	P19698	Nipple, Water Pump Bypass	2
29	P19699	Hose, Water Pump	1
30	P19700	Cylinder Head Cover (Left)	1
31	P19704	Manifold, Exhaust (Left)	1
32	P19701	Cylinder Head Cover (Right)	1
33	P19702	Gasket, Valve Cover	2
34	P19703	Manifold Exhaust (Right)	1
35	P19705	Head, Cylinder	2
36	P19706	Gasket, Cylinder Heads	2
37	P19708	Gasket Set (Oil Pan)	1
38	P19709	Oil Pan	1
39	P19710	Gasket, Oil Plug	1
40	P19711	Oil Plug	1
41	P19719	Oil Cap, Valve Cover	1
42	P20288	Tube, Dipstick	1
43	P19712	Block (Pistons & Rings Included)	1
44	P19204	Voltage Regulator	1
45	P19713	Strainer, Oil Pump (Pipe Included)	1
46	P19722	Electronic Ignition	1
47	P19714	Cover, Oil Pump	1
48	P19715	Pump, Oil	1
49	P19716	Plug, Oil Line	1
50	P12089	Oil Filter	1

LULL ENGINEERING COMPANY, INC.
3045 HWY 13
ST. PAUL, MN 55121

FRONT EXTERNAL ENGINE PARTS
318 CHYSLER

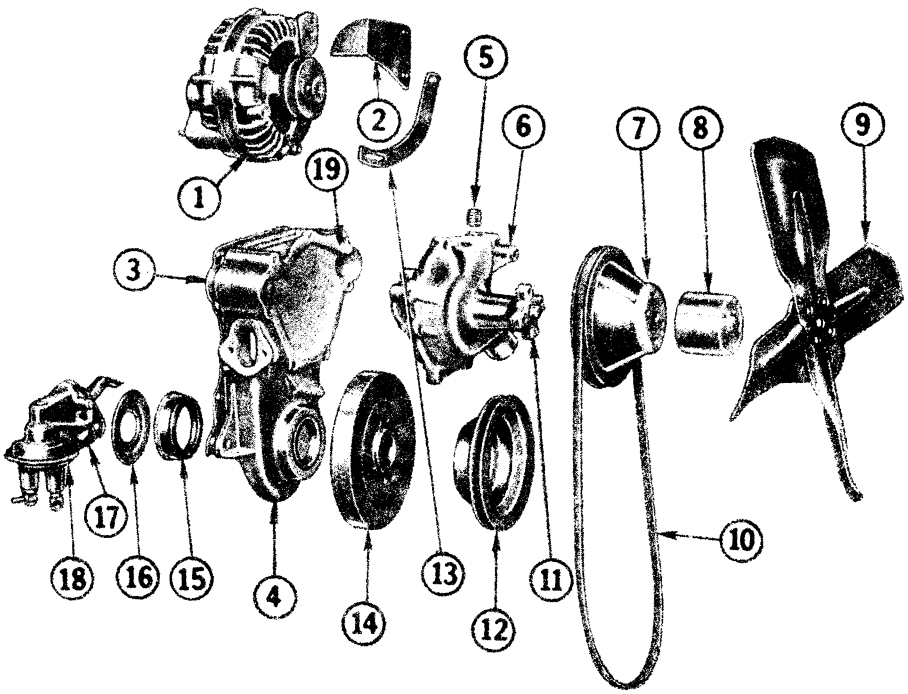

LULL ENGINEERING COMPANY, INC
3045 HWY 13
ST. PAUL, MN 55121

EXTERNAL PARTS (FRONT)
318 CHYSLER

ITEM NO.	PART NO.	DESCRIPTION	QTY
1	REF	Alternator (See Page 9)	
2	P19570	Bracket	1
3	P19571	Gasket	1
4	P19572	Cover	1
5	P10554	Plug	1
6	P17776	Water pump	1
7	P19575	Fan Pulley, Double	1
8	P17449	Spacer	1
9	P17201	Fan	1
10	P17786	Belt	2
11	P19574	Hub	2
12	P17779	Drive Pulley, Double	1
13	P19576	Strap	1
14	P19577	Damper	1
15	P19578	Oil Seal	1
16	P19579	Oil Slinger	1
17	P19580	Gasket, Fuel pump	1
18	P17780	Fuel Pump	1
19	P17781	Gasket, Water pump	1

LULL ENGINEERING COMPANY, INC.
3045 HWY 13
ST. PAUL, MN 55121

ENGINE INTERNAL COMPONANTS
318 CRYSLER

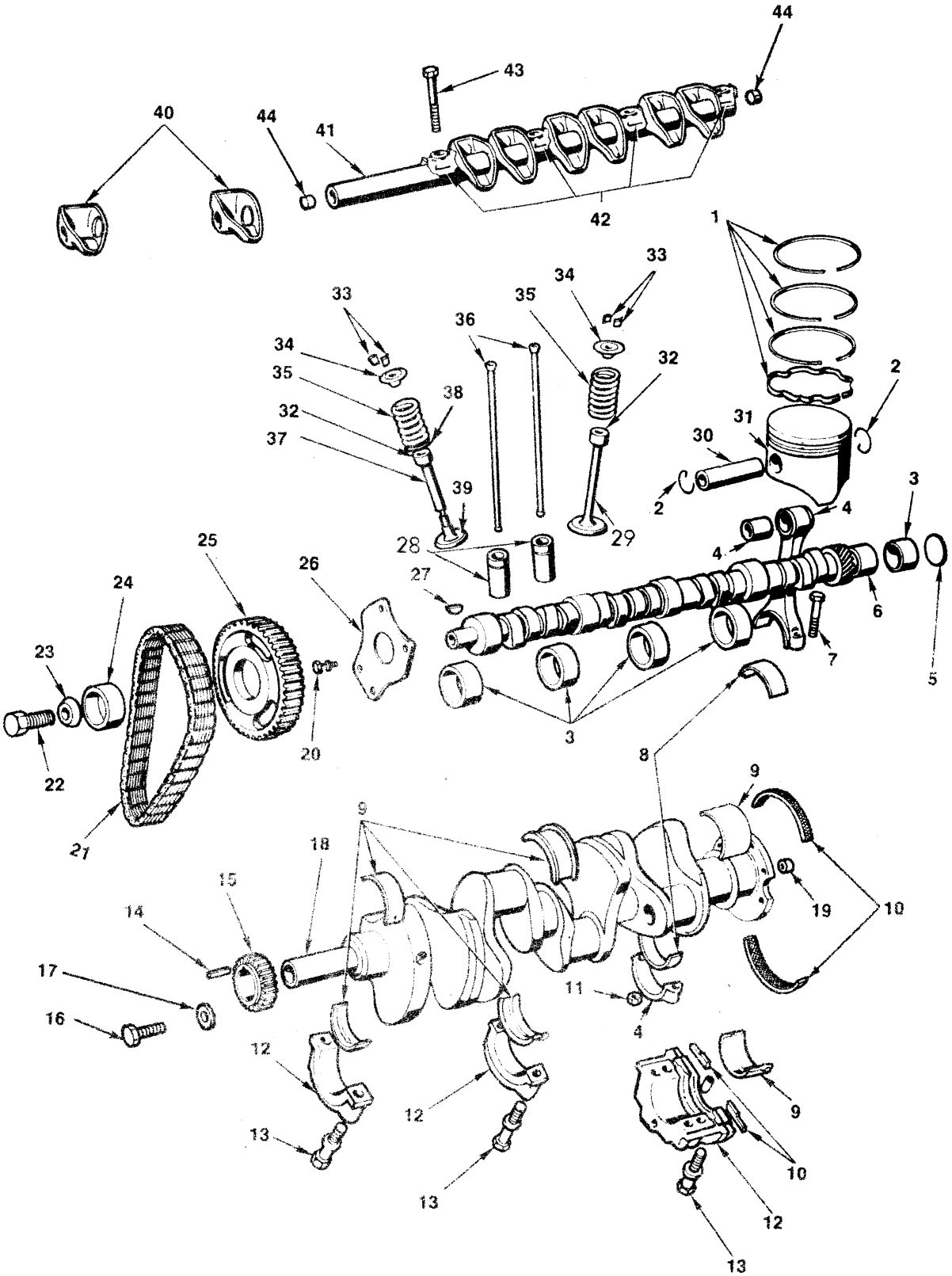

ITEM NO.	PART NO.	DESCRIPTION	QTY
1	P19592	Rings, Single Cyl. sets Std. to.009 O/S	8
	P19593	Rings, Single Cyl. Sets .020 to .029 O/S	8
	P19594	Rings, Single Cyl. Sets .040 to .049 O/S	8
2	P19595	Ring, Piston Retaining	16
3	P19596	Bearing, camshaft No. 1	1
	P19597	Bearing, camshaft No. 2	1
	P19598	Bearing, camshaft No. 3	1
	P19599	Bearing, camshaft No. 4	1
	P19600	Bearing, camshaft No. 5	1
4	P19601	Rod, Connecting	8
5	P19602	Plug, Cyl. block camshaft rear bearing	1
6	P19603	Camshaft	1
7	P19604	Bolt, Connecting rod bearing cap	16
8	P19605	Bearing Pkg. Connecting rod Std.	8
	P19606	Bearing Pkg. Connecting rod .001 U/S	8
	P19607	Bearing Pkg. Connecting rod .002 U/S	8
	P19608	Bearing Pkg. Connecting rod .003 U/S	8
	P19609	Bearing Pkg. Connecting rod .010 U/S	8
	P19610	Bearing Pkg. Connecting rod .012 U/S	8
9	P19611	Bearing Pkg. Crankshaft	
		No. 1, 2, 4 Std.	3
	P19612	.001 U/S	3
	P19613	.002 U/S	3
	P19614	.003 U/S	3
	P19615	.010 U/S	3
	P19616	.012 U/S	3
		No. 3	
	P19617	Std.	1
	P19618	.001 U/S	1
	P19619	.002 U/S	1
	P19620	.003 U/S	1
	P19621	.010 U/S	1
	P19622	.012 U/S	1
		No. 5	
	P19623	Std.	1
	P19624	.001 U/S	1
	P19625	.002 U/S	1
	P19626	.003 U/S	1
	P19627	.010 U/S	1
	P19628	.012 U/S	1
10	P19629	Seal Pkg. Crankshaft Bearing Oil	1
11	P19630	Nut, Connecting Rod Bearing Cap Bolt	16
12	P19631	Cap, Crankshaft Bearing	
		No. 1,2,4, and 6 of 6027264	3
	P19632	No. 3	1
	P19633	No. 5	1
13	P19634	Screw, Crankshaft Bearing Cap	10
14	P19635	Key, Crankshaft	1
15	P19636	Sprocket, Crankshaft	1
16	P19637	Screw, Crankshaft	1
17	P19638	Washer, Crankshaft screw	1
18	P19639	Crankshaft	1

LULL ENGINEERING COMPANY, INC.
3045 HWY 13
ST. PAUL, MN 55121

ITEM NO.	PART NO.	DESCRIPTION	QTY
19	P19640	Bushing, Crankshaft Pilot	1
20	P19641	Screw, Camshaft Sprocket Thrust Plate	3
21	P19642	Chain, Timing	1
22	P19643	Screw, Sprocket Retaining	1
23	P19644	Washer, Camshaft Sprocket Retaining Screw	1
24	P19645	Eccentric, Camshaft	1
25	P19646	Sprocket, Camshaft	1
26	P19647	Plate, Camshaft Sprocket Thrust	1
27	P19648	Key, Camshaft Sprocket	1
28	P19649	Tappet, Valve Std	16
	P19650	.001 O/S	16
	P19651	.008 O/S	16
	P19652	.030 O/S	16
29	P19653	Valve, Intake Std	8
	P19654	.005 O/S	8
	P19655	.015 O/S	8
	P19656	.030 O/S	8
30	P19657	Pin, Piston Std	8
	P19658	.003 O/S	8
	P19659	.008 O/S	8
31	P19660	Piston, w/Pin Std	8
	P19661	.005 O/S	8
	P19662	.020 O/S	8
	P19663	.040 O/S	8
32	P19664	Shield, Valve Stem Oil Intake	8
	P19665	Shield, Valve Stem Oil Exhaust	8
33	P19666	Lock, Valve Spring Retainer, Intake & Exhaust	32
34	P19667	Retainer, Valve Spring Intake	8
	P19668	Retainer, Valve Spring Exhaust	8
35	P19669	Spring, Valve Intake	8
	P19670	Spring, Valve Exhaust	8
36	P19671	Rod, Valve Push	16
37	P19672	Valve Exhaust Std	8
	P19673	.005 O/S	8
	P19674	.015 O/S	8
	P19675	.030 O/S	8
38	P19676	Spacer, Valve Spring	AR
40	P19677	Rocker Valve Right	8
	P19678	Rocker Valve Left	8
41	P19679	Shaft, Valve Rocker	2
42	P19680	Retainer, Valve Rocker Shaft Ends & Center	6
	P19681	Retainer, Valve Rocker Shaft Intermmediate	4
43	P19682	Screw, Valve Rockershaft Retaining	10
44	P19683	Plug, Valve Rocker Shaft	4
45	P19684	Gasket Set, Valve Grind	1

LULL ENGINEERING COMPANY, INC.
3045 HWY. 13
ST. PAUL, MN. 55121

STARTER
318 CHRYSLER
P19581
USED ON S/N 119 & UP

ITEM	PART	DESCRIPTION	QTY.
1	P20425	Housing	1
2	P20174	Solonoid Package	1
3	P20175	Stud & Seal Pkg., Solonoid Contact	1
4	P20176	Clutch	1
5	P20177	Coil Package	1
6	P20178	Armature	1
7	P20179	Thrust Washer Package	1
8	P20180	Head, Commutator End	1
9	P20181	Bolt	2
10	P20182	Spring Package, Brush	1
11	P20183	Mounting Plate & Brush Package	1

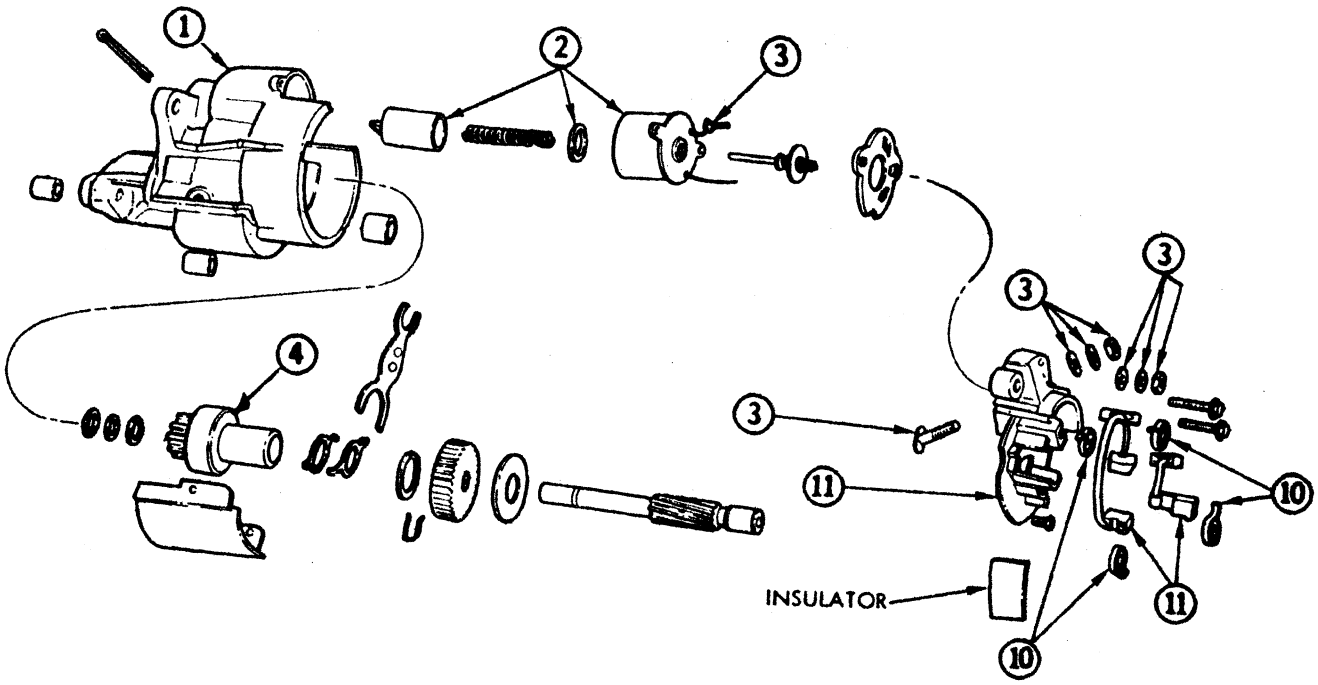

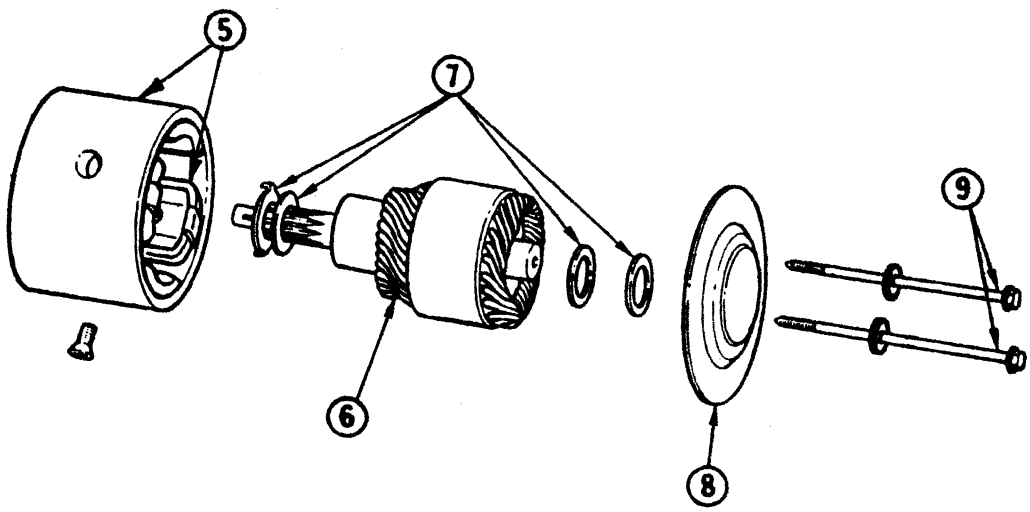

LULL ENGINEERING COMPANY, INC.
3045 HWY 13
ST PAUL, MN 55121

ALTERNATOR
318 CRYSLER
P17700

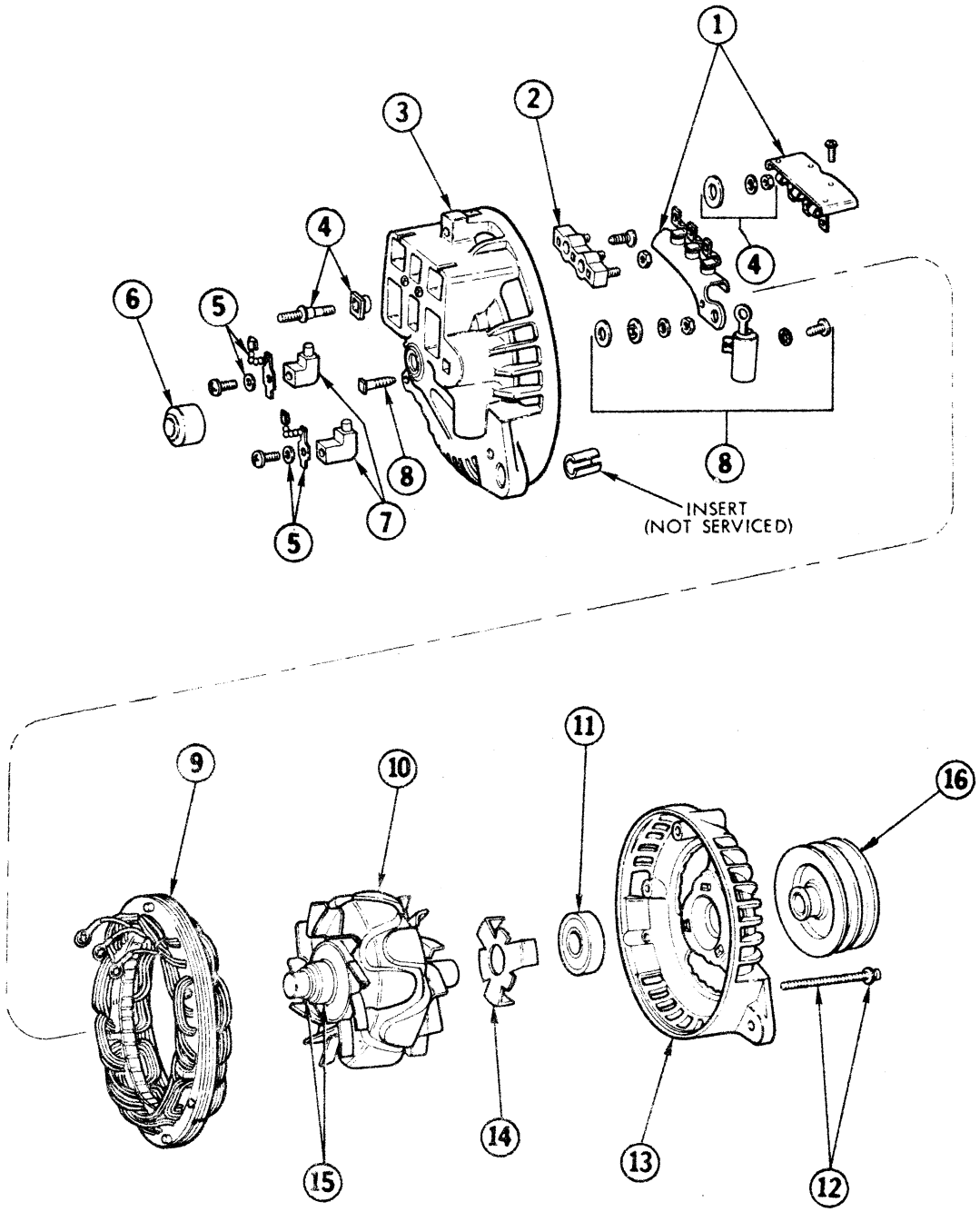

LULL ENGINEERING COMPANY, INC.
3045 HWY 13
ST. PAUL, MN 55121

ALTERNATOR
CRYSLER 318
P17700

ITEM NO.	PART NO.	DESCRIPTION	QTY
1	P19551	Heat Sink and Batt. pkg, Positive	1
	P19552	Negative	1
2	P19553	Insulator	1
3	P19554	Shield, Rectifier end	1
4	P19555	Terminal, Battery positive heat sink	1
5	P19556	Brush, washer and terminal package	1
6	P19557	Bearing, Rectifier end shield	1
7	P19558	Holder, Brush Axial	1
	P19559	Holder, Brush Radial	1
8	P19560	Capacitor and insulator package	1
9	P19561	Stator	1
10	P19562	Rotor	1
11	P19563	Bearing, Drive end shield	1
12	P19564	Screw, Frame	3
13	P19565	Shield, Drive end	1
14	P19566	Plate, Drive end bearing retainer	1
15	P19567	Slip Ring and retainer package	1
16	P19569	Pulley	1

LULL ENGINEERING COMPANY, INC.
3045 HWY 13
ST. PAUL, MN 55121

DISTRIBUTOR
318 CRYSLER
P19538

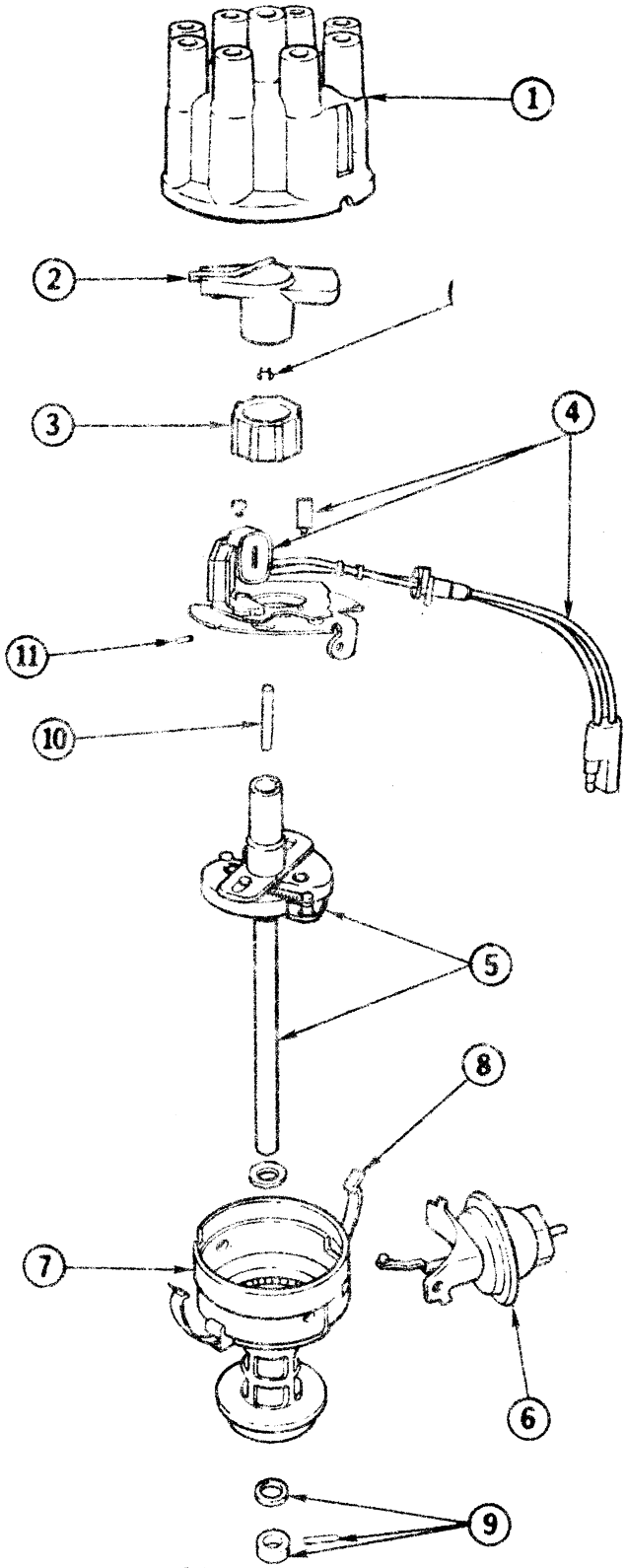

1747

LULL ENGINEERING COMPANY, INC.
3045 HWY 13
ST. PAUL, MN 55121

DISTRIBUTOR ASSEMBLY
318 CRYSLER
P19538

ITEM NO.	PART NO.	DESCRIPTION	QTY
1	P17298	Cap	1
2	P17297	Rotor	1
3	P19540	Reluctor	1
4	P19544	Pickup and Plate Ass'y	1
5	P19545	Governor Ass'y	1
6	P19548	Control, Vacuum	1
7	P19547	Housing and Bearing	1
8	P19546	Spring, Cap Attaching	2
9	P19549	Collar and Pin Package	1
10	P19542	Pin	1
11	P19541	Pin	1
12	P19539	Snap Ring	1

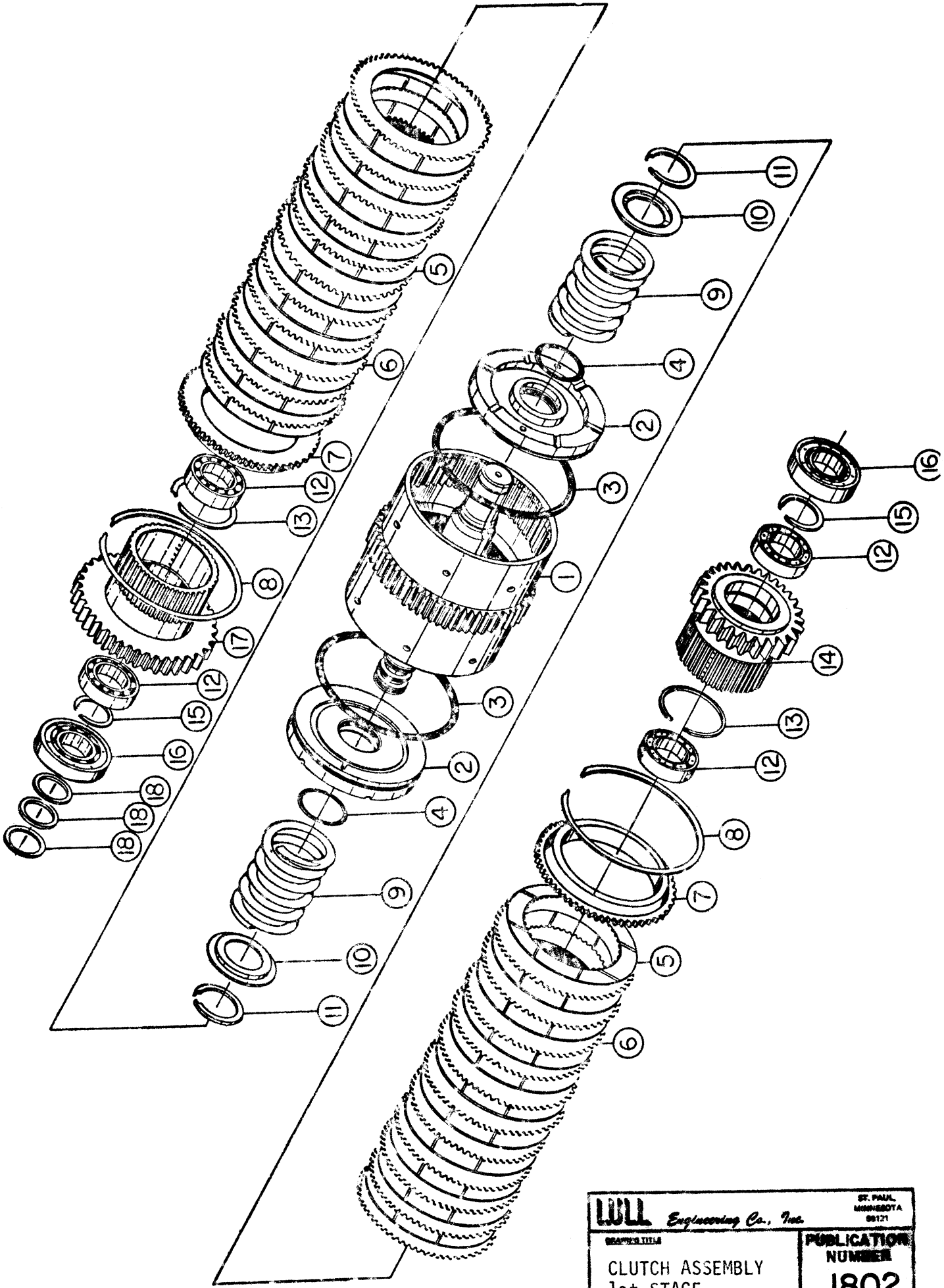

LWLL Engineering Co., Inc.
ST. PAUL, MINNESOTA 55121

DRAWING TITLE
CLUTCH ASSEMBLY
1st STAGE

PUBLICATION NUMBER
1802

ITEM	PART NO.	DESCRIPTION	QTY.
	P18603	Clutch Assembly, 1ST Stage (Spec 7201 & 5800)	1
	P19817	Clutch Assembly, 1ST. Stage (Spec 6037)	
1.	P18604	Clutch, 1ST. Stage	1
2.	P18605	Piston, Clutch	2
3.	P18606	Ring, Seal	2
4.	P18607	O-Ring, Piston	2
5.	P18608	Plate, Clutch	22
6.	P18609	Plate, Separator	22
7.	P18610	Retainer, Clutch Plate	2
8.	P18611	Snap Ring	2
9.	P18612	Clutch Spring	2
10.	P18613	Retainer, Clutch Spring	2
11.	P18614	Ring, Retainer	2
12.	P18615	Bearing	4
13.	P18616	Ring, Retainer	2
14.	P18617	Asm. Gear & Hub	1
15.	P18618	Retaining Ring	2
16.	P18619	Bearing, Roller	2
17.	P18627	Asm. Gear & Hub (Used with P18603 Ass'y.)	1
	P19763	Asm. Gear & Hub (Used with P19818 Ass'y.)	1
18.	P18620	Ring, Seal	3

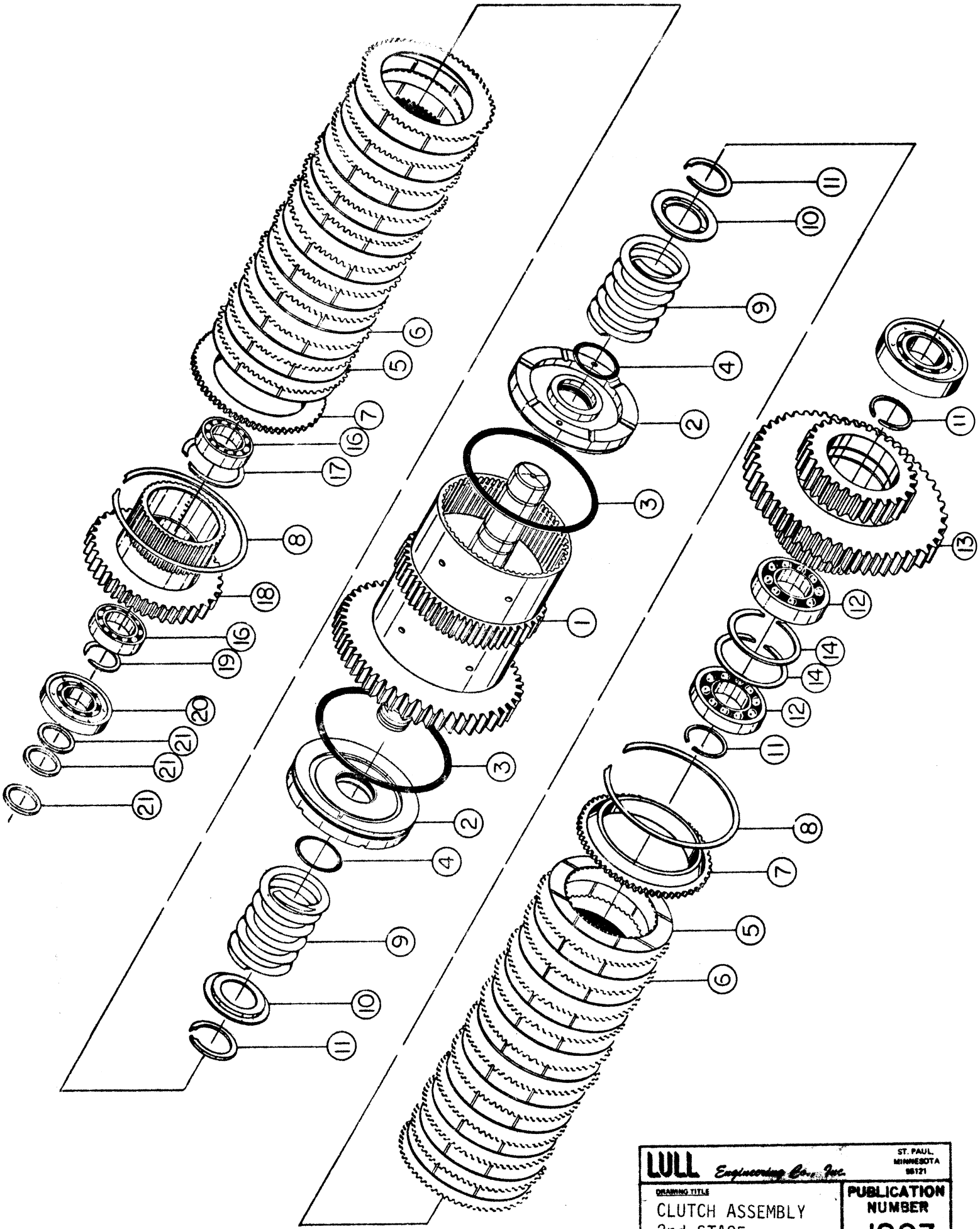

LULL Engineering Co., Inc.
ST. PAUL, MINNESOTA 55121

DRAWING TITLE
CLUTCH ASSEMBLY
2nd STAGE

PUBLICATION NUMBER
1803

ITEM	PART NO.	DESCRIPTION	QTY.
	P18621	Clutch Assembly, 2ND Stage (Spec 7201 & 5800)	1
	P19819	Clutch Assembly, 2ND Stage (Spec 6037)	1
1.	P18622	Clutch, 2ND Stage (Used with P18621 Ass'y.)	1
	P19819	Clutch, 2ND Stage (Used with P19818 Ass'y.)	1
2.	P18605	Piston, Clutch	2
3.	P18606	Ring, Seal	2
4.	P18607	O-Ring, Piston	2
5.	P18608	Plate, Clutch	22
6.	P18609	Plate, Sepeator	22
7.	P18610	Retainer, Clutch Plate	2
8.	P18611	Snap Ring	2
9.	P18612	Clutch Spring	2
10.	P18613	Retainer, Clutch Spring	2
11.	P18614	Ring, Retainer	4
12.	P18623	Bearing	2
13.	P18624	Asm. Gear & Hub	1
14.	P18625	Ring, Retainer	2
15.	P18626	Bearing, Roller	1
16.	P18615	Bearing	2
17.	P18616	Ring, Retainer	1
18.	P18627	Asm. Gear & Hub (Input Side)	1
19.	P18618	Ring, Retainer	1
20.	P18619	Bearing, Roller	1
21.	P18620	Ring, Seal	3

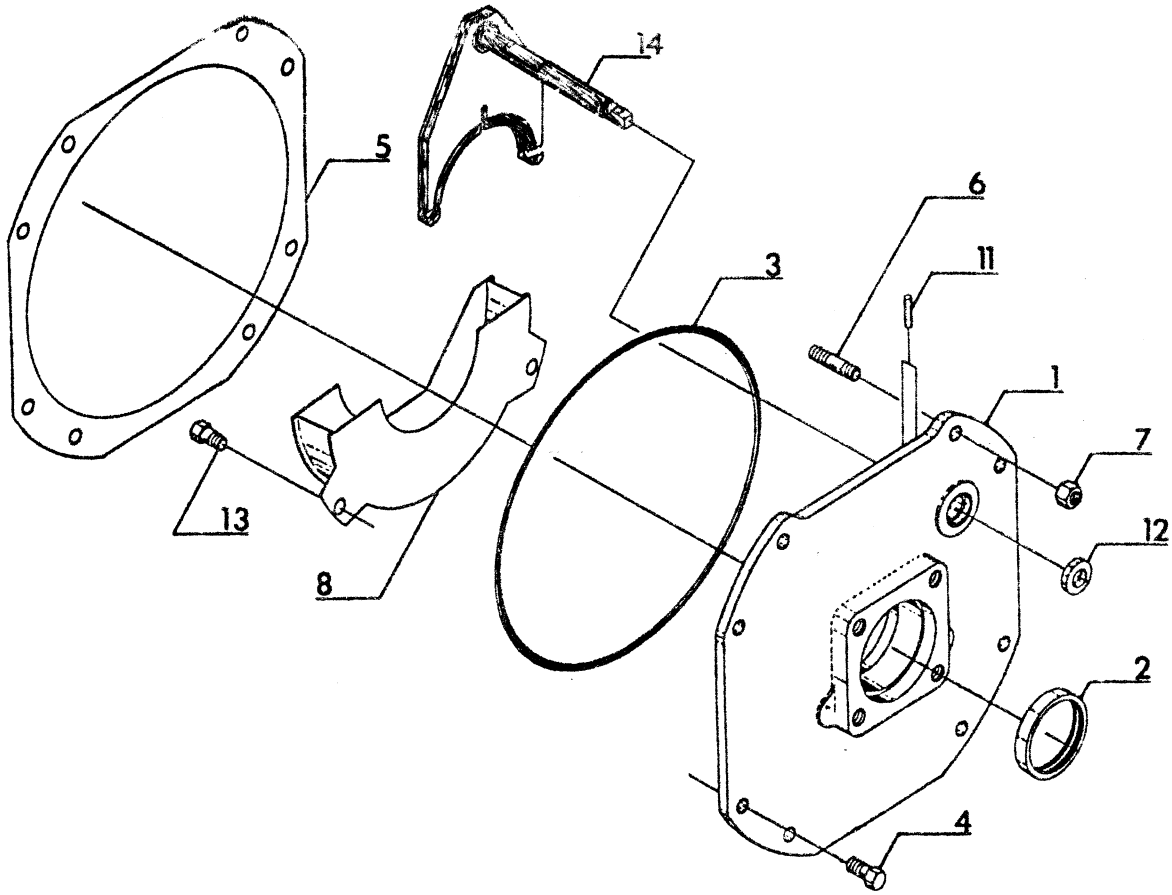

ITEM	PART NO.	DESCRIPTION		QTY.
	P20641	Output Group Retainer Assy.	Spec 7711A & 8239A	1
	P24573	Output Group Retainer Assy.	Spec 7711B,8239B,9673	1
1	P20745	Cap, Output Retainer	Spec 7711A & 8239A	1
	P24570	Cap, Output Retainer	Spec 7711B,8239B, 9673	1
2	P18680	Oil Seal		1
3	P20752	O-Ring		1
4	P20753	Capscrew		6
5	P20758	Shim Pack		1
	P24564	Shim - .001		A/R
	P24565	Shim - .005		A/R
	P24566	Shim - .015		A/R
6	P20767	Stud		2
7	P20813	Nut		2
8	P20814	Oil Trough	Spec 7711A & 8239A	1
	P24569	Oil Trough	Spec 7711B,8239B,9673	1
9	P20421	Capscrew		3
10	P20422	Dynaseal Washers		3
11	P20423	Powell Pin		2
12	P20424	Oil Seal		1
13	P24592	Capscrew	Spec 7711B,8239B,9673	2
14	P20865	Fork Shaft	Spec 7711A & 8239A	1
	P24567	Fork Shaft	Spec 7711B, 8239B & 9673	1
	P25407	Fork Shaft	Spec 9673C	1

LULL Engineering Co., Inc. ST. PAUL, MINNESOTA

DRAWING TITLE
OUTPUT & OUTPUT RETAINER ASSEMBLY

PUBLICATION NUMBER
1808

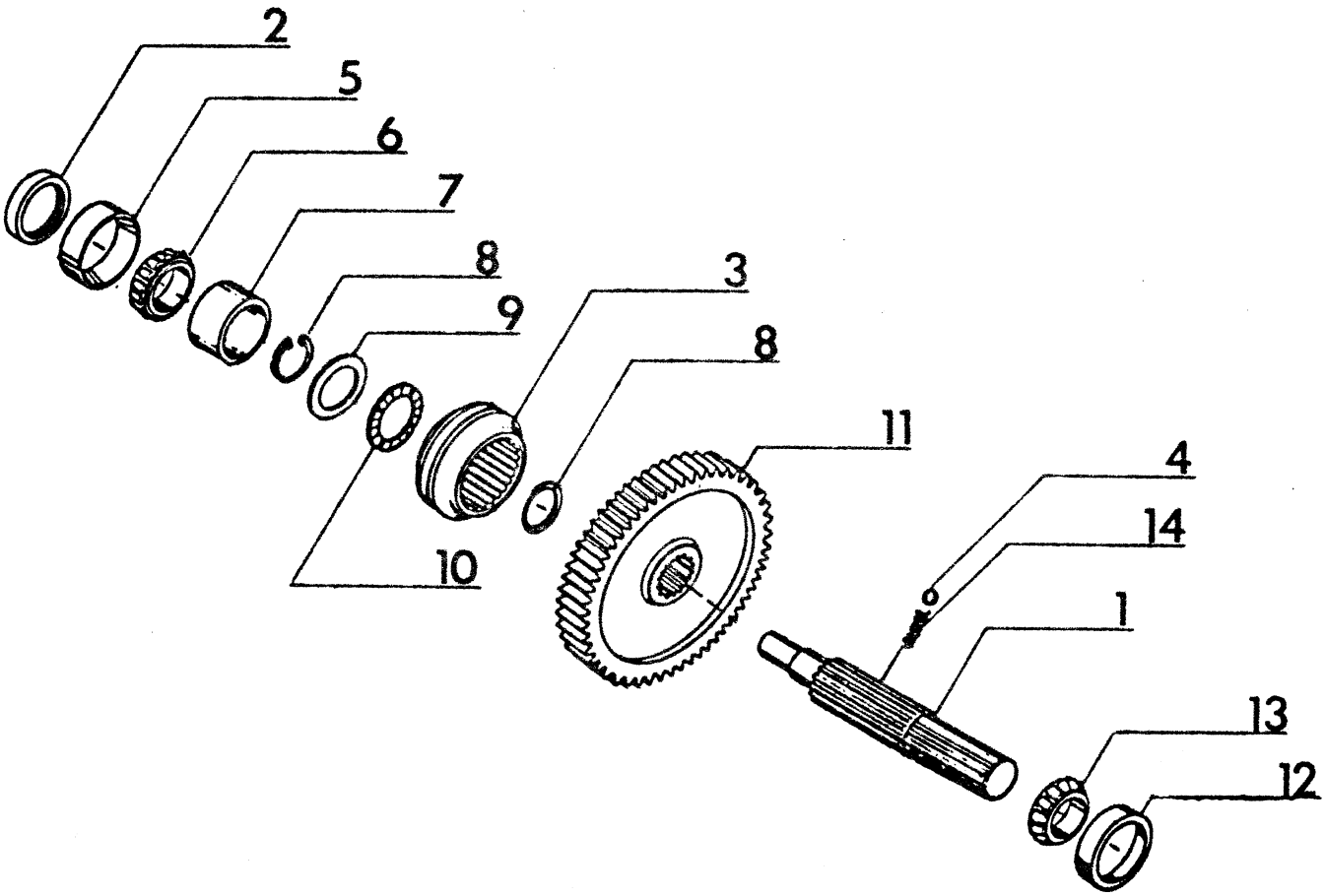

ITEM	PART NO.	DESCRIPTION	QTY
	P20629	Output Group Assembly Spec 7711, 8239 & 9673	1
1	P20656	Output Shaft	1
2	P20710	Oil Seal	1
3	P20658	Shift Collar	1
4	P20659	Ball	3
5	P20667	Cup Bearing	1
6	P20668	Cone Bearing	1
7	P20690	Spacer	1
8	P20685	Snap Ring	2
9	P20686	Thrust Washer	1
10	P20688	Thrust Bearing	1
11	P20722	Output Gear	1
12	P20705	Cup Bearing	1
13	P20709	Cone Bearing	1
14	P20728	Spring	3

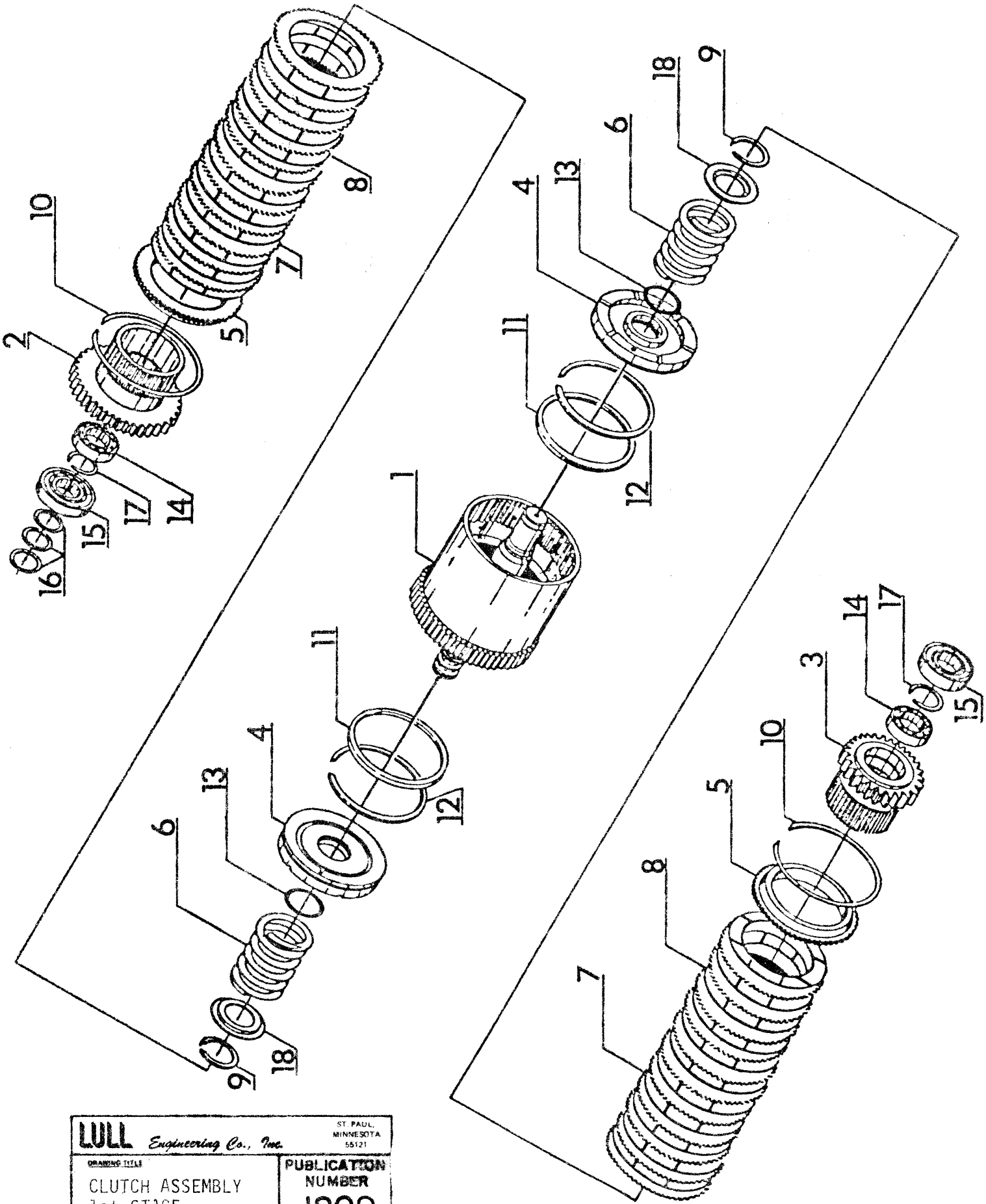

LULL Engineering Co., Inc.
ST. PAUL, MINNESOTA 55121

DRAWING TITLE
CLUTCH ASSEMBLY
1st STAGE

PUBLICATION NUMBER
1809

ITEM	PART NO.	DESCRIPTION		QTY.
	P24518	Clutch Assy., 1st Stage	Spec 8239A	1
	P20517	Clutch Assy., 1st Stage	Spec 8239B& 9673	1
	P20521	Clutch Assy., 1st Stage	Spec 7711A	1
	P24575	Clutch Assy., 1st Stage	Spec 7711B	1
1	P20563	Shaft	Spec 7711A & 8239A	1
	P24574	Shaft	Spec 7711B,8239B,9673	1
2	P20642	Gear & Hub	Spec 8239 & 9673	1
	P20573	Gear & Hub	Spec 7711	1
3	P20578	Gear & Hub		1
4	P20591	Piston, Clutch		2
5	P20592	Retainer Plate		2
6	P20599	Belleville Spring		8
7	P20602	Clutch Plate		12
8	P18609	Separator Plate		12
9	P20605	Retaining Ring		2
10	P18611	Snap Ring		2
11	P24541	Ring Seal		2
12	P24535	Back-up Ring		2
13	P20612	O-Ring		2
14	P24451	Bearing		2
15	P24450	Roller Bearing		2
16	P18620	Ring Seal		3
17	P18618	Retaining Ring		2
18	P20625	Spring Retainer		2

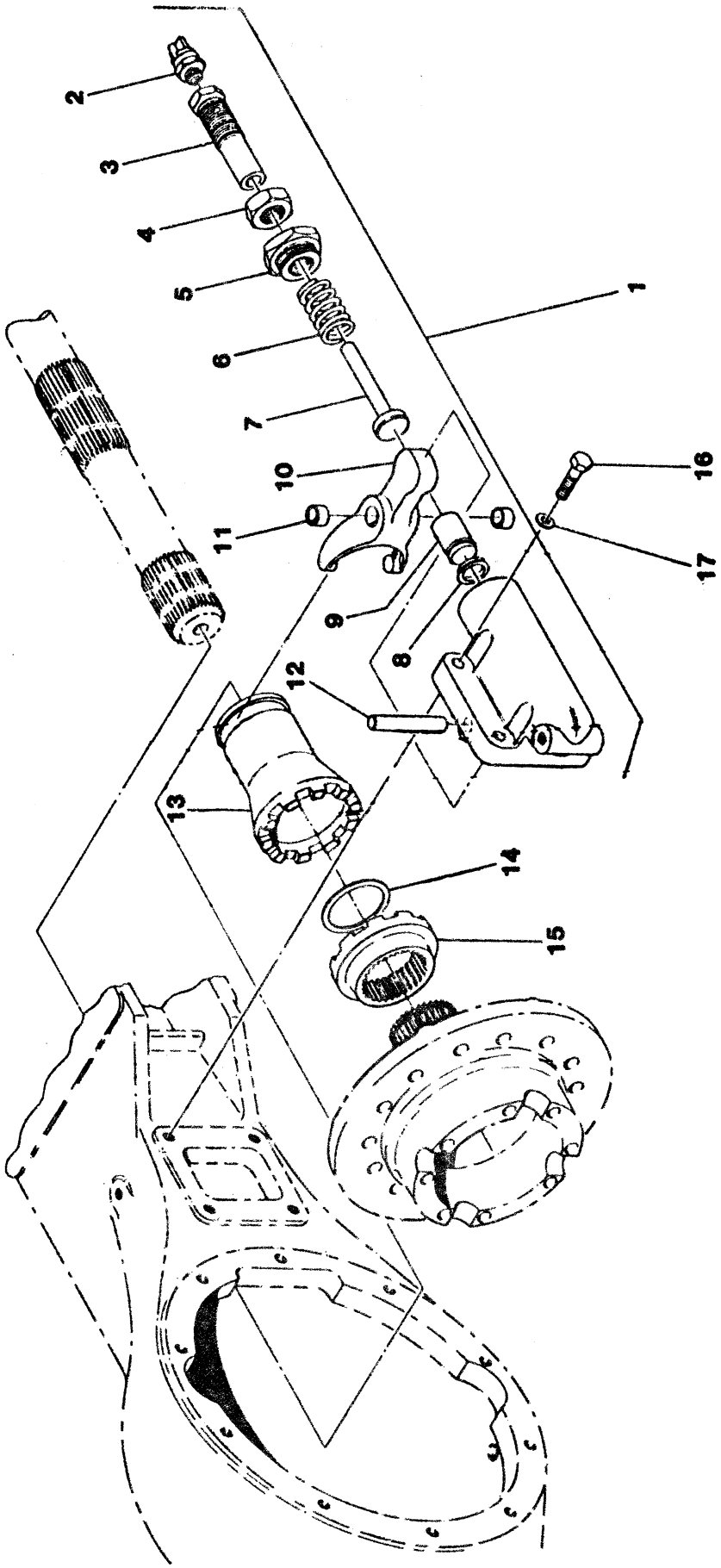

1903

644 S/N 1695 Thru
844 S/N 1722, 1724 Thru
1044 S/N 101 Thru

ITEM	PART NO.	DESCRIPTION	QUANTITY PER AXLE
1	P26806	Differential Lock Ass'y (Incl. Item 2-12)	1
2	P26180	Switch	1
3	P26815	Locating Bolt	1
4	P26803	Jam Nut	1
5	P26819	Retainer Nut, Spring	1
6	P26174	Spring	1
7	P26818	Rod	1
8	P26814	Oil Seal	1
9	P26823	Piston	1
10	P26833	Shift Fork	1
11	P26849	Bushing	2
12	P26837	Pin, Shift Fork	1
13	P26805	Clutch Collar	1
14	P26822	Retaining Ring	1
15	P26832	Clutch Collar	1
16	P00206	Bolt, Hx. 3/8 - 16 X 1 1/2	4
17	P01404	Flatwasher, 3/8	4
18	COM'L	Gasket Sealer	A/R

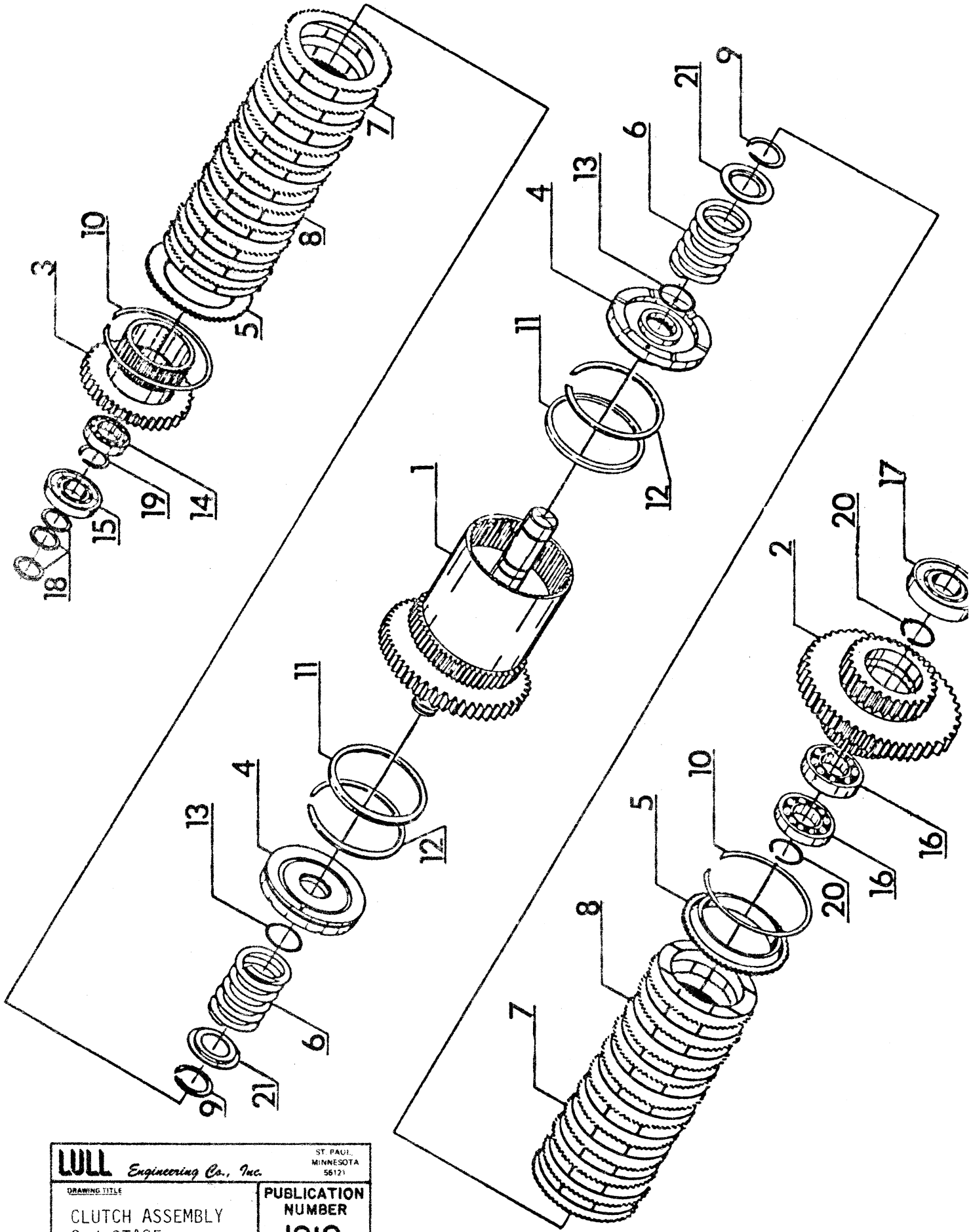

LULL Engineering Co., Inc.
ST. PAUL, MINNESOTA 55121

DRAWING TITLE
CLUTCH ASSEMBLY
2nd STAGE

PUBLICATION NUMBER
1810

ITEM	PART NO.	DESCRIPTION		QTY.
	P24519	Clutch Assy., 2nd Stage	Spec 8239A	1
	P20626	Clutch Assy., 2nd Stage	Spec 8239B & 9673	1
	P20628	Clutch Assy., 2nd Stage	Spec 7711A	1
	P24578	Clutch Assy., 2nd Stage	Spec 7711B	1
1	P20646	Shaft	Spec 7711A & 8239A	1
	P24577	Shaft	Spec 7711B,8239B,9673	1
2	P20669	Gear & Hub		1
3	P20573	Gear & Hub	Spec 7711	1
	P20642	Gear & Hub	Spec 8239 & 9673	1
4	P20591	Piston, Clutch		2
5	P18609	Seperator Plate		12
6	P20599	Belleville Spring		8
7	P20592	Retainer Plate		2
8	P20602	Clutch Plate		12
9	P20605	Retaining Ring		2
10	P18611	Snap Ring		2
11	P24541	Ring Seal		2
12	P24535	Back-Up Ring		2
13	P20612	O-Ring		2
14	P24451	Bearing		1
15	P24450	Bearing		1
16	P22741	Bearing		2
17	P20670	Bearing		1
18	P18620	Ring Seal		3
19	P18614	Retaining Ring		2
20	P18618	Retaining Ring		1
21	P20625	Retaining Ring		2

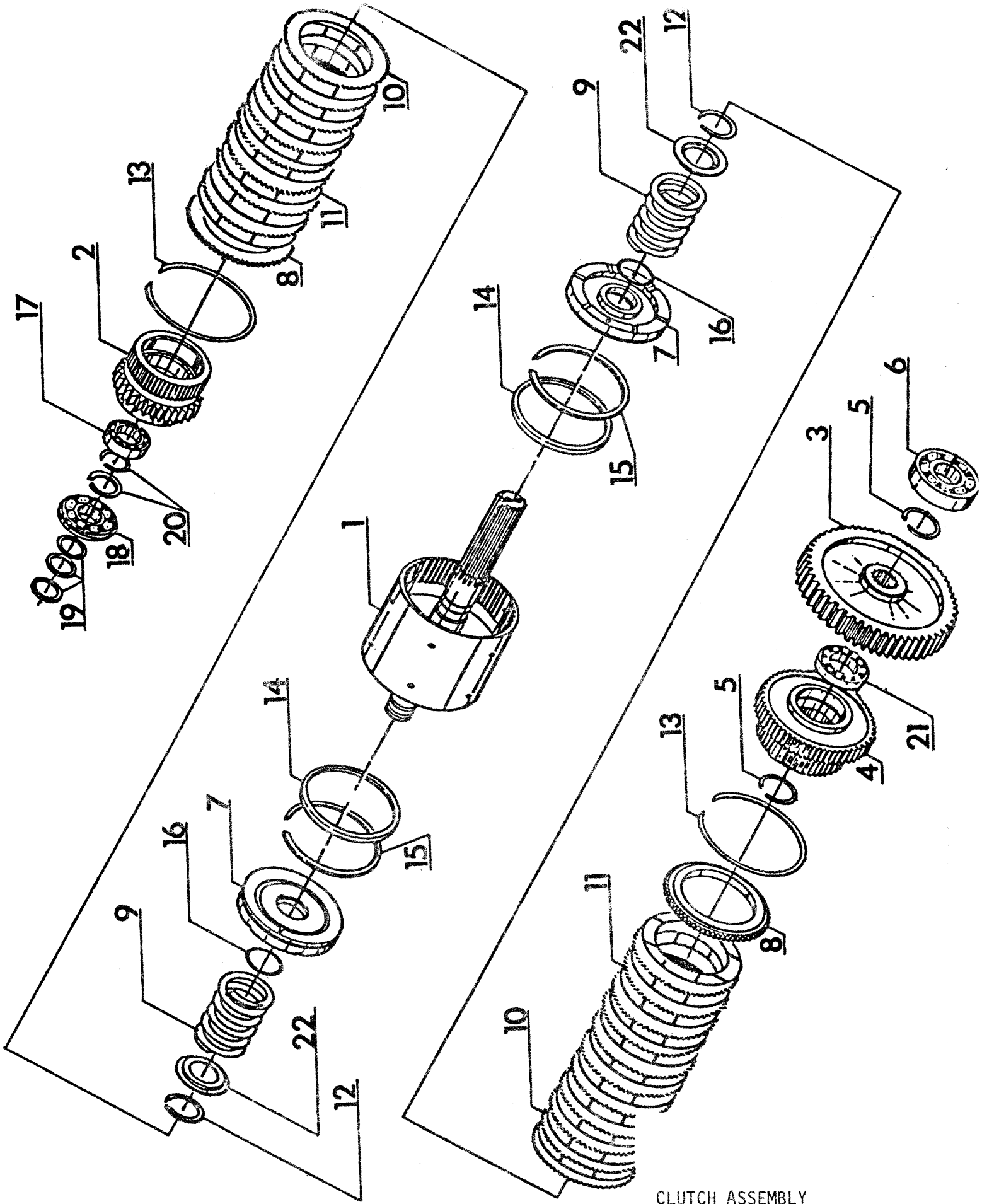

CLUTCH ASSEMBLY
3rd STAGE

1811

ITEM	PART NO.	DESCRIPTION		QTY.
	P24538	Clutch Assy., 3rd Stage	Spec 7711A & 8239A	1
	P20672	Clutch Assy., 3rd Stage	Spec 7711B,8239B, 9673	1
1	P20673	Shaft	Spec 7711A & 8239A	1
	P24576	Shaft	Spec 7711B,8239B,9673	1
2	P20678	Gear & Hub		1
3	P20682	Gear, Hi Range		1
4	P20683	Gear & Hub		1
5	P18614	Retaining Ring		2
6	P20670	Bearing		1
7	P20591	Piston, Clutch		2
8	P20592	Retainer Plate, Clutch		2
9	P20599	Belleville Spring		8
10	P20602	Clutch Plate		10
11	P18609	Separator Plate		10
12	P20605	Retaining Ring		2
13	P18611	Snap Ring		2
14	P24541	Ring Seal		2
15	P24535	Back-Up Ring		2
16	P20612	O-Ring		2
17	P24451	Bearing		1
18	P24450	Bearing		1
19	P18620	Ring Seal		3
20	P18618	Retaining Ring		2
21	P22741	Bearing		1
22	P20625	Spring Retainer		2

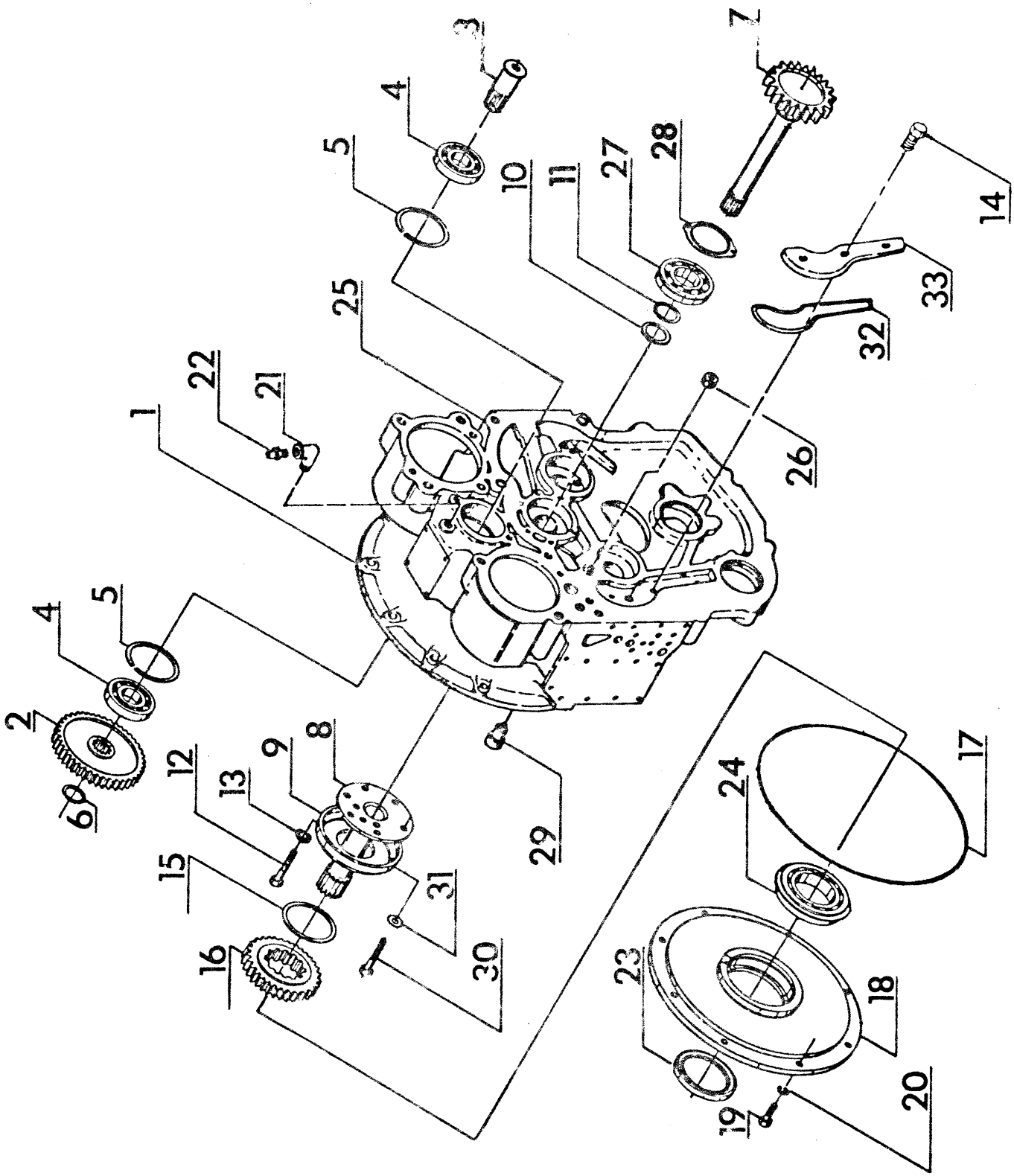

LULL Engineering Co., Inc. ST. PAUL, MINNESOTA 55121	
DRAWING TITLE FRONT COVER ASSEMBLY	PUBLICATION NUMBER 1812

ITEM	PART NO.	DESCRIPTION		QTY.
	P19433	Front Cover Assembly	Spec 6037	1
	P24531	Front Cover Assembly	Spec 8239A	1
	P24523	Front Cover Assembly	Spec 8239B & 9673	1
	P18505	Front Cover Assembly	Spec 7201 & 5800	1
	P24532	Front Cover Assembly	Spec 7711A	1
	P24524	Front Cover Assembly	Spec 7711B	1
1	P18506	Front Cover	Spec 6037 & 7201 & 5800	1
	P24521	Front Cover	Spec 7711A & 8239A	1
	P24525	Front Cover	Spec 7711B, 8239B & 9673	1
2	P18507	Gear		1
3	P18508	Shaft		1
4	P18509	Bearing		2
5	P18510	Ring Retainer		2
6	P18511	Ring Retainer		1
7	P18512	Input Shaft	Spec 5800, 7201, 8239 & 9673	1
	P19754	Input Shaft	Spec 6037 & 7711A	1
	P24537	Input Shaft	Spec 7711B	1
8	P18516	Tube		1
	P19443	Tube	Spec 6037 & 7711A ONLY	1
9	P18517	Cover Plate		1
10	P19755	Ring Seal		1
11	P18514	Ring		1
12	P18518	Capscrew		6
13	P18519	Lockwasher		6
14	P19758	Capscrew		1
15	P19444	Washer Thrust Pump		1
16	P18524	Input Hub Gear		1
17	P18525	Gasket	Spec 6037, 7201 & 5800	1
	P24582	Gasket, Plastic Strip	Spec 7711, 8239 & 9673	1
18	P18526	Bearing Retainer		1
19	P18529	Capscrew		7
20	P18530	Lockwasher		7
21	P18531	Elbow		1
22	P18532	Breather		1
	P12034	Breather	Spec 7711, 8239, & 9673	1
23	P18528	Oil Seal		1
24	P18527	Bearing		1
25	P18672	Plug		1
26	P19759	Plug		1
27	P18513	Bearing		1
28	P18522	Bearing Retainer	Spec 7711A & 8239A ONLY	1
	P24579	Bearing Retainer		1
29	P19760	Regulator Valve		1
30	P18520	Capscrew		4
31	P18521	Starwasher		4
32	P19756	O-Ring		1
33	P19757	Oil Passage Cover		1

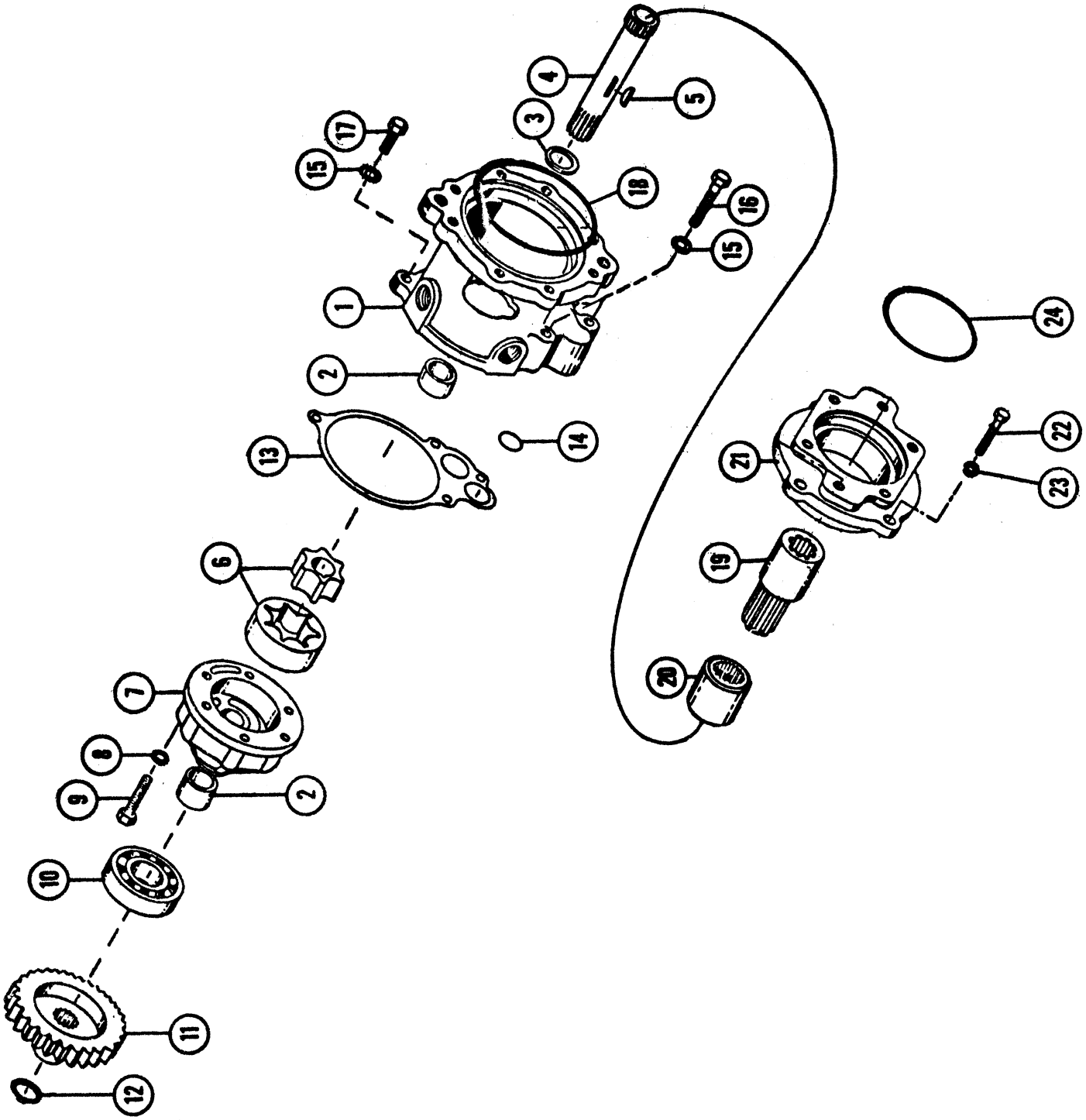

LULL Engineering Co., Inc.
ST. PAUL, MINNESOTA 55121

DRAWING TITLE
PUMP ASSEMBLY

PUBLICATION NUMBER
1813

ITEM	PART NO.	DESCRIPTION	QTY.
	P18004	Pump Assembly (Use P18581 For Spec 5800)	1
1	P18582	Housing	1
2	P19826	Bearing (Use P18583 For Spec 5800)	2
3	P18584	Thrust Washer	1
4	P19827	Drive Shaft (Use P18585 For Spec 5800)	1
5	P19828	Key, Woodruff (Use P18586 For Spec 5800)	1
6	P18587	Gerotor	1
7	P18588	Pump Retainer	1
8	P18702	Starwasher, Ext. 5/16"	6
9	P18589	Capscrew	6
10	P18590	Bearing	1
11	P18591	Gear	1
12	P18592	Retaining Ring	1
13	P18593	Gasket	1
14	P18594	O-Ring	1
15	P18703	Starwasher, 3/8"	4
16	P18595	Capscrew	3
17	P18596	Capscrew	1
18	P18597	O-Ring	1
19	P18598	Adaptor Sleeve, "B"	1
20	P18599	Sleeve Spacer	1
21	P18600	Adaptoe Plate	1
22	P18573	Capscrew	4
23	P18572	Lockwasher	4
24	P18602	O-Ring	1

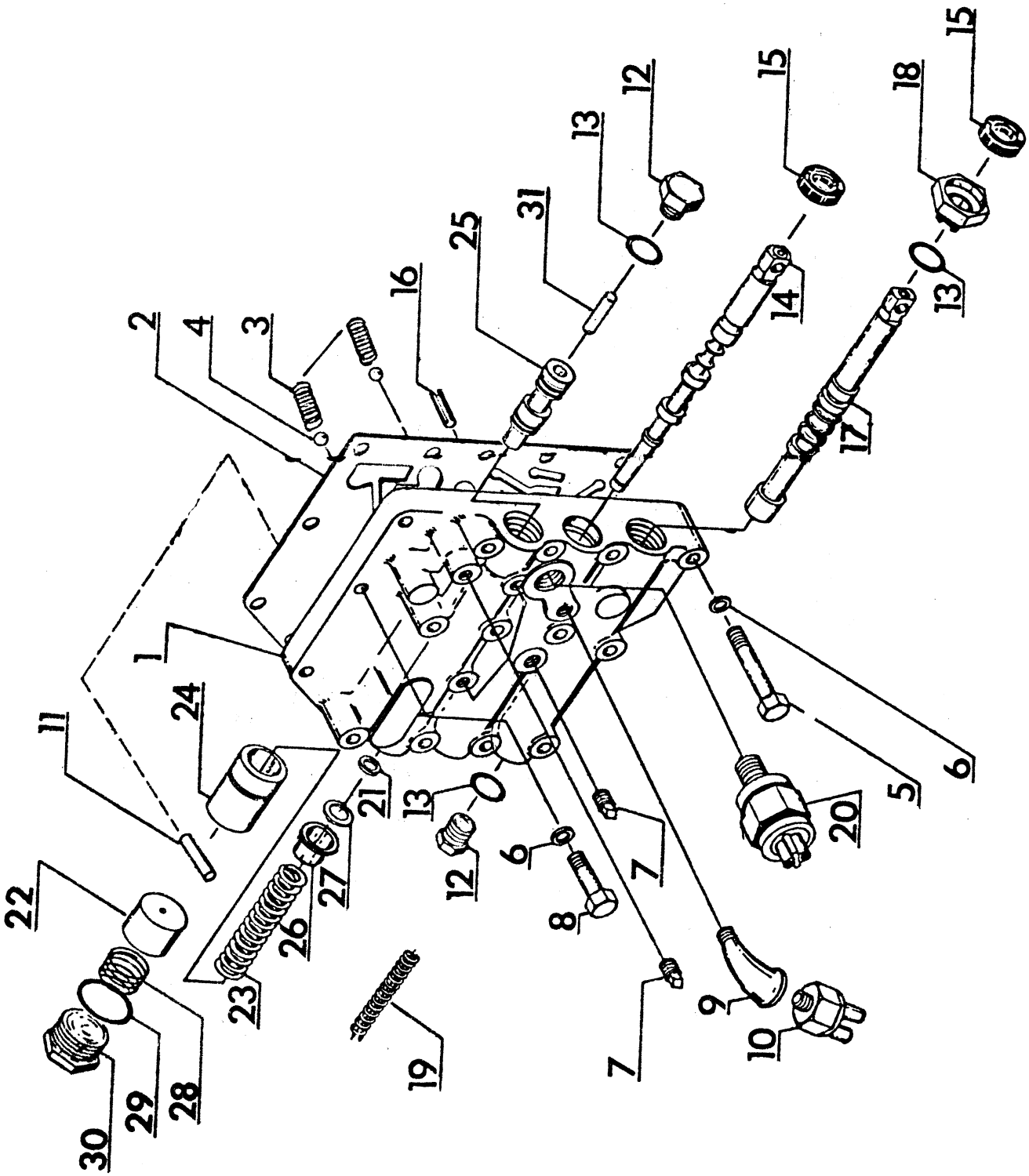

LULL Engineering Co., Inc.	ST. PAUL, MINNESOTA 56121
DRAWING TITLE VALVE CONTROL ASSEMBLY	PUBLICATION NUMBER 1814

ITEM	PART NO.	DESCRIPTION	QTY.
	P18653	Valve Control Assy. Spec 5800, 6037, 7201, 7711A, 8239A	1
	P24530	Valve Control Assy. Spec 7711B, 8239B, 9673	1
1	P18654	Body, Control Valve,Spec 7711A, 8239A,6037,7201,5800	1
	P24529	Body, Control Valve, Spec 7711B,8239B,9673	1
2	P18675	Gasket, Valve Body	1
3	P18676	Spring, Detent	2
4	P18677	Ball	2
5	P22796	Capscrew	12
6	P22799	Flat Washer	15
7	P18672	Plug, Pipe	4
8	P18518	Capscrew	3
9	P19825	45° Elbow, Street	1
10	P19105	Switch, Reverse Alar m - See Note	1
11	P19822	Pin, Use P18657, Snap Ring For Spec 5800	1
12	P18665	Plug	2
13	P18666	O-Ring	3
14	P19823	Stem, Forward - Reverse	1
15	P18668	Oil Seal	2
16	P18669	Roll Pin	1
17	P19824	Stem, Spec 5800,6037 & 7201	1
	P24522	Stem, Spec 7711, 8239 & 9673	1
18	P18671	Plug	1
19	P18662	Spring, Regulator-Spec 7711A,8239A,6037,7201&5800 ONLY	1
20	P18673	Switch, Neutral Safety	1
21	P18674	Spacer, Spring	A/R
22	P18658	Valve, Pump	1
23	P18656	Spring, Accumulator	1
24	P18655	Valve Modulator, Spec 7711A,8239A,6037,7201,5800	1
	P24527	Valve Modulator, Spec 7711B, 8239B, 9673	1
25	P18663	Valve, Regulator, Spec 7711A, 8239A, 6037, 7201, 5800	1
	P24528	Valve, Regulator, Spec 7711B, 8239B, 9673	1
26	P24526	Cap, Regulator, Spec 7711B, 8239B, 9673	1
27	P24599	Washer, Spec 7711B, 8239B, 9673	1
28	P18659	Spring, Pump Valve	1
29	P18661	O-Ring	1
30	P18660	Plug, Pump Valve	1
31	P18664	Dowel Pin	1

NOTE: There is no port on valve for reverse alarm switch on transmission Spec 5800.

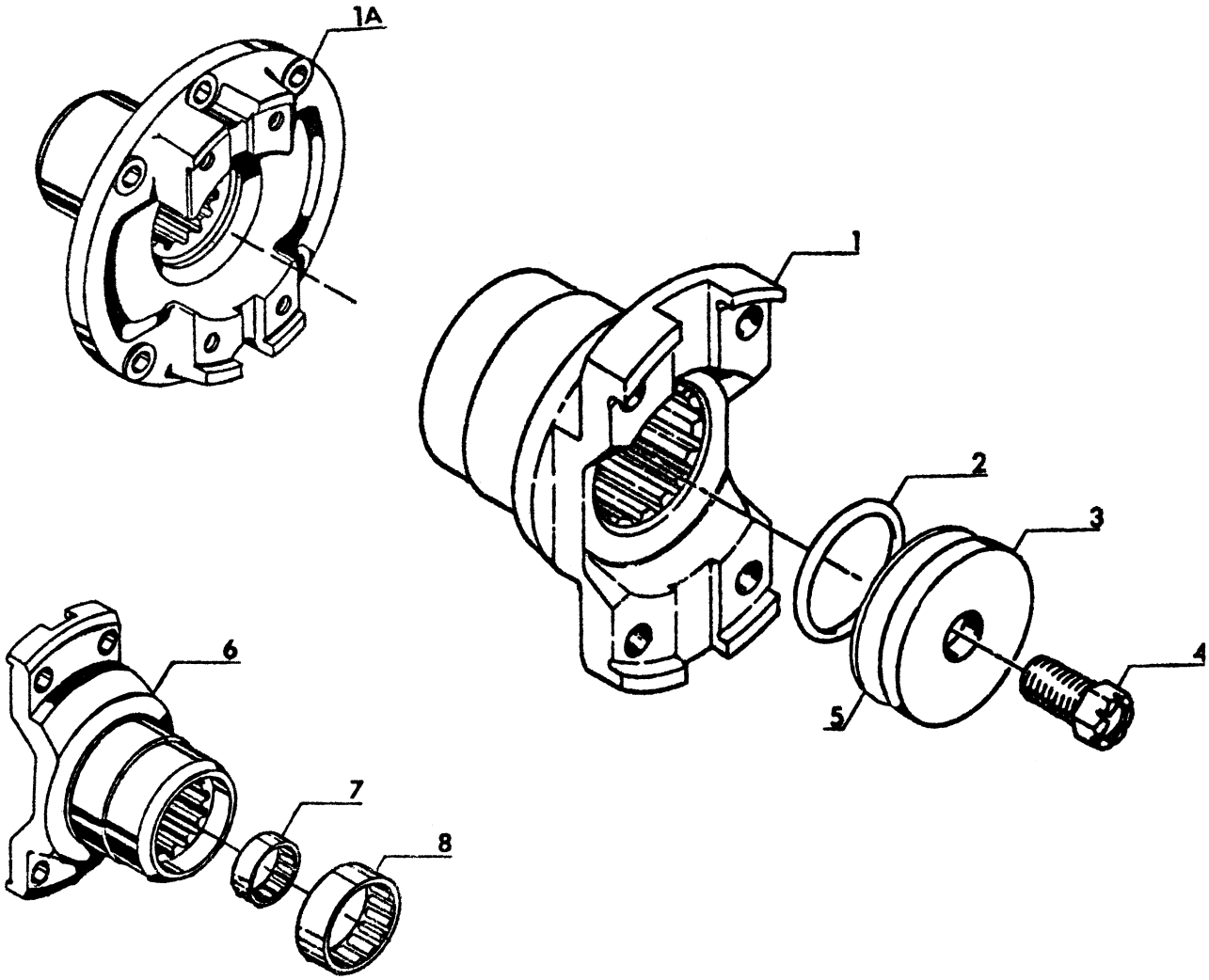

ITEM	PART NO.	DESCRIPTION			QTY
	P18683	Yoke Group Assembly	Spec 5800	6037 & 7201	1
	P20426	Yoke Group Assembly	Spec 7711	8239 & 9673	1
	P25409	Yoke Group Assembly	Spec 9673	only	1
1	P18684	Yoke Flange, Front			1
1A	P25410	Yoke Flange, Front	Spec 9673	only	1
2	P18685	O-Ring			1
3	P18686	Washer	Spec 5800	6037 & 7201	
	P20427	Washer	Spec 7711	8239 & 9673	1
4	P20428	Bolt, Special			1
5	P19820	Shim Package (not shown)			1
6	P20429	Yoke Flange, Rear			1
7	P24457	Bearing			1
8	P24458	Bearing			

YOKE & DRIVE
PLATE ASSEMBLY

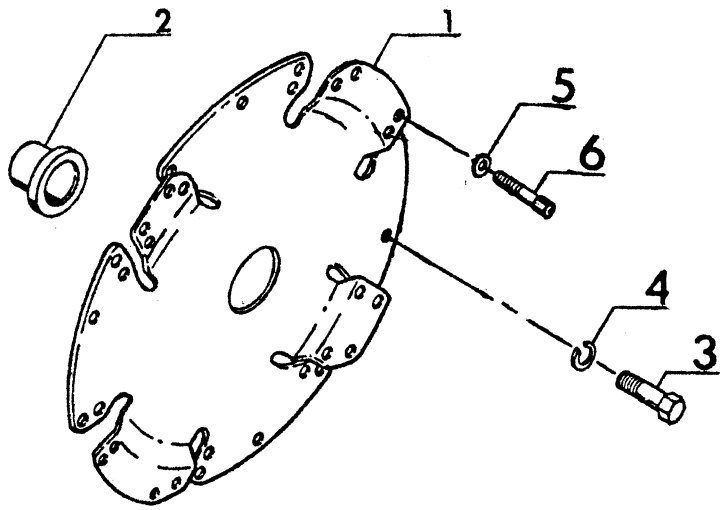

ITEM	PART NO.	DESCRIPTION	QTY.
		Drive Plate Assembly (Incl. Item 2)	
		CHRYSLER ENGINES	
1	P20968	Spec 5800, 7201 & 8239	1
	P20969	Spec 6037 & 7711	1
		WAUKESHA ENGINES	
	P20968	Spec 5800	1
	P19278	Spec 6037 & 7711A	1
	P22802	Spec 7711B & 9673	1
		DETROIT ENGINES	
	P19441	Spec 7201, 8239 & 9673	1
		DEUTZ ENGINES	
	P19278	Spec 7711A	1
	P22802	Spec 7711B & 9673	
		DEERE ENGINES	
	P20968	Spec 8239	1
	P22647	Spec 9673	1
2	(A)	Sleeve Hub	1
3	P18536	Capscrew, 3/8-16 NC x 3/4	8
4	P18530	Lockwasher, 3/8 Medium Spring	8
5	P18537	Washer, Half Round	8
	P22799	Washer, Flat	8
6	P18538(B)	Capscrew, Socket Hd., 5/16-24 NF x 2 3/4 (Nylock)	8
	P19438(C)	Capscrew, Socket Hd., 5/16-24 NF x 1 1/4 (Nylock)	8

ITEMS 3 THRU 6 USED TO BOLT DRIVE PLATE TO CONVERTER

NOTES:

A) CONSULT FACTORY

B) USED WITH 12 3/4" CONVERTERS

C) USED WITH 11 3/4" CONVERTERS

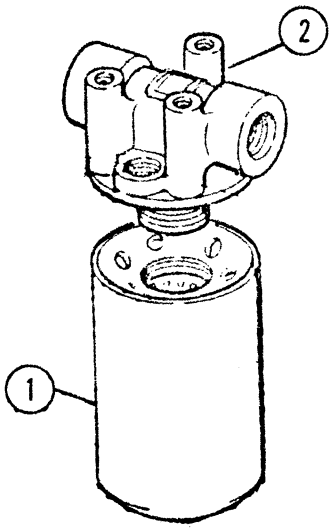

ITEM	PART NO.	DESCRIPTION	QTY.
	P19132	Remote Filter & Base Assembly	1
1.	P19133	Filter	1
2.	P19821	Base	1

LULL Engineering Co., Inc.
ST PAUL, MINNESOTA 55121

DRAWING TITLE
REMOTE FILTER & COVER PLATE ASS'Y

PUBLICATION NUMBER
1816

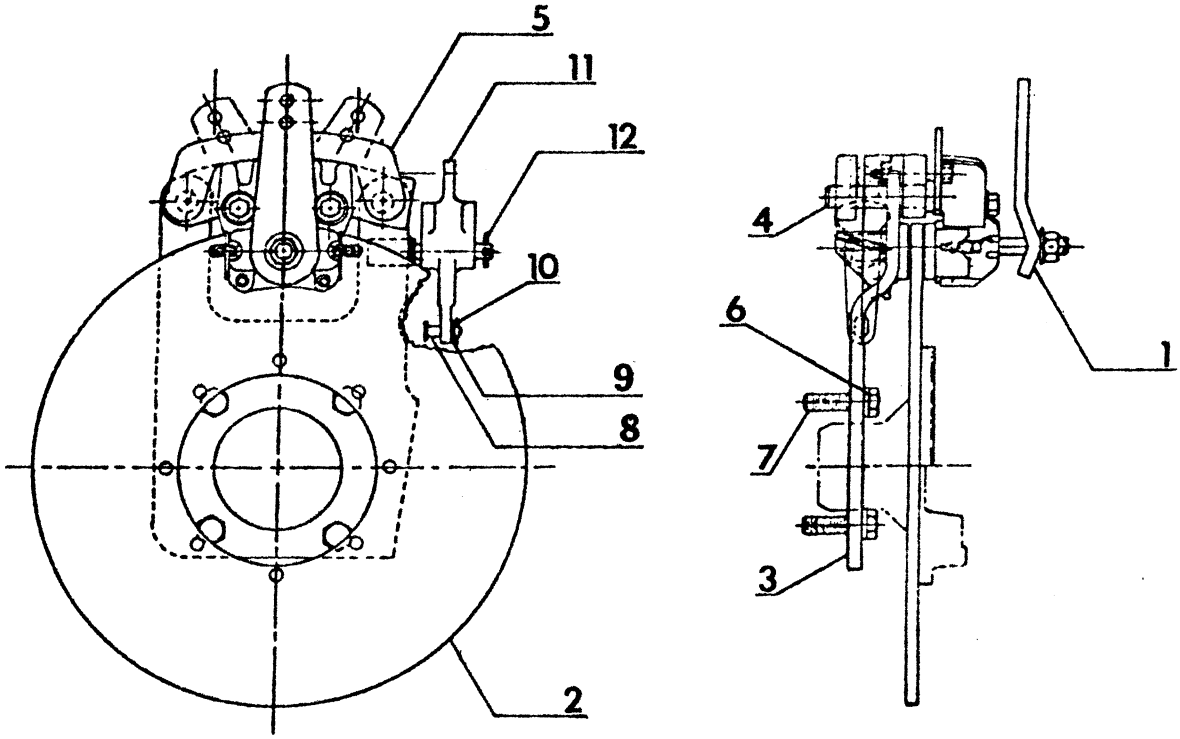

ITEM	PART NO.	DESCRIPTION	QTY.
1	P24539	Brake Caliper W/Pads	1
2	P25075	Disc. Brake	1
3	P25402	Mounting Bracket	1
4	P25424	Pin	2
5	P25403	Retainer, Pin	1
6	P18572	Lockwasher	4
7	P18573	Capscrew	4
8	P25423	Clevis Pin	1
9	P25427	Flatwasher	1
10	P25425	Cotter Pin	1
11	P25404	Lever, Disconnect	1
12	P25426	Cotter Pin	1
13	P24602	Spring, Short	2
14	P24601	Spring, Long	1
15	P24600	Brake Pad	2

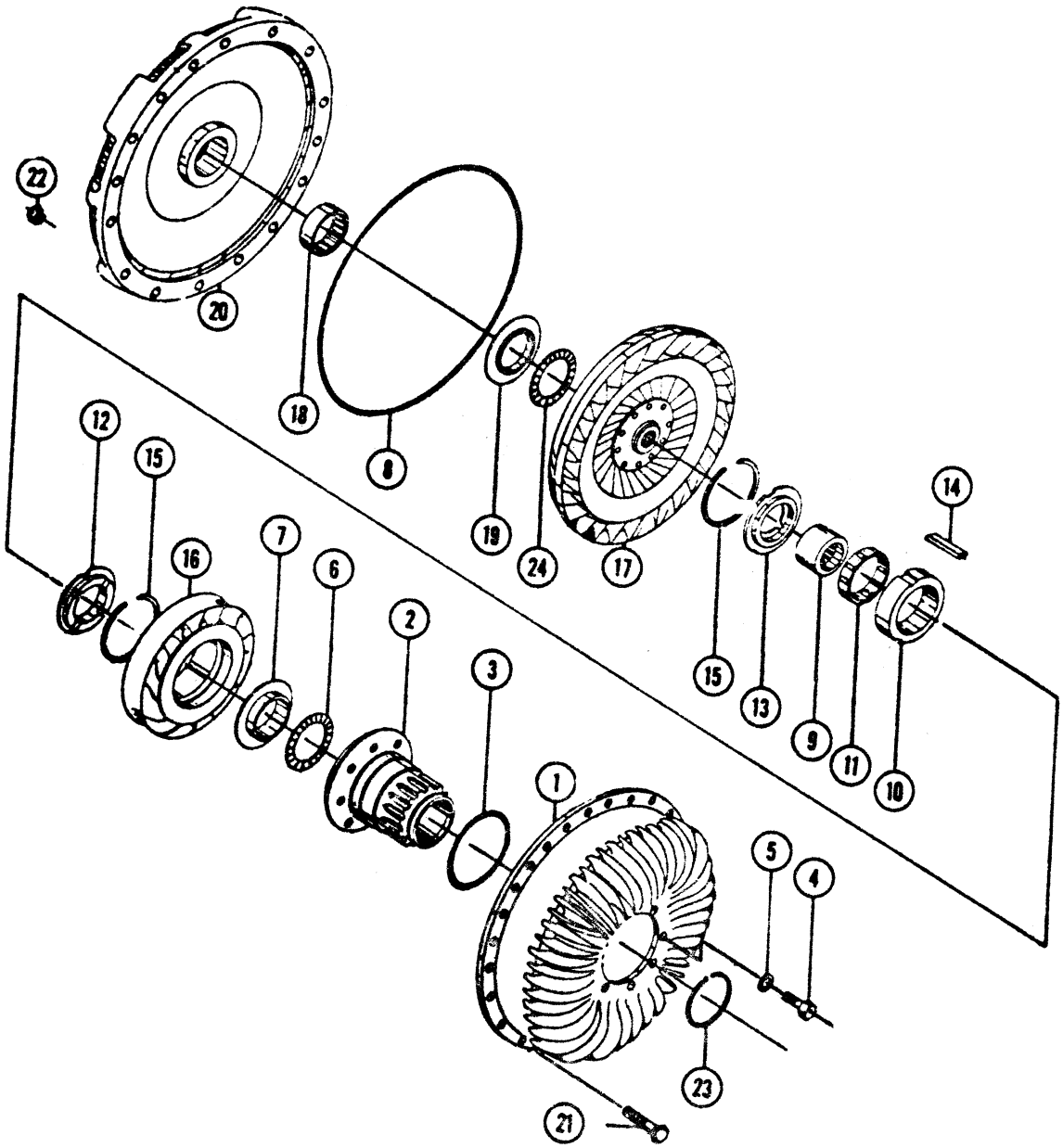

LULL Engineering Co., Inc.
ST. PAUL, MINNESOTA 55121

DRAWING TITLE
CONVERTER ASSEMBLY

PUBLICATION NUMBER
1817

ITEM	PART NO.	DESCRIPTION		QTY.
	P17773	Converter Assembly	Spec 5800	1
	P19439	Converter Assembly	Spec 7201	1
	P20647	Converter Assembly	Spec 8239A & 8239B Spec 9673 (Detroit Only)	1
1	P18539	Impeller		1
2	P18540	Hub		1
	P20734	Hub (Use w/P20647 Assy. Only)		1
3	P18541	O-Ring		1
4	P18542	Capscrew		12
5	P18543	Seal Washer		12
6	P18544	Bearing		2
7	P18545	Thrust Washer, Rear		1
8	P18546	O-Ring Gasket		1
9	P18547	Inner Race Clutch		1
10	P18548	Outer Race Clutch		1
11	P18549	Clutch Sprag		1
12	P18550	Clutch Retainer, Rear		1
	P20736	Clutch Retainer, Rear (Use W/P20647 Assy.Only)		1
13	P18551	Clutch Retainer, Front		1
14	P18552	Key, Square		4
15	P18553	Snap Ring		2
16	P18554	Stator		1
17	P19762	Turbine		1
18	P18556	Bearing		1
19	P18557	Thrust Washer		1
20	P18558	Front Cover (Use W/P17773 Assy. Only)		1
	P19761	Front Cover		1
21	P18559	Capscrew		16
22	P18560	Flanged Nut		16
23	P18561	Ring Seal (Use W/P17773 Assy. ONLY)		1
	P19466	Ring Seal		1
24	P20742	Bearing		1

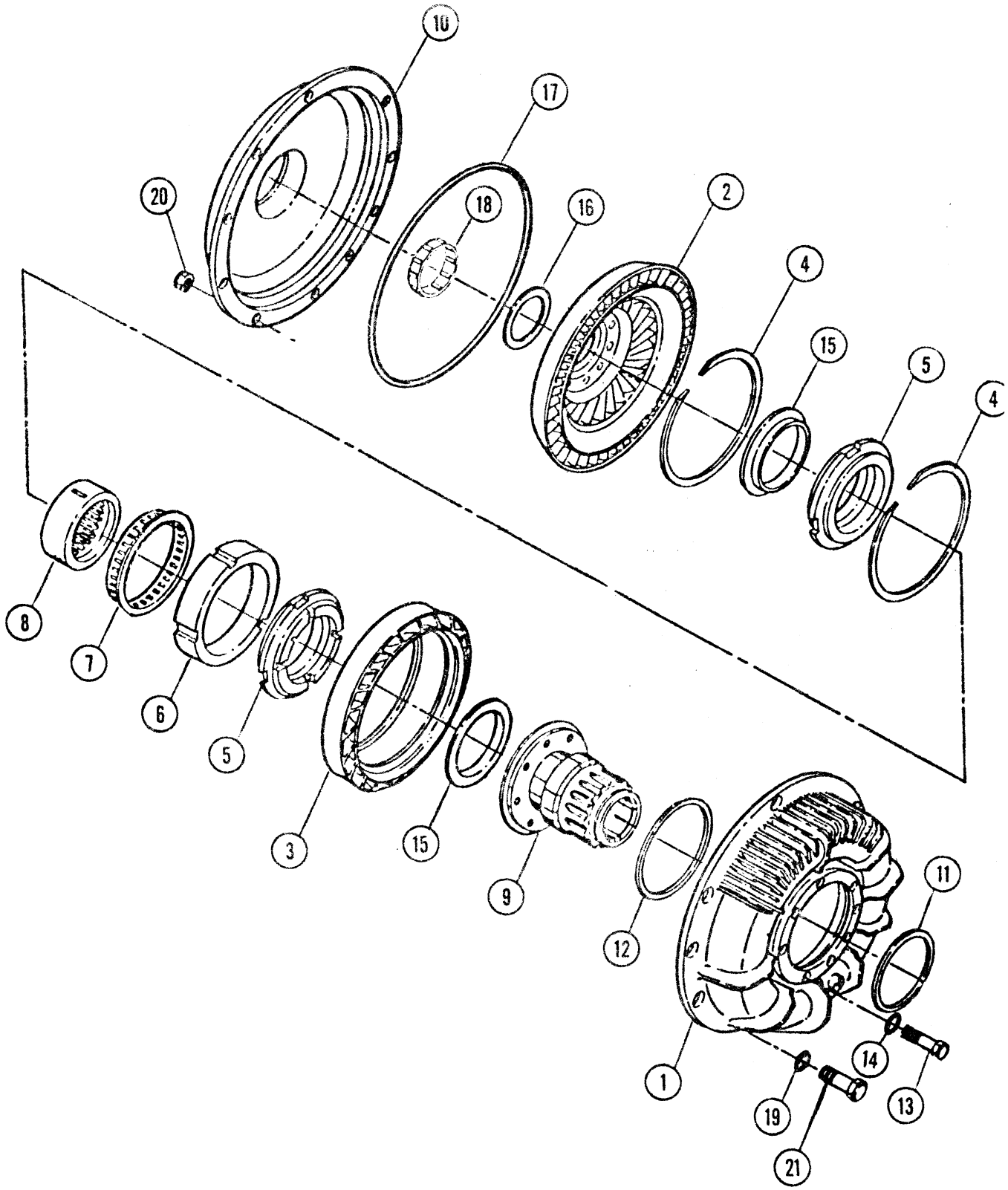

LULL Engineering Co., Inc.
ST. PAUL, MINNESOTA 55121

DRAWING TITLE
CONVERTER ASSEMBLY

PUBLICATION NUMBER
1818

ITEM	PART NO.	DESCRIPTION		QTY.
	P19434	Converter Assembly	Spec 6037 & 7711A	1
1	P19454	Impeller		1
2	P19457	Turbine		1
3	P19450	Stator		1
4	P19451	Retaining Ring		2
5	P19449	Retainer, Stator		2
6	P19446	Outer Race		1
7	P19447	Clutch Sprag		1
8	P19448	Inner Race		1
9	P19452	Hub, Impeller		1
10	P19459	Converter Cover		1
11	P19466	Seal Ring		1
12	P19453	Seal Ring		1
13	P19455	Capscrew		8
14	P19456	Lockwasher		8
15	P19458	Thrust Washer		2
16	P20649	Thrust Washer		1
17	P19460	O-Ring		1
18	P19467	Bearing		1
19	P19464	Washer		10
20	P19462	Lock Nut		10
21	P19461	Capscrew		10

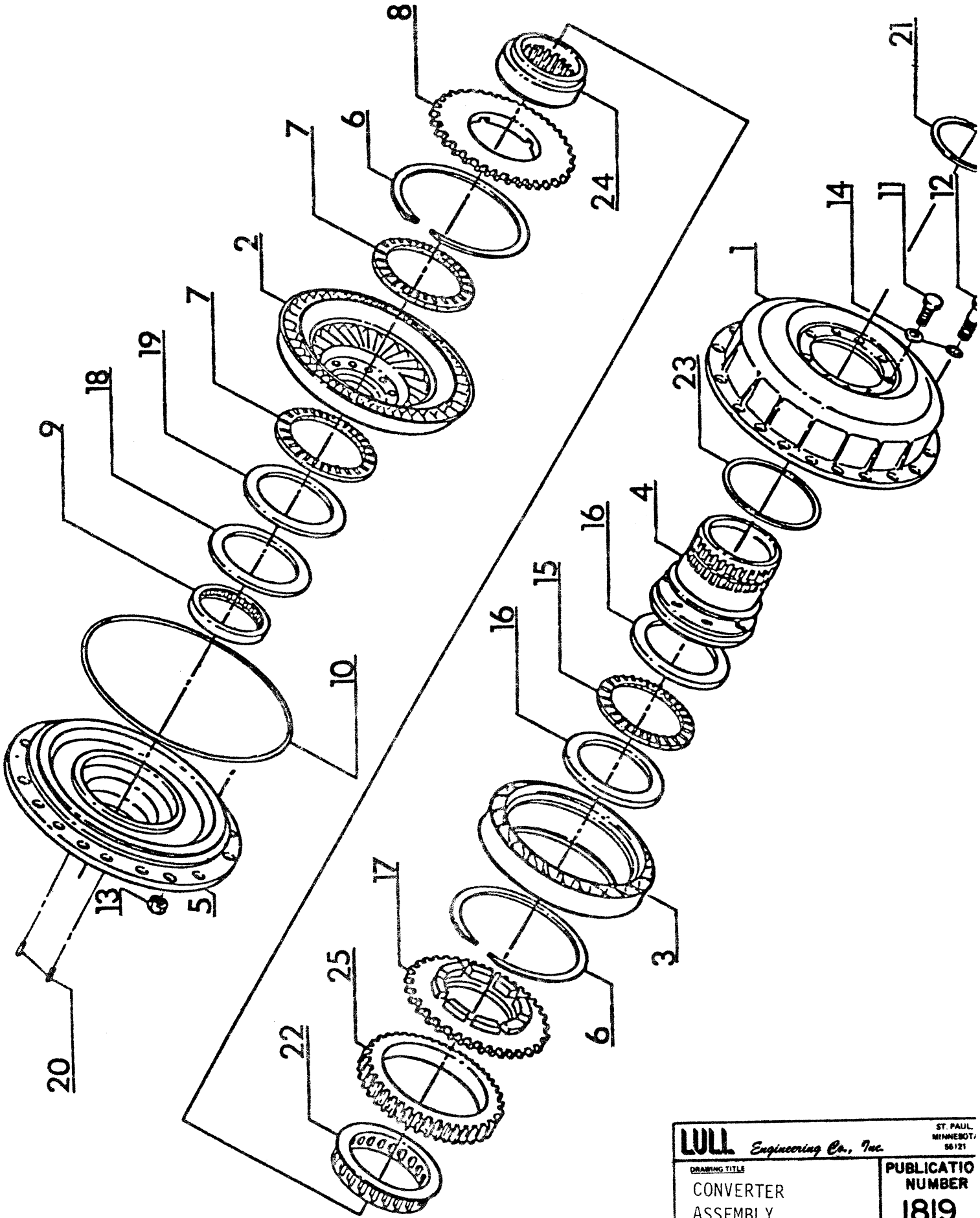

LULL Engineering Co., Inc.
ST. PAUL, MINNESOTA 55121

DRAWING TITLE
CONVERTER ASSEMBLY

PUBLICATION NUMBER
1819

ITEM	PART NO.	DESCRIPTION		QTY.
	P22803	Conveter Assembly	Spec 7711B & 9673	1
1	P24506	Impeller		1
2	P24508	Turbine		1
3	P22727	Stator		1
4	P24507	Impeller Hub		1
5	P22731	Cover		1
6	P22774	Retaining Ring		2
7	P22756	Thrust Bearing		2
8	P22729	Retainer		1
9	P22750	Bearing		1
10	P22730	Seal		1
11	P22789	Capscrew		8
12	P22790	Capscrew		12
13	P18560	Nut, Hex		12
14	P22799	Flatwasher		20
15	P18544	Thrust Bearing		1
16	P22758	Thrust Race		2
17	P22733	Retainer		1
18	P22759	Thrust Race		1
19	P22760	Thrust Race		1
20	P24470	Roll Pin		2
21	P19466	Ring Seal		1
22	P18549	Clutch Sprag		1
23	P22762	O-Ring		1
24	P24509	Race, Inner		1
25	P22728	Race, Outer		1

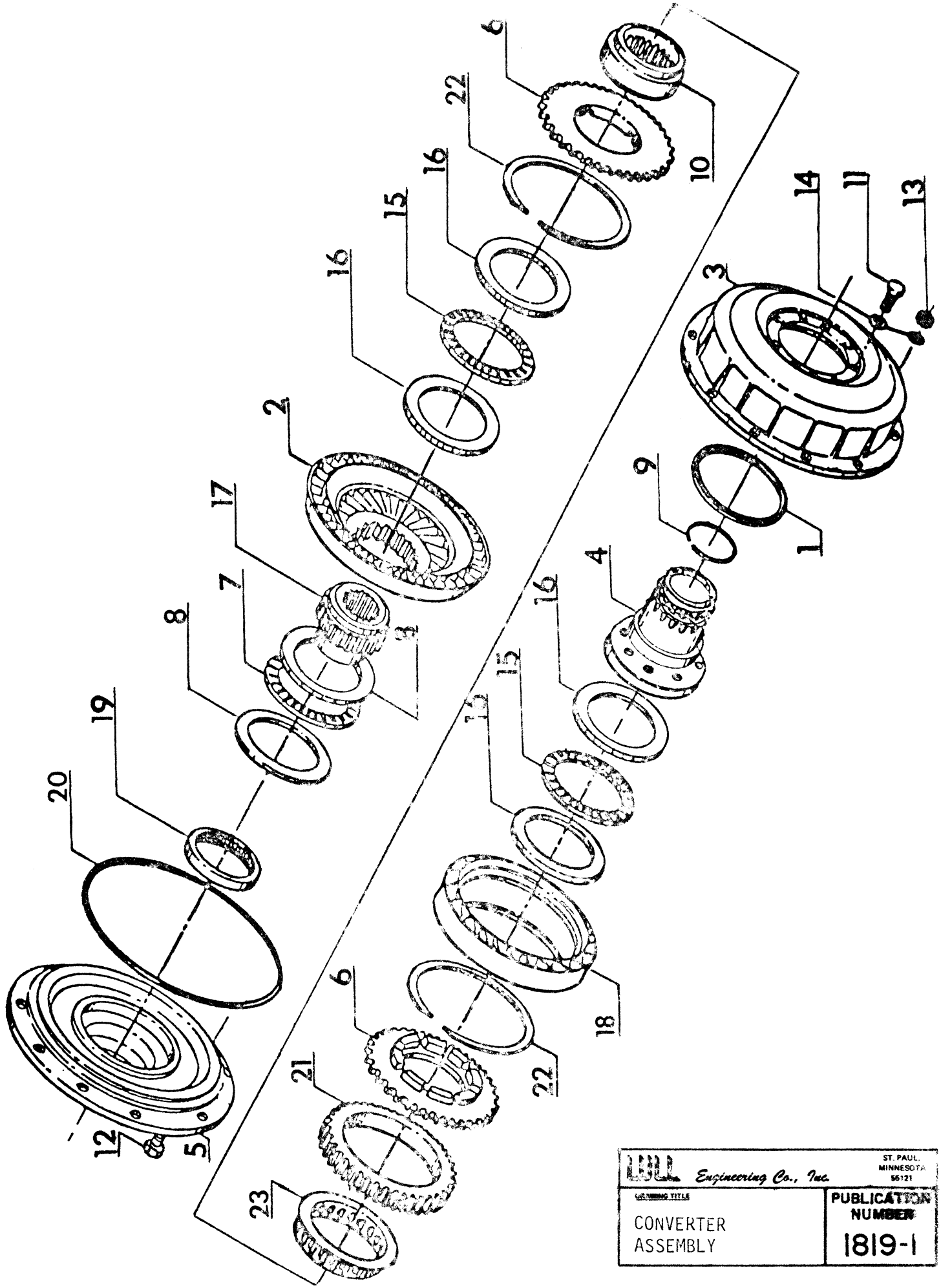

LULL Engineering Co., Inc.

ST. PAUL, MINNESOTA 55121

DRAWING TITLE

CONVERTER ASSEMBLY

PUBLICATION NUMBER

1819-1

ITEM	PART NO.	DESCRIPTION	QTY.
	P22803	Complete Converter Assembly Spec 9673C	1
1	P22762	O-Ring	1
2	P25414	Turbine	1
3	P25433	Impeller	1
4	P25434	Hub, Impeller	1
5	P22731	Cover	1
6	P25416	Clutch Retainer	2
7	P22756	Thrust Bearing	1
8	P22760	Thrust Race	2
9	P18561	Ring Seal	1
10	P24509	Inner Race	1
11	P22789	Capscrew	8
12	P18518	Capscrew	12
13	P25430	Nut, Hx.	12
14	P22648	Flatwasher	20
15	P25431	Thrust Bearing	2
16	P25417	Thrust Washer	4
17	P25435	Hub, Turbine	1
18	P25418	Stator	1
19	P22750	Bearing	1
20	P22730	Seal	1
21	P25413	Outer Race	1
22	P25408	Retaining Ring	2
23	P18549	Clutch Sprag	1

SERVICE PARTS
P19383 & P19366
HYDRAULIC STEERING CYLINDER (LANTEX)

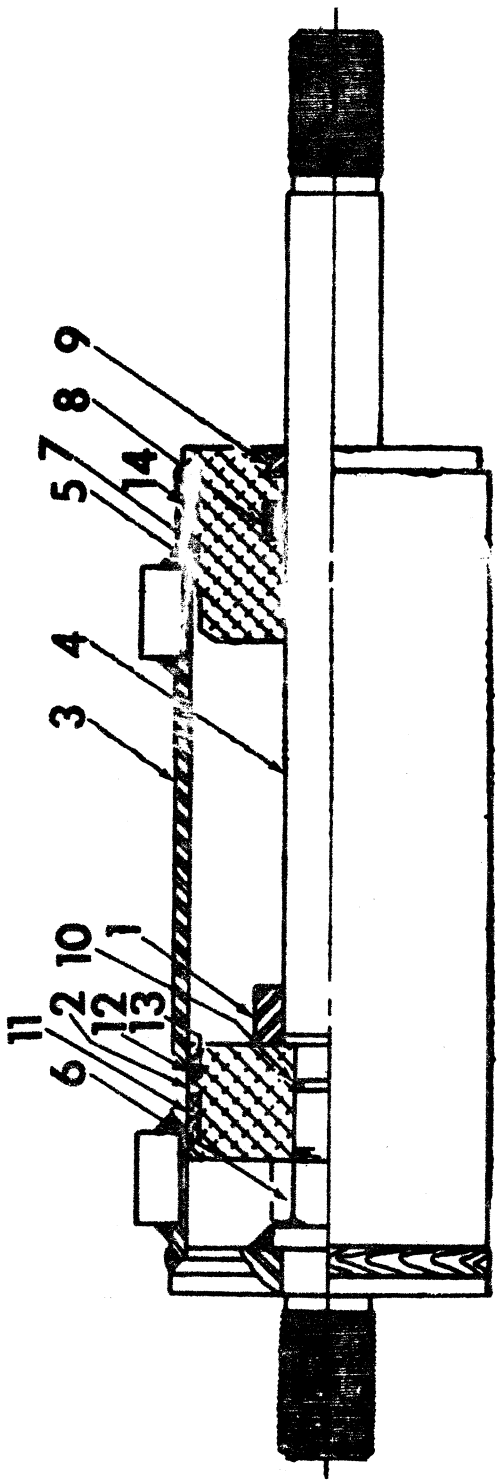

1787

P19366 HYDRUALIC CYLINDER ASSEMBLY (LANTEX)

P19383 HYDRAULIC CYLINDER ASSEMBLY (LANTEX)

ITEM	DESCRIPTION	QUANTITY A	QUANTITY B	PART NO.
	COMPLETE HYDRAULIC CYLINDER ASSEMBLY – (LANTEX) 4-5/8" Stroke, 17-7/16" Collasped Length	1		P-19383
	4-5/8" Stroke, 19-7/8" Collasped Length		1	P-19366
1	Spacer	1	1	P-19367
2	Piston	1	1	P-19368
3	Barrel Assembly	1	1	P-19369
4	Rod 19-7/8" / 17-7/16"	1	1	P-19370/P-19371
5	Gland	1	1	P-19372
6	Locknut, Self-Locking	1	1	P-19373
7**	Gland Static Seal	1	1	P-19374
8**	Rod Seal	1	1	P-19375
9**	Rod Wiper	1	1	P-19376
10**	Rod Static Seal	1	1	P-19377
11**	Wear Ring	1	1	P-19378
12**	Piston Seal	1	1	P-19379
13**	O-Ring	1	1	P-19380
14**	Lockwire	1	1	P-19381
	Seal Kit Assembly – Consists of Items 7 thru 14	1	1	P-19382
*	NOT ILLUSTRATED ITEMS			
**	Items Included in Seal Kit Assembly			

NOTE: Quanity indicated is for (1) Hydraulic Cylinder Assembly Only

P19146 CALIPER ASSEMBLY – MECHANICAL

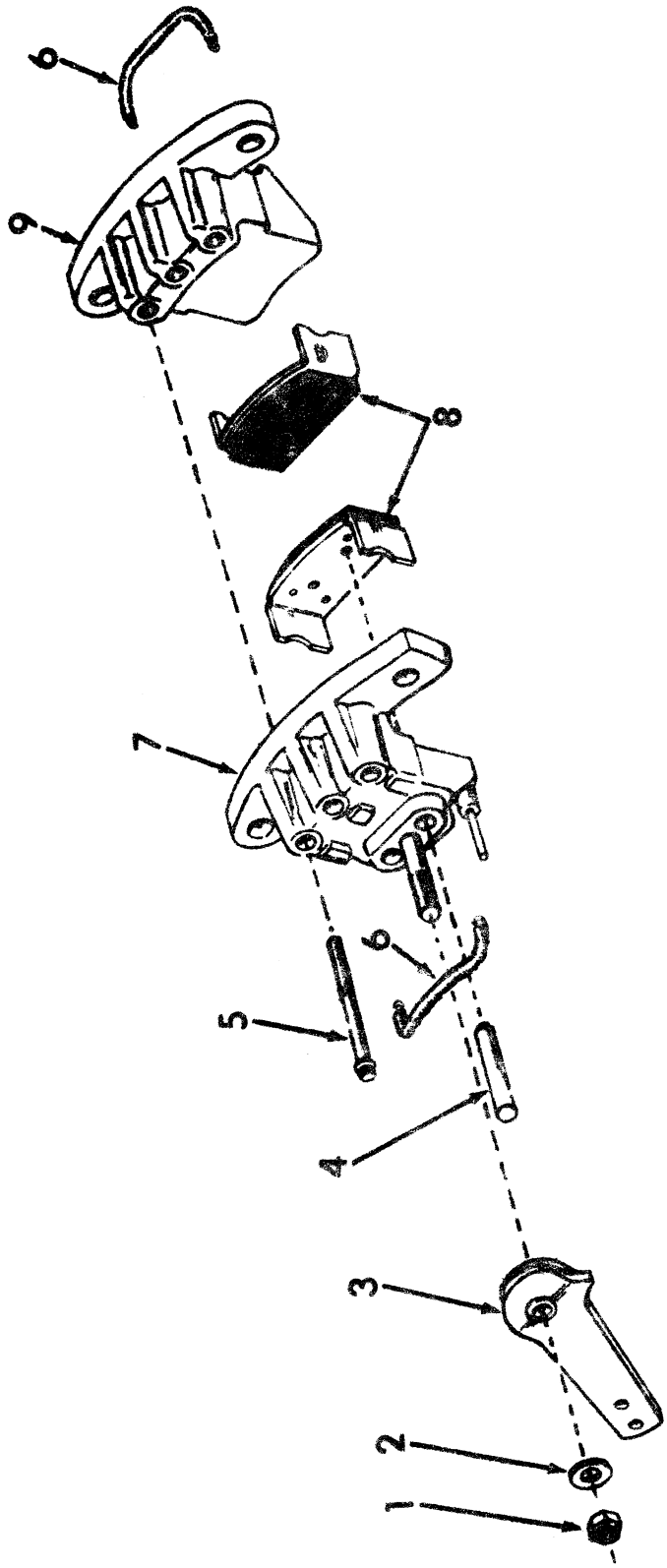

DISASSEMBLY

Remove 1/2" locknut (item 1), 1/2" flat washer (item 2), lever arm (item 3) from stud. Remove springs (item 6) from brake clip on sides of pad and holder assemblies (item 8). Slide pins out (item 4) from housing (item 7, 9). To separate housing (item 7, 9) remove three flanged bolts (item 5).

REASSEMBLY

Reassemble in reverse order of disassembly.

P19146 CALIPER ASSEMBLY – MECHANICAL

ITEM	DESCRIPTION	QUANTITY A	QUANTITY B	PART NO.
	COMPLETE CALIPER ASSEMBLY – MECHANICAL	1		P-19146
	NOTE: Quantity indicated is for one (1) complete caliper assembly only			
1	Locknut, 1/2"	1		P-19153
2	Washer, – Flat, 1/2"	1		P-19152
3	Lever	1		P-19151
4	Pin	2		P-19154
5	Bolt – Flanged, 3/8"	3		P-19156
6	Spring	2		P-19155
7	Housing with Stud	1		P-19149
8	Pad and Holder Assembly	1		P-19150
9	Housing	1		P-19148
*	NOT ILLUSTRATED ITEMS			
LH	Left Hand			
RH	Right Hand			

P19145 DISC BRAKE CALIPER ASSEMBLY – BRAKE FLUID

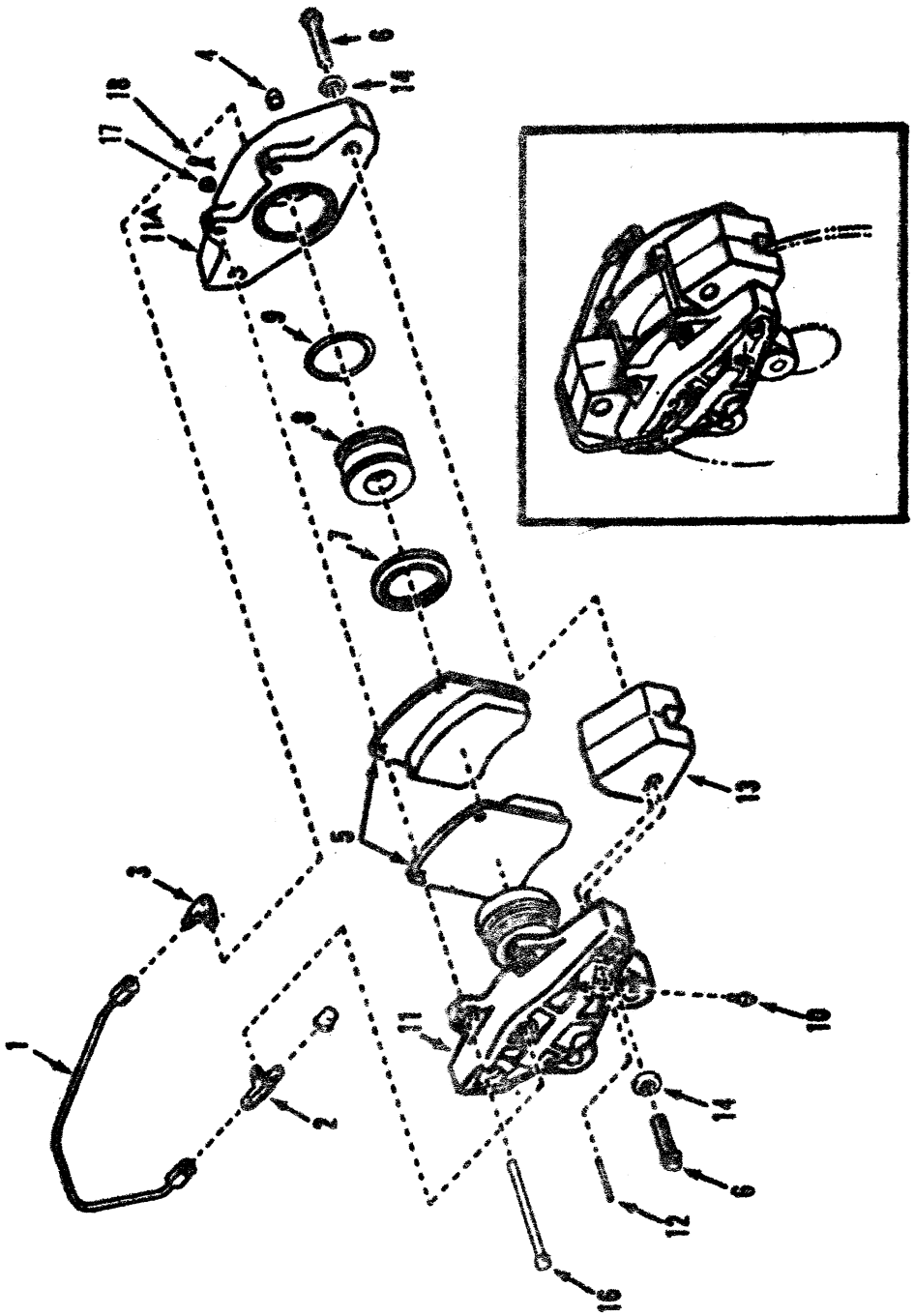

P19145 BRAKE CALIPER ASSEMBLY

ITEM	DESCRIPTION	QUANTITY A	QUANTITY B	QUANTITY C	QUANTITY D	PART NO.
	COMPLETE BRAKE CALIPER ASSEMBLY (RED TAG					
	BRAKE FLUID) NOTE: QUANTITY INDICATED IS					
	FOR ONE COMPLETE BRAKE CALIPER ASSEMBLY					
	(LH) OR (RH)	1				P-19145
1	Transfer Line Assembly	1				P-19166
2	Tee-Male Branch	1				P-19168
3	Elbow – Male	1				P-19167
4	Reducer	2				P-19179
5	Pad & Holder Assembly	2				P-19159
6	Screw, 12 PT., 7/16" 14 X 1.50"	4				P-19181
7	Dust Boot	2				P-19162
8	Piston	2				P-19163
9	O-Ring	2				P-19164
10	Bleeder Valve	4				P-19161
11	Housing Piston with Ears	1				P-19158
11A	Housing Piston without Ears	1				P-19157
12	Pin – Drive Lock	2				P-19180
13	Spacer	2				P-19160
14	Washer, Flat, Screw Backup	4				P-19182
* 15	Bleeder Valve	2				P-19178
16	Pin – Pad Retainer	2				P-19176
17	Washer – Flat	2				P-19165
18	Pin – Cotter	2				P-19177
*	Label Brake Fluid, Red Tag	1				
*	NOT ILLUSTRATED ITEMS					
LH	Left Hand					
RH	Right Hand					

SERVICE PARTS
NO. 53186, NO. 53187
PS-1200 PLANETARY STEERING AXLE ASSEMBLY

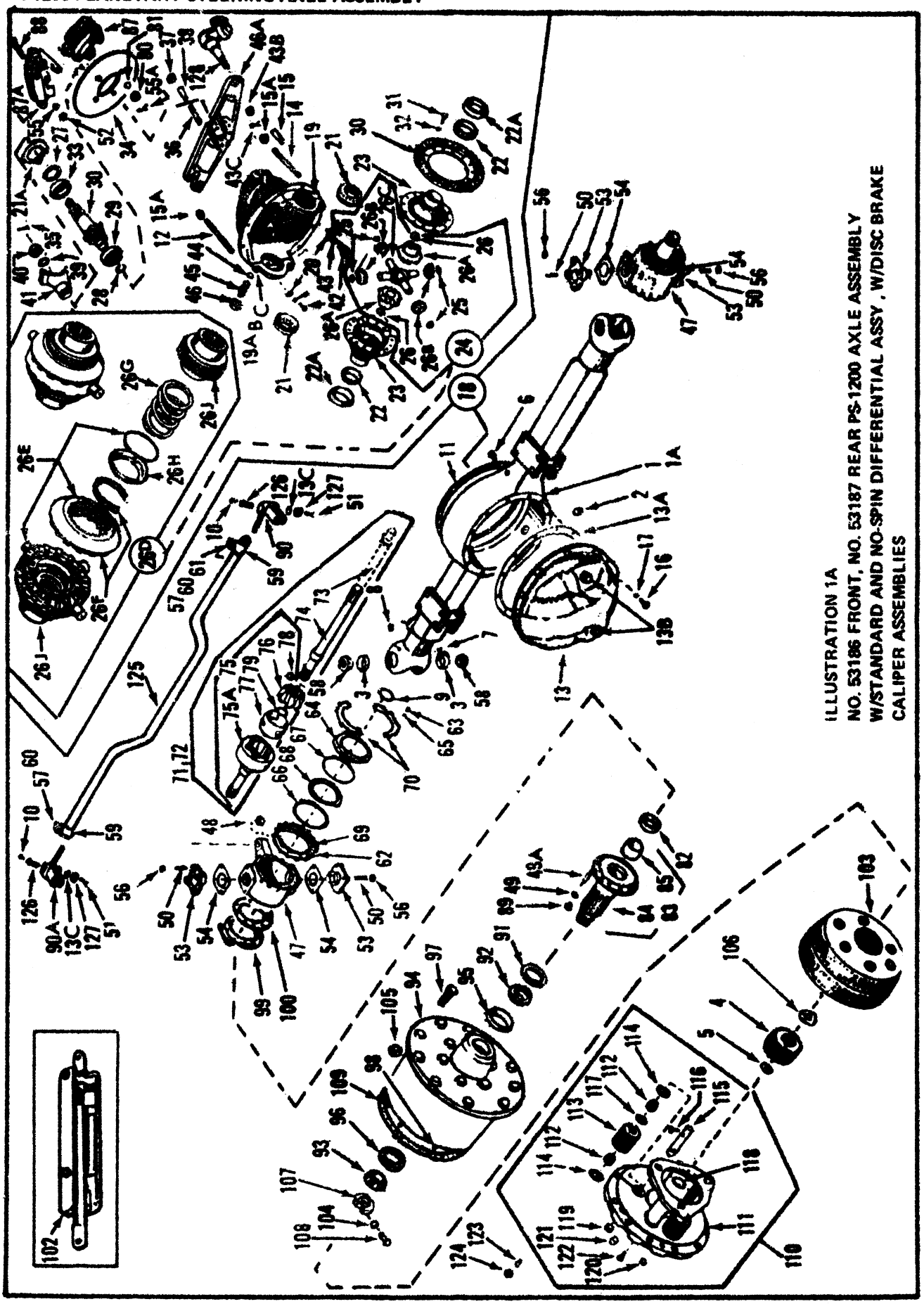

ILLUSTRATION 1A
NO. 53186 FRONT, NO. 53187 REAR PS-1200 AXLE ASSEMBLY
W/STANDARD AND NO-SPIN DIFFERENTIAL ASSY, W/DISC BRAKE
CALIPER ASSEMBLIES

ITEM	DESCRIPTION	QUANTITY A (NO. 53186 PS-1200 PLANETARY STEERING AXLE ASSY. W/NO-SPIN DIFFERENTIAL ASSEMBLY)	QUANTITY B (NO. 53187 PS-1200 PLANETARY STEERING AXLE ASSY. W/STANDARD DIFFERENTIAL ASSEMBLY)	PART NO.
	COMPLETE PS-1200 PLANETARY STEERING AXLE ASSEMBLY (Front)			
	W/NO-SPIN DIFFERENTIAL ASSEMBLY, W/HEAVY DUTY 22°			
	BALL ENDS	1		P-18068
	COMPLETE PS-1200 PLANETARY STEERING AXLE ASSEMBLY (Rear)			
	W/STANDARD DIFFERENTIAL ASSEMBLY, W/HEAVY DUTY 22°			
	BALL ENDS		1	P-18069
1	Axle Housing Weldment (Front)	1		P-19296
1A	Axle Housing Weldment (Rear)		1	P-19297
2	Plug – Magnetic Drain, 1/2"-14	1	1	P-13780
3	Cup – Bearing	4	4	P-19298
4	Gear – Sun	2	2	P-13782
5	Ring – Retaining	2	2	P-13783
6	Vent – Axle Air	1	1	P-13784
7	Plug – Ball End Grease, 3/8" NPT	2	2	P-13785
8	Fitting – Lubrication, 1/8" NPT Straight	2	2	P-13786
9	Seal – Oil, Axle Shaft	2	2	P-13787
10	Fitting – Grease, 1/4"-28 (Tie Rod)	2	2	P-13788
**11	Gasket – Differential Carrier	1	1	P-13789
12	Stud – Carrier Mounting, 7/16"-14 X 7/16"-20 X 1.88"	6	6	P-17535
13	Cover – Differential Assembly	1	1	P-13791
**13A	Gasket – Differential Cover	1	1	P-19299
13B	Plug – Square Socket, 3/4" 14 (Steel)	2	2	P-19300
13C	Washer – Flat, 5/8"	2	2	P-19306
14	Stud – Carrier Mounting, 7/16" 14 X 7/16"-20 X 2.25"	4	4	P-13795
15	Dowel – Tapered, Carrier Mounting	4	4	P-19307
15A	Locknut – Carrier Mounting, 7/16"-14 (Grade 8)	10	10	P-17537
16	Bolt – Differential Cover Mounting, 7/16"-20 X 1.00", Hex, (Grade 5PH)	10	10	P-19308
17	Lockwasher – Differential Cover Mounting Bolt, 7/16", P, Regular			
	Spring	10	10	P-13797
18	Complete Carrier Assembly (6.17:1 Ratio) – Consists of Indented Items			

NO. 53187 PS-1200 PLANETARY STEERING AXLE ASSY. W/STANDARD DIFFERENTIAL ASSEMBLY

NO. 53186 PS-1200 PLANETARY STEERING AXLE ASSY. W/NO-SPIN DIFFERENTIAL ASSEMBLY

ITEM	DESCRIPTION	QUANTITY A	QUANTITY B	PART NO.
	19 thru 23, 26D thru 46A	1		P-19342
18	Complete Carrier Assembly (6.17:1 Ratio) – Consists of Indented Items			
	19 thru 26C, 27 thru 46A		1	P-19343
19	Carrier Housing & Cap Assembly	1	1	P-13799
19A	Bolt – Hex, 5/8" - 11 X 3.25" (Grade 8PH)	4	4	P-19309
19B	Dowel	4	4	P-13803
19C	Lockwasher, 5/8", P, Regular Spring	4	4	P-13804
20	Lock – Differential Bearing Adjusting Nut	2	2	P-13805
21	Locknut – Differential Side Bearing	2	2	P-13806
21A	Gasket	1	1	P-13794
22	Cone – Differential Side	2	2	P-17185
22A	Cup – Differential Side	2	2	P-17186
23	Differential Case & Cover Assembly	1	1	P-13808
24	Complete Differential Assembly – Standard, Consists of Indented			
	Items 25 thru 26C		1	P-17142
25	Washer – Thrust		4	P-17144
26	Washer – Thrust		2	P-17145
26A	Gear – Side		2	P-19310
26B	Gear – Pinion		4	P-19311
26C	Spider		1	P-19312
26D	Complete No-Spin Differential Assembly – Consists of Indented Items			
	26E thru 26J	1		P-19344
26E	Spider Assembly – Consists of Spider, Center Cam, Snap Ring			
	which are not serviced separately	1		P-19345
26F	Clutch & Holdout Ring Assembly – Consists of Clutch Member			
	& Holdout Ring which are not serviced separately	2		P-19346
26G	Spring	2		P-19347
26H	Spring Retainer	2		P-19348
26J	Side Gear	2		P-19349
27	Seal Oil	1	1	P-13841
28	Ring – Lock	1	1	P-13811

NO. 53187 PS-1200 PLANETARY STEERING AXLE ASSEMBLY W/STANDARD DIFFERENTIAL ASSEMBLY

NO. 53186 PS-1200 PLANETARY STEERING AXLE ASSY. W/NO-SPIN DIFFERENTIAL ASSEMBLY

ITEM	DESCRIPTION	QUANTITY A	QUANTITY B	PART NO.
29	Bearing – Roller, Pinion Shaft (Rear)	1	1	P-13812
30	Ring Gear & Pinion Assembly (6.17:1 Ratio)	1	1	P-13813
31	Bolt – Hex, Differential Ring Gear, 1/2" - 20 X 2.00" (Grade 7)	12	12	P-13814
32	Lockwasher – Ring Gear Bolt, 1/2", P, Heavy Spring	12	12	P-13815
33	Bearing – Ball, Pinion Shaft (Front)	1	1	P-13816
34	Disc – Brake	1	1	P-19350
35	Cotter Pin – Pinion Nut, 1/8" X 1.75"	1	1	P-13818
36	Stud – Steering Cylinder & Caliper Mounting Bracket, 5/8"-11 & 5/8" 18 X 2.53"	6	6	P-19351
37	Nut – Hex, 5/8" - 18 (Grade 2Z)	6	6	P-13820
38	Dowel – Tapered	6	6	P-13821
39	Washer	1	1	P-13822
40	Nut – Pinion, 1 1/8"-18, Hex	1	1	P-13823
41	Yoke – Brake	1	1	P-19352
42	Bolt – Bearing Adjusting Nut Lock, 5/16"- 18 X 0.62" (Grade 5PH)	2	2	P-19313
43	Lockwasher, Lock Bolt, 5/16", P, Regular Spring	2	2	P-13826
43B	Locknut, 1/2" - 20 (Grade 8)	4	4	P-13842
43C	Cotter Pin, 1/8" X 1.25", P	4	4	P-13835
44	Pad – Thrust	1	1	P-13827
45	Screw – Thrust Pad	1	1	P-13828
46	Nut – Thrust Pad Screw, 7/8"-14 Jam	1	1	P-13829
46A	Stud & Caliper Mounting Assembly (Front)	1	1	P-19353
47	Housing – Steering Knuckle (LH & RH)	2	2	P-19314
48	Bushing – Housing, Steering Knuckle (LH & RH)	2	2	P-19315
49	Washer – Clipped, 7/16"	24	24	P-19355
49A	Stud – Spindle to Knuckle, 7/16"-14 & 7/16"-20 X 2.00"	24	24	P-13833
50	Stud – Trunnion to Knuckle, 1/2"-13 & 1/2"-20 X 2.00"	16	16	P-13834
51	Cotter Pin, 1/8" X 1.25" Long (Tie Rod Bolt)	2	2	P-13835
52	Locknut, 1/2"-13 (Grade 8)	2		P-19356
53	Trunnion	4	4	P-19317

NO. 53187 PS-1200 PLANETARY STEERING AXLE ASSY. W/STANDARD DIFFERENTIAL ASSEMBLY

NO. 53186 PS-1200 PLANETARY STEERING AXLE ASSY. W/NO-SPIN DIFFERENTIAL ASSEMBLY

ITEM	DESCRIPTION	QUANTITY A	QUANTITY B	PART NO.
54	Shim – Knuckle Bearing (.005" Thick)	AR	AR	P-13839
54	Shim – Knuckle Bearing (.010" Thick)	AR	AR	P-13840
55	Washer – Flat	2		P-19357
55A	Cotter Pin, 1/8" X 1.50" P	2	2	P-19358
56	Locknut, 1/2"-20 (Grade 8)	16	16	P-13842
57	Lockwasher, 5/8", P, Regular Spring (Tie Rod Clamp Bolt)	2	2	P-13843
58	Cone – Bearing	4	4	P-19318
59	Clamp – Tie Rod	2	2	P-13845
60	Bolt – Hex Head, 5/8"-11 X 2.25" Long (Grade 5PH), (Tie Rod Clamp Mounting)	2	2	P-19319
61	Nut – Hex, 5/8"-11 (Grade 2P) (Tie Rod Clamp Bolt)	2	2	P-13847
62	Gasket – Knuckle	2	2	P-13848
63	Bolt – Retainer, 5/16"-18 X 0.62" (Grade 2PH)	24	24	P-19321
64	Ring – Split Retainer	2	2	P-19322
65	Lockwasher – Retainer, 5/16", Z, Heavy Spring	26	26	P-13851
66	Seal – Felt, Steering Ball	2	2	P-19323
67	Spring – Ball Seal	2	2	P-19324
68	Seal – Oil, Ball End	2	2	P-19325
69	Flange	2	2	P-19326
70	Ring – Retainer Half	4	4	P-19327
71	Complete Shaft & U-Joint Assembly (LH) – Consists of Indented Items			
	73 & 75	1	1	P-13858
72	Complete Shaft & U-Joint Assembly (RH) – Consists of Indented Items			
	74 & 75	1	1	P-13859
73	Shaft – Long (37.06")	1	1	P-13860
74	Shaft – Short (30.68")	1	1	P-13861
75	Complete U-Joint Assembly – Consists of Indented Items 75A thru 79	1	1	P-13857
75A	Bell – Outer Race	1	1	P-13862
76	Race – Inner	1	1	P-13863
77	Cage, U-Joint	1	1	P-13864
78	Ball, U-Joint	6	6	P-13865
79	Ring – Snap	1	1	P-13866

NO. 53187 PS-1200 PLANETARY STEERING AXLE ASSY. W/STANDARD DIFFERENTIAL ASSEMBLY

NO. 53186 PS-1200 PLANETARY STEERING AXLE ASSY. W/NO-SPIN DIFFERENTIAL ASSEMBLY

ITEM	DESCRIPTION	QUANTITY A	QUANTITY B	PART NO.
80	Nut-Heavy, Hex, Slotted, 5/8"-11 (Grade 2P)	2	2	P-19359
81	Washer, 21/32" X 3/8" X 3/16"	2	2	P-19360
82	Seal – Oil	2	2	P-13869
83	Complete Spindle Assembly (LH & RH) Consists of indented items 84,85	2	2	P-13870
84	Spindle Only	2	2	P-13871
85	Bushing – Spindle (LH & RH)	2	2	P-13872
87	Complete Caliper Assy. – See pages 47 & 48	1	1	P-19145
87A	Complete Caliper Assy. – (Mechanical)–See pages 49 & 50	1		P-19146
88	Bolt	2		P-19361
89	Locknut – Spindle to Flange, 7/16"-20 (Grade 8)	24	24	P-13876
90	Clevis (LH) – Tie Rod End	1	1	P-13877
90A	Clevis (RH) – Tie Rod End	1	1	P-13878
91	Seal – Oil	2	2	P-13879
92	Cone – Bearing (inner)	2	2	P-13880
93	Cone – Bearing (Outer)	2	2	P-13881
	Complete Hub Assembly (LH & RH) Consists of indented items 94-98	2	2	P-19362
94	Hub Only	2	2	P-13883
95	Cup – Bearing (Inner)	2	2	P-13886
96	Cup – Bearing (Outer)	2	2	P-13887
97	Stud – Wheel	20	20	P-13888
98	Stud–Hub to Drive Flange,7/16"-14X7/16"-20X1.75"	24	24	P-13889
99	Oil Deflector	2	2	P-19363
100	Spacer	2	2	P-19364
102	Hydraulic Strg. Cylinder (Cross) 4-5/8" Stroke, 17-7/16" Collasped			
	Length – See pages 41 & 42–#53003 thru S/N 003165	2	2	P-19389
102	Hydraulic Strg. Cylinder (Lantex) 4-5/8" Storke, 17-7/16" Collasped			
	Length – See pages 45 & 46 –#507068 S/N 003166 & up.	2	2	P-19383
103	Ring Gear	2	2	P-19330
104	Lockwasher, 5/16" Heavy Spring	2	2	P-13804
105	Nut – Wheel, 3/4"-16	20	20	P-13894
106	Spacer – Ring	2	2	P-13895
107	Locknut – Bearing, 2 3/4" - 16	2	2	P-13896
108	Bolt – hex, 5/16"-24 X 2.25" (Grade 5PH)	2	2	P-19331

NO. 53187 PS-1200 PLANETARY STEERING AXLE ASSY. W/STANDARD DIFFERENTIAL ASSEMBLY

NO. 53186 PS-1200 PLANETARY STEERING AXLE ASSY. W/NO-SPIN DIFFERENTIAL ASSEMBLY

ITEM	DESCRIPTION	QUANTITY A	QUANTITY B	PART NO.
**109	Gasket – Drive Flange	2	2	P-13898
110	Complete Drive Flange & Planetary Gear Assembly –Consists of Indented			
	Items 111 thru 122	2	2	P-19332
111	Drive Flange Only	2	2	P-19333
112	Needle Bearing (50 Quantity Per Gear)	300	300	P-13901
113	Planet Gear	6	6	P-13902
114	Washer – Spacer	12	12	P-13903
115	Pin – Planet Gear	6	6	P-19334
116	Pin – Spring, 3/16" X 1.50"	6	6	P-19335
117	Spacer – Planet Gear	6	6	P-13906
118	Washer–Thrust	2	2	P-19336
119	Plug – Square Socket Pipe, 1/2"-14C	2	2	P-19337
120	Plug – Pipe, 1/8" NPT	2	2	P-13867
121	Plug – Magnetic Drain, 1/2"-14	2	2	P-13780
122	Fitting – Relief	2	2	P-13868
*122A	Name Plate (Lull) – Drive Flange & Planetary Gear Assembly	2	2	P-19338
*122B	Screw – Machine (Name Plate Mounting), #10 - 32 X 0.31" C	4	4	P-19339
123	Dowel – Tapered	24	24	P-13910
124	Locknut, 7/16" - 20 (Grade 8)	24	24	P-13911
125	Tie Rod	1	1	P-13912
126	Stud – Special	2	2	P-19339
127	Nut – Slotted Head, 5/8"-11 (Grade 2P) (Tie Rod)	2	2	P-13914
128	Socket Assembly	4	4	P-13915
*	Name Plate (Axle Housing)	1	1	P-19340
*	Drive Screws (Axle Nameplate Mounting), # 2 X 1/4"	4	4	P-13917
*	Bearing Set (Consists of Items 22, 22A, 29, 33)	1	1	P-13919
*	NOT ILLUSTRATED ITEMS			
**	Customer may substitute silicone adhesive/sealant equal or equivalent			
	to RTV-732 Dow Corning in place of gasket			
*	Label – Gear Lube	3	3	P-19314
*	Fitting (No. 507081 Disc Brake Caliper Assembly)	2	2	
*	Bleed Screw (No. 507081 Disc Brake Caliper Assembly)	2	2	
LH – Left Hand	RH – Right Hand	AR –As Required	Assy – Assembly			

844 [FRONT S/N 768,769,772 THRU
REAR S/N 768 THRU
644 [FRONT S/N 530,530 THRU
REAR S/N 530,533 THRU

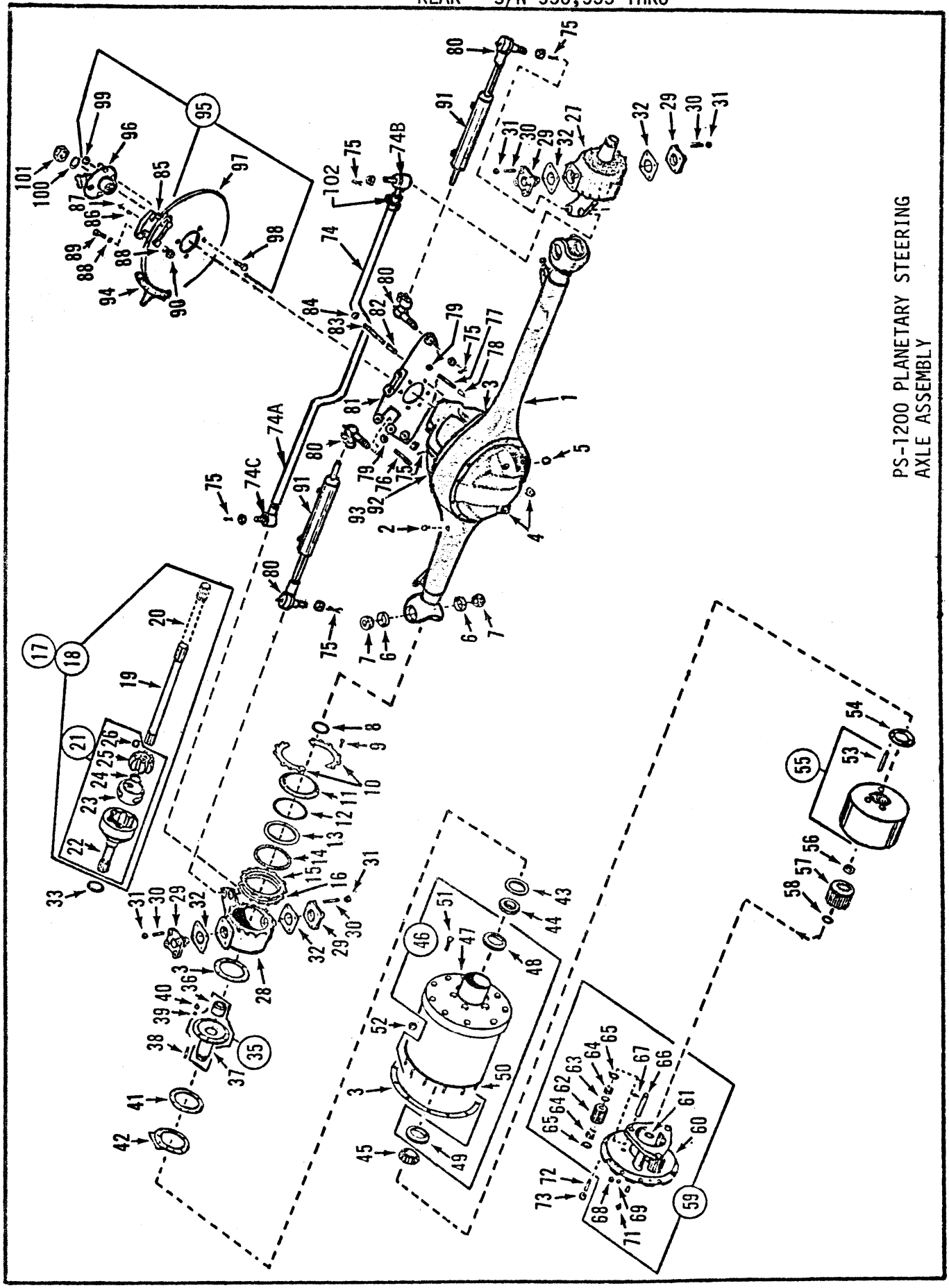

ITEM	DESCRIPTION	QUANTITY A (FRONT PLANETARY STEERING AXLE ASSEMBLY)	QUANTITY B (REAR PLANETARY STEERING AXLE ASSEMBLY)	PART NO.
COMPLETE PLANETARY STEERING AXLE ASSY - 6.17:1 RATIO		1		P21735
COMPLETE PLANETARY STEERING AXLE ASSY - 6.17:1 RATIO			1	P21736
COMPLETE PLANETARY STEERING AXLE ASSY - 5.43:1 RATIO		1		P21765
COMPLETE PLANETARY STEERING AXLE ASSY - 5.43:1 RATIO			1	P21766
1	Axle Housing Weldment	1	1	P21801
2	Vent - Axle Air	1	1	P13784
*3	Formed Gasket	AR	AR	
4	Plug - Square Socket, 3/4"-14 (Steel)	2	2	P19300
5	Plug - Magnetic Drain, 1/2"-14	1	1	P13780
6	Cup - Bearing	4	4	P19298
7	Cone - Bearing	4	4	P19318
8	Seal - Oil, Axle Shaft	2	2	P13787
9	Bolt, 5/16"-18 X 0.50" (Grade 2 Whiz)	24	24	P17150
10	Retainer - Outer (2 LH, 2 RH)	4	4	P19327
11	Retainer - Seal (Split) (LH & RH)	2	2	P19322
12	Spring - Ball Seal (LH & RH)	2	2	P19324
13	Seal - Ball End (LH & RH)	2	2	P19325
14	Seal - Felt (LH & RH)	2	2	P19323
15	Retainer - Felt (LH & RH)	2	2	P19326
16	Gasket - Knuckle (LH & RH)	2	2	P13848
17	Shaft & U-Joint Assembly (Short) - Consists of			
	Indented Items 19, 21 & Component Parts	1	1	P21802
18	Shaft & U-Joint Assembly (Long) - Consists of			
	Indented Items 20, 21 & Component Parts	1	1	P21803
19	Axle Shaft (Short) (30.00")	1	1	P21804
20	Axle Shaft (Long) (36.50")	1	1	P21805
21	Complete U-Joint Assembly (LH & RH) - Consists of			
	Indented Items 22 Thru 26	1	1	P21806
22	Bell - Outer Race	1	1	P21807
23	Cage, U-Joint	1	1	P13864
24	Ring - Snap	1	1	P13866

ITEM	DESCRIPTION	QUANTITY		PART NO.
		A	B	
		REAR PLANETARY STEERING AXLE ASSEMBLY	FRONT PLANETARY STEERING AXLE ASSEMBLY	
25	Race - Inner	1	1	P21808
26	Ball, U-Joint	6	6	P13865
27	Housing - Steering Knuckle (LH)	1	1	P21809
28	Housing - Steering Knuckle (RH)	1	1	P21810
29	Trunnion	4	4	P19317
30	Stud, 1/2"-13 & 1/2"-20 X 2.00" (Trunnion Mounting)	16	16	P13834
31	Locknut, 1/2"-20 (Grade 8) (Trunnion Mounting)	16	16	P13842
32	Shim - Knuckle Bearing (.005" Thick)	4	4	P13839
32	Shim - Knuckle Bearing (.010" Thick)	4	4	P13840
33	Seal - Oil (LH & RH)	2	2	P13869
35	Spindle Assembly (LH & RH) - Consists of Items 36, 37	2	2	P21811
36	Bushing - Spindle (LH & RH)	2	2	P13872
37	Spindle Only (LH & RH)	2	2	P21812
38	Stud - Spindle to Knuckle, 7/16"-14 & 7/16"-20 X			
	2.00" (12 LH, 12 RH)	24	24	P13833
39	Washer (12 LH, 12 RH)	24	24	P21813
40	Locknut, 7/16"-20 (Grade 8) (12 LH, 12 RH)	24	24	P13911
41	Spacer (LH & RH)	2	2	P19364
42	Oil Deflector (LH & RH)	2	2	P19363
43	Seal - Oil (LH & RH)	2	2	P13879
44	Cone - Bearing (Inner) (LH & RH)	2	2	P13880
45	Cone - Bearing (Outer) (LH & RH)	2	2	P13881
46	Complete Hub Assembly (LH & RH) - Consists of			
	Items 47 Thru 51	2	2	P21814
47	Hub Only (LH & RH)	2	2	P21815
48	Cup - Bearing (Inner) (LH & RH)	2	2	P13886
49	Cup - Bearing (Outer) (LH & RH)	2	2	P13887
50	Stud - Hub to Drive Flange, 7/16"-14 X 7/16"-20 X			
	1.75" (12 LH, 12 RH)	24	24	P13889
51	Stud - Wheel (10 LH, 10 RH)	20	20	P21816
52	Nut - Wheel, 3/4"-16 (10 LH, 10 RH)	20	20	P13894

ITEM	DESCRIPTION	QUANTITY A (REAR PLANETARY STEERING AXLE ASSEMBLY)	QUANTITY B (FRONT PLANETARY STEERING AXLE ASSEMBLY)	PART NO.
53	Roll Pin, .312" x .750" (LH & RH)	2	2	P21817
54	Locknut (LH & RH)	2	2	P21818
55	Ring Gear Assembly (LH & RH) Includes			
	Roll Pin - Item 53 &	2	2	P21819
56	Spacer (LH & RH)	2	2	P13895
57	Sun Gear (LH & RH)	2	2	P21820
58	Ring - Retaining (LH & RH)	2	2	P13783
59	Complete Drive Flange & Planetary Gear Assembly			
	(LH & RH) - Consists of Items 60 Thru 71	2	2	P19332
60	Drive Flange Only (LH & RH)	2	2	P13900
61	Thrust Washer (LH & RH)	2	2	P19336
62	Planetary Gear (3 LH, 3 RH)	6	6	P13902
63	Spacer - Planetary Gear (3 LH, 3 RH)	6	6	P13906
64	Needle Bearing (50 Quantity Per Gear)	300	300	P13901
65	Washer - Special, 7/8" (6 LH, 6 RH)	12	12	P13903
66	Pin - Planetary Gear (3 LH, 3 RH)	6	6	P19334
67	Pin - Tension, 3/16" X 1.50" (3 LH, 3 RH)	6	6	P19335
68	Plug - Magnetic Drain, 1/2"-14 (LH & RH)	2	2	P13780
69	Plug - Hex Soc. Pipe, 1/2"-14 (LH & RH)	2	2	P13909
71	Relief Fitting (LH & RH)	2	2	P21821
72	Dowel - Tapered (12 LH, 12 RH)	24	24	P13910
73	Locknut, 7/16"-20 (Gr. 8) (12 LH, 12 RH)	24	24	P13911
74	Tie Rod Assembly	1	1	P21822
74A	Tie Rod	1	1	P23262
74B	Tie Rod End, Course Thread	1	1	P23263
74C	Tie Rod End, Fine Thread	1	1	P10345
75	Cotter Pin, 1/8" X 1.25", P	6	6	P13835
76	Stud, 7/16"-14 & 7/16"-20 X 1.88" (Carrier Mounting)	6	6	P17535
77	Stud, 7/16"-14 & 7/16"-20 X 2.25" (Carrier Mounting)	4	4	P17536
3	Dowel - Tapered (Carrier Mounting)	4	4	P13910
79	Locknut, 7/16"-14 (Grade 8)	10	10	P17537
80	Vertical Socket	4	4	P13915

ITEM	DESCRIPTION	QUANTITY A (FRONT PLANETARY STEERING AXLE ASSEMBLY)	QUANTITY B (REAR PLANETARY STEERING AXLE ASSEMBLY)	PART NO.
81	Bracket - Steering Cylinder	1	1	P21823
82	Dowel - Bracket Mounting	6	6	P13821
83	Stud, 5/8"-18 & 5/8"-11 X 2.530", Bracket Mounting	6	6	P13819
84	Nut, Hex, 5/8"-18 (Grade 5Z), Bracket Mounting	6	6	P13820
85	Complete Caliper Assembly	1	1	P20780
86	Fitting - Bleeder Screw (Caliper Assembly)	2	2	P19767
87	Bleeder Screw (Caliper Assembly)	2	2	P21824
88	Washer - Flat, 5/8"	4	4	P19306
89	Screw, 12 PT., 5/8"-11 X 2.50" (Grade 8 PH)	2	2	P21825
90	Locknut, 5/8"-11 (Grade 8)	2	2	P21826
91	Complete Steering Cylinder Assembly (LH & RH)	2	2	P21827
91A	Seal Kit, Steering Cylinder (Not shown)	2	2	P21828
92	Complete Carrier Assembly (6.17:1 Ratio) w/No-Spin	1		P21829
	Complete Carrier Assembly (5.43:1 Ratio)W/No-Spin	1		P21831
93	Complete Carrier Assembly (6.17:1 Ratio) Standard		1	P21830
	Complete Carrier Assembly (5.34:1 Ratio) Standard		1	P21832
94	Complete Caliper Assembly - Mechanical	1		P20781
95	End Yoke Assembly	1	1	P21837
96	Yoke, 6C	1	1	P19352
97	Disc - Brake	1	1	P21833
98	Hex Head Screw - Special	4	4	P21834
99	Locknut, 1/2"-20 (Grade 8)	4	4	P13842
100	Washer - Flat, 1"	1	1	P21835
101	Nut - Pinion	1	1	P21836
102	Clamp, Tie Rod	2	2	P23264
*	Customer may substitute silicone adhesive/Sealant			
	equal to RTV-732 Dow Coring in place of gasket.			

SERVICE PARTS
CARRIER ASSEMBLY

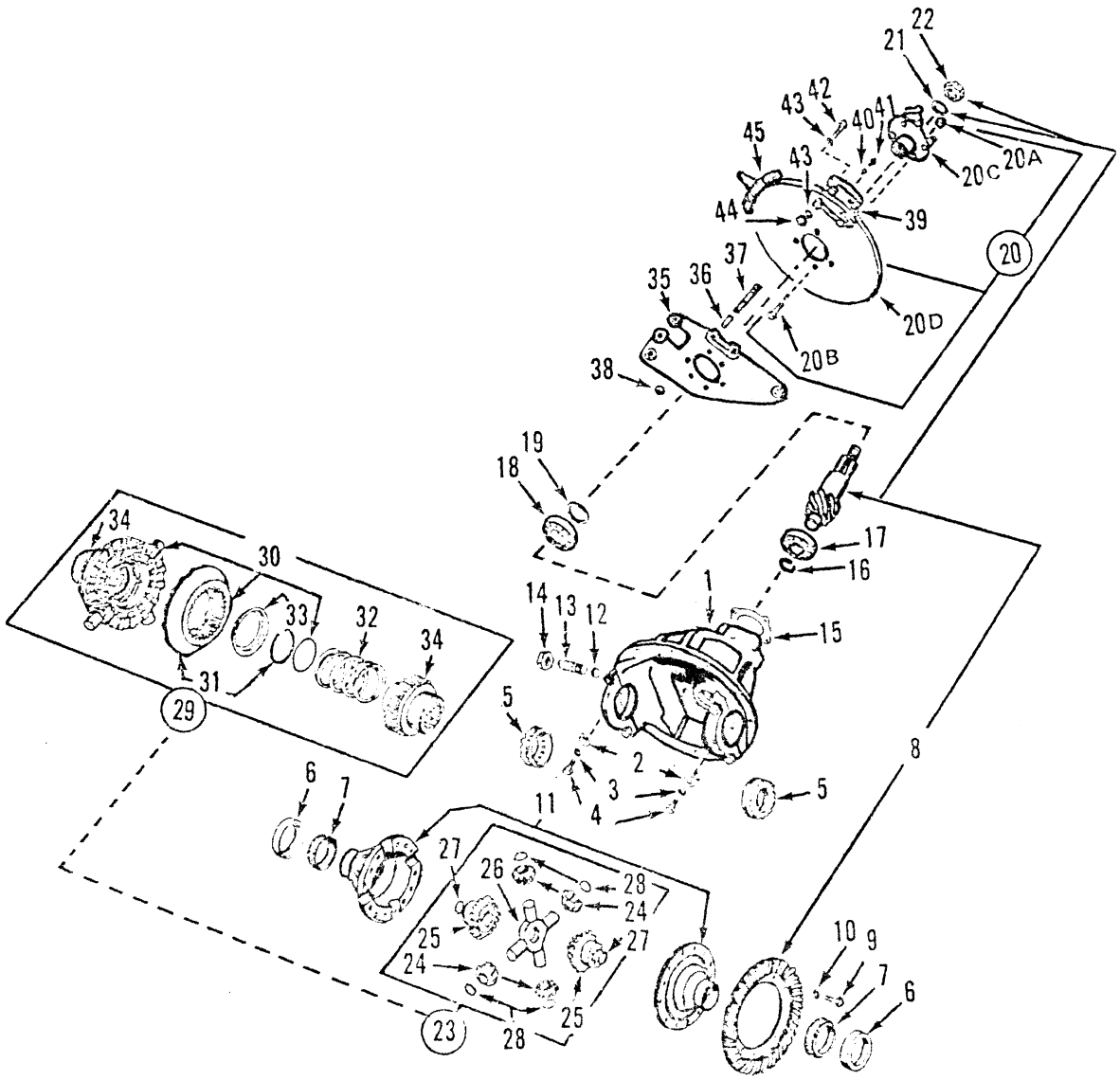

ITEM	DESCRIPTION	QUANTITY A (CARRIER ASSEMBLY W/STANDARD DIFFERENTIAL)	QUANTITY B (CARRIER ASSEMBLY W/NO-SPIN DIFFERENTIAL)	PART NO.
COMPLETE CARRIER ASSY W/NO-SPIN DIFF. (6.17:1 RATIO)			1	P21829
COMPLETE CARRIER ASSY W/NO-SPIN DIFF. (5.43:1 RATIO)			1	P21831
CONSISTS OF ITEMS 1 THRU 22, 29 THRU 38.				
COMPLETE CARRIER ASSY W/STANDARD DIFF. (6.17:1 RATIO)		1		P21830
COMPLETE CARRIER ASSY W/STANDARD DIFF. (5.43:1 RATIO)		1		P21832
CONSISTS OF ITEMS 1 THRU 28, 35 THRU 38.				
1	Carrier Housing & Cap Assembly	1	1	P21842
2	Lock - Differential Adjusting Nut	2	2	P13805
3	Lockwasher, Lock Bolt, 5/16", P, Reg. Spring	2	2	P13826
4	Bolt - Bearing Adjusting Nut Lock, 5/16"-18 X 0.625" (Grade 5PH)	2	2	P19313
5	Locknut - Bearing Adjusting	2	2	P13806
6	Cup - Bearing, Differential Side	2	2	P17186
7	Cone- Bearing, Differential Side	2	2	P17185
8	Ring Gear & Pinion Kit (6.17:1 Ratio)	1	1	P13813
	Ring Gear and Pinion Kit (5.43:1 Ratio)	1	1	P21843
9	Bolt- Diff. Ring Gear, 1/2"-20 X 2.00" (Grade 7)	12	12	P13814
10	Lockwasher, Diff. Ring Gear Bolt, 1/2", P, Heavy Spring	12	12	P13815
11	Differential Case & Cover Assembly	1	1	P13808
12	Pad - Thrust	1	1	P13827
13	Screw - Thrust Pad	1	1	P13828
14	Jam Nut - Thrust Pad Screw, 7/8"-14	1	1	P13829
15	Gasket	1	1	P13794
16	Ring - Lock, Pinion Shaft Bearing	1	1	P13811
17	Bearing, Roller - Pinion Shaft (Rear)	1	1	P13812
18	Bearing, Ball - Pinion Shaft (Front)	1	1	P13816
19	Seal - Oil	1	1	P13841

ITEM	DESCRIPTION	QUANTITY A (CARRIER ASSEMBLY W/STANDARD DIFFERENTIAL)	QUANTITY B (CARRIER ASSEMBLY W/NO-SPIN DIFFERENTIAL)	PART NO.
20	End Yoke Assembly	1	1	P21837
*20A	Locknut, 1/2"-20 (Grade 8)	4	4	P13842
*20B	Hex Head Screw - Special	4	4	P21834
*20C	Yoke, 6C	1	1	P19352
20D	Disc - Brake	1	1	P21833
21	Washer - Flat, 1"	1	1	P21835
22	Nut - Pinion	1	1	P21836
23	Complete Differential Assembly - Standard,			
	Consists of Items 24 thru 28	1		P21838
24	Gear - Pinion	4		P19310
25	Gear - Side	2		P21839
26	Spider	1		P19312
27	Washer - Thrust	2		P17145
28	Washer - Thrust	4		P17144
29	Complete No-Spin Differential Assembly -			
	Consists of Items 30 thru 34		1	P21840
30	Spider Assembly - consists of Spider,			
	Center Cam, Snap Ring which is not			
	serviced separately		1	P19345
31	Clutch & Holdout Ring Assembly - consists			
	of Clutch Member & Holdout Ring which is			
	not serviced separately		1	P21841
32	Spring		2	P19347
33	Retainer - Spring		2	P19348
34	Side Gear (LH & RH)		2	P19349
35	Bracket - Steering Cylinder	1	1	P21823
36	Dowel	6	6	P13821
37	Stud, 5/8"-18 & 5/8"-11 X 2.530"	6	6	P13819
38	Nut - Hex, 5/8"-18 (Grade 5Z)	6	6	P13820
39	Complete Caliper Assembly	1	1	P20780
40	Fitting-Bleeder Screw (Caliper Assembly)	2	2	P19767

ITEM	DESCRIPTION	QUANTITY		PART NO.
		CARRIER ASSEMBLY W/STANDARD DIFFERENTIAL	CARRIER ASSEMBLY W/NO-SPIN DIFFERENTIAL	
		A	B	
41	Bleeder Screw (Caliper Assembly)	2	2	P21824
42	Screw, 12 PT., 5/8"-11 X 2.50" (Grade 8PH)	2	2	P21825
43	Washer - Flat, 5/8"	4	4	P19306
44	Locknut, 5/8"-11 (Grade 8)	2	2	P21826
45	Complete Caliper Assembly		1	P20781
*	NOT ILLUSTRATED ITEMS			
RH	Right Hand			
LH	Left Hand			
AR	As Required			
ASSY.	ASSEMBLY			

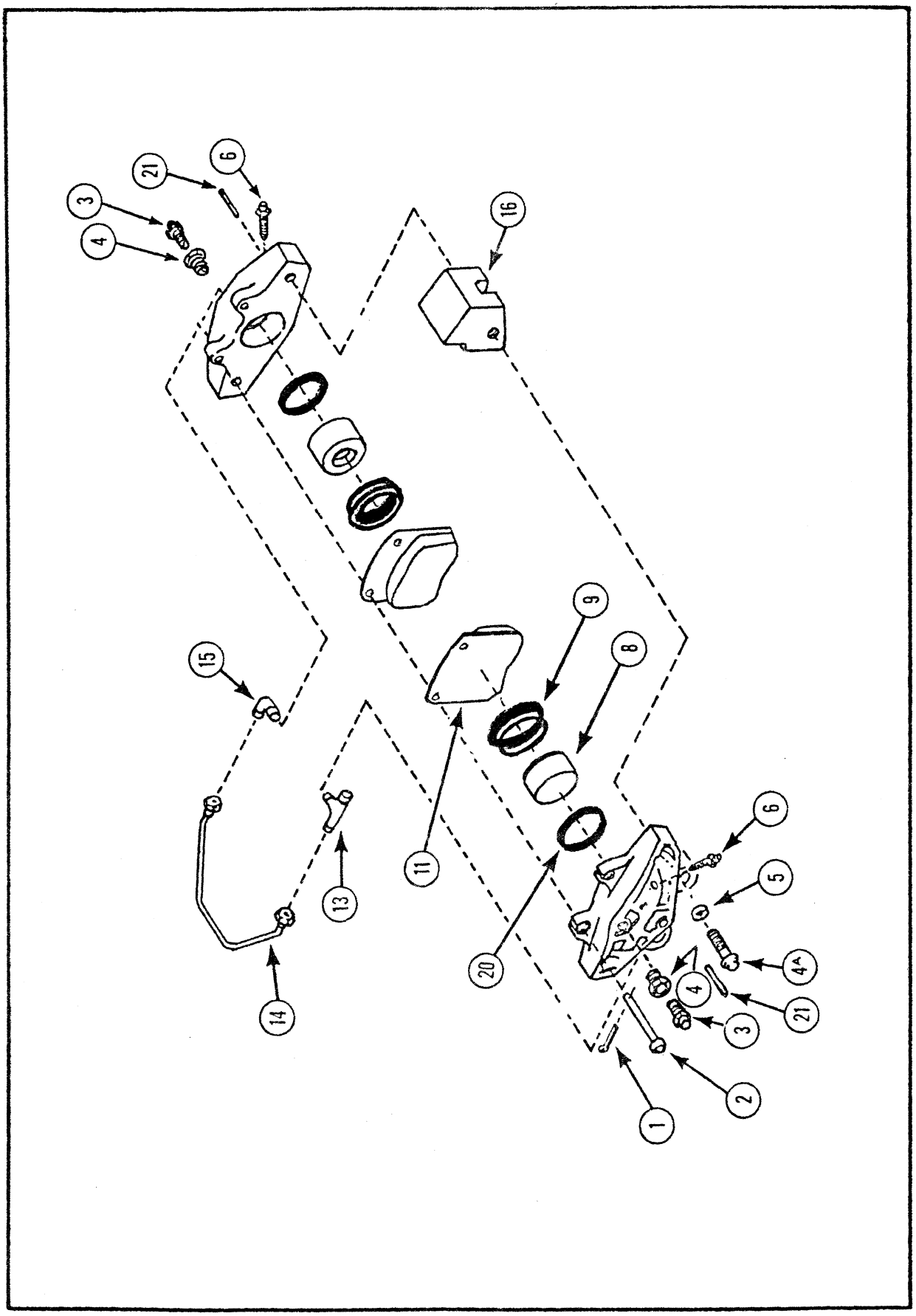
21
6
3
4
16
15
9
8
11
13
14
20
6
5
4A
4
21
3
2
1

CALIPER ASSEMBLY

ITEM	DESCRIPTION	QUANTITY A	QUANTITY B	PART NO.
	COMPLETE CALIPER ASSEMBLY	1		P20780
1	Pin - Cotter	2		P19177
2	Pin - Anchor	2		P19176
3	Vent	2		P20789
4	Fitting - Hydraulic Brake	2		P20790
4A	Screw - 12 Pt. Cap	4		P19181
5	Washer - Flat	4		P19182
6	Vent	4		P20792
7				
8	Piston Wheel Cylinder	2		P20785
9	Boot	2		P20784
10				
11	Lining - Brake	2		P19159
12				
13	Tee - Flare Tube	1		P19168
14	Tubing - Brake	1		P19166
15	Elbow - Flare Tube	1		P19167
16	Spacer - Brake Cylinder	2		P19160
17				
18				
19				
20	Ring - O	2		P20786
21	Pin - Drive	2		P20791

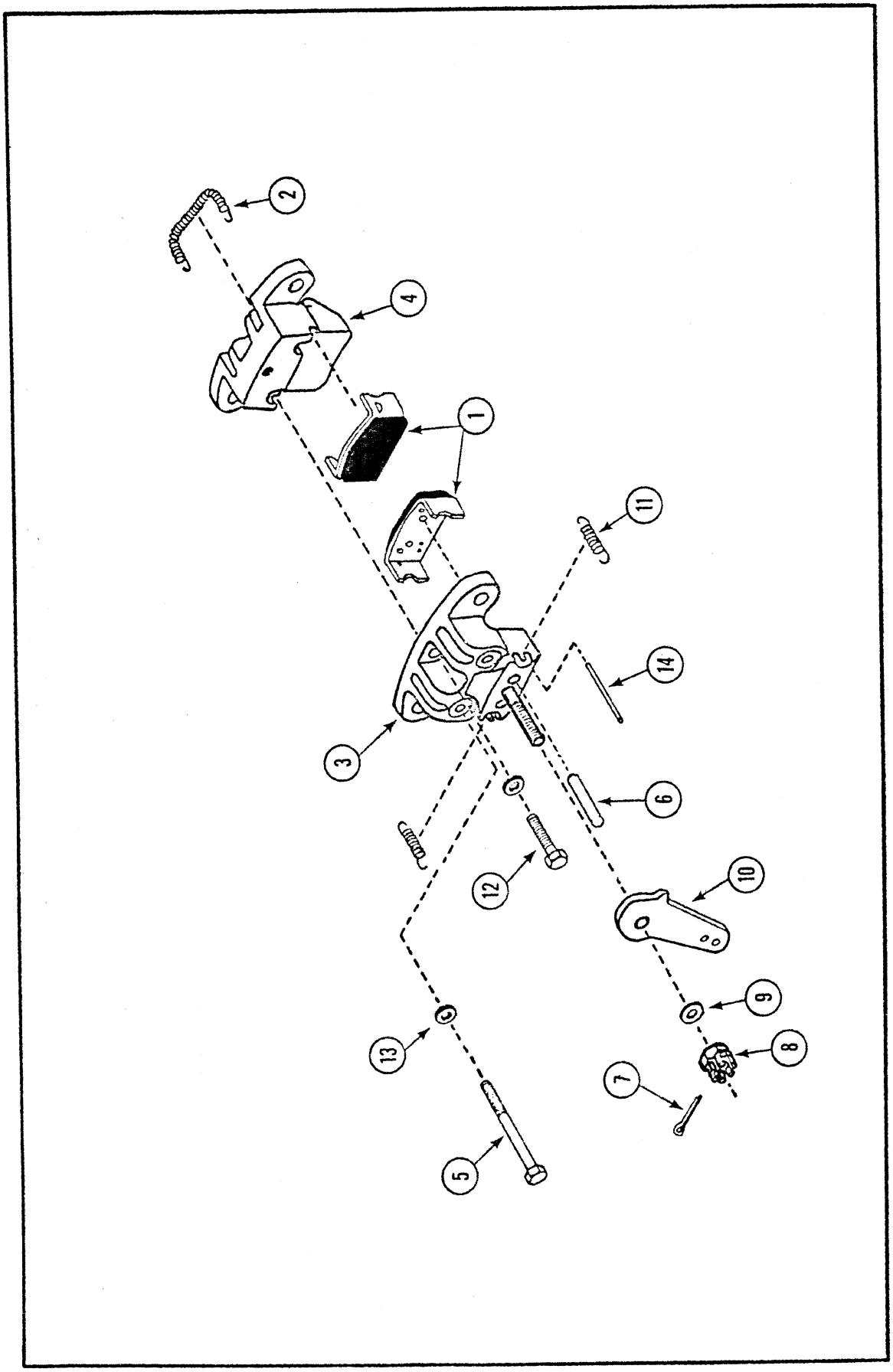

1863

CALIPER ASSEMBLY

ITEM	DESCRIPTION	QUANTITY		PART NO.
		A	B	
	COMPLETE CALIPER ASSEMBLY	1		P20781
1	Pad Holder Assembly (Sintered Type)	2		P19150
2	Spring	1		P20796
3	Housing and Stud Assembly - Cam Side	1		P20794
4	Housing - Brake, Carrier	1		P20795
5	Bolts	2		P20803
6	Straight Pins	2		P20799
7	Cotter Pin	1		P20821
8	Slotted Nut	1		P20820
9	Washer - Flat	1		P20819
10	Lever Arm - Brake Shoe	1		P20800
11	Spring - Coil Tension	2		P20797
12	Bolt - Hex	1		P20801
13	Washer	3		P20802
14	Pin	1		P20798

WET DISC BRAKES

Lull four wheel drive Highlanders are now equipped with a wet disc brake, which is totally enclosed and mounted on the input end of the axle differential housing. All internal components are sealed in a cast iron housing that is actuated and cooled with hydraulic oil which is supplied by the reservoir. The cooling oil reduces lining wear by dissipating heat produced during repeated braking in a short period, or continuous braking on a long grade. A constant flow of fluid is metered through an orifice at the brake cooling inlet port, and circulated within the housing during machine operation. When the housing chamber fills, the fluid then leaves the outlet port and returns to replenish the master cylinder and hydraulic reservoirs.

The replenishing of the master cylinder serves two (2) purposes. First, it keeps the brake lines and cylinder reservoir full at all times, eliminating the need for refilling. Secondly, it is a visual sign to the operator that the system utilizes hydraulic oil in lieu of brake fluid. A pressure gauge is located at the return line filter (mounted on top of the hydraulic reservoir) to indicate any pressure buildup in the cooling return line caused by a clogged filter element.

SERVICE INFORMATION:

The filter element should be replaced when the pressure exceeds 15 to 18 PSI, to assure maximum filtration of the system. Failure to do so will result in back pressure in the cooling return line, causing possible intermediate seal blowout, and fluid leakage out the weep hole in the power plate.

To service the filter element, loosen the four (4) nuts and washers and remove the top cover. Lift the element assembly out of the canister and unscrew the nut on the underside to release the element from the insert. Reinstall using reverse procedure.

Under normal operating conditions, the temperature of the brake cooling fluids should be 140° - 180° fahrenheit.A temperature reading can be made by removing the pressure gauge located at the return line filter and reinstalling a temperature sending unit. If the temperatures are in excess of 200° fahrenheit, a check should be made to determine the cause. If both front and rear brakes are overheating, it may be an indication that the free travel in the brake pedal linkage needs readjusting. The piston inside the master cylinder must return to its released position with the brake off to allow the trapped fluid in the brake lines to return to the master cylinder reservoir. Should the fluid remain trapped in the lines, the piston in the wet disc brakes cannot fully release, preventing the stationary discs from sliding free of the rotating discs. When this condition prevails, the result is brake linings overheating due to constant friction. The linkage should be adjusted so that with the pedal full up, the push rod has a gap of approximately .06 inch before contacting the returned master cylinder piston. (Alternate method of checking brake temperature: Brake housing should feel no warmer than hydraulic oil reservoir.)

Should the overheating be confined to one brake only, the problem may be a plugged cooling line inlet. Located in the cooling inlet port of each brake is a small brass insert which restricts the amount of fluid entering the housing

SERVICE INFORMATION (continued)

chamber of the wet disc brake. Should these orifices become clogged, it would shut off any fluid circulating through the brake, resulting in overheating. Use either a .020 diameter jewelers ream or a No. 6 acetylene torch tip cleaner to clear the opening. DO NOT redrill the hole to a larger diameter, as this will increase the flow going to the housing chamber, and result in possible intermediate seal blow-out and relaxed steering. This type of brake requires a minimal amount of circulating fluid for cooling, and cannot withstand any surges created by the removal or enlarging of the brass insert.

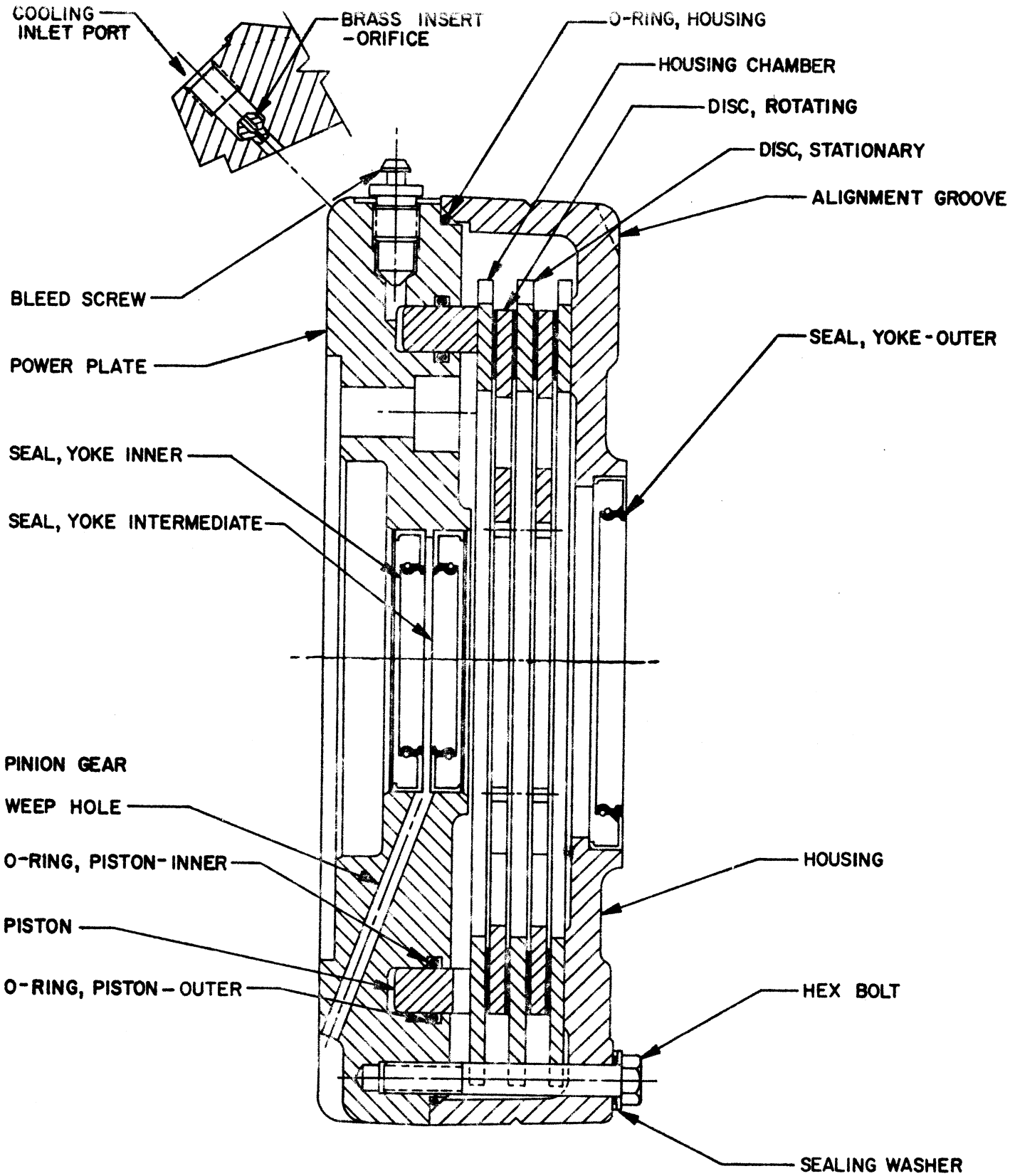

CUT A WAY VIEW OF WET DISC BRAKE

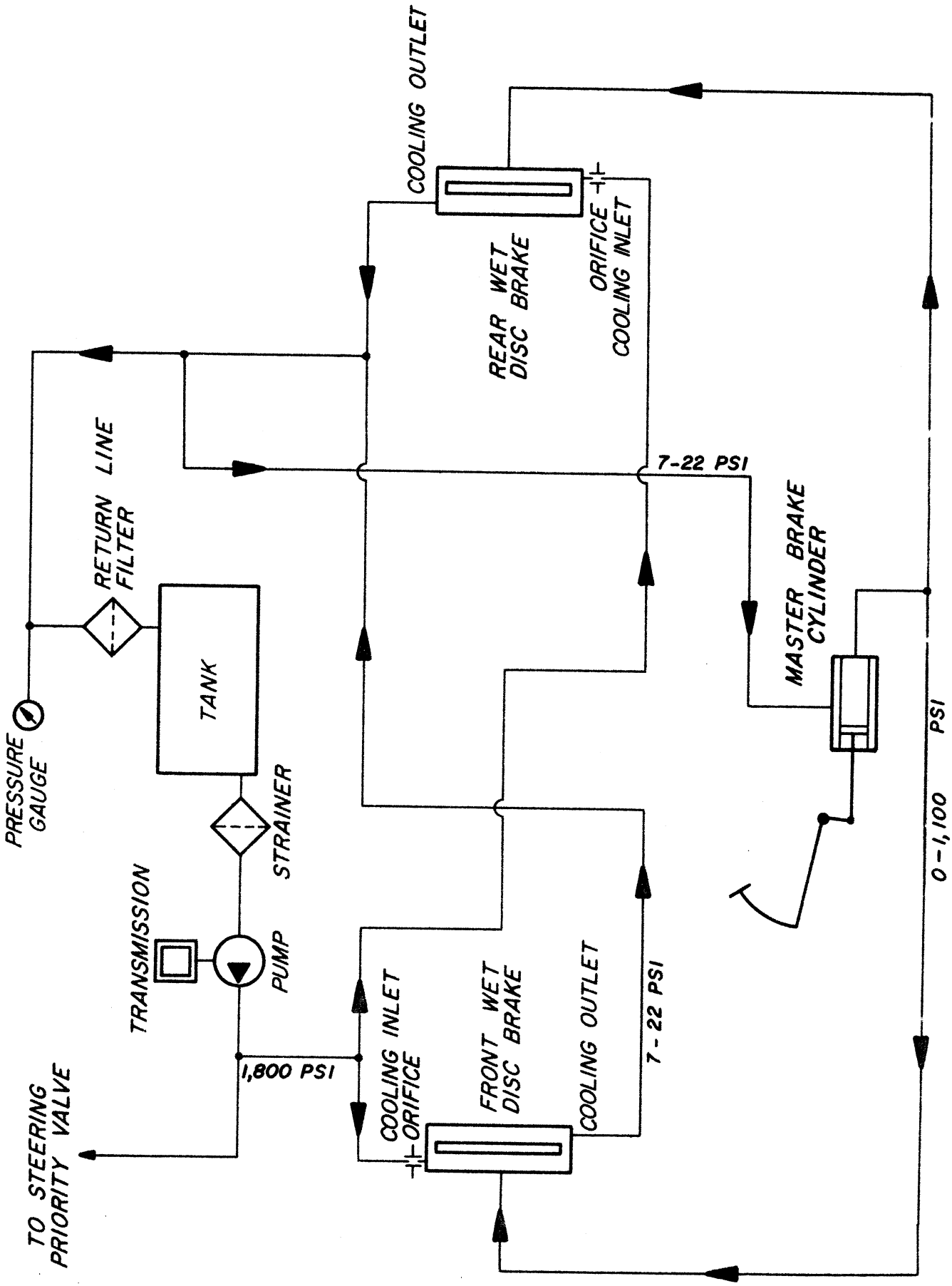

PLUMBING SCHEMATIC — WET DISC BRAKE

1883

BRAKE TESTING
AND
BLEEDING PROCEDURE

FOR VEHICLES EQUIPPED WITH

WHEEL END WET DISC BRAKES

LULL

The brake testing and bleeding procedure described herein is performed on each vehicle as it moves off the Lull assembly line. During this time a brake test report is completed by test personnel and placed on file.

This procedure also may be used in the field for checking brake components for failure or adjustment with the aid of test gauges provided by Lull. The bleeding procedure alone does not require use of test equipment.

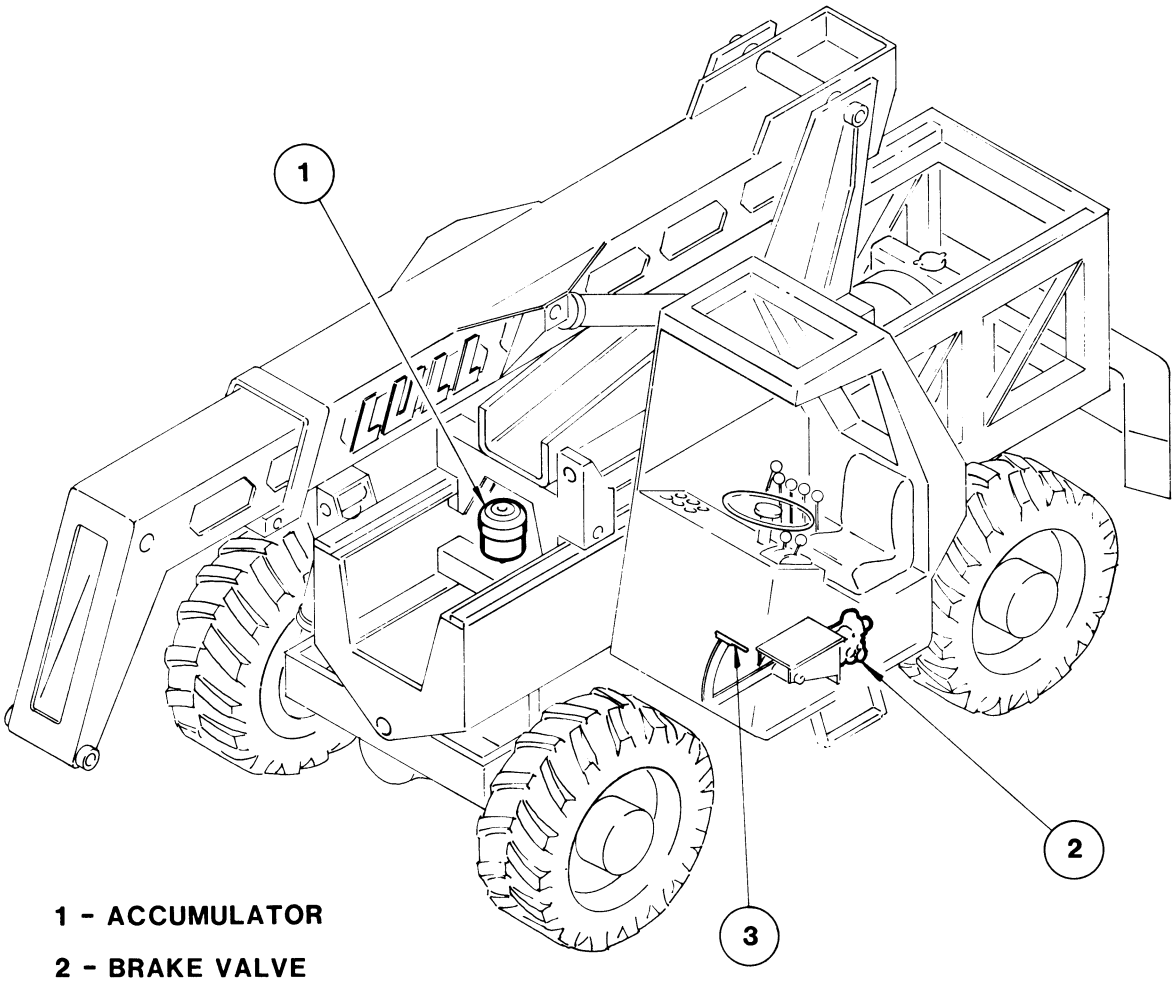

1 - ACCUMULATOR

2 - BRAKE VALVE

3 - BRAKE PEDAL

FIGURE 1

BRAKE TESTING AND BLEEDING PROCEDURE:

1. a. Place transmission selector control in neutral.
   b. Apply the emergency brake.
   c. Shut off engine.
   d. Check hydraulic oil level.
   e. Hydraulic pump must be in good operating order.

2. Locate the accumulator (1) on vehicle (See Fig. 1) and remove its protective cap (4) and stem cap (9) (See Fig. 2).

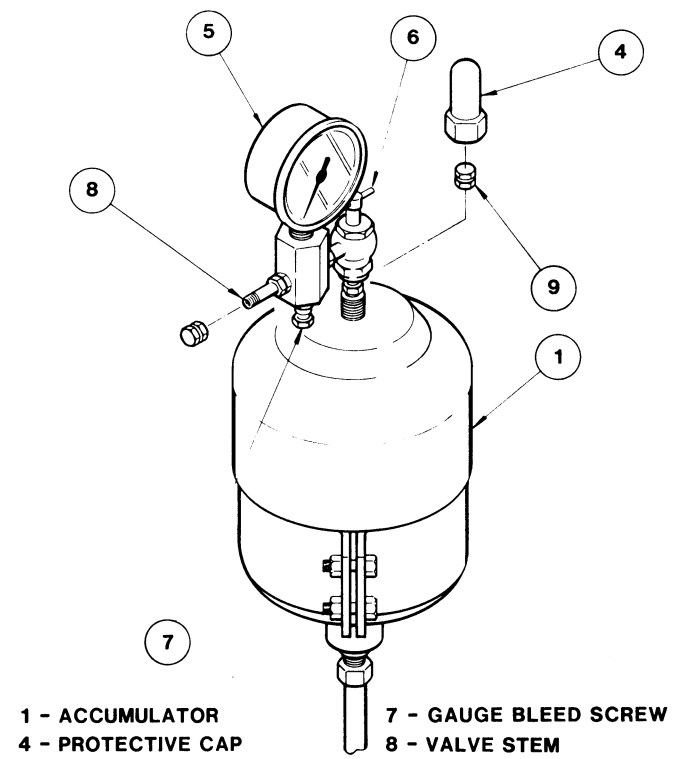

1 - ACCUMULATOR
4 - PROTECTIVE CAP
5 - TEST GAUGE
6 - TEE HANDLE/NEEDLE VALVE
7 - GAUGE BLEED SCREW
8 - VALVE STEM
9 - VALVE STEM CAP

FIGURE 2

3. a. Mount an appropriate pressure gauge (5) to the accumulator (See Fig. 2). The gauge must be of 2500 PSI capacity (correctly calibrated) with 5/16-32 UNEF mounting nut threads.
   b. The bleed screw (7) must be tightly closed (turned in).
   c. The tee handle/needle valve (6) must be turned out.
   d. Be sure of an air-tight connection when mounting gauge.
   e. Turn-in the tee handle/needle valve after gauge is mounted.

4. Mount an appropriate pressure testing gauge (10) in the brake line at the left front wheel (See Fig. 3). The gauge must be of 600 PSI capacity (correctly calibrated) with 7/16-20 JIC mounting threads.
   NOTE: A test tee (11) will be required which must have 7/16-20 JIC threads.

5. Repeatedly pump (push, hold, release) the brake pedal until all brake line pressure is depleted. Gauge (10) must read 0 PSI.

6. a. At this time the pressure testing gauge (5) must read 400-415 PSI (See Fig. 2).
   b. If pressure is correct, proceed to step 7.
   c. If pressure is incorrect, proceed to step 13.

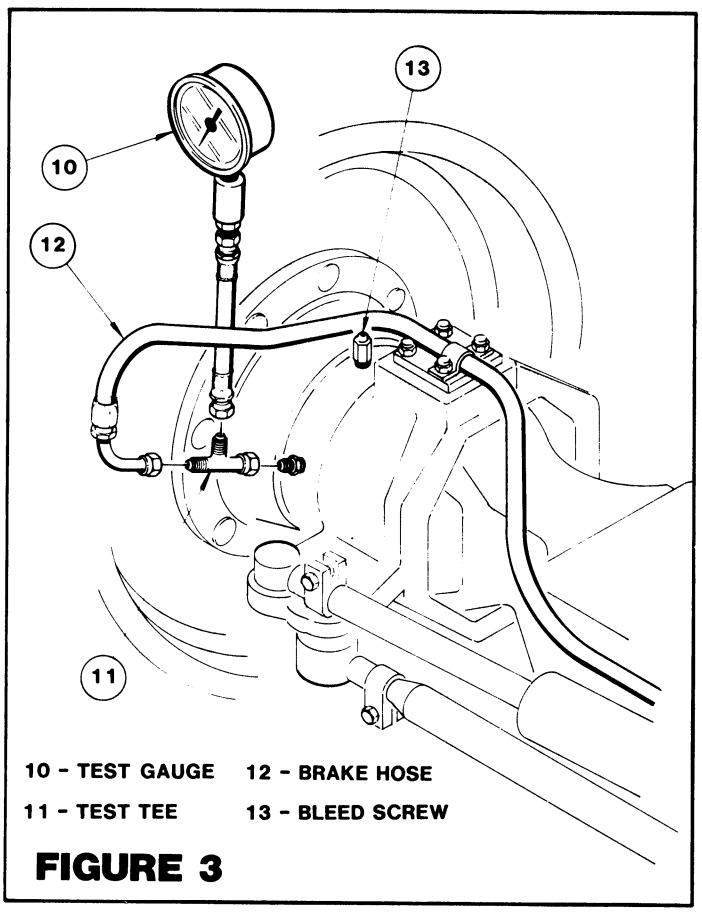

FIGURE 3

7. Start the engine and allow it to run (idle) throughout the remainder of the bleeding and testing procedure. This will allow the accumulator to maintain operating pressure.

8. a. Open bleeder screw (13) at left rear wheel and slowly apply brake pedal pressure until air is bled out of the line, then close bleeder screw.
   b. Perform this step at each wheel in the following sequence:

      (As viewed from operator's cab)

      (1) Left Rear
      (2) Right Rear
      (3) Right Front
      (4) Left Front

9. a. For testing brake line pressure, apply brake pedal pressure and hold.
   b. Note gauge pressure reading at left front wheel (See Fig. 3).
   c. Gauge must indicate 300 to 330 PSI.
   d. If pressure is correct:
      (1) Release brake pedal pressure.
      (2) Disassemble gauge (10) and tee (11) from brake line.
      (3) Reassemble brake line.
      (4) Bleed left front wheel following the bleeding instruction in step 8.
   e. If pressure is incorrect, proceed to step 14.

10. a. Allow accumulator to reach full charge (high limit) pressure.
    b. The test gauge (5) must read between 1150 and 1250 PSI (See Fig. 2).
    c. If pressure is correct, proceed to step 11.
    d. If pressure is incorrect, proceed to step 15.

11. a. Repeatedly pump (push, hold, release) the brake pedal to allow accumulator pressure to drop.
    b. While watching the test gauge (5) (See Fig. 2) note lowest pressure indicated before accumulator begins to recharge (pressure begins to rise).
    c. Perform steps (a) and (b) three (3) times.
    d. Lowest pressure (low limit) must read between 550 and 650 PSI.
    e. If pressure is correct, proceed to step 12.
    f. If pressure is incorrect, shut off the engine, replace the brake valve and return to step 7 and continue.

12. a. Turn out tee handle/needle valve (6) on testing gauge (5) (See Fig. 2).
    b. Release any remaining air in gauge through bleeding screw (7) and tighten.
    c. Remove gauge from accumulator and replace accumulator stem cap (9) and protective cap (4).

<u>The brake testing and bleeding procedure is completed.</u>

13. Adjusting accumulator precharge (from step 6).

a. If test gauge pressure reads too high, slowly turn out gauge bleeding screw (7) to release pressure and tighten when 400 PSI is indicated (See Fig. 2).

b. If test gauge pressure reads too low, charge the valve stem (8) on the gauge with dry nitrogen until gauge indicates 400 PSI (See Fig. 2).

c. If correct pressure cannot be achieved, replace accumulator, reinstall test gauge and adjust accumulator to correct pressure.

d. Return to step 7 and continue.

14. Adjusting the brake valve for correct brake line pressure (from step 9).

a. After noting incorrect brake line pressure, shut off the engine and disassemble brake valve (2) from bracket (14) (See Fig. 4). DO NOT REMOVE HOSES.

b. Pry ring (17) away from valve housing (2).

c. Remove boot (18) and piston (19).

d. Add or remove shims (20) as required.
NOTE: Adding shims (thickness) will increase pressure. Removing shims (thickness) will reduce pressure.
Shims are provided in the following thicknesses and pressure results:

SHIM THICKNESS	PRESSURE
.032	65 PSI
.018	37 PSI
.007	14 PSI
.004	8 PSI

e. Add or remove the necessary shims calculated to arrive at correct brake line pressure.

f. Reassemble brake valve piston (19) boot (18) and ring (17).

g. Reassemble brake valve (2) to bracket (14).

h. Restart engine, return to step 9 and continue.

NOTE: If after completing steps 9 and 14, correct brake line pressure cannot be achieved, shut off the engine and replace the brake valve. Return to step 7 and continue.

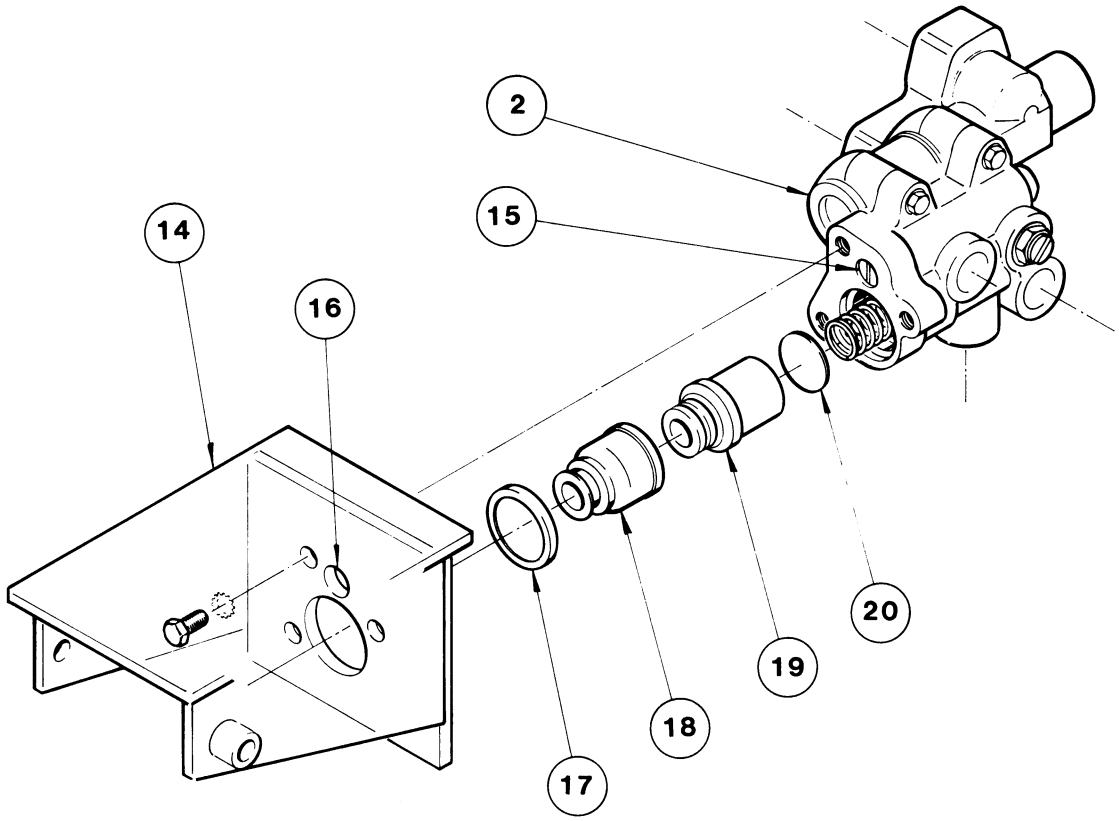

2 - BRAKE VALVE
14 - BRACKET
15 - ADJUSTING SCREW
16 - ADJUSTING ACCESS HOLE
17 - RETAINING RING
18 - BOOT
19 - PISTON
20 - SHIMS

FIGURE 4

15. Checking and adjusting the brake valve for high limit pressure (From step 10).
    a. If test gauge pressure reads too high or too low, adjust screw (15) on brake valve (2) to arrive at 1200 PSI (See Fig. 4). The adjusting screw is accessible through access hole (16) in bracket.

       NOTE: Pressure is raised by turning screw in and lowered by turning screw out.

    b. If correct pressure is achieved return to step 11 and continue.
    c. If correct pressure cannot be achieved, shut off the engine and replace the brake valve. Return to step 7 and continue.

Refer to the following part numbers when ordering test equipment or replacement brake components.

ITEM	LULL PART NO.
Accumulator	P26017
Brake Valve	P26018
Shims .004	P27316
.007	P27317
.018	P27318
.032	P27319
Accumulator Test Gauge	P26749
Brake Line Test Gauge	24905B
Brake Line Test Tee	P27399

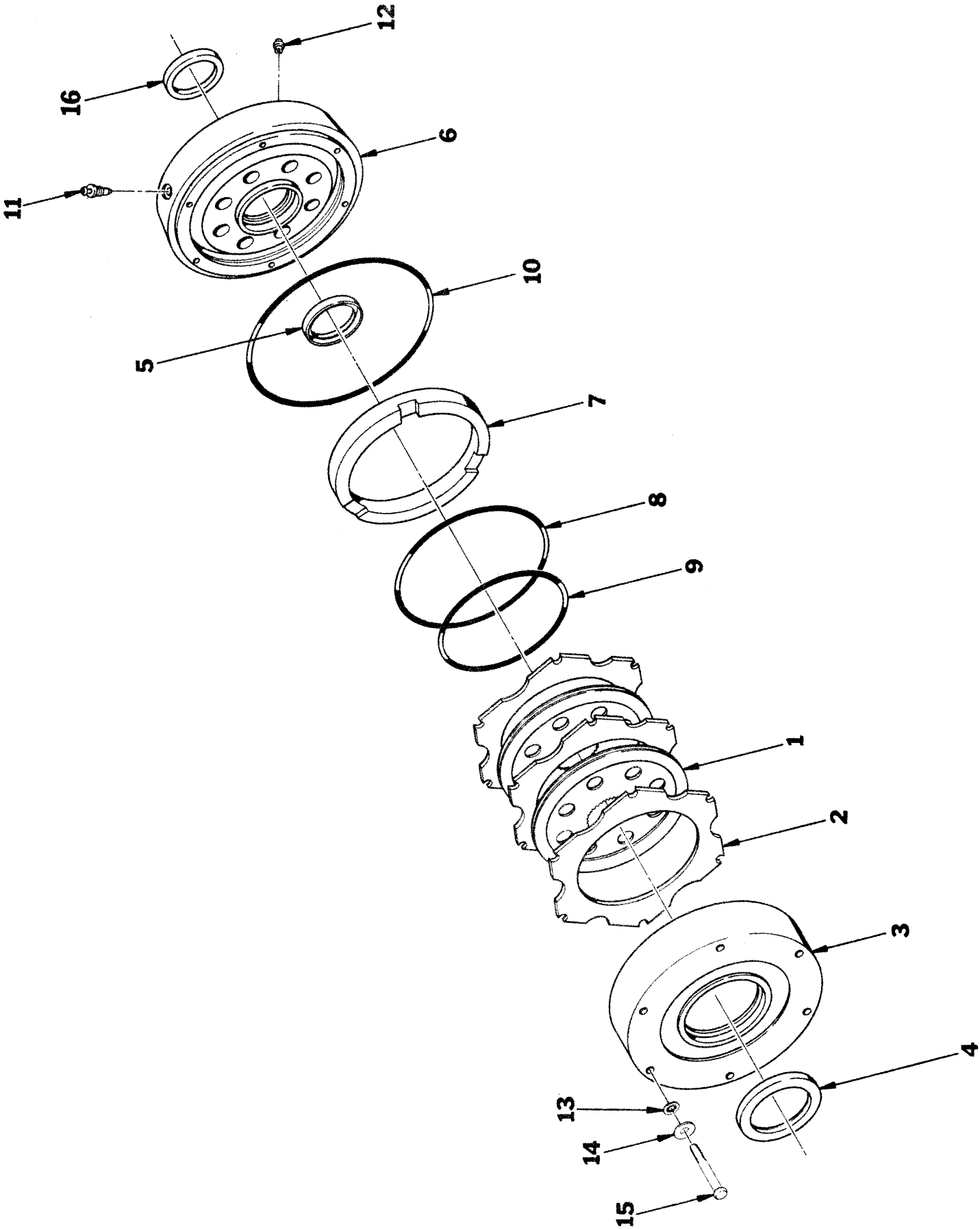

1884

644 S/N 823 Thru 1694

844 S/N 1082 Thru 1721 & 1723

ITEM	PART NO.	DESCRIPTION	QTY.
	P24888	Wet Disc Brake Assembly	
1	P24886	Disc - Rotating	2
2	P24887	Disc - Stationary	3
3	P25090	Housing	1
4	P25091	Oil Seal	1
5	P25092	Oil Seal - SPECIAL	1
6	P25093	Power Plate	1
7	P25094	Piston	1
8	P25095	O-Ring, Piston - Large	1
9	P25096	O-Ring, Piston - Small	1
10	P25097	O-Ring, Housing	1
11	P25098	Bleeder Screw	1
12	P25099	Orifice	1
13	P25089	Seal Washer	6
14	P01404	Flat Washer, 3/8"	6
15	P00238	Bolt, Hex, 3/8"-16 x 2-3/4" (Gr 8)	6
16	P26311	Oil Seal	1
REF	21494A	Seal Kit (Includes Items 4,5 & 13)	

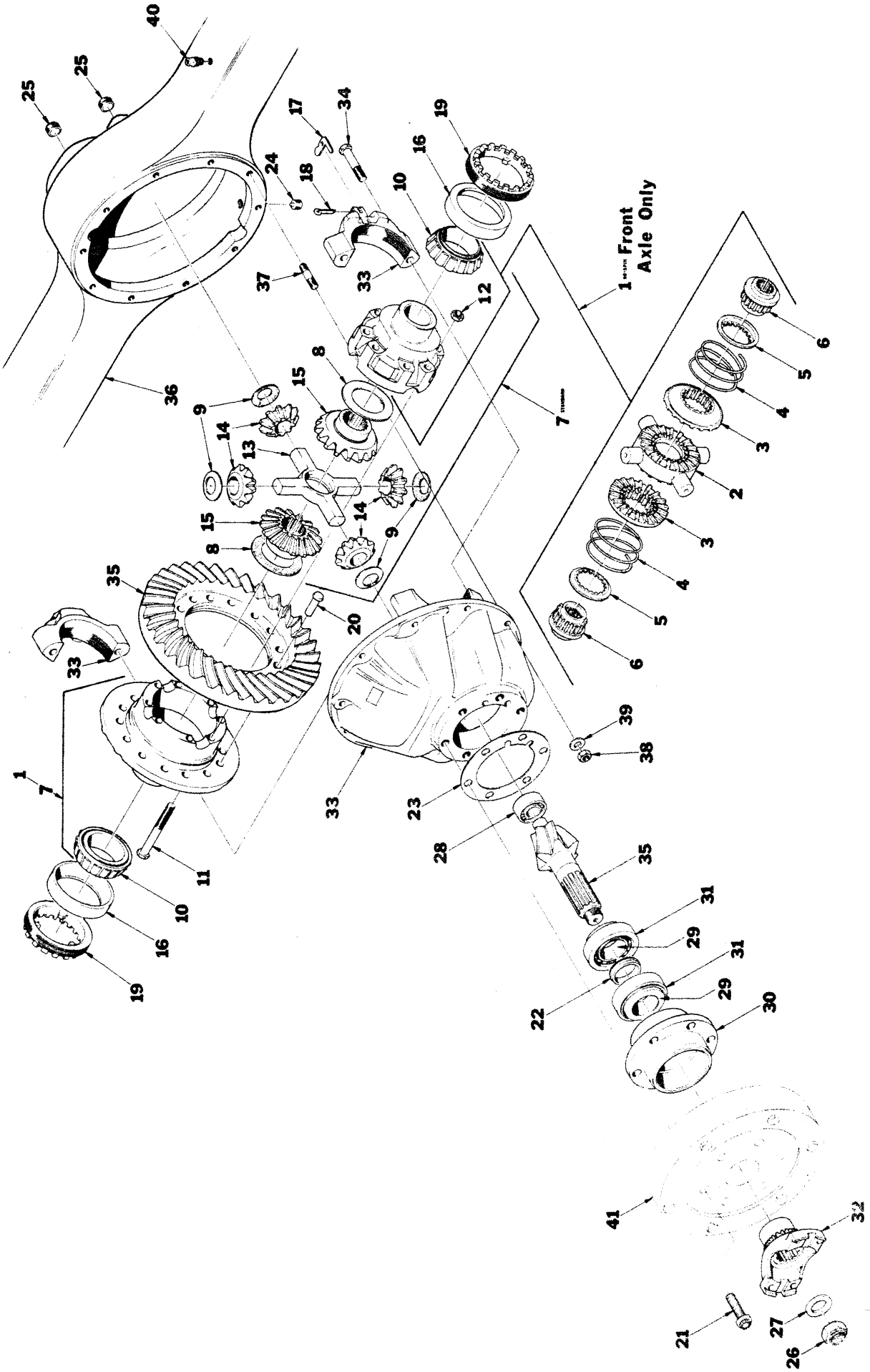
1 Front Axle Only

644 S/N 823 Thru 1694
844 S/N 1082 Thru 1721 & 1723

ITEM	PART NO.	DESCRIPTION	QTY. PER AXLE
1	P25147	Differential Ass'y, No-Spin (Incl. Items 2-6,10-12)	1
2	P25142	Spider	1
3	P25143	Clutch	2
4	P25144	Spring	2
5	P25145	Spring Retainer	2
6	P25146	Side Gear	2
7	P25136	Differential Ass'y, Standard (Incl. Items 8-15)	1
8	P24834	Thrust Washer, Differential Gear	2
9	P24837	Thrust Washer, Pin Gear	4
10	P24832	Cone Bearing	2
11	P24841	Bolt, HX, HD., 1/2-13x5.50 (G8PH)	8
12	P24839	Nut Lock, 1/2-13, (G8PH)	8
13	P24836	Spider	8
14	P24838	Gear, Pinion, Differential	4
15	P24835	Gear, Differential	2
16	P24831	Cup, Bearing	2
17	P24829	Lock, Bearing Adjuster	2
18	P24828	Pin, Cotter	2
19	P24812	Ring, Adjuster	2
20	P24869	Rivet	14
21	P19320	Bolt, HX., 9/16-12x2.50 (G8PH)	6
22	P24818	Spacer, Pinion	1
23	P25131	Shim, Pinion - .010	A/R
	P25132	Shim, Pinion - .030	A/R
	P25133	Shim, Pinion - .005	A/R
24	P13780	Drain Plug, Magnet	1
25	P19300	Plug, Square Socket, 3/4-14, Steel	2
26	P21836	Nut, Pinion	1
27	P21835	Flatwasher	1
28	P24814	Bearing, Roller	1
29	P24816	Cone, Bearing	2
30	P25141	Cap Ass'y (Incl. Item 31)	1
31	P24817	Cup, Bearing	2
32	P25140	Companion Flange	1
33	P24813	Carrier & Cap Ass'y (Incl. Item 34)	1
34	P24830	Bolt, HX. HD., 9/16-18x2.75 (G8PH)	4
35	P24815	Pin & Ring Gear (6.17)	1
36	P25138	Axle Housing (Incl. Items 37-39)	1
37	P13833	Stud, 7/16-14 & 7/16-20x2.00	6
	P25162	Stud, 7/16-14 &7/16-20x2.38	2
	P25163	Stud, 7/16-14 & 7/16-20x2.81	2
38	P24884	Locknut, 7/16-14, G8	10
39	P21813	Washer, Hardened, 7/16	10
40	P13784	Vent, Air	1
41	P24888	Wet Disc Brake Assembly (See Breakdown)	-
REF	P25124	Carrier Ass'y - No-Spin (Incl. Items 1-6, 16-23, 26-35 & 41)	
REF	P25125	Carrier Ass'y - Standard (Incl. Items 7-23, 26-35 & 41)	

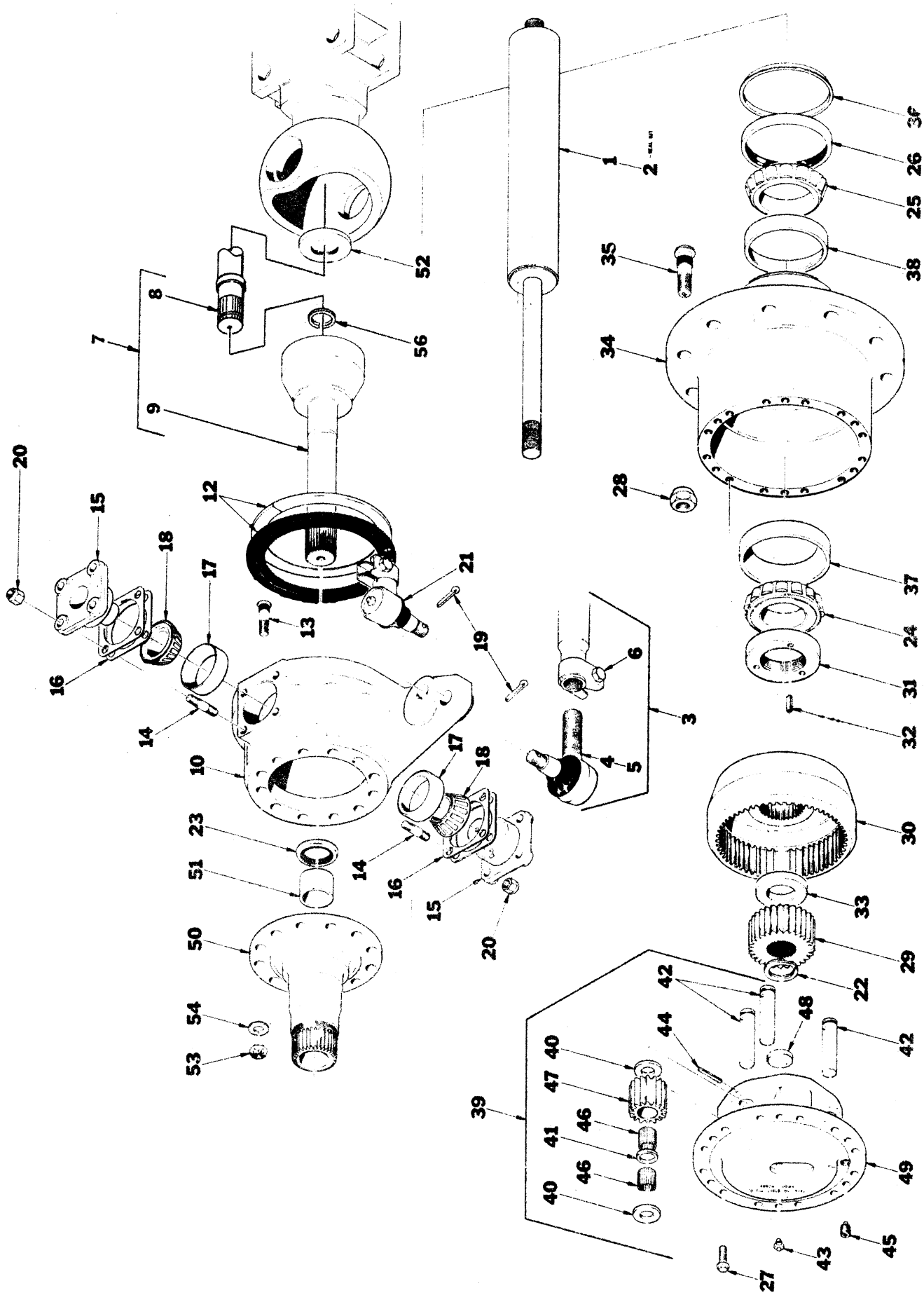
1
2
3
4
5
6
7
8
9
10
12
13
14
15
16
17
18
19
20
21
22
23
24
25
26
27
28
29
30
31
32
33
34
35
37
38
39
40
41
42
43
44
45
46
47
48
49
50
51
52
53
54
56

1886

644 S/N 823 Thru 1694
844 S/N 1082 Thru 1721 & 1723

ITEM	PART NO.	DESCRIPTION	QTY. PER AXLE
1	P21827	Steer Cylinder	2
2	P25170	Seal Kit, Steer Cylinder	REF.
3	P25155	Tie Rod Ass'y. (Incl. Items 4-6)	1
4	P10345	Tie Rod End, Fine Thread	1
5	P23263	Tie Rod End, Coarse Thread	1
6	P23264	Clamp, Tie Rod	2
7	P25134	Shaft & U-Joint Ass'y. (Incl. Item 8 & 9)	1
8	P25126	Axle Shaft, R. H. & L. H.	2
9	P25150	U-Joint Ass'y., R.H. & L.H. (Incl. Item 56)	2
10	P25152	Steering Knuckle L.H. (Incl. Items 12-14) Shown	1
11	P25153	Steering Knuckle R.H. (Incl. Items 12-14)	1
12	P25157	Seal, Oil	2
13	P25158	Stud, Spindle	24
14	P25160	Stud, Trunnion	16
15	P25151	Trunnion	4
16	P13839	Shim, .005"	A/R
	P13840	Shim, .010"	A/R
17	P25148	Cup Bearing	4
18	P25149	Cone Bearing	4
19	P13835	Pin, Cotter	6
20	P13842	Locknut	16
21	P13915	Vertical Socket	4
22	P13783	Ring Retainer	2
23	P13869	Seal, Oil	2
24	P25115	Cone, Bearing	2
25	P25116	Cone, Bearing	2
26	P25118	Seal, Oil	2
27	P25159	Bolt, Serrated	36
28	P13894	Wheel Nut	20
29	P21820	Sun Gear	2
30	P13892	Ring Gear	2
31	P21818	Locknut	2
32	P21817	Roll Pin	2
33	P13895	Spacer	2
34	P25172	Hub Ass'y. (Incl. Items 35-38)	2
35	P13888	Wheel Stud	20
36	P25139	Deflector	2
37	P25117	Cup Bearing	2
38	P25168	Cup Bearing	2
39	P25120	Drive Flange Ass'y. (Incl. Items 40-49)	2
40	P13903	Washer, Special	12
41	P13906	Spacer, Planet Gear	6
42	P19334	Pin, Planet Gear	6
43	P21821	Relief Fitting	2
44	P19335	Roll Pin	6
45	P13780	Drain Plug, Magnet	2
46	P13901	Needle Bearing	300
47	P13902	Planet Gear	6
48	P19336	Thrust Washer	2
49	P25121	Drive Flange	2
50	P25154	Spindle Ass'y. (Incl. Item 51)	2
51	P13872	Bushing	2
52	P25156	Seal, Oil	2
53	P25165	Nut, Lock	24
54	P25167	Flatwasher	24
55			
56	P25175	Retaining Ring, Axle Shaft	2

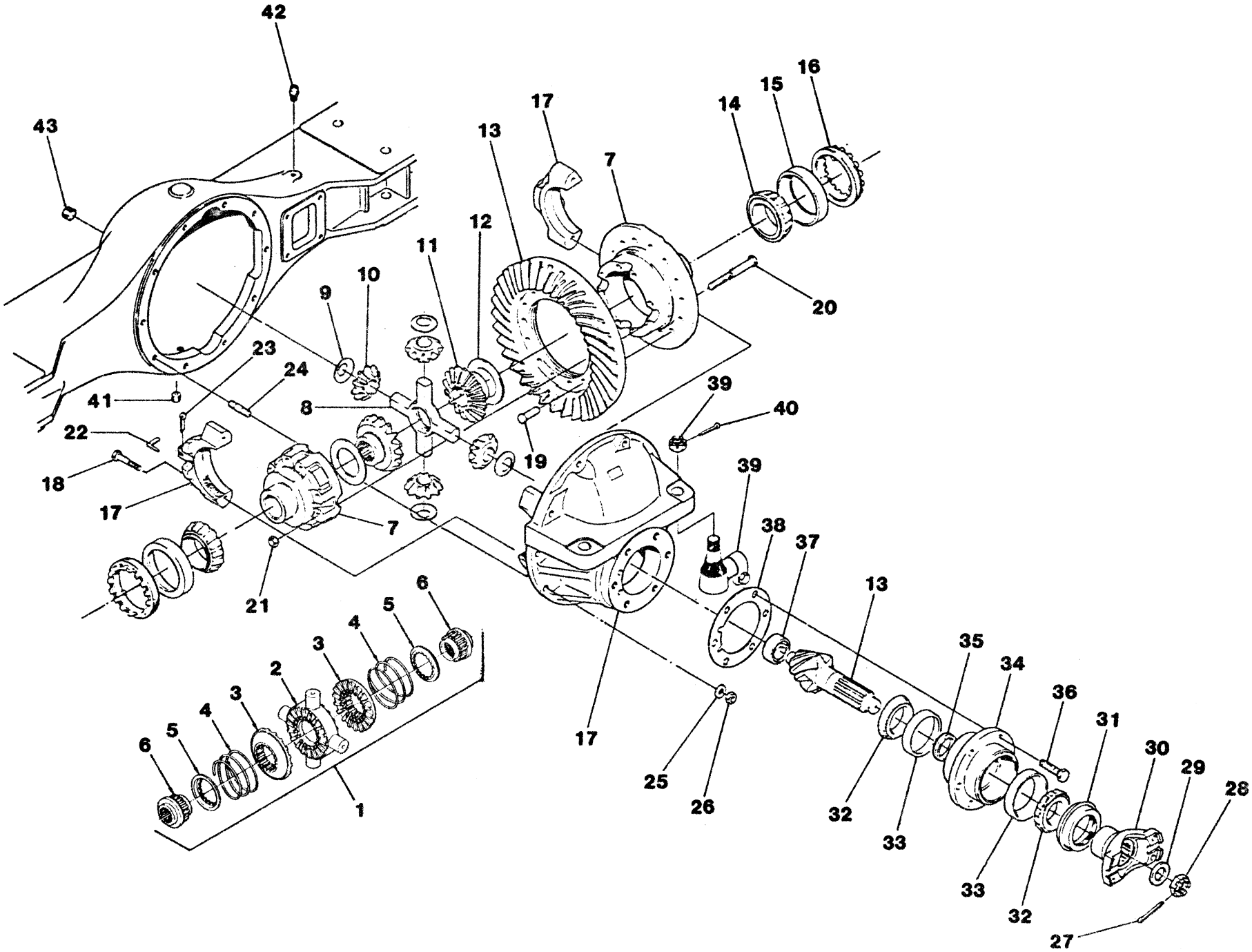
42
43
16
15
14
17
13
7
12
11
10
9
20
23
24
41
8
39
40
22
19
18
17
7
39
38
37
21
6
5
4
3
2
13
35
34
36
31
30
29
28
6
5
4
3
17
25
26
32
33
33
32
27
1

1900

644 S/N 1695 Thru
844 S/N 1722, 1724 Thru
1044 S/N 101 Thru

ITEM	PART NO.	DESCRIPTION	QUANTITY PER AXLE
1	P26157	No-Spin Differential Ass'y	1
2	P25142	Spider	1
3	P25143	Clutch Member	2
4	P25144	Spring	2
5	P25145	Spring Retainer	2
6	P25146	Side Gear	2
7	P26809	Differential Case Ass'y (W/Diff. Lock)	1
	P24840	Differential Case Ass'y	1
8	P24836	Spider	1
9	P24837	Thrustwasher, Pinion	4
10	P26800	Pinion, Differential	4
11	P26811	Gear, Differential	2
12	P24834	Thrustwasher, Gear	2
13	P26160	Ring Gear & Pinion	1
14	P24812	Adjusting Ring	2
15	P24831	Bearing Cup	2
16	P24832	Bearing Cone	2
17	P26810	Carrier Housing & Cap (Incl. Item 34)	1
18	P24830	Bolt, Hex	4
19	p24869	Rivet	14
20	P24841	Bolt, Hex	8
21	P24839	Lock Nut	8
22	P24829	Lock, Bearing Adjuster	2
23	P24828	Cotter Pin	2
24	P13833	Stud, 7/16 - 14 & 7/16 - 20 X 2.00	6
	P25162	Stud, 7/16 - 14 & 7/16 - 20 X 2.38	2
	P25163	Stud, 7/16 - 14 & 7/16 - 20 X 2.81	2
25	P21813	Flatwasher	10
26	P17537	Locknut	10
27	P13818	Cotter Pin	1
28	P24826	Nut, Pinion	1
29	P24827	Flatwasher	1
30	P26848	End Yoke	1
31	P24825	Oil Seal	1
32	P24816	Bearing Cone	2
33	P24817	Bearing Cup	2
34	P25141	Bearing Cap Retainer (Incl. Item 33)	1
35	P24818	Spacer, Pinion - STD (See Note)	1
36	P24844	Bolt, Hex	6
37	P24814	Roller Bearing	1
38	P25131	Shim, Pinion - .010"	A/R
	P25132	Shim, Pinion - .030"	A/R
	P25133	Shim, Pinion - .005"	A/R
39	P13915	Socket, Steer Cylinder (Incl. Nut)	4
40	P13835	Cotter Pin	4
41	P13780	Drain Plug, Magnetic	1
42	P13784	Vent	1
43	P19300	Pipe Plug	1

NOTE: Consult Factory

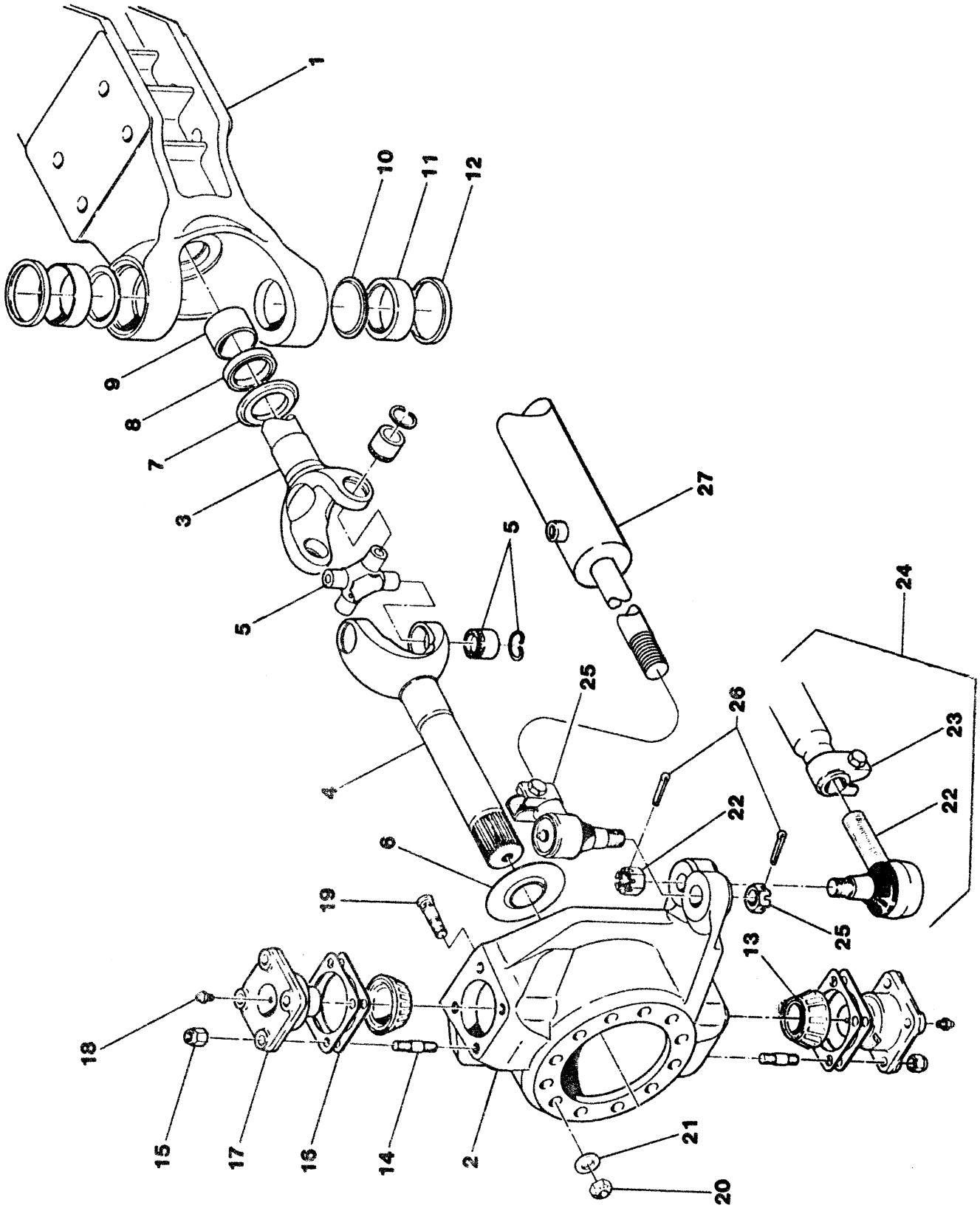
1
10
11
12
9
8
7
3
5
5
27
24
25
26
23
4
22
22
6
19
25
13
18
15
17
16
14
2
21
20

644 S/N 1695 Thru
844 S/N 1722, 1724 Thru
1044 S/N 101 Thru

ITEM	PART NO.	DESCRIPTION	QUANTITY PER AXLE
1	P26158	Axle Housing	1
	P26159	Axle Housing W/Diff. Lock	1
2	P26824	Steer Knuckle, L.H.	1
	P26836	Steer Knuckle, R.H.	1
3	P26835	Inner Yoke Shaft, L.H.	1
	P26831	Inner Yoke Shaft, R.H.	1
4	P26817	Outer Yoke Shaft	2
5	P26175	U-Joint	2
6	P26846	Dust Slinger, Outer	2
7	P26847	Dust Slinger, Inner	2
8	P25156	Oil Seal	2
9	P26844	Bushing	2
10	P26802	Grease Retainer	4
11	P25148	Bearing Cup	4
12	P26801	Seal, King Pin	4
13	P25149	Bearing Cone	4
14	P25160	Stud, King Pin	16
15	P13842	Locknut	16
16	P13839	Shim - .005"	A/R
	P13840	Shim - .010"	A/R
17	P26804	Cap, King Pin	4
18	P13786	Grease Zerk	4
19	P25158	Stud, Spindle	24
20	P25165	Locknut	24
21	P25167	Flatwasher	24
22	P26190	Tie Rod End, 1.125 - 12 THD (Incl. Nut)	1
	P26191	Tie Rod End, 1.125 - 16 THD (Incl. Nut)	1
23	P26193	Clamp, Tie Rod	2
24	P26843	Tie Rod Ass'y (Incl. Items 22 & 23)	1
25	P13915	Socket, Steer Cylinder (Incl. Nut)	4
26	P13835	Cotter Pin	6
27	P26162	Steer Cylinder	2
	P26161	Steer Cylinder-Model 1044 Only	2
REF	P25170	Seal Kit, Steer Cylinder	

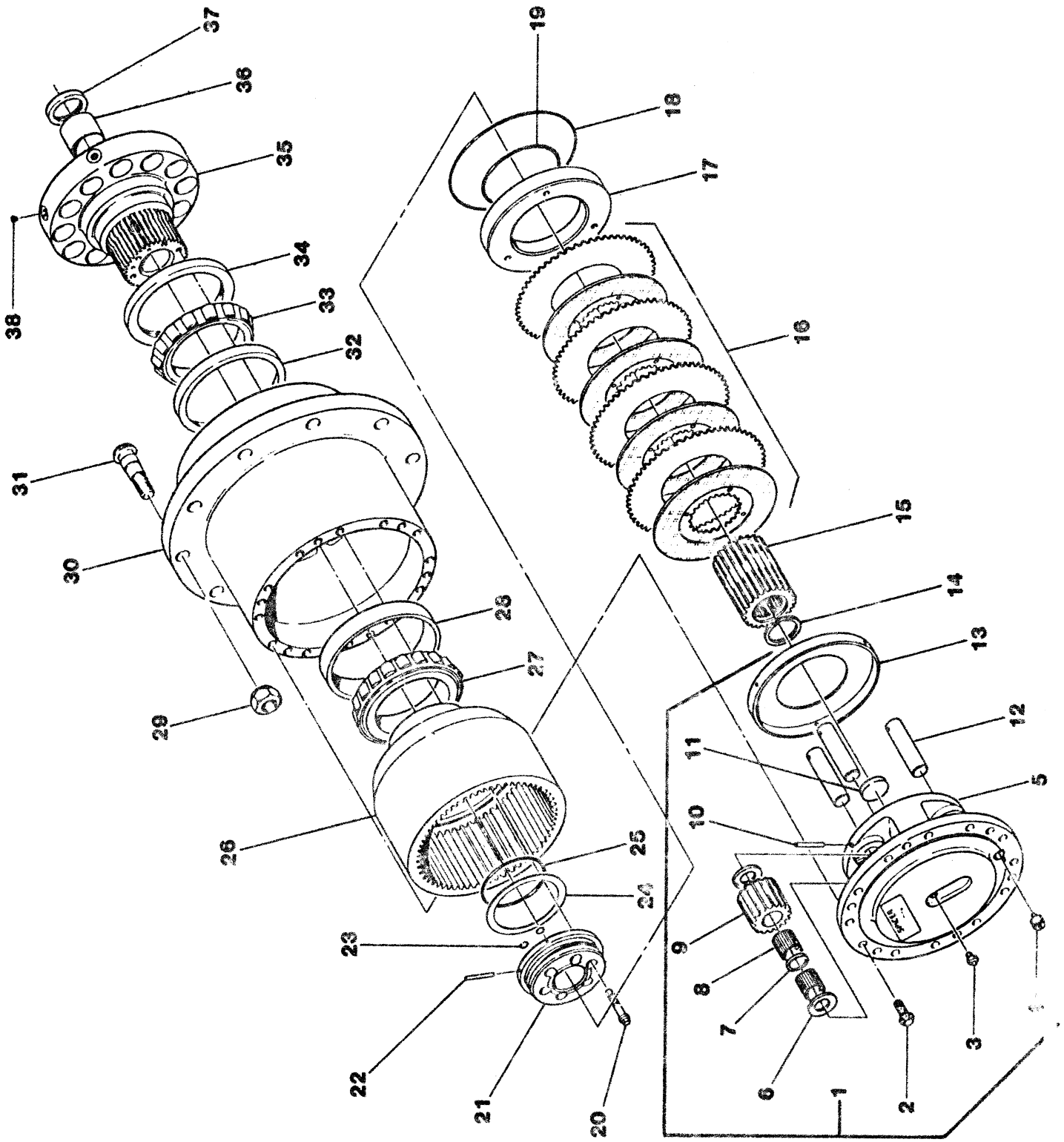
37
36
35
38
34
33
32
31
30
29
28
27
26
25
24
23
22
21
20
19
18
17
16
15
14
13
12
11
10
9
8
7
6
5
3
2
1

644 S/N 1695 Thru
844 S/N 1722, 1724 Thru
1044 S/N 101 Thru

ITEM	PART NO.	DESCRIPTION	QUANTITY PER AXLE
1	P26155	Planetary Gear Ass'y (Incl. Items 2-12)	2
2	P25159	Bolt, Hx. Self Locking	36
3	P21821	Vent	2
4	P13780	Drain Plug, Magnetic	2
5	P26830	Drive Flange	2
6	P13903	Keyed Washer	12
7	P13906	Washer, Bearing	6
8	P13901	Roller Bearing, Needle	300
9	P26812	Gear, Spur Planet	6
10	P26829	Roll Pin	6
11	P19336	Washer, Drive Flange	2
12	P26840	Shaft, Planet Gear	6
13	P26845	Plate, Lining Stop	2
14	P13783	Snap Ring	2
15	P26827	Gear, Spur	2
16	P26807	Disc Replacement Kit	2
17	P26825	Piston	2
18	P26828	O-Ring, Large	2
19	P26834	O-Ring, Small	2
20	P26821	Cap Screw, 12 Pt.	12
21	P26839	Retainer, Bearing	2
22	P26816	Tubing, Brake	2
23	P26838	O-Ring	4
24	P26871	Shim - .002"	A/R
	P26872	Shim - .005"	A/R
	P26873	Shim - .010"	A/R
	P26874	Shim - .020"	A/R
	P26875	Shim - .030"	A/R
25	P26841	O-Ring	2
26	P26813	Planetary Ring Gear	2
27	P26179	Bearing Cone, Outer	2
28	P26178	Bearing Cup, Outer	2
29	P13894	Lug Nut	20
30	P26156	Planetary Hub (Incl. Items 31-33)	2
31	P13888	Wheel Stud	20
32	P26176	Bearing Cup, Inner	2
33	P26177	Bearing Cone, Inner	2
34	P26820	Oil Seal	2
35	P26842	Spindle (Incl. Items 36 & 38)	2
36	P13872	Bushing	2
37	P13869	Oil Seal	2
38	P26826	Seat, Insert	4
39	P25111	Bleeder (Not Shown)	2
REF	P26808	O-Ring Kit (Incl. Item 18, 19, 23 & 25)	

An Oshkosh Corporation Company

JLG Industries, Inc.
1 JLG Drive
McConnellsburg PA. 17233-9533
USA
Phone: +1-717-485-5161
Customer Support Toll Free: 1-877-554-5438
Fax: +1-717-485-6417

JLG Worldwide Locations

JLG Industries (Australia)
P.O. Box 5119
11 Bolwarra Road
Port Macquarie
N.S.W. 2444
Australia
Phone: +61 265 811 111
Fax: +61 265 810 122

JLG Latino Americana Ltda.
Rua Eng. Carlos Stevenson,
80-Suite 71
13092-310 Campinas-SP
Brazil
Phone: +55 193 295 0407
Fax: +55 193 295 1025

JLG Industries (UK) Ltd
Bentley House
Bentley Avenue
Middleton
Greater Manchester
M24 2GP
England
Phone: +44 (0)161 654 1000
Fax: +44 (0)161 654 1001

JLG France SAS
Z.I. de Baulieu
47400 Fauillet
France
Phone: +33 (0)5 53 88 31 70
Fax: +33 (0)5 53 88 31 79

JLG Deutschland GmbH
Max-Planck-Str. 21
D - 27721 Ritterhude-Ihlpohl
Germany
Phone: +49 (0)421 69 350 20
Fax: +49 (0)421 69 350 45

JLG Equipment Services Ltd.
Rm 1107 Landmark North
39 Lung Sum Avenue
Sheung Shui N.T.
Hong Kong
Phone: +852 2639 5783
Fax: +852 2639 5797

JLG Industries (Italia) s.r.l.
Via Po. 22
20010 Pregnana Milanese - MI
Italy
Phone: +39 029 359 5210
Fax: +39 029 359 5845

JLG Europe B.V.
Polaris Avenue 63
2132 JH Hoofddorp
The Netherlands
Phone: +31 (0)23 565 5665
Fax: +31 (0)23 557 2493

JLG Polska
Ul. Krolewska
00-060 Warsawa
Poland
Phone: +48 (0)914 320 245
Fax: +48 (0)914 358 200

JLG Industries (Scotland)
Wright Business Centre
1 Lonmay Road
Queenslie, Glasgow G33 4EL
Scotland
Phone: +44 (0)141 781 6700
Fax: +44 (0)141 773 1907

Plataformas Elevadoras
JLG Iberica, S.L.
Trapadella, 2
P.I. Castellbisbal Sur
08755Castellbisbal, Barcelona
Spain
Phone: +34 93 772 4 700
Fax: +34 93 771 1762

JLG Sverige AB
Enkopingsvagen 150
Box 704
SE - 176 27 Jarfalla
Sweden
Phone: +46 (0)850 659 500
Fax: +46 (0)850 659 534